the smart electrohydraulics

INDUSTRIAL
ELECTROHYDRAULICS

MASTER CATALOG

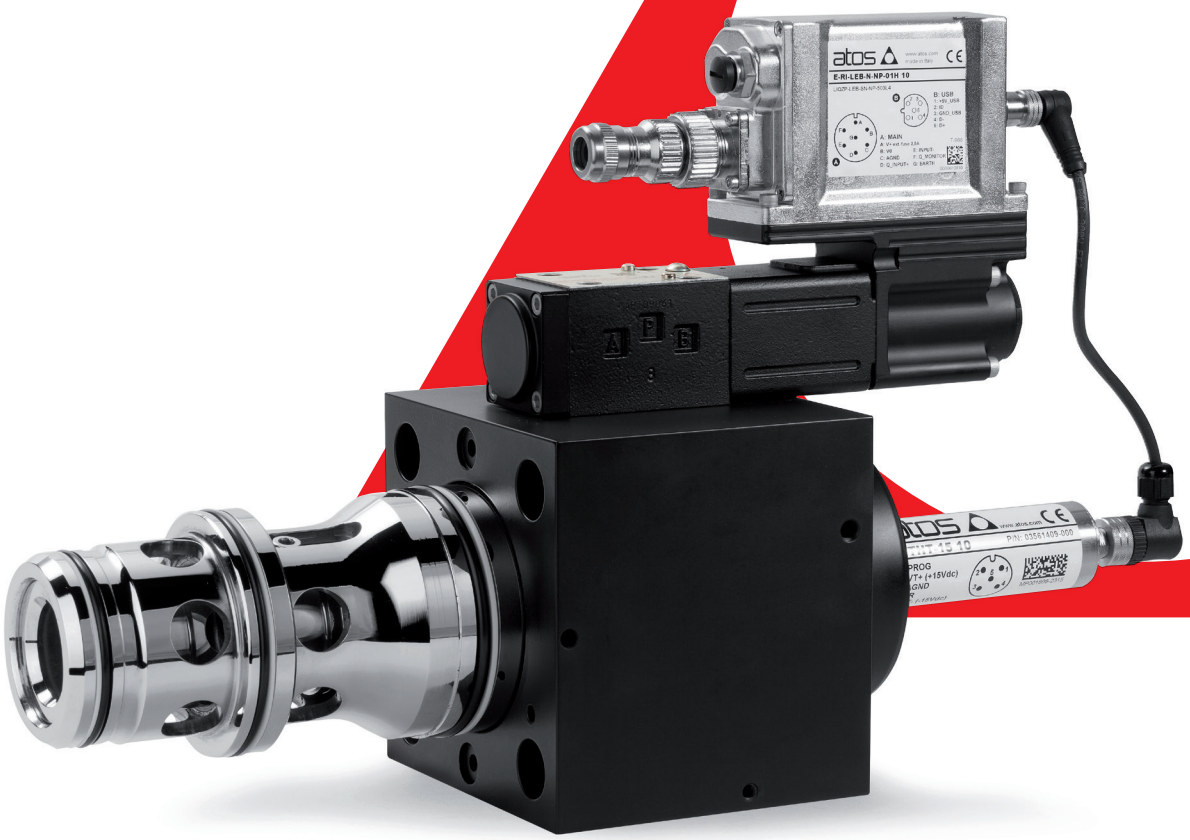

the smart electrohydraulics

First class facilities
high level of automation
with in-line process control

Know-how
from the design to the production
of the finished product

Full product range
standard, customized, ex-proof,
stainless steel, safety certified

Advanced technology
thanks to long lasting
investments in R&D

Quality first
according to ISO 9001, including
automotive sector methods

Sales & service
worldwide network of experienced
engineers, oriented to customer care

Professional team
to quickly meet every
customer need

GENERAL INDEX

1 PROPORTIONAL VALVES

2 AXIS & p/Q CONTROLS

3 ON-OFF VALVES

4 ACCESSORIES

5 GENERAL INFORMATION

PUMPS, see KTP catalog • **CYLINDERS**, see **KTC** catalog • **FILTERS**, see **KTF** catalog

1 PROPORTIONAL VALVES

INDEX

PROPORTIONAL VALVES

TECHNICAL INFORMATION		Size	Qmax [l/min]	Table	Pag
Basics for digital proportionals electrohydraulics				FS001	930
Basics for safety components				Y010	936
Programming tools for valve drivers & axis controls				GS500	941
Fieldbus features				GS510	949
IO-Link features				GS520	956
Mounting surfaces for electrohydraulic valves				P005	958
Mounting surfaces and cavities for cartridge valves				P006	962
SERVOPROPORTIONAL DIRECTIONALS					
zero overlap with LVDT transducer					
DLHZO-TEB/TES DLKZOR-TEB/TES	direct, sleeve execution, on-board driver	06 ÷ 10	70 ÷ 130	FS180	8
DLHZO-T, DLKZOR-T	direct, sleeve execution, off-board driver	06 ÷ 10	70 ÷ 130	F180	22
DHZO-TEB/TES DKZOR-TEB/TES	direct, on-board driver	06 ÷ 10	80 ÷ 180	FS168	28
DHZO-T, DKZOR-T	direct, off-board driver	06 ÷ 10	80 ÷ 180	F168	42
DPZO-LEB/LES	piloted, on-board driver, 2 LVDT transducers	10 ÷ 35	180 ÷ 3500	FS178	47
DPZO-L	piloted, off-board driver, 2 LVDT transducers	10 ÷ 32	180 ÷ 1600	F178	64
LIQZP-LEB/LES	3 way cartridge, piloted, on-board driver, 2 LVDT transducers	25 ÷ 80	500 ÷ 5000	FS340	72
LIQZP-L	3 way cartridge, piloted, off-board driver, 2 LVDT transducers	25 ÷ 80	500 ÷ 5000	F340	88
HIGH PERFORMANCE DIRECTIONALS					
positive overlap with LVDT transducer					
DHZO-TEB/TES DKZOR-TEB/TES	direct, on-board driver	06 ÷ 10	80 ÷ 180	FS165	95
DHZE-TID, DKZE-TID	direct, on-board driver	06 ÷ 10	80 ÷ 180	FS155	110
DHZO-T, DKZOR-T	direct, off-board driver	06 ÷ 10	80 ÷ 180	F165	118
DPZO-LEB/LES	piloted, on-board driver, 2 LVDT transducers	10 ÷ 35	180 ÷ 3500	FS175	124
DPZO-L	piloted, off-board driver, 2 LVDT transducers	10 ÷ 32	180 ÷ 1600	F175	144
DPZO-TEB/TES	piloted, on-board driver, 1 LVDT transducer	10 ÷ 32	180 ÷ 1600	FS172	154
DPZE-TID	piloted, on-board driver, 1 LVDT transducer	16 ÷ 32	400 ÷ 1600	FS158	170
DPZO-T	piloted, off-board driver, 1 LVDT transducer	10 ÷ 32	180 ÷ 1600	F172	180
LIQZP-LEB/LES	2 way ISO cartridge, piloted, on-board driver, 2 LVDT transducers	16 ÷ 125	600 ÷ 22000	FS330	188
LIQZP-L	2 way ISO cartridge, piloted, off-board driver, 2 LVDT transducers	16 ÷ 125	600 ÷ 22000	F330	205
LIQZH-LEB/LES	high response 2 way ISO cartridge, piloted, on-board driver, 2 LVDT transducers	32 ÷ 100	1800 ÷ 16000	FS335	213
DIRECTIONAL VALVES					
positive overlap without transducer					
DHZO-A/AEB/AES DKZOR-A/AEB/AES	direct, off-board or on-board driver	06 ÷ 10	70 ÷ 160	FS160	228
DHZE-A, DKZE-A	direct, off-board driver	06 ÷ 10	65 ÷ 130	F150	243
DPZO-A/AEB/AES	piloted, off-board or on-board driver	10 ÷ 32	180 ÷ 1500	FS170	249
DPZE-A	piloted, off-board driver	10 ÷ 32	180 ÷ 1500	F171	267

		Size	Qmax [l/min]	Table	Pag
SAFETY PROPORTIONALS					
IEC 61508 & ISO 13849, on-board driver with on-off signals /K					
DLHZO-TES, DLKZOR-TES	direct, zero overlap, sleeve execution, LVDT transducer	06 ÷ 10	70 ÷ 130		
DHZO-TES, DKZOR-TES	direct, positive or zero overlap, LVDT transducer	06 ÷ 10	80 ÷ 180	FY200	276
DPZO-TES, DPZO-LES	piloted, positive or zero overlap, 1 or 2 LVDT transducers	10 ÷ 35	180 ÷ 3500		
IEC 61508 & ISO 13849, on-board driver with double power supply /U					
DLHZO-TES, DLKZOR-TES	direct, zero overlap, sleeve execution, LVDT transducer	06 ÷ 10	70 ÷ 130		
DHZO-TES, DKZOR-TES	direct, positive or zero overlap, LVDT transducer	06 ÷ 10	80 ÷ 180	FY100	284
DPZO-TES, DPZO-LES	piloted, positive or zero overlap, 1 or 2 LVDT transducers	10 ÷ 35	180 ÷ 3500		
HIGH PERFORMANCE PRESSURE VALVES					
with pressure transducer					
RZMO-R/REB/RES-010	relief, direct, off-board or on-board driver	06	4	FS010	290
RZMO-R/REB/RES-030	relief, piloted, off-board or on-board driver	06	40	FS067	300
AGMZO-R/REB/RES	relief, piloted, off-board or on-board driver	10 ÷ 32	200 ÷ 600	FS040	310
RZGO-R/REB/RES-010	reducing, direct, off-board or on-board driver	06	12	FS020	322
RZGO-R/REB/RES-033	reducing, piloted, off-board or on-board driver	06	40	FS075	332
AGRCZO-R/REB/RES	reducing, piloted, off-board or on-board driver	10 ÷ 20	160 ÷ 300	FS055	342
ISO cartridges, with pressure transducer					
LIMZO-R/REB/RES	relief, piloted, off-board or on-board driver	16 ÷ 80	200 ÷ 4500		
LIRZO-R/REB/RES	reducing, piloted, off-board or on-board driver	16 ÷ 40	160 ÷ 800	FS305	355
LICZO-R/REB/RES	compensator, piloted, off-board or on-board driver	16 ÷ 50	200 ÷ 2000		
PRESSURE VALVES					
without transducer					
RZMO-A/AEB/AES-010	relief, direct, off-board or on-board driver	06	4	FS007	369
RZME-A	relief, direct, off-board driver, subplate	06	4	F005	379
CART RZME-A	relief, direct, off-board driver, screw-in cartridge	M20			
RZMO-A/AEB/AES-030	relief, piloted, off-board or on-board driver	06	40	FS065	385
HZMO-A	relief, piloted, off-board driver, modular				
AGMZO-A/AEB/AES	relief, piloted, off-board or on-board driver	10 ÷ 32	200 ÷ 600	FS035	396
AGMZE-A	relief, piloted, off-board driver	10 ÷ 32	200 ÷ 600	F030	408
RZGO-A/AEB/AES-010	reducing, direct, off-board or on-board driver	06	12	FS015	413
RZGE-A	reducing, direct, off-board driver, subplate	06	12	F012	423
CART RZGE-A	reducing, direct, off-board driver, screw-in cartridge	M20			
RZGO-A/AEB/AES-033	reducing, piloted, off-board or on-board driver	06 ÷ 10	40 ÷ 100	FS070	429
HZGO-A, KZGO-A	reducing, piloted, off-board driver, modular				
AGRCZO-A/AEB/AES	reducing, piloted, off-board or on-board driver	10 ÷ 20	160 ÷ 300	FS050	441
ISO cartridges, without transducer					
LIMZO-A/AEB/AES	relief, piloted, off-board or on-board driver	16 ÷ 80	200 ÷ 4500		
LIRZO-A/AEB/AES	reducing, piloted, off-board or on-board driver	16 ÷ 40	160 ÷ 800	FS300	453
LICZO-A/AEB/AES	compensator, piloted, off-board or on-board driver	16 ÷ 50	200 ÷ 2000		
for pilot lines, without transducer					
DHRZO-A/AEB/AES	3 way reducing, direct, off-board or on-board driver	06	24	FS025	468
DHRZE-A	3 way reducing, direct, off-board driver	06	24	F022	478

NEXT

		Size	Qmax [l/min]	Table	Pag
FLOW VALVES					
pressure compensated					
QVHZO-TEB/TES QVKZOR-TEB/TES	direct, on-board driver, LVDT transducer	06 ÷ 10	45 ÷ 90	FS412	482
QVHZO-T, QVKZOR-T	direct, off-board driver, LVDT transducer	06 ÷ 10	45 ÷ 90	F412	492
QVHZO-A/AEB/AES QVKZOR-A/AEB/AES	direct, off-board or on-board driver, without transducer	06 ÷ 10	45 ÷ 90	FS410	498
QVHZE-A/QVKZE-A	direct, off-board driver, without transducer	06 ÷ 10	45 ÷ 90	F400	512
ELECTRONIC DRIVERS					
off-board digital, DIN-rail EN 60715					
E-BM-TES, E-BM-LES	for directional and flow valves with LVDT transducers, fieldbus, p/Q control			GS240	520
E-BM-TEB, E-BM-LEB	for directional and flow valves with LVDT transducers			GS230	528
E-BM-RES	for pressure valves with transducer, fieldbus			GS203	534
E-BM-AES	for valves without transducer, fieldbus			GS050	540
E-BM-AS	for valves without transducer			G030	546
on-board, solenoid plug-in DIN 43650					
E-MI-AS-IR	digital, for valves without transducer			G020	552
E-MI-AC	analog, for valves without transducer			G010	556
ACCESSORIES					
E-ATR-8	pressure transducer with amplified analog output signal			GS465	912
BA	single station subplates, mounting surfaces ISO 4401, 6264 and 5781			K280	918
HAND LEVERS	for on-off and proportional valves			E138	922
HANDWHEELS & KNOBS	for on-off and proportional valves			K150	924
CONNECTORS	for transducers, pumps, on-off and proportional valves			K800	926
OPERATING INFORMATION					
Operating and maintenance information for proportional valves				FS900	968

Supplementary components range available on **www.atos.com**

Digital servoproportional directional valves sleeve execution

direct, with on-board driver, LVDT transducer and zero spool overlap with fail safe

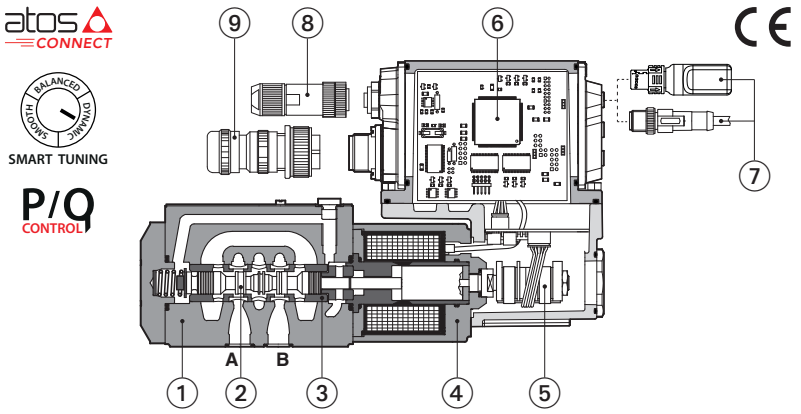

DLKZOR-TES-SN-BC-160

① Valve body
② Spool
③ Sleeve
④ Proportional solenoid
⑤ LVDT transducer
⑥ On-board digital driver
⑦ Bluetooth/USB connection
⑧ Fieldbus connector
⑨ Main connector

DLHZO-TEB, DLHZO-TES DLKZOR-TEB, DLKZOR-TES

Digital servoproportional directional valves, direct, in sleeve execution with LVDT position transducer and zero spool overlap for best performances in any position closed loop control.

TEB basic execution with analog reference signal or IO-Link interface for digital reference signals, valve settings, and real-time diagnostics.

TES full execution which includes also optional alternated p/Q controls and fieldbus interfaces for digital reference signals, valve settings, and real-time diagnostics.

Bluetooth/USB connection is always present for valve settings via mobile App and Atos PC software.

Digital TEZ version (see tech. table FS610) integrates on-board driver and axis card, while TEB-SN-NP and TES versions can be used in combination with Z-BM-KZ off-board axis card (see tech. table GS340).

DLHZO:	**DLKZOR**:
Size: **06** - ISO 4401	Size: **10** - ISO 4401
Max flow: **70 l/min**	Max flow: **130 l/min**
Max pressure: **350 bar**	Max pressure: **315 bar**

1 MODEL CODE

DLHZO - TES - SN - NP - 0 40 - L 7 3 / * / * / * * / *

DLHZO = size 06
DLKZOR = size 10

TEB = basic on-board digital driver
TES = full on-board digital driver

Alternated p/Q controls, see section 8 :
SN = none
Only for TES:
SP = pressure control (1 pressure transducer)
SF = force control (2 pressure transducers)
SL = force control (1 load cell)

IO-Link interface, only for TEB, see section 6 :
NP = Not present **IL** = IO-Link

Fieldbus interfaces, only for TES, see section 7 :
NP = Not present
BC = CANopen **EW** = POWERLINK
BP = PROFIBUS DP **EI** = EtherNet/IP
EH = EtherCAT **EP** = PROFINET RT/IRT

Valve size ISO 4401: **0** = 06 **1** = 10

Configuration:

40 = with fail safe configuration 1 or 3

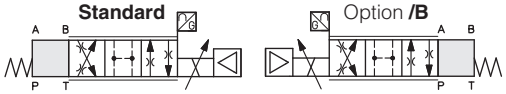

60 = without fail safe

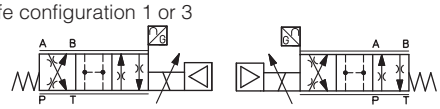

Spool type, regulating characteristics, see section 15 :
L = linear **V** = progressive **T** = not linear **(1)**

D = differential-linear **(1)**
P-A = Q, B-T = Q/2
P-B = Q/2, A-T = Q

DT = differential-not linear **(1)**
P-A = Q, B-T = Q/2
P-B = Q/2, A-T = Q

(1) Only for configuration **40**

Series number

Seals material, see section 14 :
- = NBR
PE = FKM
BT = NBR low temperature

Safety options TÜV certified - only for TES **(2)**:
U = safe double power supply
K = safe on/off signals
See section 10

SAFETY CERTIFIED

Bluetooth option (2), see section 4 :
T = Bluetooth adapter supplied with the valve

Hydraulic options (2):
B = solenoid with on-board digital driver and LVDT transducer at side of port A
Y = external drain

Electronic options (2), not available for TEB-SN-IL:
C = current feedback for pressure transducer 4÷20mA (only for TES-SP, SF, SL)
F = fault signal
I = current reference input and monitor 4÷20mA
Q = enable signal
Z = double power supply (only for TES), enable, fault and monitor signals - 12 pin connector

Fail safe configuration, see section 16 :

1 =

3 =

Note: select **1** for configuration **60** even without fail safe

Spool size:	**0**(L)	**1**(L)	**1**(V)	**3**(L)	**3**(T)	**3**(V)	**5**(L,T)	**7**(L,T,V,D,DT)
DLHZO =	4	7	12	14	-	20	28	40
DLKZOR =	-	-	-	60	60	-	-	100

Nominal flow (l/min) at Δp 70bar P-T (see section 12)

(2) For possible combined options, see section 19

2 GENERAL NOTES

Atos digital proportionals valves are CE marked according to the applicable directives (e.g. Immunity and Emission EMC Directive).
Installation, wirings and start-up procedures must be performed according to the general prescriptions shown in tech table **FS900** and in the user manuals included in the E-SW-SETUP programming software.

3 VALVE SETTINGS AND PROGRAMMING TOOLS - see tech. table GS500

3.1 Atos CONNECT mobile App

Free downloadable App for smartphones and tablets which allows quick access to valve main functional parameters and basic diagnostic information via Bluetooth, thus avoiding physical cable connection and significantly reducing commissioning time.
Atos CONNECT supports Atos digital valve drivers equipped with E-A-BTH adapter or with built-in Bluetooth. It does not support valves with p/Q control or axis controls.

Download on the App Store

GET IT ON Google Play

Bluetooth or USB connection

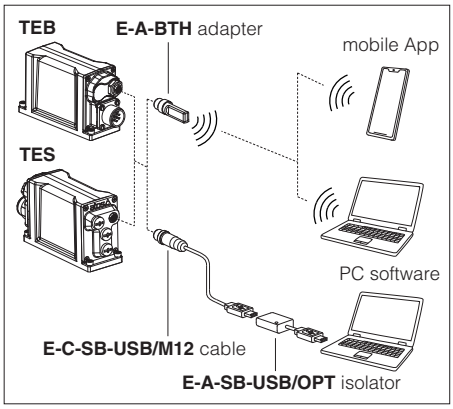

3.2 E-SW-SETUP PC software

Free downloadable software for PC allows to set all valve functional parameters and to access complete diagnostic information of digital valve drivers via Bluetooth/USB service port.
Atos E-SW-SETUP PC software supports all Atos digital valve drivers and it is available at www.atos.com in MyAtos area.

WARNING: drivers USB port is not isolated! For E-C-SB-USB/M12 cable, the use of E-A-SB-USB/OPT isolator adapter is highly recommended for PC protection

4 BLUETOOTH OPTION - see tech. table GS500

T option adds Bluetooth® connectivity to Atos valve drivers thanks to E-A-BTH adapter, which can be left permanently installed on-board, to allow the Bluetooth connection with the valve drivers at any time. E-A-BTH adapter can also be purchased separately and used to connect with any supported Atos digital product.
Bluetooth connection to the valve can be protected against unauthorised access by setting a personal password. The adapter leds visually indicates the status of valve driver and Bluetooth connection.

WARNING: for the list of countries where the Bluetooth adapter has been approved, see tech. table **GS500**
T option is not available for the Indian market, so the Bluetooth adapter must be ordered separately.

5 SMART TUNING

Smart tuning allows to adjust the valve dynamic response in order to match different performance requirements.

The valve is provided with 3 factory settings for the spool control:
- **dynamic** fast response time and high sensitivity for best dynamic performances. Default factory setting for directional valves
- **balanced** average response time and sensitivity suitable for major applications
- **smooth** attenuated response time and sensitivity to improve control stability in critical applications or in environments with electrical disturbances

Smart tuning setting can be switched from Dynamic (default) to Balanced or Smooth via software or fieldbus; if requested, performances can be further customized directly tuning each single control parameter. For details consult related manuals E-MAN-RI-* and Quickstart, see section 27.

For Response time and Bode diagrams see section 15.

6 IO-LINK - only for TEB, see tech. table GS520

IO-Link allows low cost digital communication between the valve and machine central unit. The valve is directly connected to a port of an IO-Link master (point-to-point connection) via low-cost unshielded cables for digital reference, diagnostic and settings. The IO-Link master works as a hub exchanging this information with the machine central unit via fieldbus.

7 FIELDBUS - only for TES, see tech. table GS510

Fieldbus allows valve direct communication with machine control unit for digital reference, valve diagnostics and settings. These execution allow to operate the valves through fieldbus or analog signals available on the main connector.

8 ALTERNATED p/Q CONTROLS - only for TES, see tech. table FS500

S* options add the closed loop control of pressure (**SP**) or force (**SF** and **SL**) to the basic functions of proportional directional valves flow regulation. A dedicated algorithm alternates pressure (force) depending on the actual hydraulic system conditions.
An additional connector is available for transducers to be interfaced to the valve's driver (1 pressure transducer for SP, 2 pressure transducers for SF or 1 load cell for SL). The alternated pressure control (SP) is possible only for specific installation conditions.
Main 12 pin connector is the same as /Z option plus two analog signals specific for the pressure (force) control.

9 AXIS CONTROLLER - see tech. table FS610

Digital servoproportional with on-board electronics **TEZ** include valve's driver plus axis controller, performing position closed loop of any hydraulic actuator equipped with analog, encoder or SSI position transducer. S* option add alternated p/Q control to the basic position ones.
Atos also supplies complete servoactuators integrating servocylinder, digital servoproportional valve and axis controller, fully assembled and tested. For more information consult Atos Technical Office.

10 SAFETY OPTIONS - only for TES

Atos range of proportional directional valves, provides functional safety options **/U** and **/K** , designed to accomplish a safety function, intended to reduce the risk in process control systems.

SAFETY CERTIFIED

They are **TÜV certified** in compliance to **IEC 61508 up to SIL 3 and ISO 13849 up to category 4, PL e**

Safe double power supply, option **/U**: the driver has separate power supplies for logic and solenoids. The safe condition is reached by cutting the electrical supply to solenoids, while electronics remains active for monitoring functions and fieldbus communication, see tech table **FY100**

Safety function via on/off signals, option **/K**: upon a disable command, the driver checks the spool position and it provides an on/off acknowledgement signal only when the valve is in safe condition, see tech table **FY200**

11 GENERAL CHARACTERISTICS

Assembly position	Any position
Subplate surface finishing to ISO 4401	Acceptable roughness index: Ra ≤0,8, recommended Ra 0,4 – Flatness ratio 0,01/100
MTTFd valves according to EN ISO 13849	150 years, for further details see technical table P007
Ambient temperature range	**Standard** = -20°C ÷ +60°C **/PE** option = -20°C ÷ +60°C **/BT** option = -40°C ÷ +60°C
Storage temperature range	**Standard** = -20°C ÷ +70°C **/PE** option = -20°C ÷ +70°C **/BT** option = -40°C ÷ +70°C
Surface protection	Zinc coating with black passivation, galvanic treatment (driver housing)
Corrosion resistance	Salt spray test (EN ISO 9227) > 200 h
Vibration resistance	See technical table G004
Compliance	CE according to EMC directive 2014/30/EU (Immunity: EN 61000-6-2; Emission: EN 61000-6-3) RoHS Directive 2011/65/EU as last update by 2015/863/EU REACH Regulation (EC) n°1907/2006

12 HYDRAULIC CHARACTERISTICS - based on mineral oil ISO VG 46 at 50 °C

Valve model	**DLHZO**												**DLKZOR**						
Pressure limits [bar]	ports **P**, **A**, **B** = 350; **T** = 210 (250 with external drain /Y) **Y** = 10												ports **P**, **A**, **B** = 315; **T** = 210 (250 with external drain /Y) **Y** = 10						
Spool type and size	**L0**	**L1**	**V1**	**L3**	**V3**	**L5**	**T5**	**L7**	**T7**	**V7**	**D7**	**DT7**	**L3**	**T3**	**L7**	**T7**	**V7**	**D7**	**DT7**
Nominal flow Δp P-T [l/min] **(1)** Δp= 30 bar	2,5	4,5	8	9	13	18		26			26÷13 **(4)**		40		60			60÷33 **(4)**	
Δp= 70 bar	4	7	12	14	20	28		40			40÷20 **(4)**		60		100			100÷50 **(4)**	
Max permissible flow	8	14	16	30	40	50		70			70÷40 **(4)**		110		130			130÷65 **(4)**	
Leakage **(2)** [cm³/min]	<100	<200	<100	<300	<150	<500	<200	<900	<200	<200	<700	<200	<1000	<400	<1500	<400	<400	<1200	<400
Response time **(3)** [ms]	≤ 10												≤ 15						
Hysteresis	≤ 0,1 [% of max regulation]																		
Repeatibility	± 0,1 [% of max regulation]																		
Thermal drift	zero point displacement < 1% at ΔT = 40°C																		

(1) For different Δp, the max flow is in accordance to the diagrams in section 15.2
(2) Referred to spool in neutral position and 50°C oil temperature
(3) 0-100% step signal
(4) For spool type D7 and DT7 the flow value is referred to single path P-A (A-T) ÷ P-B (B-T) at Δp/2 per control edge

13 ELECTRICAL CHARACTERISTICS

Power supplies	Nominal : +24 VDC Rectified and filtered : VRMS = 20 ÷ 32 VMAX (ripple max 10 % VPP)				
Max power consumption	50 W				
Max. solenoid current	**DLHZO** = 2,6 A **DLKZOR** = 3 A				
Coil resistance R at 20°C	**DLHZO** = 3 ÷ 3,3 Ω **DLKZOR** = 2,2 ÷ 2,4 Ω				
Analog input signals	Voltage: range ±10 VDC (24 VMAX tolerant) Input impedance: Ri > 50 kΩ Current: range ±20 mA Input impedance: Ri = 500 Ω				
Monitor outputs	Output range: voltage ±10 VDC @ max 5 mA current ±20 mA @ max 500 Ω load resistance				
Enable input	Range: 0 ÷ 5 VDC (OFF state), 9 ÷ 24 VDC (ON state), 5 ÷ 9 VDC (not accepted); Input impedance: Ri > 10 kΩ				
Fault output	Output range: 0 ÷ 24 VDC (ON state > [power supply - 2 V] ; OFF state < 1 V) @ max 50 mA; external negative voltage not allowed (e.g. due to inductive loads)				
Pressure/Force transducer power supply (only for SP, SF, SL)	+24VDC @ max 100 mA (E-ATR-8 see tech table **GS465**)				
Alarms	Solenoid not connected/short circuit, cable break with current reference signal, over/under temperature, valve spool transducer malfunctions, alarms history storage function				
Insulation class	H (180°) Due to the occurring surface temperatures of the solenoid coils, the European standards ISO 13732-1 and EN982 must be taken into account				
Protection degree to DIN EN60529	IP66 / IP67 with mating connectors				
Duty factor	Continuous rating (ED=100%)				
Tropicalization	Tropical coating on electronics PCB				
Additional characteristics	Short circuit protection of solenoid's current supply; 3 leds for diagnostic (only for TES); spool position control (SN) or pressure/force control (SP, SF, SL) by P.I.D. with rapid solenoid switching; protection against reverse polarity of power supply				
Communication interface	USB Atos ASCII coding	IO-Link Interface and System Specification 1.1.3	CANopen EN50325-4 + DS408	PROFIBUS DP EN50170-2/IEC61158	EtherCAT POWERLINK EtherNet/IP PROFINET IO RT/IRT IEC 61158
Communication physical layer	not insulated USB 2.0+USB OTG	SDCI class port B	optical insulated CAN ISO11898	optical insulated RS485	Fast Ethernet, insulated 100 Base TX
Recommended wiring cable	LiYCY shielded cables, see section 24				

Note: a maximum time of 800 ms (depending on communication type) has to be considered between the driver energizing with the 24 VDC power supply and when the valve is ready to operate. During this time the current to the valve coils is switched to zero.

14 SEALS AND HYDRAULIC FLUIDS - for other fluids not included in below table, consult our technical office

Seals, recommended fluid temperature	NBR seals (standard) = -20°C ÷ +60°C, with HFC hydraulic fluids = -20°C ÷ +50°C FKM seals (/PE option) = -20°C ÷ +80°C NBR low temp. seals (/BT option) = -40°C ÷ +60°C, with HFC hydraulic fluids = -20°C ÷ +50°C		
Recommended viscosity	20÷100 mm²/s - max allowed range 15 ÷ 380 mm²/s		
Max fluid contamination level — normal operation	ISO4406 class 18/16/13 NAS1638 class 7		see also filter section at www.atos.com or KTF catalog
Max fluid contamination level — longer life	ISO4406 class 16/14/11 NAS1638 class 5		
Hydraulic fluid	**Suitable seals type**	**Classification**	**Ref. Standard**
Mineral oils	NBR, FKM, NBR low temp.	HL, HLP, HLPD, HVLP, HVLPD	DIN 51524
Flame resistant without water	FKM	HFDU, HFDR	ISO 12922
Flame resistant with water	NBR, NBR low temp.	HFC	

15 DIAGRAMS (based on mineral oil ISO VG 46 at 50 °C)

15.1 Regulation diagrams

1 = Linear spools L
2 = Differential - linear spool D7

3 = Differential non linear spool DT7
4 = Non linear spool T5 (only for DLHZO)

5 = Non linear spool T3 (only for DLKZOR) and T7
6 = Progressive spool V

T3, T5 and T7 spool types are specific for fine low flow control in the range from 0 to 60% (T5) and 0 to 40% (T3 and T7) of max spool stroke.
The non linear characteristics of the spool is compensated by the electronic driver, so the final valve regulation is resulting linear respect the reference signal (dotted line).

DT7 has the same characteristic of T7 but it is specific for applications with cylinders with area ratio 1:2

Note:
Hydraulic configuration vs. reference signal:

Standard:
Reference signal 0 ÷ +10 V / 12 ÷ 20 mA } P → A / B → T

Reference signal 0 ÷ -10 V / 12 ÷ 4 mA } P → B / A → T

option /B:
Reference signal 0 ÷ +10 V / 12 ÷ 20 mA } P → B / A → T

Reference signal 0 ÷ -10 V / 12 ÷ 4 mA } P → A / B → T

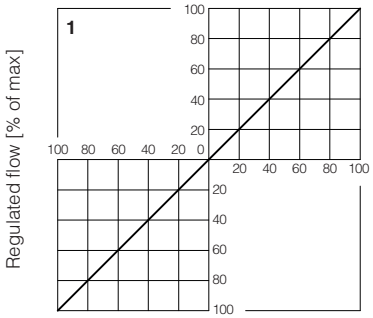

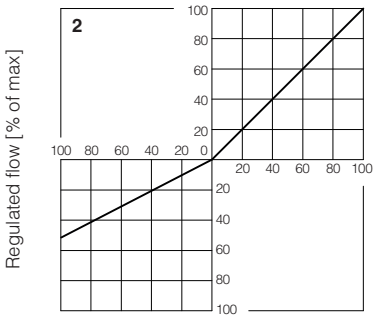

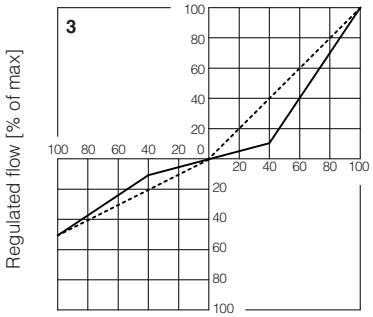

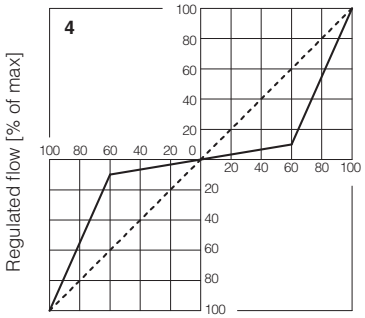

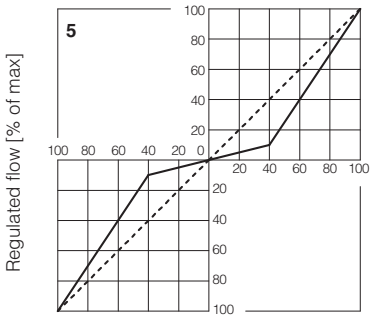

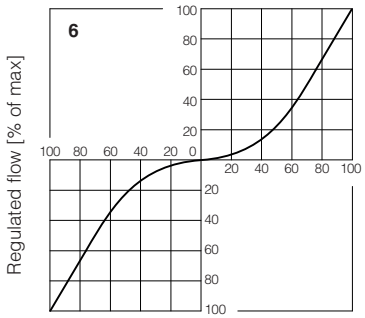

15.2 Flow /Δp diagrams

Stated at 100% of spool stroke

DLHZO:
1 = spool L7, T7, V7, D7, DT7
2 = spool L5, T5
3 = spool V3
4 = spool L3
5 = spool L1, V1
6 = spool L0

DLKZOR:
7 = spool L7, T7, V7, D7, DT7
8 = spool L3, T3

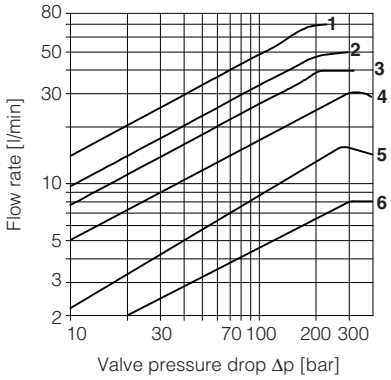

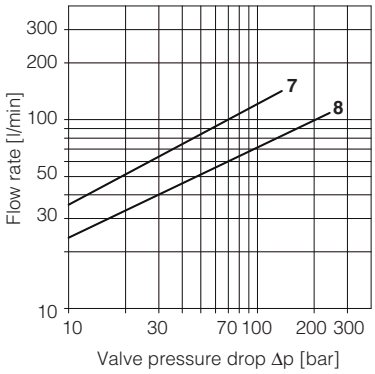

15.3 Pressure gain

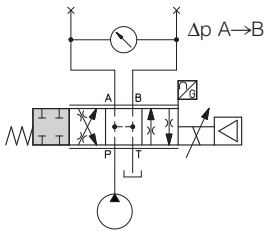

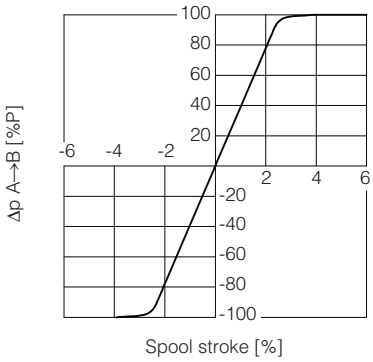

15.4 Response time

The response times in below diagrams are measured at different steps of the reference input signal. They have to be considered as average values.

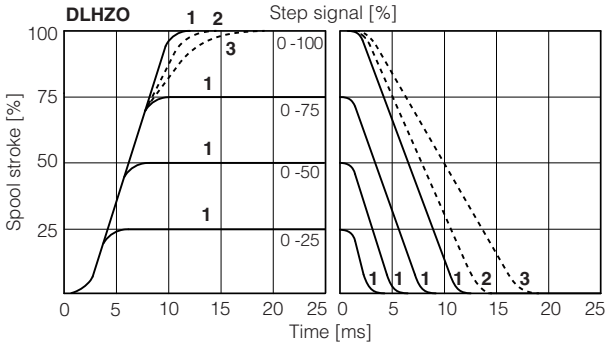

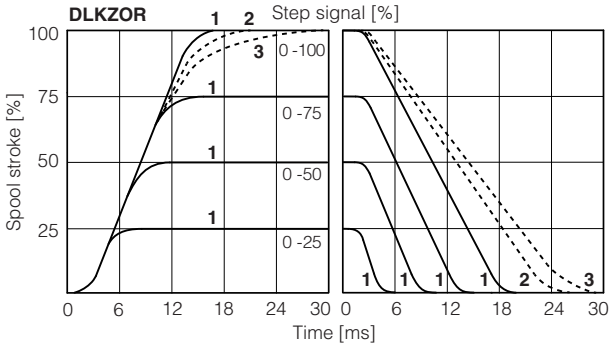

1 = dynamic **2** = balanced (*) **3** = smooth (*)

(*) Response time is represented only for 0-100% step; for intermediate steps, the response time increment of presets 2 (balanced) and 3 (smooth) with respect to the preset 1 (dynamic) is proportional to the step amplitude of the reference input signal

15.5 DLHZO Bode diagrams

Stated at nominal hydraulic conditions

± 5% nominal stroke:
1 = dynamic
2 = balanced
3 = smooth

± 100% nominal stroke:
4 = dynamic
5 = balanced
6 = smooth

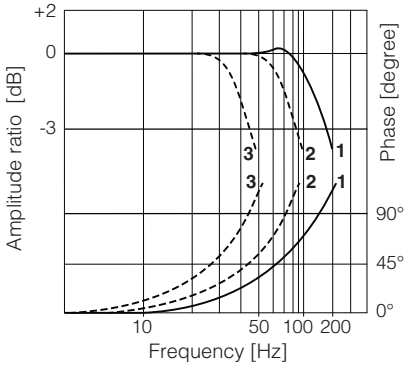

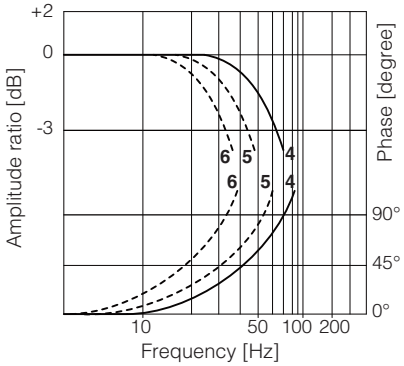

15.6 DLKZOR Bode diagrams

Stated at nominal hydraulic conditions

± 5% nominal stroke:
1 = dynamic
2 = balanced
3 = smooth

± 100% nominal stroke:
4 = dynamic
5 = balanced
6 = smooth

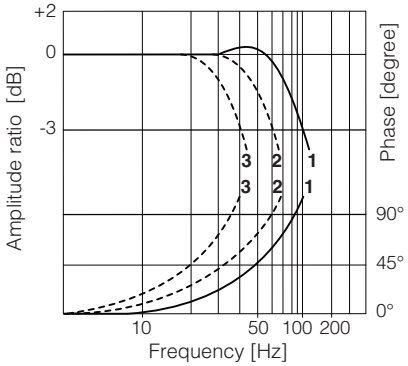

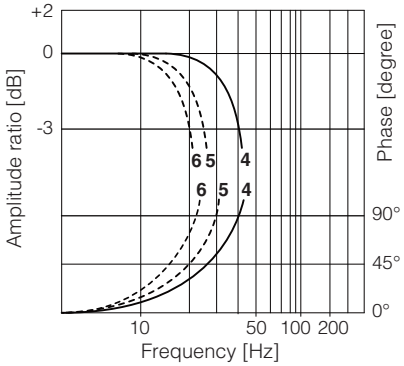

16 FAIL SAFE POSITION

CONFIGURATION	LINEAR	NOT LINEAR
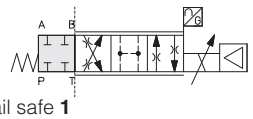 fail safe **1**	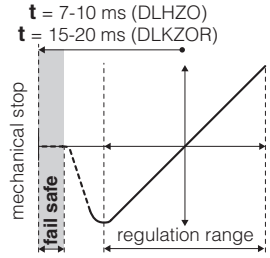	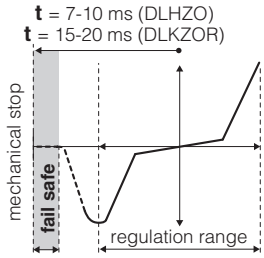
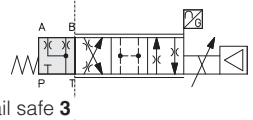 fail safe **3**	**t** = time required by the valve to switch from central to fail safe position at the power switch-off, with pressure 0 to 100 bar	
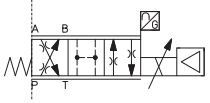 without fail safe	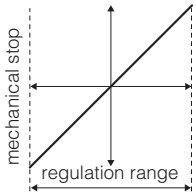	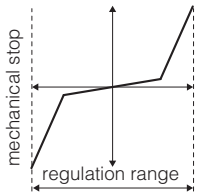

Fail safe connections			**P → A**	**P → B**	**A → T**	**B → T**
Leakage [cm³/min] at P = 100 bar **(1)**		Fail safe 1	50	70	70	50
		Fail safe 3	50	70	-	-
Flow [l/min] **(2)**	DLHZO	Fail safe 3	-	-	15÷30	10÷20
	DLKZOR		-	-	40÷60	25÷40

(1) Referred to spool in fail safe position and 50°C oil temperature **(2)** Referred to spool in fail safe position at Δp = 35 bar per edge

17 HYDRAULIC OPTIONS

B = Solenoid, on-board digital driver and position transducer at side of port A of the main stage. For hydraulic configuration vs reference signal, see 15.1

Y = This option is mandatory if the pressure in port T exceeds 210 bar.

18 ELECTRONIC OPTIONS - not available for TEB-SN-IL

F = This option permits to monitor the eventual fault condition of the driver, as for example the solenoid short circuit/not connected, reference signal cable broken for option /I, spool position transducer broken, etc. - see 20.9 for signal specifications.

I = This option provides 4 ÷ 20 mA current reference and monitor signals, instead of the standard ±10 VDC.
Input signal can be reconfigured via software selecting between voltage and current, within a maximum range of ±10 VDC or ±20 mA.
It is normally used in case of long distance between the machine control unit and the valve or where the reference signal can be affected by electrical noise; the valve functioning is disabled in case of reference signal cable breakage.

Q = This option permits to inhibit the valve function without removing the power supply to the driver. Upon disable command the current to the solenoid is zeroed and the valve's spool moves to rest position.
The option /Q is suggested for all cases where the valve has to be frequently inhibited during the machine cycle – see 20.7 for signal specifications.

Z = This option provides, on the 12 pin main connector, the following additional features:
Fault output signal - see above option **/F**
Enable input signal - see above option **/Q**
Repeat enable output signal - only for **TEB-SN-NP** (see 20.8)
Power supply for driver's logics and communication - only for **TES** (see 20.2)

C = This option is available to connect pressure (force) transducers with 4 ÷ 20 mA current output signal, instead of the standard ±10 VDC.
Input signal can be reconfigured via software selecting between voltage and current, within a maximum range of ±10 VDC or ±20 mA.

19 POSSIBLE COMBINED OPTIONS

Standard versions for **TEB-SN-NP** and **TES-SN**:
/BF, /BFI, /BFIY, /BFY, /BI, /BIQ, /BIQY, /BIY, /BIYZ, /BIZ, /BQ,
/BQY /BY, /BYZ, /BZ,
/FI, /FIY, /FY,
/IQ, /IQY, /IY, /IYZ, /IZ,
/QY, /YZ

Standard versions for **TEB-SN-IL**:
/BY

Standard versions for **TES-SP, SF, SL**:
/BC, /BCI, /BCIY, /BCY, /BI, /BIY, /BY,
/CI, /CIY, /CY,
/IY

Safety certified versions for **TES-SN**:
/BI/U, /BIY/U, /B/U, /BY/U, /I/U, /IY/U, /Y/U
/BI/K, /BIY/K, /B/K, /BY/K, /I/K, /IY/K, /Y/K

Safety certified versions for **TES-SP, SF, SL**:
/BC/U, /BCI/U, /BCIY/U, /BCY/U, /BI/U, /BIY/U, /B/U, /BY/U,
/C/U, /CI/U, /CIY/U, /CY/U, /I/U, /IY/U, /Y/U
/BC/K, /BCI/K, /BCIY/K, /BCY/K, /BI/K, /BIY/K, /B/K, /BY/K,
/C/K, /CI/K, /CIY/K, /CY/K, /I/K, /IY/K, /Y/K

Note: **/T** Bluetooth adapter option can be combined with all other options

20 POWER SUPPLY AND SIGNALS SPECIFICATIONS

Generic electrical output signals of the valve (e.g. fault or monitor signals) must not be directly used to activate safety functions, like to switch-ON/OFF the machine's safety components, as prescribed by the European standards (Safety requirements of fluid technology systems and components-hydraulics, ISO 4413).

For **TEB-SN-IL** signals see section 21

For certified safety options: **/U** see tech. table **FY100** and **/K** see tech. table **FY200**

20.1 Power supply (V+ and V0)

The power supply must be appropriately stabilized or rectified and filtered: apply at least a 10000 μF/40 V capacitance to single phase rectifiers or a 4700 μF/40 V capacitance to three phase rectifiers. In case of separate power supply see 20.2.

⚠ A safety fuse is required in series to each power supply: 2,5 A time lag fuse.

20.2 Power supply for driver's logic and communication (VL+ and VL0) - only for **TES** with **/Z** option and for **TES-SP, SF, SL** with fieldbus

The power supply for driver's logic and communication must be appropriately stabilized or rectified and filtered: apply at least a 10000 μF/40 V capacitance to single phase rectifiers or a 4700 μF/40 V capacitance to three phase rectifiers.

The separate power supply for driver's logic on pin 9 and 10, allow to remove solenoid power supply from pin 1 and 2 maintaining active the diagnostics, USB and fieldbus communications.

⚠ A safety fuse is required in series to each driver's logic and communication power supply: 500 mA fast fuse.

20.3 Flow reference input signal (Q_INPUT+)

The driver controls in closed loop the valve spool position proportionally to the external reference input signal.

Reference input signal is factory preset according to selected valve code, defaults are ±10 VDC for standard and 4 ÷ 20 mA for /I option.

Input signal can be reconfigured via software selecting between voltage and current, within a maximum range of ±10 VDC or ± 20 mA.

Drivers with fieldbus interface can be software set to receive reference signal directly from the machine control unit (fieldbus reference).

Analog reference input signal can be used as on-off commands with input range 0 ÷ 24VDC.

20.4 Pressure or force reference input signal (F_INPUT+) - only for **TES-SP, SF, SL**

Functionality of F_INPUT+ signal (pin 7), is used as reference for the driver pressure/force closed loop (see tech. table **FS500**).

Reference input signal is factory preset according to selected valve code, defaults are ±10 VDC for standard and 4 ÷ 20 mA for /I option.

Input signal can be reconfigured via software selecting between voltage and current, within a maximum range of ±10 VDC or ± 20 mA.

Drivers with fieldbus interface can be software set to receive reference signal directly by the machine control unit (fieldbus reference).

Analog reference input signal can be used as on-off commands with input range 0 ÷ 24VDC.

20.5 Flow monitor output signal (Q_MONITOR) - not for **/F**

The driver generates an analog output signal proportional to the actual spool position of the valve; the monitor output signal can be software set to show other signals available in the driver (e.g. analog reference, fieldbus reference, pilot spool position).

Monitor output signal is factory preset according to selected valve code, defaults are ±10 VDC for standard and 4 ÷ 20 mA for /I option.

Output signal can be reconfigured via software selecting between voltage and current, within a maximum range of ±10 VDC or ± 20 mA.

20.6 Pressure or force monitor output signal (F_MONITOR) - only for **TES-SP, SF, SL**

The driver generates an analog output signal proportional to alternated pressure/force control; the monitor output signal can be software set to show other signals available in the driver (e.g. analog reference, force reference).

Monitor output signal is factory preset according to selected valve code, defaults are ±10 VDC for standard and 4 ÷ 20 mA for /I option.

Output signal can be reconfigured via software selecting between voltage and current, within a maximum range of ±10 VDC or ± 20 mA.

20.7 Enable input signal (ENABLE) - not for standard and **/F**

To enable the driver, supply a 24 VDC on pin 3 (pin C): Enable input signal allows to enable/disable the current supply to the solenoid, without removing the electrical power supply to the driver; it is used to active the communication and the other driver functions when the valve must be disabled for safety reasons. This condition **does not comply** with norms IEC 61508 and ISO 13849.

Enable input signal can be used as generic digital input by software selection.

20.8 Repeat enable output signal (R_ENABLE) - only for **TEB-SN-NP** with **/Z** option

Repeat enable is used as output repeater signal of enable input signal (see 20.7).

20.9 Fault output signal (FAULT) - not for standard and **/Q**

Fault output signal indicates fault conditions of the driver (solenoid short circuits/not connected, reference signal cable broken for 4 ÷ 20 mA input, spool position transducer cable broken, etc.). Fault presence corresponds to 0 VDC, normal working corresponds to 24 VDC.

Fault status is not affected by the Enable input signal. Fault output signal can be used as digital output by software selection.

20.10 Remote pressure/force transducer input signal - only for **TES-SP, SF, SL**

Analog remote pressure transducers or load cell can be directly connected to the driver (see 22.5).

Analog input signal is factory preset according to selected valve code, defaults are ±10 VDC for standard and 4 ÷ 20 mA for /C option.

Input signal can be reconfigured via software selecting between voltage and current, within a maximum range of ±10 VDC or ± 20 mA.

Refer to pressure/force transducer characteristics to select the transducer type according to specific application requirements (see tech table **FS500**).

20.11 Multiple PID selection (D_IN0 and D_IN1) - only **NP** execution for **TES-SP, SF, SL**

Two on-off input signals are available on the main connector to select one of the four pressure (force) PID parameters setting, stored into the driver.

Switching the active setting of pressure PID during the machine cycle allows to optimize the system dynamic response in different hydraulic working conditions (volume, flow, etc.).

Supply a 24 VDC or a 0 VDC on pin 9 and/or pin 10, to select one of the PID settings as indicated by binary code table at side. Gray code can be selected by software.

	PID SET SELECTION			
PIN	**SET 1**	**SET 2**	**SET 3**	**SET 4**
9	0	24 VDC	0	24 VDC
10	0	0	24 VDC	24 VDC

21 IO-LINK SIGNALS SPECIFICATIONS - only for **TEB-SN-IL**

21.1 Power supply for IO-Link communication (L+ and L-)

The IO-Link master provides dedicated 24 VDC power supply for IO-Link communication.
Maximum power consumption: 2 W
Internal electrical isolation of power L+, L- from P24, N24

21.2 Power supply for driver's logic and valve regulation (P24 and N24)

The IO-Link master provides dedicated 24 VDC power supply for valve regulation, logics and diagnostics.
Maximum power consumption: 50 W
Internal electrical isolation of power P24, N24 from L+, L-

21.3 IO-Link data line (C/Q)

C/Q signal is used to establish communication between IO-Link master and valve.

22 ELECTRONIC CONNECTIONS

For electronic connection of certified safety options **/U** see tech. table **FY100** and **/K** see tech. table **FY200**

22.1 Main connector signals - 7 pin (A1) **Standard**, **/Q** and **/F** options

PIN	Standard	/Q	/F	TECHNICAL SPECIFICATIONS	NOTES
A	**V+**			Power supply 24 VDC	Input - power supply
B	**V0**			Power supply 0 VDC	Gnd - power supply
C	**AGND**		**AGND**	Analog ground	Gnd - analog signal
		ENABLE		Enable (24 VDC) or disable (0 VDC) the valve, referred to V0	Input - on/off signal
D	**Q_INPUT+**			Flow reference input signal: ±10 VDC / ±20 mA maximum range Defaults are ±10 VDC for standard and 4 ÷ 20 mA for /I option	Input - analog signal **Software selectable**
E	**INPUT-**			Negative reference input signal for Q_INPUT+	Input - analog signal
F	**Q_MONITOR** referred to: AGND V0			Flow monitor output signal: ±10 VDC / ±20 mA maximum range Defaults are ±10 VDC for standard and 4 ÷ 20 mA for /I option	Output - analog signal **Software selectable**
			FAULT	Fault (0 VDC) or normal working (24 VDC)	Output - on/off signal
G	**EARTH**			Internally connected to the driver housing	

22.2 Main connector signals - 12 pin (A2) **/Z** option and **TES-SP, SF, SL**

PIN	TEB-SN /Z	TES-SN /Z	TES-SP, SF, SL Fieldbus	TES-SP, SF, SL NP	TECHNICAL SPECIFICATIONS	NOTES
1	**V+**				Power supply 24 VDC	Input - power supply
2	**V0**				Power supply 0 VDC	Gnd - power supply
3	**ENABLE** referred to: V0	VL0	VL0	V0	Enable (24 VDC) or disable (0 VDC) the valve	Input - on/off signal
4	**Q_INPUT+**				Flow reference input signal: ±10 VDC / ±20 mA maximum range Defaults are ±10 VDC for standard and 4 ÷ 20 mA for /I option	Input - analog signal **Software selectable**
5	**INPUT-**				Negative reference input signal for Q_INPUT+ and F_INPUT+	Input - analog signal
6	**Q_MONITOR** referred to: AGND	VL0	VL0	V0	Flow monitor output signal: ±10 VDC / ±20 mA maximum range Defaults are ±10 VDC for standard and 4 ÷ 20 mA for /I option	Output - analog signal **Software selectable**
7	**AGND**				Analog ground	Gnd - analog signal
		NC			Do not connect	
			F_INPUT+		Pressure/Force reference input signal: ±10 VDC / ±20 mA maximum range Defaults are ±10 VDC for standard and 4 ÷ 20 mA for /I option	Input - analog signal **Software selectable**
8	**R_ENABLE**				Repeat enable, output repeater signal of enable input, referred to V0	Output - on/off signal
		NC			Do not connect	
			F_MONITOR referred to: VL0	V0	Pressure/Force monitor output signal: ±10 VDC / ±20 mA maximum range Defaults are ±10 VDC for standard and 4 ÷ 20 mA for /I option	Output - analog signal **Software selectable**
9	**NC**				Do not connect	
		VL+			Power supply 24 VDC for driver's logic and communication	Input - power supply
				D_IN0	Multiple pressure/force PID selection, referred to V0	Input - on/off signal
10	**NC**				Do not connect	
		VL0			Power supply 0 VDC for driver's logic and communication	Gnd - power supply
				D_IN1	Multiple pressure/force PID selection (not available for SF), referred to V0	Input - on/off signal
11	**FAULT** referred to: V0	VL0	VL0	V0	Fault (0 VDC) or normal working (24 VDC)	Output - on/off signal
PE	**EARTH**				Internally connected to the driver housing	

Note: do not disconnect VL0 before VL+ when the driver is connected to PC USB port

22.3 IO-Link connector signals - M12 - 5 pin - Coding A, port class B (A) only for **TEB-SN-IL**

PIN	SIGNAL	TECHNICAL SPECIFICATIONS	NOTES
1	**L+**	Power supply 24 VDC for IO-Link communication	Input - power supply
2	**P24**	Power supply 24 VDC for valve regulation, logics and diagnostics	Input - power supply
3	**L-**	Power supply 0 VDC for IO-Link communication	Gnd - power supply
4	**C/Q**	IO-Link data line	Input / Output - signal
5	**N24**	Power supply 0 VDC for valve regulation, logics and diagnostics	Gnd - power supply

Note: L+, L- and P24, N24 are electrically isolated

22.4 Communications connectors (B) - (C)

(B) **USB connector - M12 - 5 pin** always present

PIN	SIGNAL	TECHNICAL SPECIFICATION (1)
1	**+5V_USB**	Power supply
2	**ID**	Identification
3	**GND_USB**	Signal zero data line
4	**D-**	Data line -
5	**D+**	Data line +

(C1) (C2) **BC fieldbus execution, connector - M12 - 5 pin**

PIN	SIGNAL	TECHNICAL SPECIFICATION (1)
1	**CAN_SHLD**	Shield
2	**not used**	(C1) - (C2) pass-through connection (2)
3	**CAN_GND**	Signal zero data line
4	**CAN_H**	Bus line (high)
5	**CAN_L**	Bus line (low)

(C1) (C2) **BP fieldbus execution, connector - M12 - 5 pin**

PIN	SIGNAL	TECHNICAL SPECIFICATION (1)
1	**+5V**	Termination supply signal
2	**LINE-A**	Bus line (high)
3	**DGND**	Data line and termination signal zero
4	**LINE-B**	Bus line (low)
5	**SHIELD**	

(C1) (C2) **EH, EW, EI, EP fieldbus execution, connector - M12 - 4 pin**

PIN	SIGNAL	TECHNICAL SPECIFICATION (1)
1	**TX+**	Transmitter
2	**RX+**	Receiver
3	**TX-**	Transmitter
4	**RX-**	Receiver
Housing	**SHIELD**	

(1) Shield connection on connector's housing is recommended

(2) Pin 2 can be fed with external +5V supply of CAN interface

22.5 Remote pressure/force transducer connector - M12 - 5 pin - only for **SP, SF, SL** (D)

PIN	SIGNAL	TECHNICAL SPECIFICATION	NOTES	(D1) SP, SL - Single transducer (1)		(D2) SF - Double transducers (1)	
				Voltage	Current	Voltage	Current
1	**VF +24V**	Power supply +24VDC	Output - power supply	Connect	Connect	Connect	Connect
2	**TR1**	1st signal transducer: ±10 VDC / ±20 mA maximum range	Input - analog signal **Software selectable**	Connect	Connect	Connect	Connect
3	**AGND**	Common gnd for transducer power and signals	Common gnd	Connect	/	Connect	/
4	**TR2**	2nd signal transducer: ±10 VDC / ±20 mA maximum range	Input - analog signal **Software selectable**	/	/	Connect	Connect
5	**NC**	Not connect		/	/	/	/

(1) Single/double transducer configuration is software selectable

Remote pressure transducers connection - example

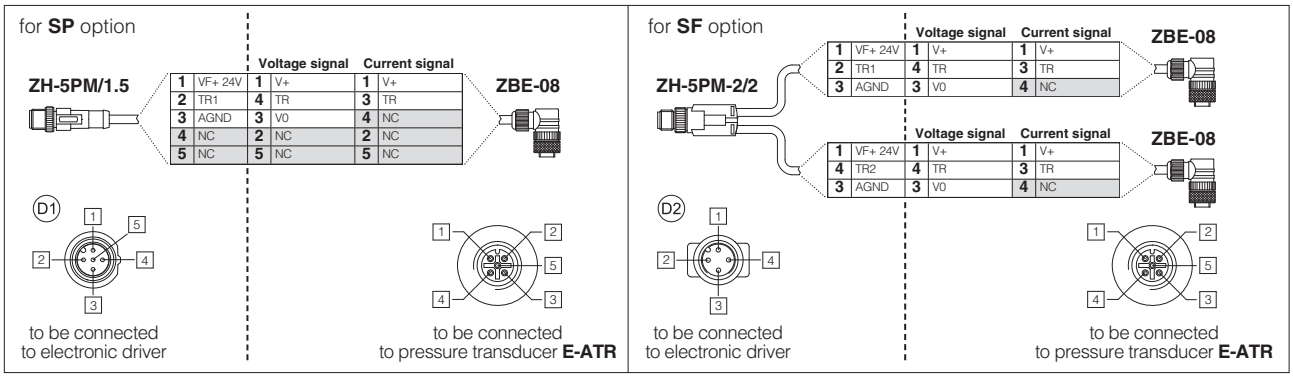

Note: pin layout always referred to driver's view

22.6 TEB-SN-NP connections layout

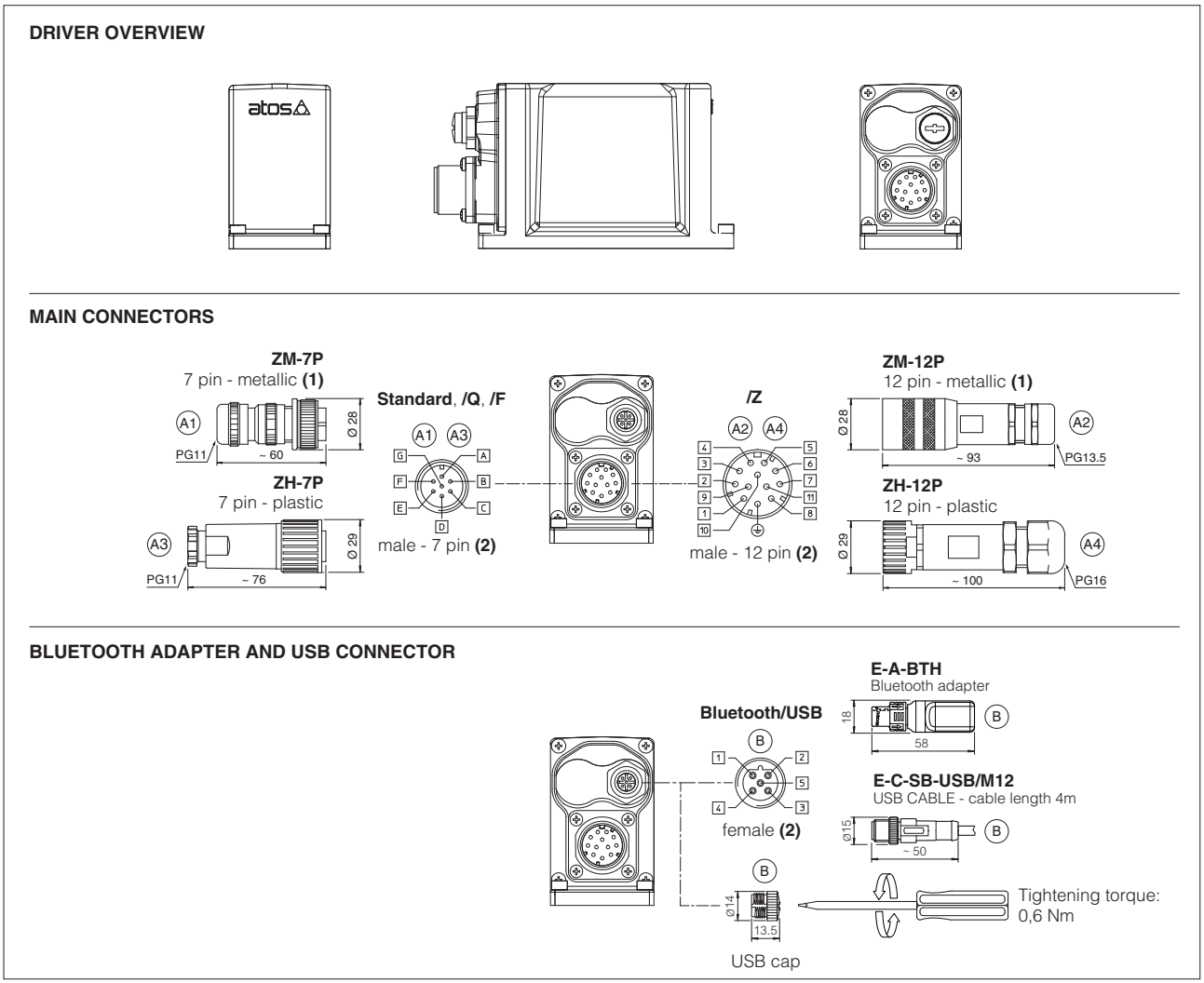

(1) Use of metallic connectors is strongly recommended in order to fulfill EMC requirements **(2)** Pin layout always referred to driver's view

22.7 TEB-SN-IL connections layout

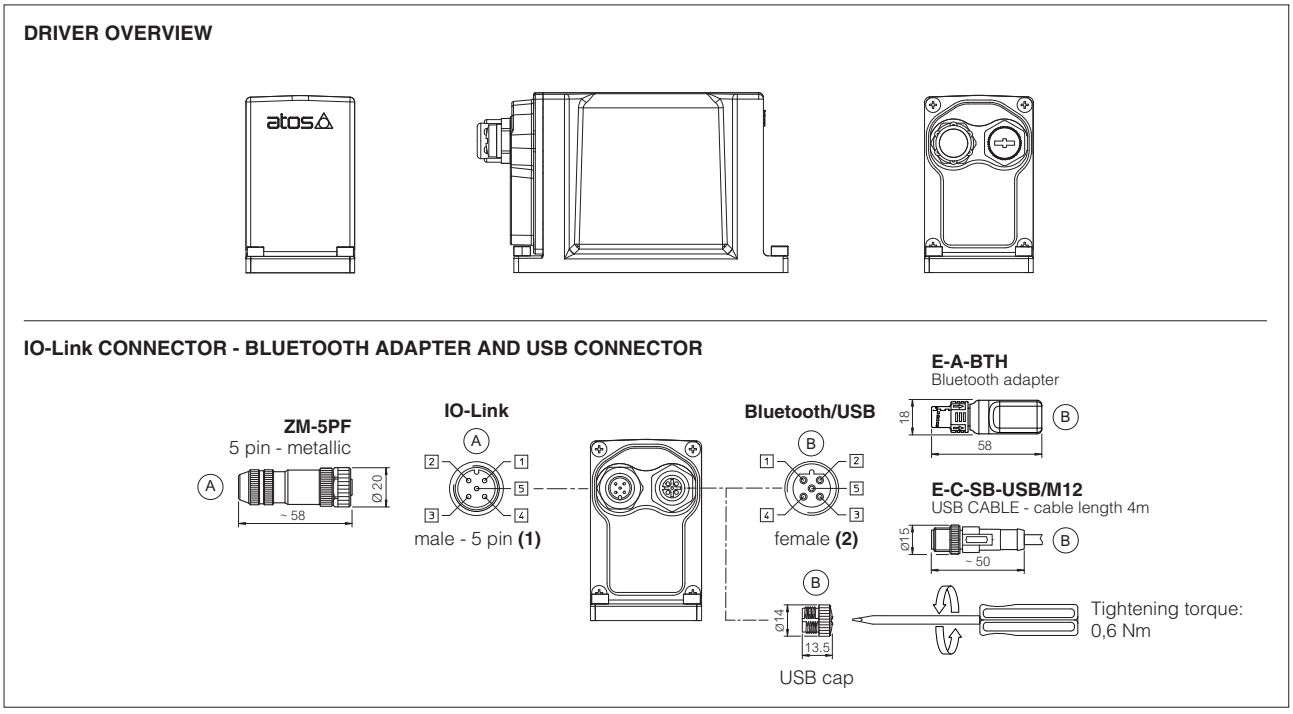

(1) Pin layout always referred to driver's view

22.8 TES connections layout

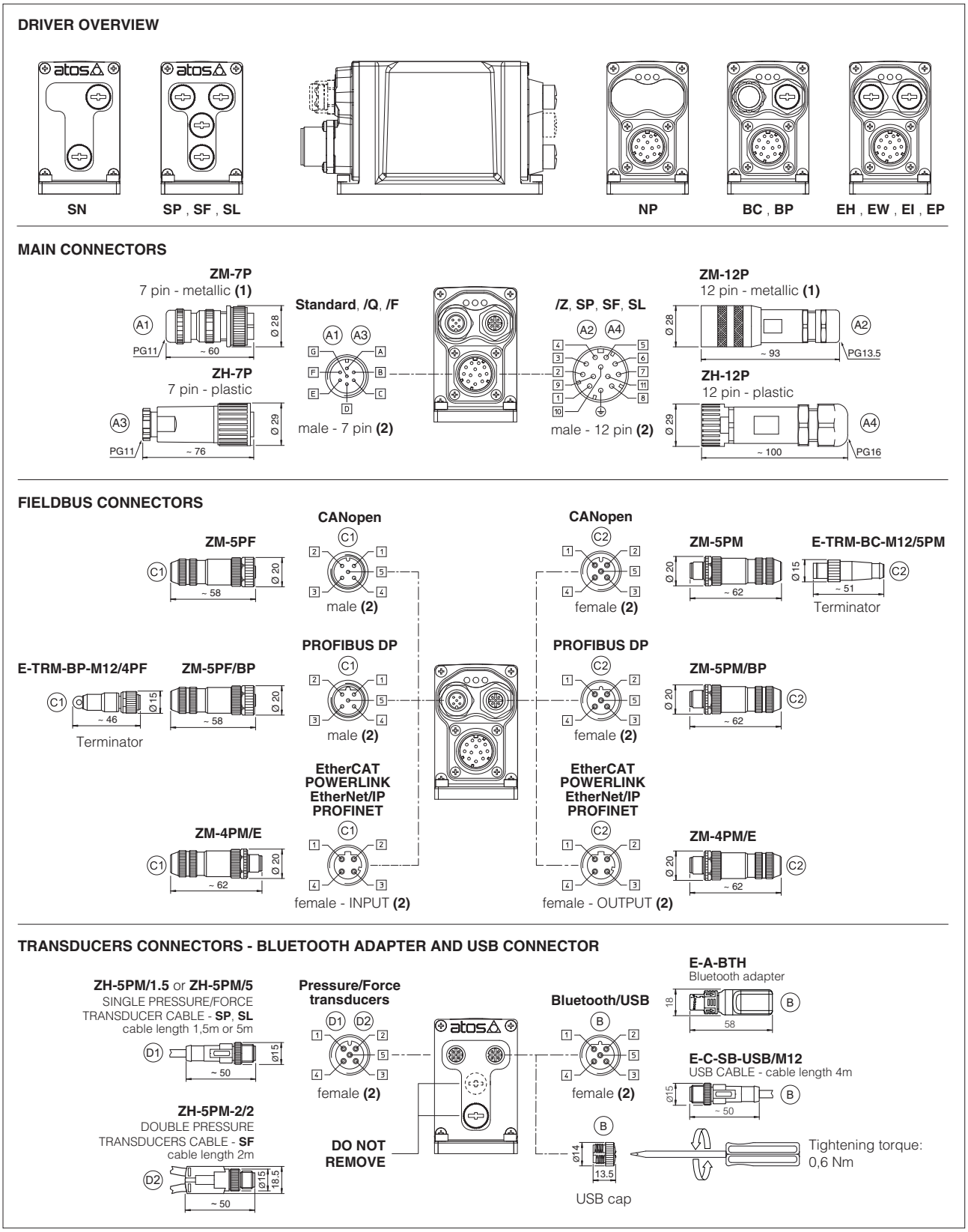

(1) Use of metallic connectors is strongly recommended in order to fulfill EMC requirements **(2)** Pin layout always referred to driver's view

22.9 Diagnostic LEDs - only for TES

Three leds show driver operative conditions for immediate basic diagnostics. Please refer to the driver user manual for detailed information.

FIELDBUS / LEDS	NP Not Present	BC CANopen	BP PROFIBUS DP	EH EtherCAT	EW POWERLINK	EI EtherNet/IP	EP PROFINET
L1	VALVE STATUS			LINK/ACT			
L2	NETWORK STATUS			NETWORK STATUS			
L3	SOLENOID STATUS			LINK/ACT			

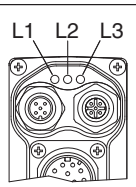

23 IN / OUT FIELDBUS COMMUNICATION CONNECTORS

Two fieldbus communication connectors are always available for digital drivers executions BC, BP, EH, EW, EI, EP. This features allows considerable technical advantages in terms of installation simplicity, wirings reduction and also avoid the usage expensive T-connectors.
For BC and BP executions the fieldbus connectors have an internal pass-through connection and can be used like end point of the fieldbus network, using an external terminator (see tech table **GS500**).
For EH, EW, EI and EP executions the external terminators are not required: each connector is internally terminated.

BC and BP pass-through connection

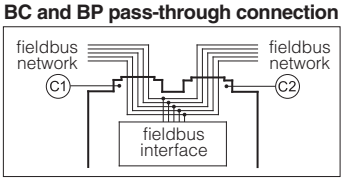

24 CONNECTORS CHARACTERISTICS - to be ordered separately

24.1 Main connectors - 7 pin

CONNECTOR TYPE	POWER SUPPLY AND SIGNALS	POWER SUPPLY AND SIGNALS
CODE	A1 ZM-7P	A3 ZH-7P
Type	7pin female straight circular	7pin female straight circular
Standard	According to MIL-C-5015	According to MIL-C-5015
Material	Metallic	Plastic reinforced with fiber glass
Cable gland	PG11	PG11
Recommended cable	LiYCY 7 x 0,75 mm² max 20 m (logic and power supply) or LiYCY 7 x 1 mm² max 40 m (logic and power supply)	LiYCY 7 x 0,75 mm² max 20 m (logic and power supply) or LiYCY 7 x 1 mm² max 40 m (logic and power supply)
Conductor size	up to 1 mm² - available for 7 wires	up to 1 mm² - available for 7 wires
Connection type	to solder	to solder
Protection (EN 60529)	IP 67	IP 67

24.2 Main connectors - 12 pin

CONNECTOR TYPE	POWER SUPPLY AND SIGNALS	POWER SUPPLY AND SIGNALS
CODE	A2 ZM-12P	A4 ZH-12P
Type	12pin female straight circular	12pin female straight circular
Standard	DIN 43651	DIN 43651
Material	Metallic	Plastic reinforced with fiber glass
Cable gland	PG13,5	PG16
Recommended cable	LiYCY 12 x 0,75 mm² max 20 m (logic and power supply)	LiYCY 10 x 0,14mm² max 40 m (logic) LiYY 3 x 1mm² max 40 m (power supply)
Conductor size	0,5 mm² to 1,5 mm² - available for 12 wires	0,14 mm² to 0,5 mm² - available for 9 wires 0,5 mm² to 1,5 mm² - available for 3 wires
Connection type	to crimp	to crimp
Protection (EN 60529)	IP 67	IP 67

24.3 IO-Link connector - only for **TEB-SN-IL**

CONNECTOR TYPE	IL IO-Link
CODE	A ZM-5PF
Type	5pin female straight circular
Standard	M12 coding A – IEC 61076-2-101
Material	Metallic
Cable gland	Pressure nut - cable diameter 6÷8 mm
Recommended cable	5 x 0,75 mm² max 20 m
Connection type	screw terminal
Protection (EN 60529)	IP 67

24.4 Fieldbus communication connectors

CONNECTOR TYPE	BC CANopen (1)		BP PROFIBUS DP (1)		EH EtherCAT, EW POWERLINK, EI EtherNet/IP, EP PROFINET (2)
CODE	C1 ZM-5PF	C2 ZM-5PM	C1 ZM-5PF/BP	C2 ZM-5PM/BP	C1 C2 ZM-4PM/E
Type	5 pin female straight circular	5 pin male straight circular	5 pin female straight circular	5 pin male straight circular	4 pin male straight circular
Standard	M12 coding A – IEC 61076-2-101		M12 coding B – IEC 61076-2-101		M12 coding D – IEC 61076-2-101
Material	Metallic		Metallic		Metallic
Cable gland	Pressure nut - cable diameter 6÷8 mm		Pressure nut - cable diameter 6÷8 mm		Pressure nut - cable diameter 4÷8 mm
Cable	CANbus Standard (DR 303-1)		PROFIBUS DP Standard		Ethernet standard CAT-5
Connection type	screw terminal		screw terminal		terminal block
Protection (EN 60529)	IP67		IP 67		IP 67

(1) E-TRM-** terminators can be ordered separately - see tech table **GS500**

(2) Internally terminated

24.5 Remote pressure/Force transducer connectors - only for **SP, SF, SL**

CONNECTOR TYPE	SP, SL - Single transducer		SF - Double transducers
CODE	D1 ZH-5PM/1.5	D1 ZH-5PM/5	D2 ZH-5PM-2/2
Type	5 pin male straight circular		4 pin male straight circular
Standard	M12 coding A – IEC 61076-2-101		M12 coding A – IEC 61076-2-101
Material	Plastic		Plastic
Cable gland	Connector moulded on cables 1,5 m length	5 m length	Connector moulded on cables 2 m length
Cable	5 x 0,25 mm²		3 x 0,25 mm² (both cables)
Connection type	molded cable		splitting cable
Protection (EN 60529)	IP 67		IP 67

DLHZO-TEB, DLHZO-TES

ISO 4401: 2005
Mounting surface: 4401-03-02-0-05 (see table P005)
(for /Y surface 4401-03-03-0-05 without X port)

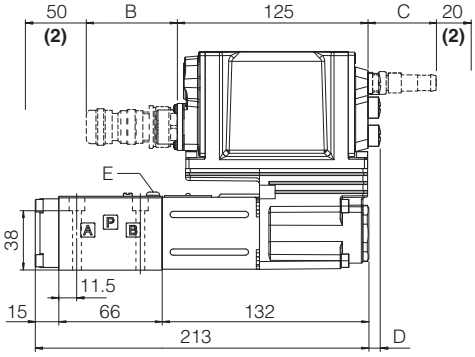

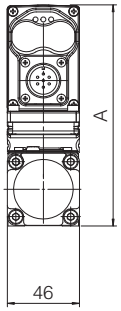

DLHZO	A	B (1)	C (1)	D	E (air bleeding)	Mass [kg]
TEB - SN - IL	140	60	-	-	3	2,7
TEB - SN - NP	140	100	-	-		
TES - SN - NP, BC, BP, EH	140	100	58	8		
TES - SN - EW, EI, EP	155	100	58	8		
TES - SP, SF, SL - *	155	100	58	8		

(1) The indicated dimension refers to the longer connectors or Bluetooth adapter
For dimensions of connectors and Bluetooth adapter, see sections 22.6, 22.7 and 22.8
(2) Space required for connection cable and for connector removal

DLKZOR-TEB, DLKZOR-TES

ISO 4401: 2005
Mounting surface: 4401-05-04-0-05 (see table P005)
(for /Y surface 4401-05-05-0-05 without X port)

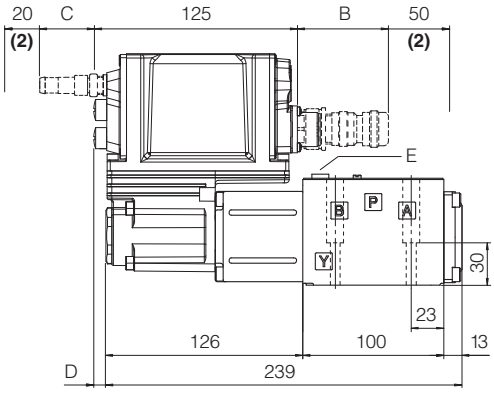

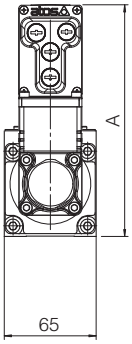

DLKZOR	A	B (1)	C (1)	D	E (air bleeding)	Mass [kg]
TEB - SN - IL	150	60	-	-	4 or 13	4,7
TEB - SN - NP	150	100	-	-		
TES - SN - NP, BC, BP, EH	150	100	58	8		
TES - SN - EW, EI, EP	165	100	58	8		
TES - SP, SF, SL - *	165	100	58	8		

(1) The indicated dimension refers to the longer connectors or Bluetooth adapter
For dimensions of connectors and Bluetooth adapter, see sections 22.6, 22.7 and 22.8
(2) Space required for connection cable and for connector removal

Note: for /B option the solenoid, the LVDT transducer and the on-board digital driver are at side of port A

26 FASTENING BOLTS AND SEALS

	DLHZO	DLKZOR
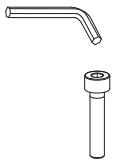	**Fastening bolts:** 4 socket head screws M5x50 class 12.9 Tightening torque = 8 Nm	**Fastening bolts:** 4 socket head screws M6x40 class 12.9 Tightening torque = 15 Nm
	Seals: 4 OR 108 Diameter of ports A, B, P, T: Ø 7,5 mm (max) 1 OR 2025 Diameter of port Y: Ø = 3,2 mm (only for /Y option)	**Seals:** 5 OR 2050 Diameter of ports A, B, P, T: Ø 11,2 mm (max) 1 OR 108 Diameter of port Y: Ø = 5 mm (only for /Y option)

27 RELATED DOCUMENTATION

FS001	Basics for digital electrohydraulics
FS500	Digital proportional valves with p/Q control
FS610	Digital proportional valves with integral axis controller
FS900	Operating and maintenance information for proportional valves
FY100	Safety proportional valves - option /U
FY200	Safety proportional valves - option /K
GS500	Programming tools
GS510	Fieldbus
GS520	IO-Link interface
K800	Electric and electronic connectors
P005	Mounting surfaces for electrohydraulic valves
QB300	Quickstart for TEB valves commissioning
QF300	Quickstart for TES valves commissioning
Y010	Basics for safety components
E-MAN-RI-LEB	TEB/LEB user manual
E-MAN-RI-LES	TES/LES user manual
E-MAN-RI-LES-S	TES/LES with p/Q control user manual

Servoproportional directional valves sleeve execution

direct, with LVDT transducer and zero spool overlap with fail safe

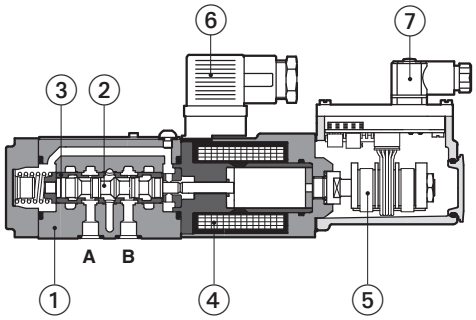

DLHZO-T-060

① Valve body
② Spool
③ Sleeve
④ Proportional solenoid
⑤ LVDT transducer
⑥ Solenoid connector
⑦ Transducer connector

DLHZO-T, DLKZOR-T

Servoproportional directional valves, direct, with LVDT position transducer and zero spool overlap for best performances in any position closed loop.

The valves operate in association with digital off-board divers or axis card, see section 2.

The LVDT transducer and the sleeve execution grant very high regulation accuracy and response sensitivity.

The fail safe position permits to intercept the actuator movement in case of power supply interruption.

Spools regulation characteristics:
L = linear
V = progressive
T = non linear for fine low flow control
D and DT = differential, for control of actuators with area ratio 1:2

DLHZO:	**DLKZOR**:
Size: **06** - ISO 4401	Size: **10** - ISO 4401
Max flow: **70 l/min**	Max flow: **130 l/min**
Max pressure: **350 bar**	Max pressure: **315 bar**

1 MODEL CODE

DLHZO	-	T	-	0	40	-	L	7	3	/	*	*	/	*

DLHZO = size 06
DLKZOR = size 10

T = with LVDT transducer

Valve size ISO 4401:
0 = 06 **1** = 10

Configuration:

Standard

40 =

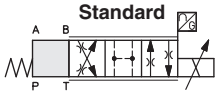

Option **/B**

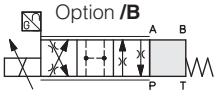

with fail safe configuration 1 or 3

60 =

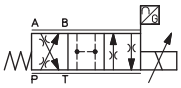

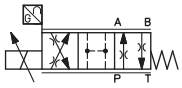

without fail safe

Spool type, regulating characteristics:

L = linear

V = progressive

T = not linear **(1)**

D = differential-linear **(1)**

P-A = Q, B-T = Q/2
P-B = Q/2, A-T = Q

DT = differential-not linear **(1)**

P-A = Q, B-T = Q/2
P-B = Q/2, A-T = Q

(1) Not available for configuration **60**
(2) Possible combined options: /BY

Hydraulic options (2):
B = solenoid and LVDT transducer at side of port A
Y = external drain

Fail safe configuration, see section 8:

1 =

3 =

Note: select **1** for configuration **60** even without fail safe

Seals material, see section 6:
- = NBR
PE = FKM
BT = HNBR

Series number

Spool size:	**0**(L)	**1**(L)	**1**(V)	**3**(L)	**3**(T)	**3**(V)	**5**(L,T)	**7**(L,T,V,D,DT)
DLHZO =	4	7	12	14	-	20	28	40
DLKZOR =	-	-	-	60	60	-	-	100

Nominal flow (l/min) at Δp 70bar P-T

2 OFF-BOARD ELECTRONIC DRIVERS

Please include in the driver order also the complete code of the connected proportional valve.

Drivers model	E-BM-TEB	E-BM-TES	Z-BM-TEZ
Type	Digital	Digital	Digital
Format	DIN-rail panel	DIN-rail panel	DIN-rail panel
Tech table	GS230	GS240	GS330

3 GENERAL CHARACTERISTICS

Assembly position	Any position
Subplate surface finishing to ISO 4401	Acceptable roughness index: Ra ≤ 0,8, recommended Ra 0,4 – Flatness ratio 0,01/100
MTTFd valves according to EN ISO 13849	150 years, see technical table P007
Ambient temperature range	**Standard** = -20°C ÷ +60°C **/PE** option = -20°C ÷ +60°C **/BT** option = -40°C ÷ +60°C
Storage temperature range	**Standard** = -20°C ÷ +70°C **/PE** option = -20°C ÷ +70°C **/BT** option = -40°C ÷ +70°C
Surface protection	Zinc coating with black passivation
Corrosion resistance	Salt spray test (EN ISO 9227) > 200 h
Compliance	CE according to EMC directive 2014/30/EU (Immunity: EN 61000-6-2; Emission: EN 61000-6-3) RoHS Directive 2011/65/EU as last update by 2015/863/EU REACH Regulation (EC) n°1907/2006

4 HYDRAULIC CHARACTERISTICS - based on mineral oil ISO VG 46 at 50 °C

Valve model	**DLHZO**												**DLKZOR**						
Pressure limits [bar]	ports **P**, **A**, **B** = 350; **T** = 210 (250 with external drain /Y) **Y** = 10												ports **P**, **A**, **B** = 315; **T** = 210 (250 with external drain /Y) **Y** = 10						
Spool type	**L0**	**L1**	**V1**	**L3**	**V3**	**L5**	**T5**	**L7**	**T7**	**V7**	**D7**	**DT7**	**L3**	**T3**	**L7**	**T7**	**V7**	**D7**	**DT7**
Nominal flow Δp P-T [l/min] **(1)** Δp= 30 bar	2,5	4,5	8	9	13	18		26			26÷13 **(4)**		40		60			60÷33 **(4)**	
Δp= 70 bar	4	7	12	14	20	28		40			40÷20 **(4)**		60		100			100÷50 **(4)**	
Max permissible flow	8	14	16	30	40	50		70			70÷40 **(4)**		110		130			130÷65 **(4)**	
Leakage **(2)** [cm³/min]	<100	<200	<100	<300	<150	<500	<200	<900	<200	<200	<700	<200	<1000	<400	<1500	<400	<400	<1200	<400
Response time **(3)** [ms]	≤ 10												≤ 15						
Hysteresis	≤ 0,1 [% of max regulation]																		
Repeatibility	± 0,1 [% of max regulation]																		
Thermal drift	zero point displacement < 1% at ΔT = 40°C																		

(1) For different Δp, the max flow is in accordance to the diagrams in section 7.2
(2) Referred to spool in neutral position and 50°C oil temperature
(3) 0-100% step signal
(4) For spool type D7 and DT7 the flow value is referred to single path P-A (A-T) ÷ P-B (B-T) at Δp/2 per control edge

5 ELECTRICAL CHARACTERISTICS

Max power consumption	30 W
Max. solenoid current	**DLHZO** = 2,6 A **DLKZOR** = 3 A
Coil resistance R at 20°C	**DLHZO** = 3 ÷ 3,3 Ω **DLKZOR** = 2,2 ÷ 2,4 Ω
Insulation class	H (180°) Due to the occuring surface temperatures of the solenoid coils, the European standards ISO 13732-1 and EN982 must be taken into account
Protection degree to DIN EN60529	IP65 with mating connectors
Duty factor	Continuous rating (ED=100%)

6 SEALS AND HYDRAULIC FLUIDS - for other fluids not included in below table, consult our technical office

Seals, recommended fluid temperature	NBR seals (standard) = -20°C ÷ +80°C, with HFC hydraulic fluids = -20°C ÷ +50°C FKM seals (/PE option) = -20°C ÷ +80°C HNBR seals (/BT option) = -40°C ÷ +60°C, with HFC hydraulic fluids = -40°C ÷ +50°C	
Recommended viscosity	20÷100 mm²/s - max allowed range 15 ÷ 380 mm²/s	
Max fluid contamination level — normal operation	ISO4406 class 18/16/13 NAS1638 class 7	see also filter section at www.atos.com or KTF catalog
Max fluid contamination level — longer life	ISO4406 class 16/14/11 NAS1638 class 5	

Hydraulic fluid	**Suitable seals type**	**Classification**	**Ref. Standard**
Mineral oils	NBR, FKM, HNBR	HL, HLP, HLPD, HVLP, HVLPD	DIN 51524
Flame resistant without water	FKM	HFDU, HFDR	ISO 12922
Flame resistant with water	NBR, HNBR	HFC	

7 DIAGRAMS (based on mineral oil ISO VG 46 at 50 °C)

7.1 Regulation diagrams

1 = Linear spools L
2 = Differential - linear spool D7

3 = Differential non linear spool DT7
4 = Non linear spool T5 (only for DLHZO)

5 = Non linear spool T3 (only for DLKZOR) and T7
6 = Progressive spool V

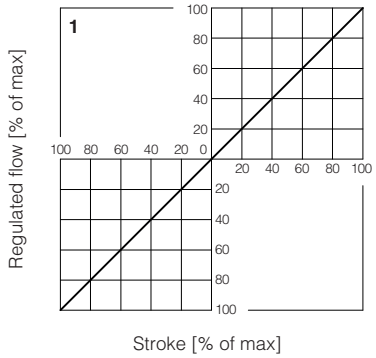

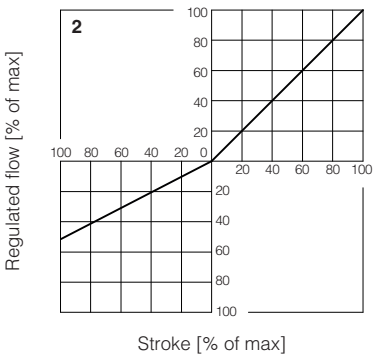

T3, T5 and T7 spool types are specific for fine low flow control in the range from 0 to 60% (T5) and 0 to 40% (T3, T7) of max spool stroke.
The non linear characteristics of the spool is compensated by the electronic driver, so the final valve regulation is resulting linear respect the reference signal (dotted line).

DT7 has the same characteristic of T7 but it is specific for applications with cylinders with area ratio 1:2

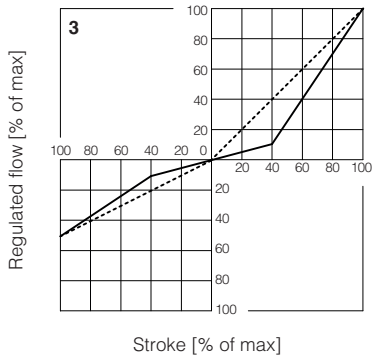

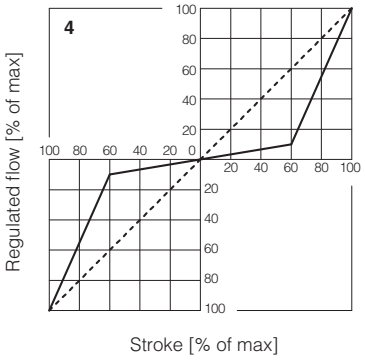

Note:
Hydraulic configuration vs. reference signal:

Standard:
Reference signal 0 ÷ +10 V / 12 ÷ 20 mA } P → A / B → T

Reference signal 0 ÷ -10 V / 12 ÷ 4 mA } P → B / A → T

option /B:
Reference signal 0 ÷ +10 V / 12 ÷ 20 mA } P → B / A → T

Reference signal 0 ÷ -10 V / 12 ÷ 4 mA } P → A / B → T

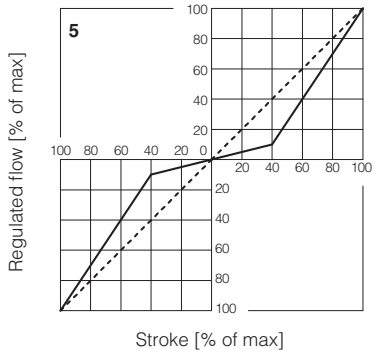

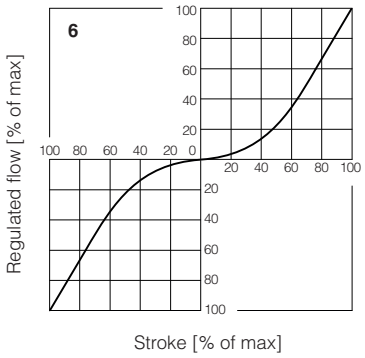

7.2 Flow /Δp diagrams

Stated at 100% of spool stroke

DLHZO:
1 = spool L7, T7, V7, D7, DT7
2 = spool L5, T5
3 = spool V3
4 = spool L3
5 = spool L1, V1
6 = spool L0

DLKZOR:
7 = spool L7, T7, V7, D7, DT7
8 = spool L3

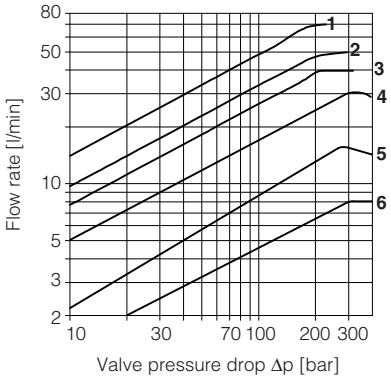

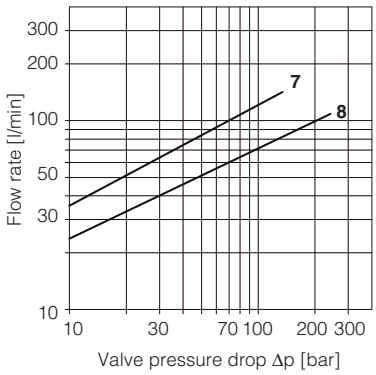

7.3 Pressure gain

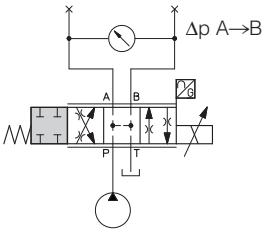

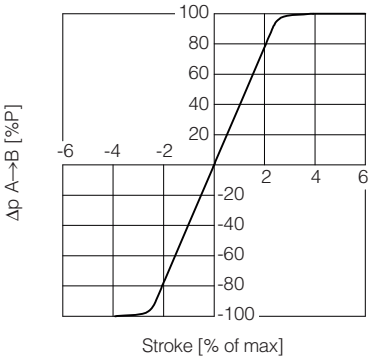

7.4 Response time

The response times in below diagrams are measured at different steps of the reference input signal. They have to be considered as average values. For the valves with digital electronics the dynamics performances can be optimized by setting the internal software parameters.

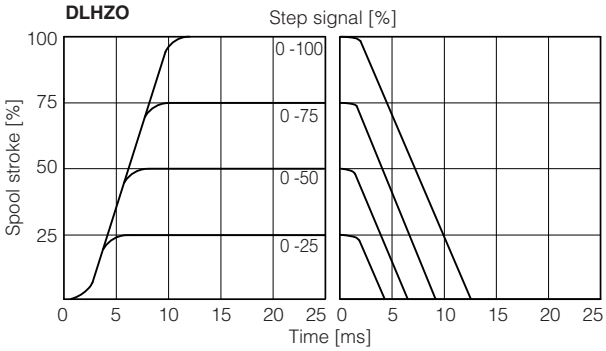

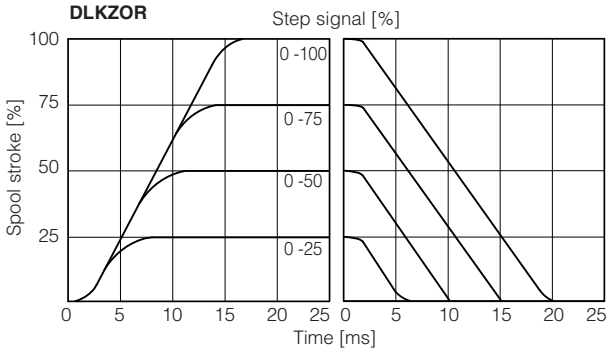

7.5 Bode diagrams

Stated at nominal hydraulic conditions

DLHZO:
1 = ± 100% nominal stroke
2 = ± 5% nominal stroke

DLKZOR:
3 = ± 100% nominal stroke
4 = ± 5% nominal stroke

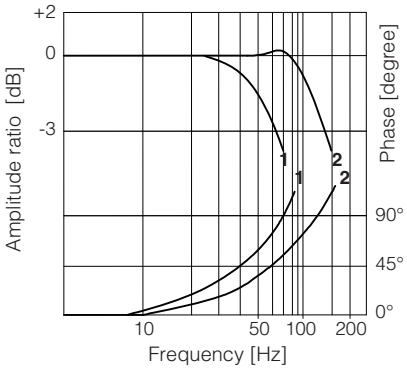

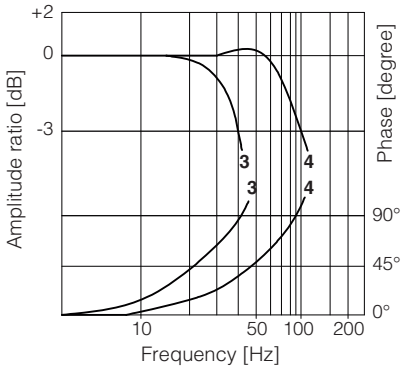

8 FAIL SAFE POSITION

CONFIGURATION	LINEAR	NOT LINEAR
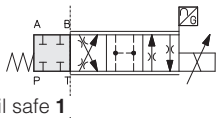 fail safe **1**	**t** = 7-10 ms (DLHZO) **t** = 15-20 ms (DLKZOR) 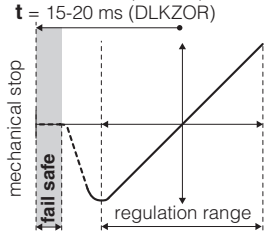	**t** = 7-10 ms (DLHZO) **t** = 15-20 ms (DLKZOR) 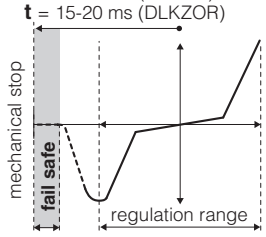
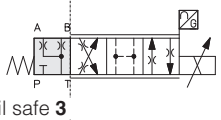 fail safe **3**	**t** = time required by the valve to switch from central to fail safe position at the power switch-off, with pressure 0 to 100 bar	
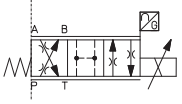 without fail safe	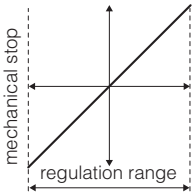	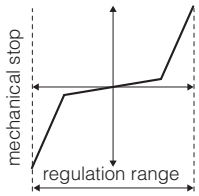

Fail safe connections		P → A	P → B	A → T	B → T
Leakage [cm³/min] at P = 100 bar **(1)**	Fail safe 1	50	70	70	50
	Fail safe 3	50	70	-	-
Flow [l/min] **(2)** DLHZO	Fail safe 3	-	-	15÷30	10÷20
Flow [l/min] **(2)** DLKZOR	Fail safe 3	-	-	40÷60	25÷40

(1) Referred to spool in fail safe position and 50°C oil temperature **(2)** Referred to spool in fail safe position at Δp = 35 bar per edge

9 HYDRAULIC OPTIONS

B = Solenoid and position transducer at side of port A of the main stage. For hydraulic configuration vs reference signal, see 7.1

Y = This option is mandatory if the pressure in port T exceeds 210 bar.

10 ELECTRICAL CONNECTION

10.1 Solenoid connector - supplied with the valve

PIN	SIGNAL	TECHNICAL SPECIFICATION	Connector code 666
1	**COIL**	Power supply	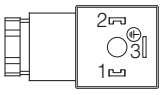
2	**COIL**	Power supply	
3	**GND**	Ground	

10.2 LVDT transducer connector - supplied with the valve

PIN	SIGNAL	TECHNICAL SPECIFICATION	Connector code 345
1	**TR**	Output signal	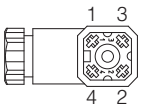
2	**VT-**	Power supply -15VDC	
3	**VT+**	Power supply +15VDC	
4	**GND**	Ground	

11 FASTENING BOLTS AND SEALS

	DLHZO	DLKZOR
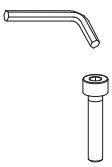	**Fastening bolts:** 4 socket head screws M5x50 class 12.9 Tightening torque = 8 Nm	**Fastening bolts:** 4 socket head screws M6x40 class 12.9 Tightening torque = 15 Nm
	Seals: 4 OR 108; Diameter of ports A, B, P, T: Ø 7,5 mm (max) 1 OR 2025 Diameter of port Y: Ø = 3,2 mm (only for /Y option)	**Seals:** 5 OR 2050; Diameter of ports A, B, P, T: Ø 11,2 mm (max) 1 OR 108 Diameter of port Y: Ø = 5 mm (only for /Y option)

12 INSTALLATION DIMENSIONS [mm]

DLHZO-T

ISO 4401: 2005
Mounting surface: 4401-03-02-0-05 (see table P005)
(for /Y surface 4401-03-03-0-05 without X port)

Mass [kg]	
DLHZO	2,3

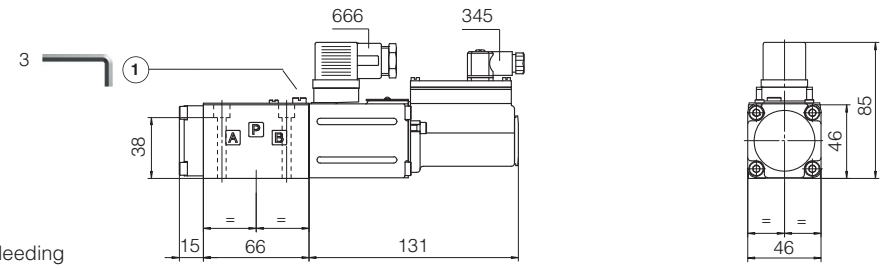

1 = Air bleeding

DLKZOR-T

ISO 4401: 2005
Mounting surface: 4401-05-04-0-05 (see table P005)
(for /Y surface 4401-05-05-0-05 without X port)

Mass [kg]	
DLKZOR	4,3

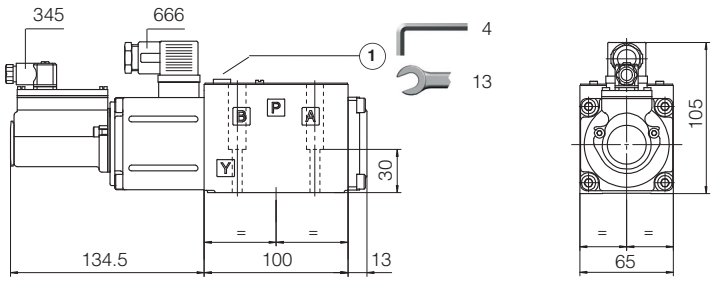

1 = Air bleeding

Note: for option /B the solenoid and the LVDT transducer are at side of port A

13 RELATED DOCUMENTATION

FS001	Basics for digital electrohydraulics	**GS500**	Programming tools
FS900	Operating and maintenance information for proportional valves	**GS510**	Fieldbus
GS230	E-BM-TEB digital driver	**K800**	Electric and electronic connectors
GS240	E-BM-TES digital driver	**P005**	Mounting surfaces for electrohydraulic valves
GS330	Z-BM-TEZ digital axis card		

Digital servoproportional directional valves

direct, with on-board driver, LVDT transducer and zero spool overlap

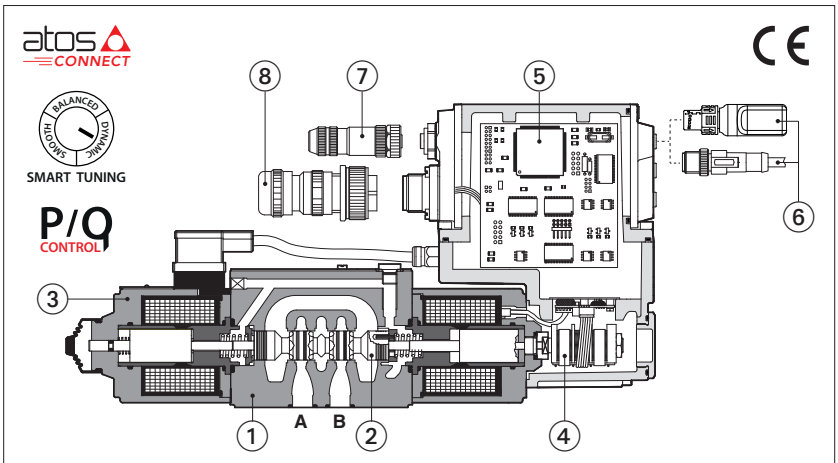

DKZOR-TES-SN-BC-170

① Valve body
② Spool
③ Proportional solenoid
④ LVDT transducer
⑤ On-board digital driver
⑥ Bluetooth/USB connection
⑦ Fieldbus connectors
⑧ Main connector

DHZO-TEB, DHZO-TES DKZOR-TEB, DKZOR-TES

Digital servoproportional directional valves, direct, with LVDT position transducer and zero spool overlap for position closed loop controls. The double solenoid construction involves larger flows and central safety rest position.

TEB basic execution with analog reference signal or IO-Link interface for digital reference signals, valve settings, and real-time diagnostics.

TES full execution which includes also optional alternated p/Q controls and fieldbus interfaces for digital reference signals, valve settings, and real-time diagnostics.

Bluetooth/USB connection is always present for valve settings via mobile App and Atos PC software.

Digital TEZ version (see tech. table FS620) integrates on-board driver and axis card, while TEB-SN-NP and TES versions can be used in combination with Z-BM-KZ off-board axis card (see tech. table GS340).

DHZO:	**DKZOR**:
Size: **06** - ISO 4401	Size: **10** - ISO 4401
Max flow: **80 l/min**	Max flow: **180 l/min**
Max pressure: **350 bar**	Max pressure: **315 bar**

1 MODEL CODE

DHZO - TES - SN - NP - 0 70 - L 5 / * / * / * * / *

Servoproportional directional valves, direct
DHZO = size 06
DKZOR = size 10

TEB = basic on-board digital driver
TES = full on-board digital driver

Alternated p/Q controls, see section 8 :
SN = none
Only for TES:
SP = pressure control (1 pressure transducer)
SF = force control (2 pressure transducers)
SL = force control (1 load cell)

IO-Link interface, only for TEB, see section 6 :
NP = Not present **IL** = IO-Link

Fieldbus interfaces, only for TES, see section 7 :
NP = Not present
BC = CANopen **EW** = POWERLINK
BP = PROFIBUS DP **EI** = EtherNet/IP
EH = EtherCAT **EP** = PROFINET RT/IRT

Valve size ISO 4401: **0** = 06 **1** = 10

Configuration:

Standard Option **/B**

70 =

(1) For possible combined options, see section 17

Spool type, regulating characteristics, see section 15 :
L = linear
D = differential-progressive
P-A = Q, B-T = Q/2
P-B = Q/2, A-T = Q

Spool size:

	3 (L)	**5** (L,D)
DHZO =	18	28
DKZOR =	45	75

Nominal flow (l/min) at Δp 10bar P-T (see section 12)

Hydraulic options (1):
B = solenoid with on-board digital driver and LVDT transducer at side of port A
Y = external drain

Electronic options (1), not available for TEB-SN-IL:
C = current feedback for pressure transducer 4÷20mA (only for TES-SP, SF, SL)
F = fault signal
I = current reference input and monitor 4÷20mA
Q = enable signal
Z = double power supply (only for TES), enable, fault and monitor signals - 12 pin connector

Bluetooth option (2), see section 4 :
T = Bluetooth adapter supplied with the valve

Safety options TÜV certified - only for TES **(2)**:
U = safe double power supply
K = safe on/off signals
See section 10

SAFETY CERTIFIED

Series number

Seals material, see section 13 :
- = NBR
PE = FKM
BT = NBR low temperature

2 GENERAL NOTES

Atos digital proportionals valves are CE marked according to the applicable directives (e.g. Immunity and Emission EMC Directive).
Installation, wirings and start-up procedures must be performed according to the general prescriptions shown in tech table **FS900** and in the user manuals included in the E-SW-SETUP programming software.

3 VALVE SETTINGS AND PROGRAMMING TOOLS - see tech. table GS500

3.1 Atos CONNECT mobile App

Free downloadable App for smartphones and tablets which allows quick access to valve main functional parameters and basic diagnostic information via Bluetooth, thus avoiding physical cable connection and significantly reducing commissioning time.
Atos CONNECT supports Atos digital valve drivers equipped with E-A-BTH adapter or with built-in Bluetooth. It does not support valves with p/Q control or axis controls.

Download on the App Store

GET IT ON Google Play

3.2 E-SW-SETUP PC software

Free downloadable software for PC allows to set all valve functional parameters and to access complete diagnostic information of digital valve drivers via Bluetooth/USB service port.
Atos E-SW-SETUP PC software supports all Atos digital valve drivers and it is available at www.atos.com in MyAtos area.

WARNING: drivers USB port is not isolated! For E-C-SB-USB/M12 cable, the use of E-A-SB-USB/OPT isolator adapter is highly recommended for PC protection

Bluetooth or USB connection

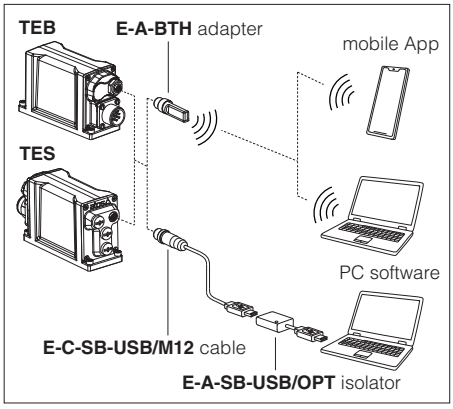

4 BLUETOOTH OPTION - see tech. table GS500

T option adds Bluetooth® connectivity to Atos valve drivers thanks to E-A-BTH adapter, which can be left permanently installed on-board, to allow the Bluetooth connection with the valve drivers at any time. E-A-BTH adapter can also be purchased separately and used to connect with any supported Atos digital product.
Bluetooth connection to the valve can be protected against unauthorised access by setting a personal password. The adapter leds visually indicates the status of valve driver and Bluetooth connection.

WARNING: for the list of countries where the Bluetooth adapter has been approved, see tech. table **GS500**
T option is not available for the Indian market, so the Bluetooth adapter must be ordered separately.

5 SMART TUNING

Smart tuning allows to adjust the valve dynamic response in order to match different performance requirements.

The valve is provided with 3 factory settings for the spool control:
- **dynamic** fast response time and high sensitivity for best dynamic performances. Default factory setting for directional valves
- **balanced** average response time and sensitivity suitable for major applications
- **smooth** attenuated response time and sensitivity to improve control stability in critical applications or in environments with electrical disturbances

Smart tuning setting can be switched from Dynamic (default) to Balanced or Smooth via software or fieldbus; if requested, performances can be further customized directly tuning each single control parameter. For details consult related manuals E-MAN-RI-* and Quickstart, see section 27.

For Response time and Bode diagrams see section 15.

6 IO-LINK - only for TEB, see tech. table GS520

IO-Link allows low cost digital communication between the valve and machine central unit. The valve is directly connected to a port of an IO-Link master (point-to-point connection) via low-cost unshielded cables for digital reference, diagnostic and settings. The IO-Link master works as a hub exchanging this information with the machine central unit via fieldbus.

7 FIELDBUS - only for TES, see tech. table GS510

Fieldbus allows valve direct communication with machine control unit for digital reference, valve diagnostics and settings. These execution allow to operate the valves through fieldbus or analog signals available on the main connector.

8 ALTERNATED p/Q CONTROLS - only for TES, see tech. table FS500

S* options add the closed loop control of pressure (**SP**) or force (**SF** and **SL**) to the basic functions of proportional directional valves flow regulation. A dedicated algorithm alternates pressure (force) depending on the actual hydraulic system conditions.
An additional connector is available for transducers to be interfaced to the valve's driver (1 pressure transducer for SP, 2 pressure transducers for SF or 1 load cell for SL). The alternated pressure control (SP) is possible only for specific installation conditions.
Main 12 pin connector is the same as /Z option plus two analog signals specific for the pressure (force) control.

9 AXIS CONTROLLER - see tech. table FS620

Digital servoproportional with on-board electronics **TEZ** include valve's driver plus axis controller, performing position closed loop of any hydraulic actuator equipped with analog, encoder or SSI position transducer. S* option add alternated p/Q control to the basic position ones.
Atos also supplies complete servoactuators integrating servocylinder, digital servoproportional valve and axis controller, fully assembled and tested. For more information consult Atos Technical Office.

10 SAFETY OPTIONS - only for TES

Atos range of proportional directional valves, provides functional safety options **/U** and **/K** , designed to accomplish a safety function, intended to reduce the risk in process control systems.

SAFETY CERTIFIED

They are **TÜV certified** in compliance to **IEC 61508 up to SIL 3 and ISO 13849 up to category 4, PL e**

Safe double power supply, option **/U**: the driver has separate power supplies for logic and solenoids. The safe condition is reached by cutting the electrical supply to solenoids, while electronics remains active for monitoring functions and fieldbus communication, see tech table **FY100**

Safety function via on/off signals, option **/K**: upon a disable command, the driver checks the spool position and it provides an on/off acknowledgement signal only when the valve is in safe condition, see tech table **FY200**

11 GENERAL CHARACTERISTICS

Assembly position	Any position
Subplate surface finishing to ISO 4401	Acceptable roughness index: Ra ≤0,8, recommended Ra 0,4 – Flatness ratio 0,01/100
MTTFd valves according to EN ISO 13849	150 years, for further details see technical table P007
Ambient temperature range	**Standard** = -20°C ÷ +60°C **/PE** option = -20°C ÷ +60°C **/BT** option = -40°C ÷ +60°C
Storage temperature range	**Standard** = -20°C ÷ +70°C **/PE** option = -20°C ÷ +70°C **/BT** option = -40°C ÷ +70°C
Surface protection	Zinc coating with black passivation, galvanic treatment (driver housing)
Corrosion resistance	Salt spray test (EN ISO 9227) > 200 h
Vibration resistance	See technical table G004
Compliance	CE according to EMC directive 2014/30/EU (Immunity: EN 61000-6-2; Emission: EN 61000-6-3) RoHS Directive 2011/65/EU as last update by 2015/863/EU REACH Regulation (EC) n°1907/2006

12 HYDRAULIC CHARACTERISTICS - based on mineral oil ISO VG 46 at 50 °C

Valve model	DHZO			DKZOR		
Pressure limits [bar]	ports **P**, **A**, **B** = 350; **T** = 210 (250 with external drain /Y) **Y** = 10			ports **P**, **A**, **B** = 315; **T** = 210 (250 with external drain /Y) **Y** = 10		
Spool type and size	**L3**	**L5**	**D5**	**L3**	**L5**	**D5**
Nominal flow Δp P-T [l/min] **(1)** Δp= 10 bar	18	28	28 **(4)**	45	75	75 **(4)**
Δp= 30 bar	30	50	50 **(4)**	80	130	130 **(4)**
Δp= 70 bar	45	75	75 **(4)**	120	170	170 **(4)**
Max permissible flow **(2)**	50	80	80 **(4)**	130	180	180 **(4)**
Leakage [cm³/min]	<500 (at p = 100 bar); <1500 (at p = 350 bar)			<800 (at p = 100 bar); <2500 (at p = 315 bar)		
Response time **(3)** [ms]	≤ 15			≤ 20		
Hysteresis	≤ 0,2 [% of max regulation]					
Repeatability	± 0,1 [% of max regulation]					
Thermal drift	zero point displacement < 1% at ΔT = 40°C					

(1) For different Δp, the max flow is in accordance to the diagrams in section 15.2
(2) See detailed diagrams in section 15.3
(3) 0-100% step signal
(4) For spool type D5 the flow value is referred to single path P-A (A-T) at Δp/2 per control edge. The flow P-B (B-T) is 50% of P-A (A-T)

13 ELECTRICAL CHARACTERISTICS

Power supplies	Nominal : +24 VDC Rectified and filtered : VRMS = 20 ÷ 32 VMAX (ripple max 10 % VPP)				
Max power consumption	50 W				
Max. solenoid current	**DHZO** = 2,6 A **DKZOR** = 3 A				
Coil resistance R at 20°C	**DHZO** = 3 ÷ 3,3 Ω **DKZOR** = 3,8 ÷ 4,1 Ω				
Analog input signals	Voltage: range ±10 VDC (24 VMAX tolerant) Input impedance: Ri > 50 kΩ Current: range ±20 mA Input impedance: Ri = 500 Ω				
Monitor outputs	Output range: voltage ±10 VDC @ max 5 mA current ±20 mA @ max 500 Ω load resistance				
Enable input	Range: 0 ÷ 5 VDC (OFF state), 9 ÷ 24 VDC (ON state), 5 ÷ 9 VDC (not accepted); Input impedance: Ri > 10 kΩ				
Fault output	Output range: 0 ÷ 24 VDC (ON state > [power supply - 2 V] ; OFF state < 1 V) @ max 50 mA; external negative voltage not allowed (e.g. due to inductive loads)				
Pressure/Force transducer power supply (only for SP, SF, SL)	+24VDC @ max 100 mA (E-ATR-8 see tech table **GS465**)				
Alarms	Solenoid not connected/short circuit, cable break with current reference signal, over/under temperature, valve spool transducer malfunctions, alarms history storage function				
Insulation class	H (180°) Due to the occurring surface temperatures of the solenoid coils, the European standards ISO 13732-1 and EN982 must be taken into account				
Protection degree to DIN EN60529	IP66 / IP67 with mating connectors				
Duty factor	Continuous rating (ED=100%)				
Tropicalization	Tropical coating on electronics PCB				
Additional characteristics	Short circuit protection of solenoid's current supply; 3 leds for diagnostic (only for TES); spool position control (SN) or pressure/force control (SP, SF, SL) by P.I.D. with rapid solenoid switching; protection against reverse polarity of power supply				
Communication interface	USB Atos ASCII coding	IO-Link Interface and System Specification 1.1.3	CANopen EN50325-4 + DS408	PROFIBUS DP EN50170-2/IEC61158	EtherCAT POWERLINK EtherNet/IP PROFINET IO RT/IRT IEC 61158
Communication physical layer	not insulated USB 2.0+USB OTG	SDCI class port B	optical insulated CAN ISO11898	optical insulated RS485	Fast Ethernet, insulated 100 Base TX
Recommended wiring cable	LiYCY shielded cables, see section 24				

Note: a maximum time of 800 ms (depending on communication type) has to be considered between the driver energizing with the 24 VDC power supply and when the valve is ready to operate. During this time the current to the valve coils is switched to zero.

14 SEALS AND HYDRAULIC FLUIDS - for other fluids not included in below table, consult our technical office

Seals, recommended fluid temperature	NBR seals (standard) = -20°C ÷ +60°C, with HFC hydraulic fluids = -20°C ÷ +50°C FKM seals (/PE option) = -20°C ÷ +80°C NBR low temp. seals (/BT option) = -40°C ÷ +60°C, with HFC hydraulic fluids = -20°C ÷ +50°C		
Recommended viscosity	20÷100 mm²/s - max allowed range 15 ÷ 380 mm²/s		
Max fluid contamination level — normal operation	ISO4406 class 18/16/13 NAS1638 class 7		see also filter section at www.atos.com or KTF catalog
Max fluid contamination level — longer life	ISO4406 class 16/14/11 NAS1638 class 5		
Hydraulic fluid	**Suitable seals type**	**Classification**	**Ref. Standard**
Mineral oils	NBR, FKM, NBR low temp.	HL, HLP, HLPD, HVLP, HVLPD	DIN 51524
Flame resistant without water	FKM	HFDU, HFDR	ISO 12922
Flame resistant with water	NBR, NBR low temp.	HFC	

15 DIAGRAMS - based on mineral oil ISO VG 46 at 50 °C

15.1 Regulation diagrams (values measure at Δp 30 bar P-T)

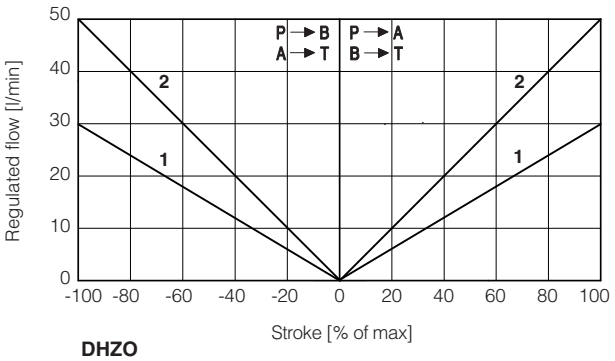

DHZO
1 = L3 **2** = L5

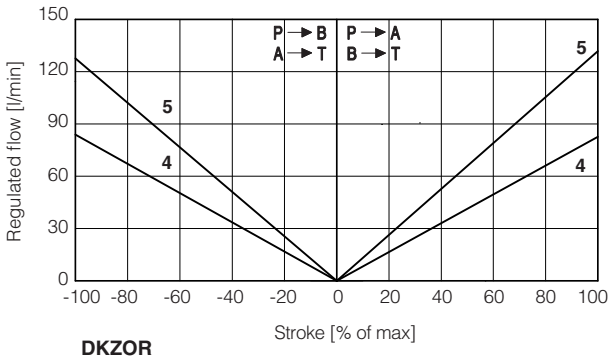

DKZOR
4 = L3 **5** = L5

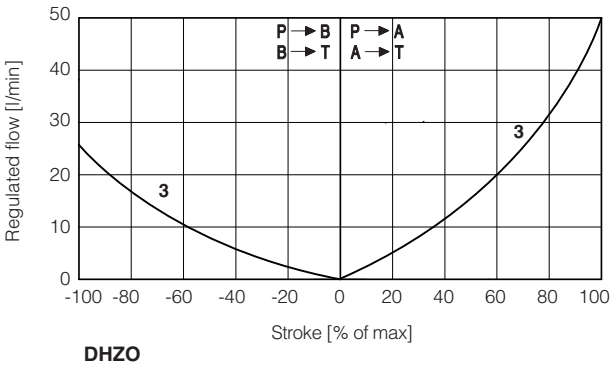

DHZO
3 = D5

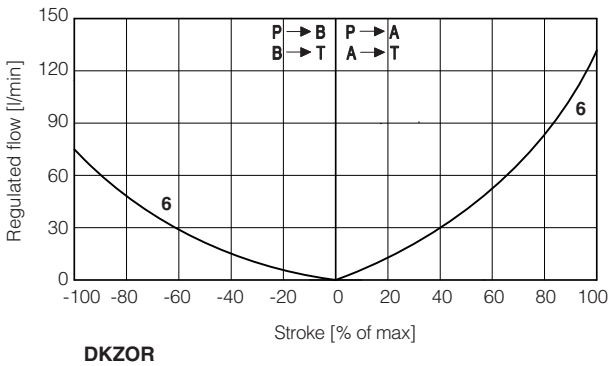

DKZOR
6 = D5

Note:
Hydraulic configuration vs. reference signal for configurations 70 (standard and option /B)

Reference signal $\left.\begin{matrix}0 \div +10\ V\\ 12 \div 20\ mA\end{matrix}\right\}$ P → A / B → T Reference signal $\left.\begin{matrix}0 \div -10\ V\\ 12 \div 4\ mA\end{matrix}\right\}$ P → B / A → T

15.2 Flow /Δp diagrams
stated at 100% of valve stroke

DHZO
1 = spool L3,
2 = spool L5, D5

DKZOR
3 = spool L3
4 = spool L5, D5

DHZO

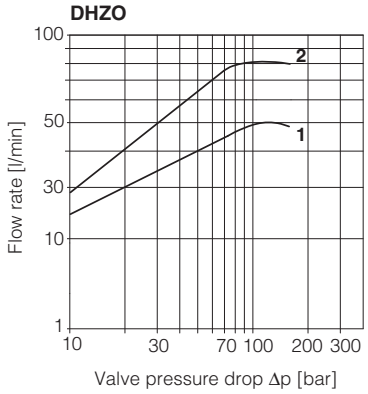

DKZOR

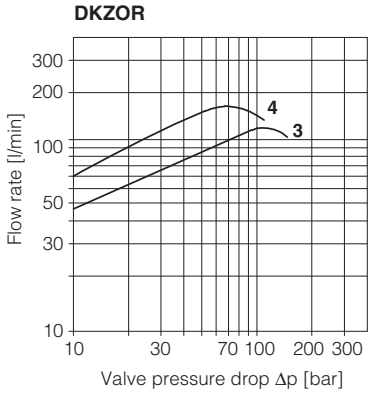

15.3 Operating limits

DHZO

1 = spool L3
2 = spool L5, D5

DKZOR

3 = spool L3
4 = spool L5, D5

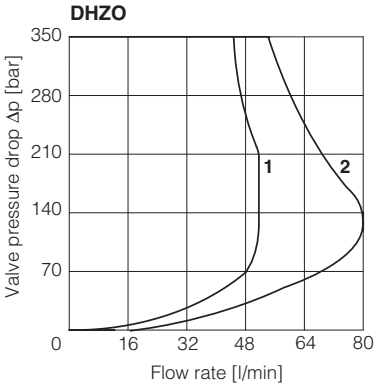

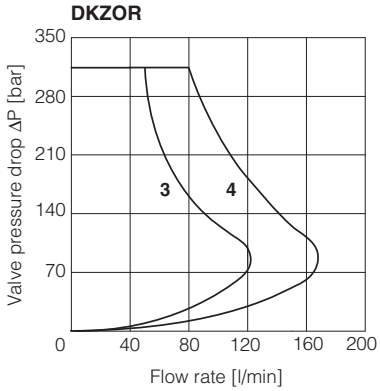

15.4 Response time

The response times in below diagrams are measured at different steps of the reference input signal. They have to be considered as average values.

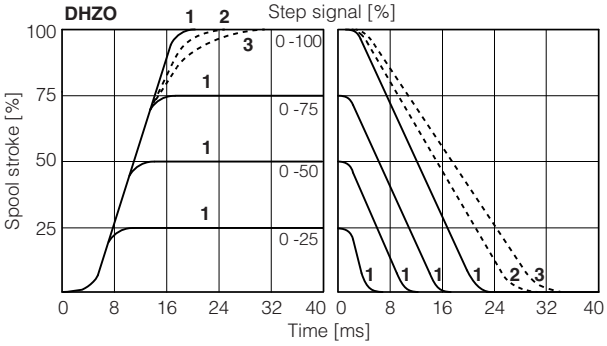

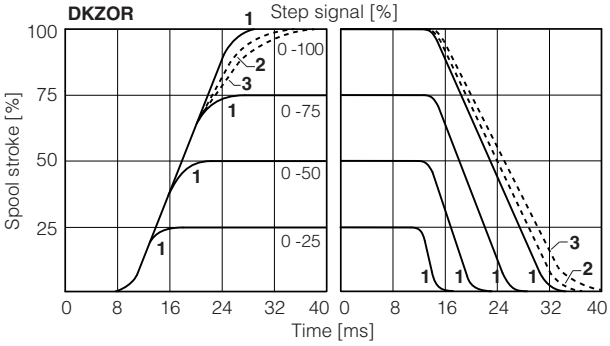

1 = dynamic **2** = balanced (*) **3** = smooth (*)

(*) Response time is represented only for 0-100% step; for intermediate steps, the response time increment of presets 2 (balanced) and 3 (smooth) with respect to the preset 1 (dynamic) is proportional to the step amplitude of the reference input signal

15.5 DHZO Bode diagrams

Stated at nominal hydraulic conditions

± 5% nominal stroke:
1 = dynamic
2 = balanced
3 = smooth

± 100% nominal stroke:
4 = dynamic
5 = balanced
6 = smooth

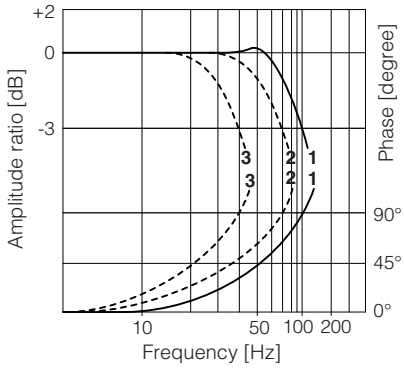

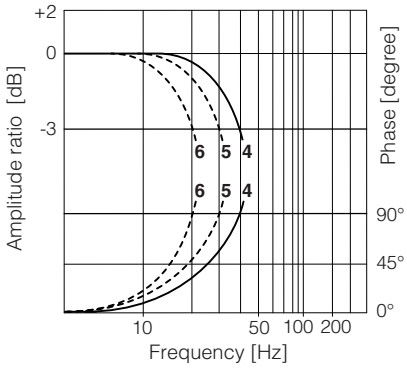

15.6 DKZOR Bode diagrams

Stated at nominal hydraulic conditions

± 5% nominal stroke:
1 = dynamic
2 = balanced
3 = smooth

± 100% nominal stroke:
4 = dynamic
5 = balanced
6 = smooth

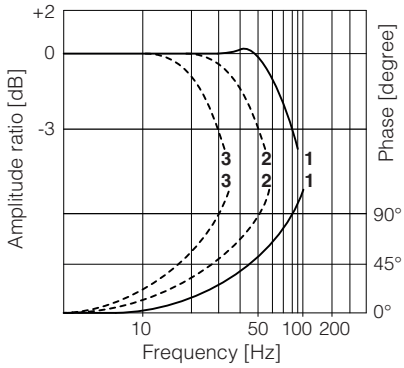

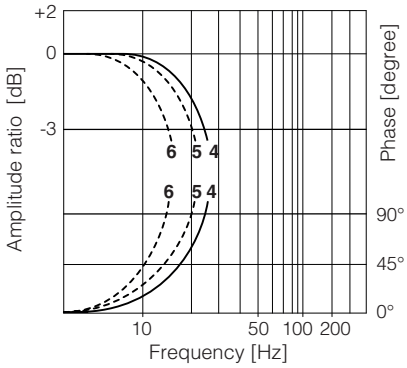

16 HYDRAULIC OPTIONS

B = Solenoid, on-board digital driver and position transducer at side of port A of the main stage. For hydraulic configuration vs reference signal, see 15.1

Y = This option is mandatory if the pressure in port T exceeds 210 bar.

17 ELECTRONIC OPTIONS - not available for TEB-SN-IL

F = This option permits to monitor the eventual fault condition of the driver, as for example the solenoid short circuit/not connected, reference signal cable broken for option /I, spool position transducer broken, etc. - see 20.9 for signal specifications.

I = This option provides 4 ÷ 20 mA current reference and monitor signals, instead of the standard ±10 VDC.
Input signal can be reconfigured via software selecting between voltage and current, within a maximum range of ±10 VDC or ±20 mA.
It is normally used in case of long distance between the machine control unit and the valve or where the reference signal can be affected by electrical noise; the valve functioning is disabled in case of reference signal cable breakage.

Q = This option permits to inhibit the valve function without removing the power supply to the driver. Upon disable command the current to the solenoid is zeroed and the valve's spool moves to rest position.
The option /Q is suggested for all cases where the valve has to be frequently inhibited during the machine cycle – see 20.7 for signal specifications.

Z = This option provides, on the 12 pin main connector, the following additional features:
Fault output signal - see above option **/F**
Enable input signal - see above option **/Q**
Repeat enable output signal - only for **TEB-SN-NP** (see 20.8)
Power supply for driver's logics and communication - only for **TES** (see 20.2)

C = This option is available to connect pressure (force) transducers with 4 ÷ 20 mA current output signal, instead of the standard ±10 VDC.
Input signal can be reconfigured via software selecting between voltage and current, within a maximum range of ±10 VDC or ±20 mA.

18 POSSIBLE COMBINED OPTIONS

Standard versions for **TEB-SN-NP** and **TES-SN**:
/BF, /BFI, /BFIY, /BFY, /BI, /BIQ, /BIQY, /BIY, /BIYZ, /BIZ, /BQ,
/BQY /BY, /BYZ, /BZ,
/FI, /FIY, /FY,
/IQ, /IQY, /IY, /IYZ, /IZ,
/QY, /YZ

Standard versions for **TEB-SN-IL**:
/BY

Standard versions for **TES-SP, SF, SL**:
/BC, /BCI, /BCIY, /BCY, /BI, /BIY, /BY,
/CI, /CIY, /CY,
/IY

Safety certified versions for **TES-SN**:
/BI/U, /BIY/U, /B/U, /BY/U, /I/U, /IY/U, /Y/U
/BI/K, /BIY/K, /B/K, /BY/K, /I/K, /IY/K, /Y/K

Safety certified versions for **TES-SP, SF, SL**:
/BC/U, /BCI/U, /BCIY/U, /BCY/U, /BI/U, /BIY/U, /B/U, /BY/U,
/C/U, /CI/U, /CIY/U, /CY/U, /I/U, /IY/U, /Y/U
/BC/K, /BCI/K, /BCIY/K, /BCY/K, /BI/K, /BIY/K, /B/K, /BY/K,
/C/K, /CI/K, /CIY/K, /CY/K, /I/K, /IY/K, /Y/K

Note: **/T** Bluetooth adapter option can be combined with all other options

19 SAFETY REST POSITION - configuration 70

In absence of electric power supply (+24 VDC), the valve spool is moved by the springs force to the **safety rest position** characterized by a small offset of about 1% to 6% of the total stroke in P-B / A-T configuration.
This is specifically designed to avoid that in case of accidental interruption of the electrical power supply to the valve, the actuator moves towards an undefined direction (due to the tolerances of the zero overlap spool), with potential risk of damages or personnel injury.
Thanks to the **safety rest position** the actuator movement is suddenly stopped and it is recovered at very low speed towards the direction corresponding to the P-B/ A-T connection.
The spool moves to the closed loop control position (zero overlap) when the valve is fed with power supply +24 VDC and reference input = 0V (or 12 mA for option /I) is applied to the driver.

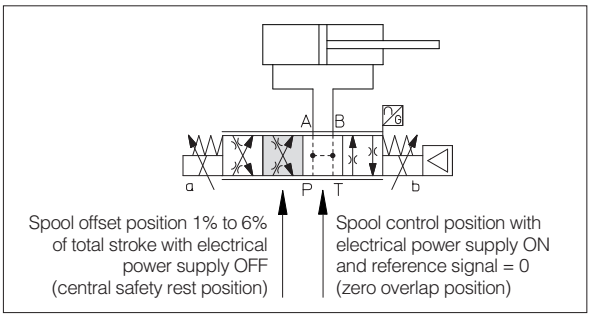

20 POWER SUPPLY AND SIGNALS SPECIFICATIONS

Generic electrical output signals of the valve (e.g. fault or monitor signals) must not be directly used to activate safety functions, like to switch-ON/OFF the machine's safety components, as prescribed by the European standards (Safety requirements of fluid technology systems and components-hydraulics, ISO 4413).

For **TEB-SN-IL** signals see section 21

For certified safety options: **/U** see tech. table **FY100** and **/K** see tech. table **FY200**

20.1 Power supply (V+ and V0)

The power supply must be appropriately stabilized or rectified and filtered: apply at least a 10000 μF/40 V capacitance to single phase rectifiers or a 4700 μF/40 V capacitance to three phase rectifiers. In case of separate power supply see 20.2.

⚠ A safety fuse is required in series to each power supply: 2,5 A time lag fuse.

20.2 Power supply for driver's logic and communication (VL+ and VL0) - only for **TES** with **/Z** option and for **TES-SP, SF, SL** with fieldbus

The power supply for driver's logic and communication must be appropriately stabilized or rectified and filtered: apply at least a 10000 μF/40 V capacitance to single phase rectifiers or a 4700 μF/40 V capacitance to three phase rectifiers.

The separate power supply for driver's logic on pin 9 and 10, allow to remove solenoid power supply from pin 1 and 2 maintaining active the diagnostics, USB and fieldbus communications.

⚠ A safety fuse is required in series to each driver's logic and communication power supply: 500 mA fast fuse.

20.3 Flow reference input signal (Q_INPUT+)

The driver controls in closed loop the valve spool position proportionally to the external reference input signal.

Reference input signal is factory preset according to selected valve code, defaults are ±10 VDC for standard and 4 ÷ 20 mA for /I option.

Input signal can be reconfigured via software selecting between voltage and current, within a maximum range of ±10 VDC or ± 20 mA.

Drivers with fieldbus interface can be software set to receive reference signal directly from the machine control unit (fieldbus reference).

Analog reference input signal can be used as on-off commands with input range 0 ÷ 24VDC.

20.4 Pressure or force reference input signal (F_INPUT+) - only for **TES-SP, SF, SL**

Functionality of F_INPUT+ signal (pin 7), is used as reference for the driver pressure/force closed loop (see tech. table **FS500**).

Reference input signal is factory preset according to selected valve code, defaults are ±10 VDC for standard and 4 ÷ 20 mA for /I option.

Input signal can be reconfigured via software selecting between voltage and current, within a maximum range of ±10 VDC or ± 20 mA.

Drivers with fieldbus interface can be software set to receive reference signal directly by the machine control unit (fieldbus reference).

Analog reference input signal can be used as on-off commands with input range 0 ÷ 24VDC.

20.5 Flow monitor output signal (Q_MONITOR) - not for **/F**

The driver generates an analog output signal proportional to the actual spool position of the valve; the monitor output signal can be software set to show other signals available in the driver (e.g. analog reference, fieldbus reference, pilot spool position).

Monitor output signal is factory preset according to selected valve code, defaults are ±10 VDC for standard and 4 ÷ 20 mA for /I option.

Output signal can be reconfigured via software selecting between voltage and current, within a maximum range of ±10 VDC or ± 20 mA.

20.6 Pressure or force monitor output signal (F_MONITOR) - only for **TES-SP, SF, SL**

The driver generates an analog output signal proportional to alternated pressure/force control; the monitor output signal can be software set to show other signals available in the driver (e.g. analog reference, force reference).

Monitor output signal is factory preset according to selected valve code, defaults are ±10 VDC for standard and 4 ÷ 20 mA for /I option.

Output signal can be reconfigured via software selecting between voltage and current, within a maximum range of ±10 VDC or ± 20 mA.

20.7 Enable input signal (ENABLE) - not for standard and **/F**

To enable the driver, supply a 24 VDC on pin 3 (pin C): Enable input signal allows to enable/disable the current supply to the solenoid, without removing the electrical power supply to the driver; it is used to active the communication and the other driver functions when the valve must be disabled for safety reasons. This condition **does not comply** with norms IEC 61508 and ISO 13849.

Enable input signal can be used as generic digital input by software selection.

20.8 Repeat enable output signal (R_ENABLE) - only for **TEB-SN-NP** with **/Z** option

Repeat enable is used as output repeater signal of enable input signal (see 20.7).

20.9 Fault output signal (FAULT) - not for standard and **/Q**

Fault output signal indicates fault conditions of the driver (solenoid short circuits/not connected, reference signal cable broken for 4 ÷ 20 mA input, spool position transducer cable broken, etc.). Fault presence corresponds to 0 VDC, normal working corresponds to 24 VDC.

Fault status is not affected by the Enable input signal. Fault output signal can be used as digital output by software selection.

20.10 Remote pressure/force transducer input signal - only for **TES-SP, SF, SL**

Analog remote pressure transducers or load cell can be directly connected to the driver (see 22.5).

Analog input signal is factory preset according to selected valve code, defaults are ±10 VDC for standard and 4 ÷ 20 mA for /C option.

Input signal can be reconfigured via software selecting between voltage and current, within a maximum range of ±10 VDC or ± 20 mA.

Refer to pressure/force transducer characteristics to select the transducer type according to specific application requirements (see tech table **FS500**).

20.11 Multiple PID selection (D_IN0 and D_IN1) - only **NP** execution for **TES-SP, SF, SL**

Two on-off input signals are available on the main connector to select one of the four pressure (force) PID parameters setting, stored into the driver.

Switching the active setting of pressure PID during the machine cycle allows to optimize the system dynamic response in different hydraulic working conditions (volume, flow, etc.).

Supply a 24 VDC or a 0 VDC on pin 9 and/or pin 10, to select one of the PID settings as indicated by binary code table at side. Gray code can be selected by software.

	PID SET SELECTION			
PIN	SET 1	SET 2	SET 3	SET 4
9	0	24 VDC	0	24 VDC
10	0	0	24 VDC	24 VDC

21 IO-LINK SIGNALS SPECIFICATIONS - only for **TEB-SN-IL**

21.1 Power supply for IO-Link communication (L+ and L-)

The IO-Link master provides dedicated 24 VDC power supply for IO-Link communication.
Maximum power consumption: 2 W
Internal electrical isolation of power L+, L- from P24, N24

21.2 Power supply for driver's logic and valve regulation (P24 and N24)

The IO-Link master provides dedicated 24 VDC power supply for valve regulation, logics and diagnostics.
Maximum power consumption: 50 W
Internal electrical isolation of power P24, N24 from L+, L-

21.3 IO-Link data line (C/Q)

C/Q signal is used to establish communication between IO-Link master and valve.

22 ELECTRONIC CONNECTIONS

For electronic connection of certified safety options **/U** see tech. table **FY100** and **/K** see tech. table **FY200**

22.1 Main connector signals - 7 pin (A1) **Standard**, **/Q** and **/F** options

PIN	Standard	/Q	/F	TECHNICAL SPECIFICATIONS	NOTES
A	**V+**			Power supply 24 VDC	Input - power supply
B	**V0**			Power supply 0 VDC	Gnd - power supply
C	**AGND**		**AGND**	Analog ground	Gnd - analog signal
		ENABLE		Enable (24 VDC) or disable (0 VDC) the valve, referred to V0	Input - on/off signal
D	**Q_INPUT+**			Flow reference input signal: ±10 VDC / ±20 mA maximum range Defaults are ±10 VDC for standard and 4 ÷ 20 mA for /I option	Input - analog signal **Software selectable**
E	**INPUT-**			Negative reference input signal for Q_INPUT+	Input - analog signal
F	**Q_MONITOR** referred to: AGND V0			Flow monitor output signal: ±10 VDC / ±20 mA maximum range Defaults are ±10 VDC for standard and 4 ÷ 20 mA for /I option	Output - analog signal **Software selectable**
			FAULT	Fault (0 VDC) or normal working (24 VDC)	Output - on/off signal
G	**EARTH**			Internally connected to the driver housing	

22.2 Main connector signals - 12 pin (A2) **/Z** option and **TES-SP, SF, SL**

PIN	TEB-SN /Z	TES-SN /Z	TES-SP, SF, SL Fieldbus	TES-SP, SF, SL NP	TECHNICAL SPECIFICATIONS	NOTES
1	**V+**				Power supply 24 VDC	Input - power supply
2	**V0**				Power supply 0 VDC	Gnd - power supply
3	**ENABLE** referred to: V0	VL0	VL0	V0	Enable (24 VDC) or disable (0 VDC) the valve	Input - on/off signal
4	**Q_INPUT+**				Flow reference input signal: ±10 VDC / ±20 mA maximum range Defaults are ±10 VDC for standard and 4 ÷ 20 mA for /I option	Input - analog signal **Software selectable**
5	**INPUT-**				Negative reference input signal for Q_INPUT+ and F_INPUT+	Input - analog signal
6	**Q_MONITOR** referred to: AGND	VL0	VL0	V0	Flow monitor output signal: ±10 VDC / ±20 mA maximum range Defaults are ±10 VDC for standard and 4 ÷ 20 mA for /I option	Output - analog signal **Software selectable**
7	**AGND**				Analog ground	Gnd - analog signal
		NC			Do not connect	
			F_INPUT+		Pressure/Force reference input signal: ±10 VDC / ±20 mA maximum range Defaults are ±10 VDC for standard and 4 ÷ 20 mA for /I option	Input - analog signal **Software selectable**
8	**R_ENABLE**				Repeat enable, output repeater signal of enable input, referred to V0	Output - on/off signal
		NC			Do not connect	
			F_MONITOR referred to: VL0	V0	Pressure/Force monitor output signal: ±10 VDC / ±20 mA maximum range Defaults are ±10 VDC for standard and 4 ÷ 20 mA for /I option	Output - analog signal **Software selectable**
9	**NC**				Do not connect	
		VL+			Power supply 24 VDC for driver's logic and communication	Input - power supply
				D_IN0	Multiple pressure/force PID selection, referred to V0	Input - on/off signal
10	**NC**				Do not connect	
		VL0			Power supply 0 VDC for driver's logic and communication	Gnd - power supply
				D_IN1	Multiple pressure/force PID selection (not available for SF), referred to V0	Input - on/off signal
11	**FAULT** referred to: V0	VL0	VL0	V0	Fault (0 VDC) or normal working (24 VDC)	Output - on/off signal
PE	**EARTH**				Internally connected to the driver housing	

Note: do not disconnect VL0 before VL+ when the driver is connected to PC USB port

22.3 IO-Link connector signals - M12 - 5 pin - Coding A, port class B (A) only for **TEB-SN-IL**

PIN	SIGNAL	TECHNICAL SPECIFICATIONS	NOTES
1	**L+**	Power supply 24 VDC for IO-Link communication	Input - power supply
2	**P24**	Power supply 24 VDC for valve regulation, logics and diagnostics	Input - power supply
3	**L-**	Power supply 0 VDC for IO-Link communication	Gnd - power supply
4	**C/Q**	IO-Link data line	Input / Output - signal
5	**N24**	Power supply 0 VDC for valve regulation, logics and diagnostics	Gnd - power supply

Note: L+, L- and P24, N24 are electrically isolated

22.4 Communications connectors (B) - (C)

(B) **USB connector - M12 - 5 pin** always present		
PIN	**SIGNAL**	**TECHNICAL SPECIFICATION** (1)
1	**+5V_USB**	Power supply
2	**ID**	Identification
3	**GND_USB**	Signal zero data line
4	**D-**	Data line -
5	**D+**	Data line +

(C1) (C2) **BC fieldbus execution, connector - M12 - 5 pin**		
PIN	**SIGNAL**	**TECHNICAL SPECIFICATION** (1)
1	**CAN_SHLD**	Shield
2	**not used**	(C1) - (C2) pass-through connection (2)
3	**CAN_GND**	Signal zero data line
4	**CAN_H**	Bus line (high)
5	**CAN_L**	Bus line (low)

(C1) (C2) **BP fieldbus execution, connector - M12 - 5 pin**		
PIN	**SIGNAL**	**TECHNICAL SPECIFICATION** (1)
1	**+5V**	Termination supply signal
2	**LINE-A**	Bus line (high)
3	**DGND**	Data line and termination signal zero
4	**LINE-B**	Bus line (low)
5	**SHIELD**	

(C1) (C2) **EH, EW, EI, EP fieldbus execution, connector - M12 - 4 pin**		
PIN	**SIGNAL**	**TECHNICAL SPECIFICATION** (1)
1	**TX+**	Transmitter
2	**RX+**	Receiver
3	**TX-**	Transmitter
4	**RX-**	Receiver
Housing	**SHIELD**	

(1) Shield connection on connector's housing is recommended

(2) Pin 2 can be fed with external +5V supply of CAN interface

22.5 Remote pressure/force transducer connector - M12 - 5 pin - only for **SP, SF, SL** (D)

PIN	SIGNAL	TECHNICAL SPECIFICATION	NOTES	(D1) **SP, SL - Single transducer** (1)		(D2) **SF - Double transducers** (1)	
				Voltage	**Current**	**Voltage**	**Current**
1	**VF +24V**	Power supply +24VDC	Output - power supply	Connect	Connect	Connect	Connect
2	**TR1**	1st signal transducer: ±10 VDC / ±20 mA maximum range	Input - analog signal **Software selectable**	Connect	Connect	Connect	Connect
3	**AGND**	Common gnd for transducer power and signals	Common gnd	Connect	/	Connect	/
4	**TR2**	2nd signal transducer: ±10 VDC / ±20 mA maximum range	Input - analog signal **Software selectable**	/	/	Connect	Connect
5	**NC**	Not connect		/	/	/	/

(1) Single/double transducer configuration is software selectable

Remote pressure transducers connection - example

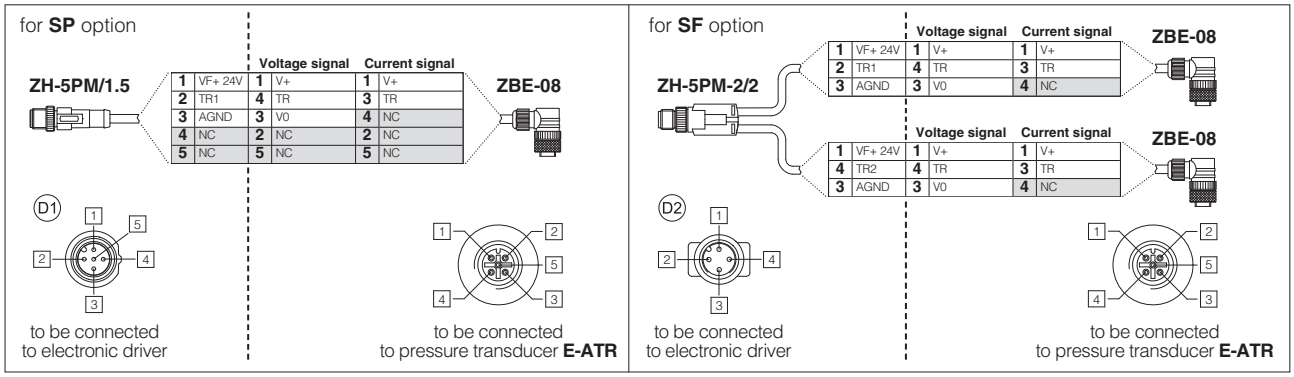

Note: pin layout always referred to driver's view

22.6 TEB-SN-NP connections layout

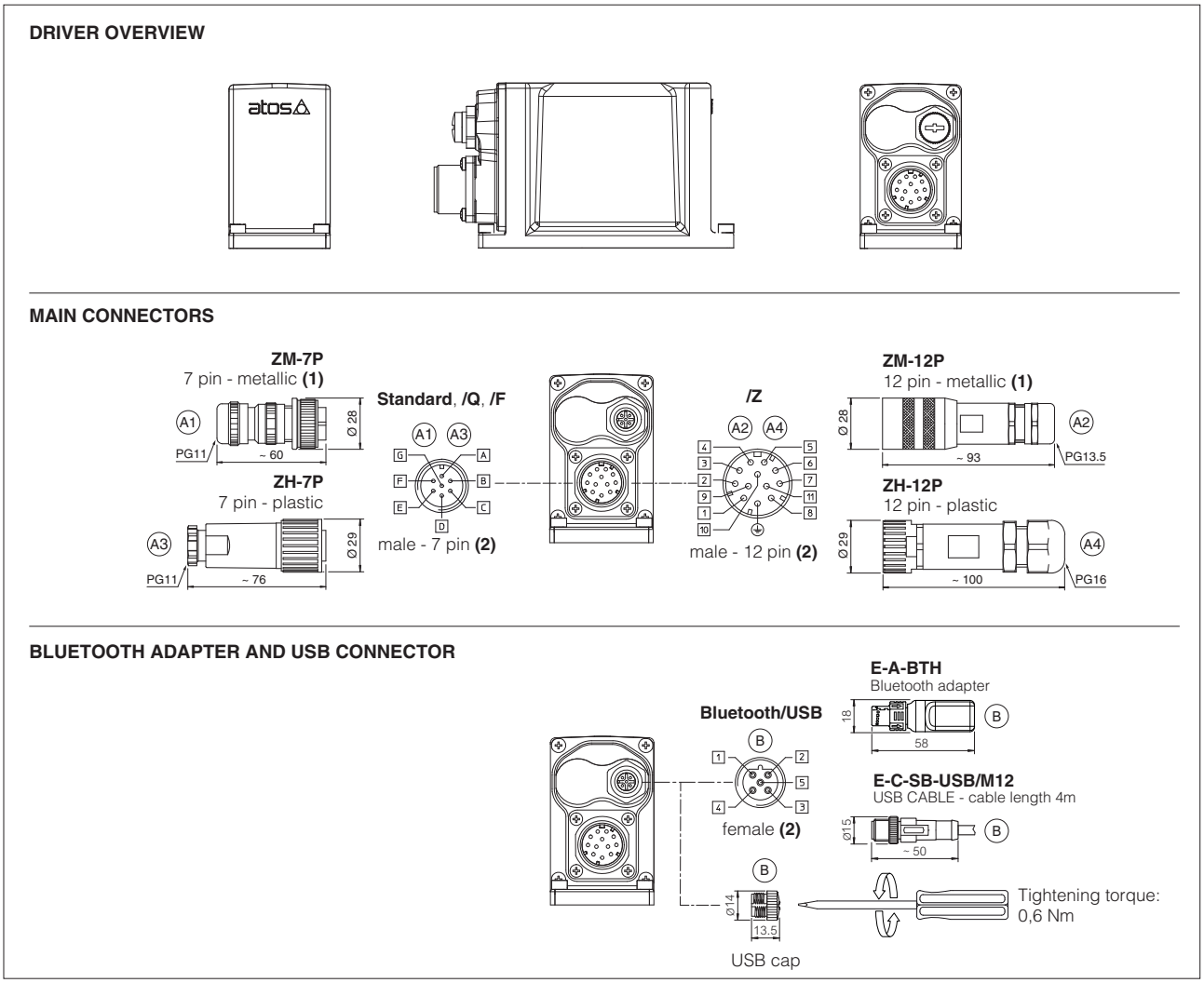

(1) Use of metallic connectors is strongly recommended in order to fulfill EMC requirements **(2)** Pin layout always referred to driver's view

22.7 TEB-SN-IL connections layout

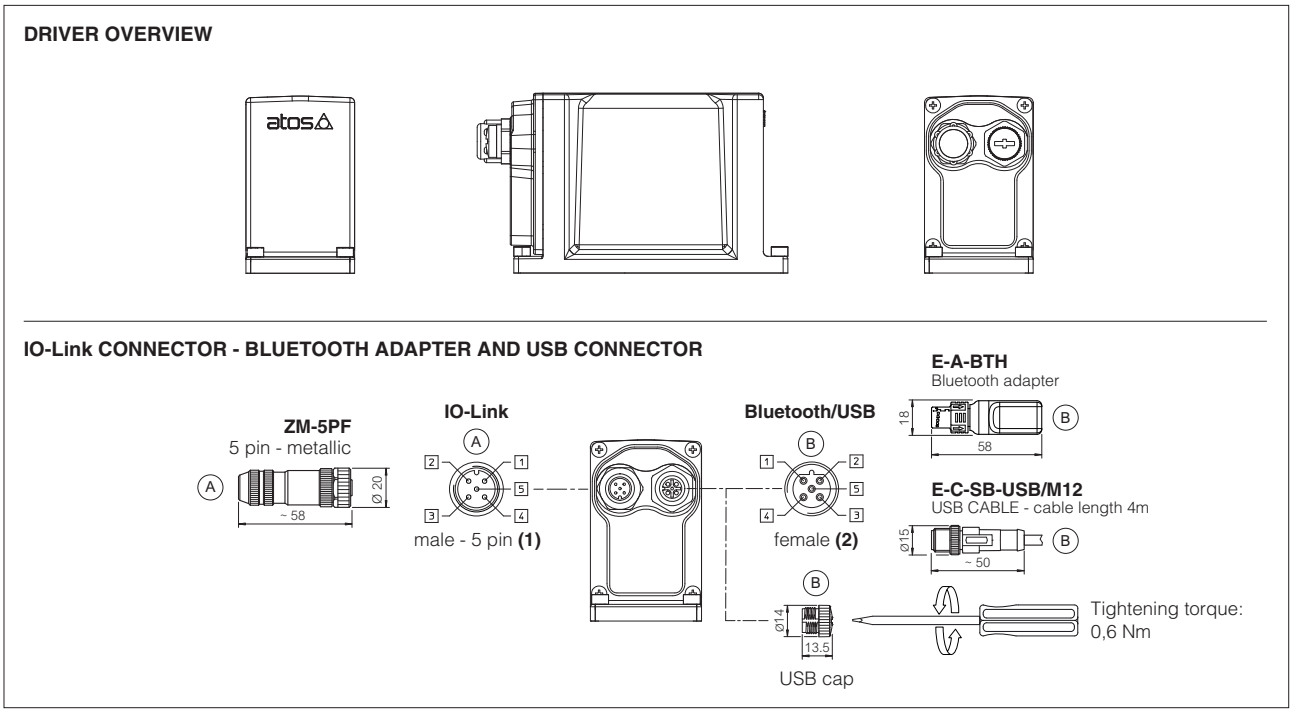

(1) Pin layout always referred to driver's view

22.8 TES connections layout

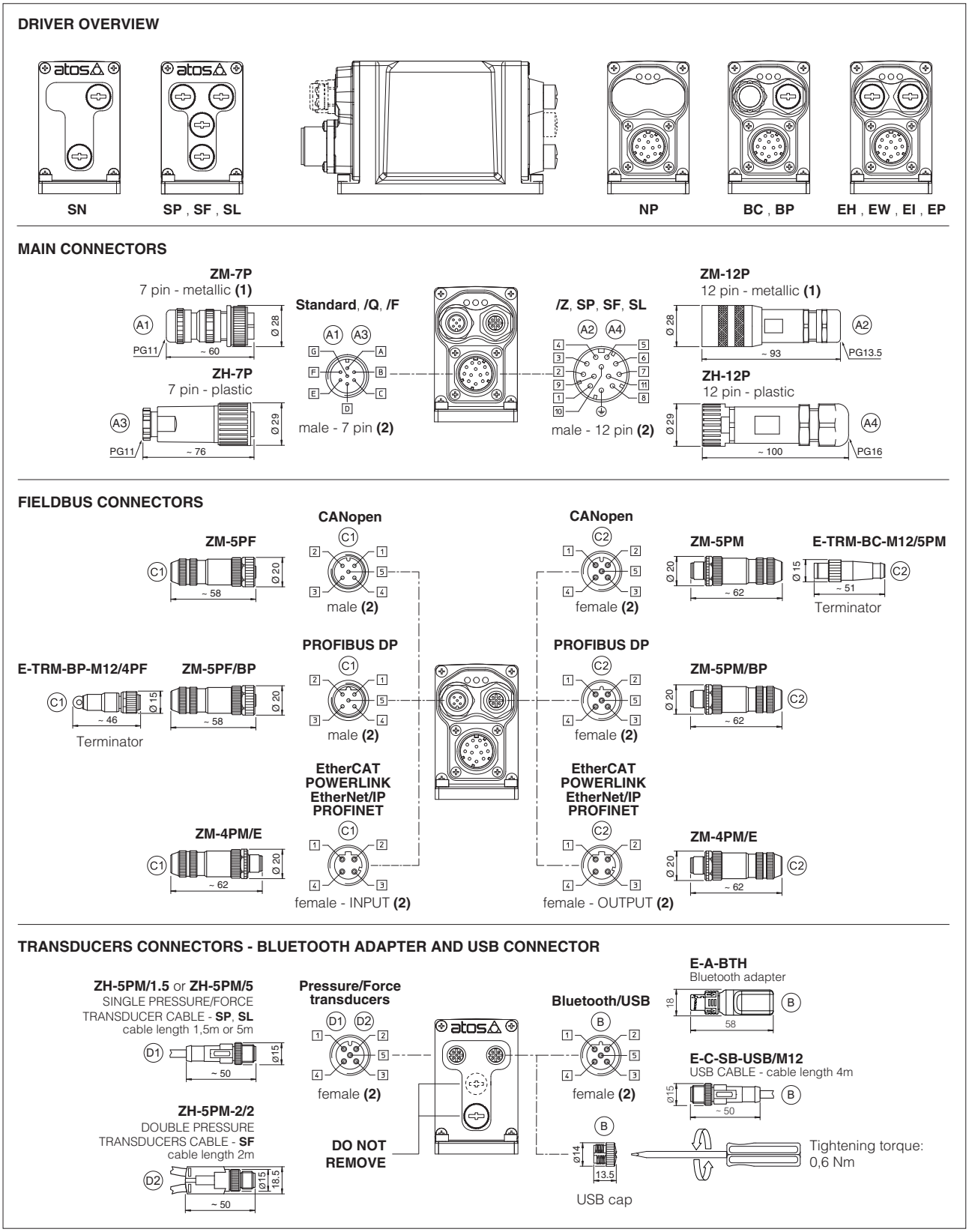

(1) Use of metallic connectors is strongly recommended in order to fulfill EMC requirements **(2)** Pin layout always referred to driver's view

22.9 Diagnostic LEDs - only for TES

Three leds show driver operative conditions for immediate basic diagnostics. Please refer to the driver user manual for detailed information.

FIELDBUS / LEDS	NP Not Present	BC CANopen	BP PROFIBUS DP	EH EtherCAT	EW POWERLINK	EI EtherNet/IP	EP PROFINET
L1	VALVE STATUS			LINK/ACT			
L2	NETWORK STATUS			NETWORK STATUS			
L3	SOLENOID STATUS			LINK/ACT			

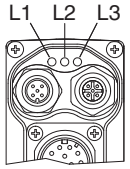

23 IN / OUT FIELDBUS COMMUNICATION CONNECTORS

Two fieldbus communication connectors are always available for digital drivers executions BC, BP, EH, EW, EI, EP. This features allows considerable technical advantages in terms of installation simplicity, wirings reduction and also avoid the usage expensive T-connectors.
For BC and BP executions the fieldbus connectors have an internal pass-through connection and can be used like end point of the fieldbus network, using an external terminator (see tech table **GS500**).
For EH, EW, EI and EP executions the external terminators are not required: each connector is internally terminated.

BC and BP pass-through connection

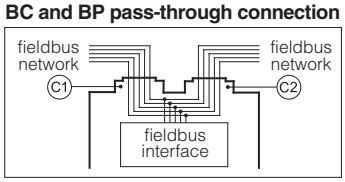

24 CONNECTORS CHARACTERISTICS - to be ordered separately

24.1 Main connectors - 7 pin

CONNECTOR TYPE	POWER SUPPLY AND SIGNALS	POWER SUPPLY AND SIGNALS
CODE	A1 ZM-7P	A3 ZH-7P
Type	7pin female straight circular	7pin female straight circular
Standard	According to MIL-C-5015	According to MIL-C-5015
Material	Metallic	Plastic reinforced with fiber glass
Cable gland	PG11	PG11
Recommended cable	LiYCY 7 x 0,75 mm² max 20 m (logic and power supply) or LiYCY 7 x 1 mm² max 40 m (logic and power supply)	LiYCY 7 x 0,75 mm² max 20 m (logic and power supply) or LiYCY 7 x 1 mm² max 40 m (logic and power supply)
Conductor size	up to 1 mm² - available for 7 wires	up to 1 mm² - available for 7 wires
Connection type	to solder	to solder
Protection (EN 60529)	IP 67	IP 67

24.2 Main connectors - 12 pin

CONNECTOR TYPE	POWER SUPPLY AND SIGNALS	POWER SUPPLY AND SIGNALS
CODE	A2 ZM-12P	A4 ZH-12P
Type	12pin female straight circular	12pin female straight circular
Standard	DIN 43651	DIN 43651
Material	Metallic	Plastic reinforced with fiber glass
Cable gland	PG13,5	PG16
Recommended cable	LiYCY 12 x 0,75 mm² max 20 m (logic and power supply)	LiYCY 10 x 0,14mm² max 40 m (logic) LiYY 3 x 1mm² max 40 m (power supply)
Conductor size	0,5 mm² to 1,5 mm² - available for 12 wires	0,14 mm² to 0,5 mm² - available for 9 wires 0,5 mm² to 1,5 mm² - available for 3 wires
Connection type	to crimp	to crimp
Protection (EN 60529)	IP 67	IP 67

24.3 IO-Link connector - only for **TEB-SN-IL**

CONNECTOR TYPE	IL IO-Link
CODE	A ZM-5PF
Type	5pin female straight circular
Standard	M12 coding A – IEC 61076-2-101
Material	Metallic
Cable gland	Pressure nut - cable diameter 6÷8 mm
Recommended cable	5 x 0,75 mm² max 20 m
Connection type	screw terminal
Protection (EN 60529)	IP 67

24.4 Fieldbus communication connectors

CONNECTOR TYPE	BC CANopen (1)		BP PROFIBUS DP (1)		EH EtherCAT, EW POWERLINK, EI EtherNet/IP, EP PROFINET (2)
CODE	C1 ZM-5PF	C2 ZM-5PM	C1 ZM-5PF/BP	C2 ZM-5PM/BP	C1 C2 ZM-4PM/E
Type	5 pin female straight circular	5 pin male straight circular	5 pin female straight circular	5 pin male straight circular	4 pin male straight circular
Standard	M12 coding A – IEC 61076-2-101		M12 coding B – IEC 61076-2-101		M12 coding D – IEC 61076-2-101
Material	Metallic		Metallic		Metallic
Cable gland	Pressure nut - cable diameter 6÷8 mm		Pressure nut - cable diameter 6÷8 mm		Pressure nut - cable diameter 4÷8 mm
Cable	CANbus Standard (DR 303-1)		PROFIBUS DP Standard		Ethernet standard CAT-5
Connection type	screw terminal		screw terminal		terminal block
Protection (EN 60529)	IP67		IP 67		IP 67

(1) E-TRM-** terminators can be ordered separately - see tech table **GS500**

(2) Internally terminated

24.5 Remote pressure/Force transducer connectors - only for **SP, SF, SL**

CONNECTOR TYPE	SP, SL - Single transducer		SF - Double transducers
CODE	D1 ZH-5PM/1.5	D1 ZH-5PM/5	D2 ZH-5PM-2/2
Type	5 pin male straight circular		4 pin male straight circular
Standard	M12 coding A – IEC 61076-2-101		M12 coding A – IEC 61076-2-101
Material	Plastic		Plastic
Cable gland	Connector moulded on cables 1,5 m length	5 m length	Connector moulded on cables 2 m length
Cable	5 x 0,25 mm²		3 x 0,25 mm² (both cables)
Connection type	molded cable		splitting cable
Protection (EN 60529)	IP 67		IP 67

DHZO-TEB, DHZO-TES

ISO 4401: 2005
Mounting surface: 4401-03-02-0-05 (see table P005)
(for /Y surface 4401-03-03-0-05 without X port)

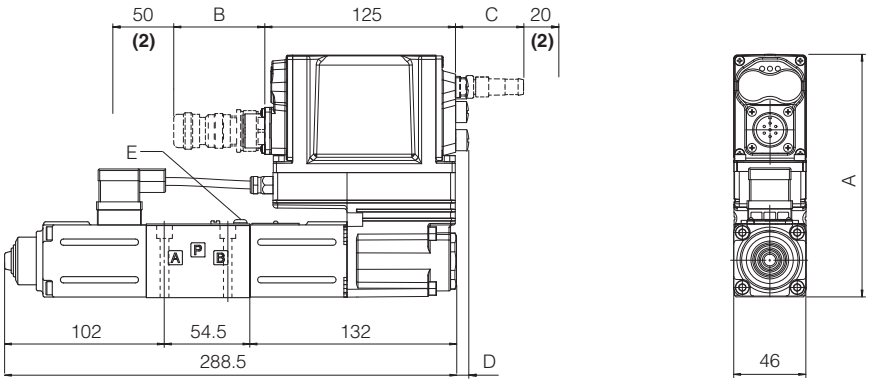

DHZO-*-07	A	B (1)	C (1)	D	E (air bleeding)	Mass [kg]
TEB - SN - IL	155	60	-	-	3	3,5
TEB - SN - NP	155	100	-	-		
TES - SN - NP, BC, BP, EH	155	100	58	8		
TES - SN - EW, EI, EP	155	100	58	8		
TES - SP, SF, SL - *	155	100	58	8		

(1) The indicated dimension refers to the longer connectors or Bluetooth adapter
For dimensions of connectors and Bluetooth adapter, see sections 22.6, 22.7 and 22.8
(2) Space required for connection cable and for connector removal

DKZOR-TEB, DKZOR-TES

ISO 4401: 2005
Mounting surface: 4401-05-04-0-05 (see table P005)
(for /Y surface 4401-05-05-0-05 without X port)

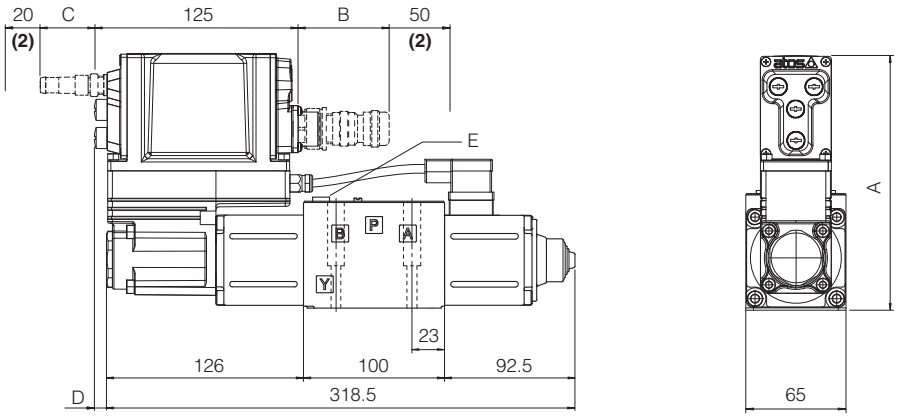

DKZOR-*-17	A	B (1)	C (1)	D	E (air bleeding)	Mass [kg]
TEB - SN - IL	165	60	-	-	4 or 13	5,4
TEB - SN - NP	165	100	-	-		
TES - SN - NP, BC, BP, EH	165	100	58	8		
TES - SN - EW, EI, EP	165	100	58	8		
TES - SP, SF, SL - *	165	100	58	8		

(1) The indicated dimension refers to the longer connectors or Bluetooth adapter
For dimensions of connectors and Bluetooth adapter, see sections 22.6, 22.7 and 22.8
(2) Space required for connection cable and for connector removal

Note: for /B option the solenoid, the LVDT transducer and the on-board digital driver are at side of port A

26 FASTENING BOLTS AND SEALS

	DHZO	DKZOR
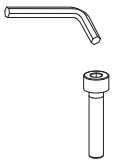	**Fastening bolts:** 4 socket head screws M5x50 class 12.9 Tightening torque = 8 Nm	**Fastening bolts:** 4 socket head screws M6x40 class 12.9 Tightening torque = 15 Nm
	Seals: 4 OR 108 Diameter of ports A, B, P, T: Ø 7,5 mm (max) 1 OR 2025 Diameter of port Y: Ø = 3,2 mm (only for /Y option)	**Seals:** 5 OR 2050 Diameter of ports A, B, P, T: Ø 11,2 mm (max) 1 OR 108 Diameter of port Y: Ø = 5 mm (only for /Y option)

27 RELATED DOCUMENTATION

FS001	Basics for digital electrohydraulics	**K800**	Electric and electronic connectors
FS500	Digital proportional valves with p/Q control	**P005**	Mounting surfaces for electrohydraulic valves
FS620	Digital proportional valves with integral axis controller	**QB300**	Quickstart for TEB valves commissioning
FS900	Operating and maintenance information for proportional valves	**QF300**	Quickstart for TES valves commissioning
FY100	Safety proportional valves - option /U	**Y010**	Basics for safety components
FY200	Safety proportional valves - option /K	**E-MAN-RI-LEB**	TEB/LEB user manual
GS500	Programming tools	**E-MAN-RI-LES**	TES/LES user manual
GS510	Fieldbus	**E-MAN-RI-LES-S**	TES/LES with p/Q control user manual
GS520	IO-Link interface		

Servoproportional directional valves

direct, with LVDT transducer and zero spool overlap

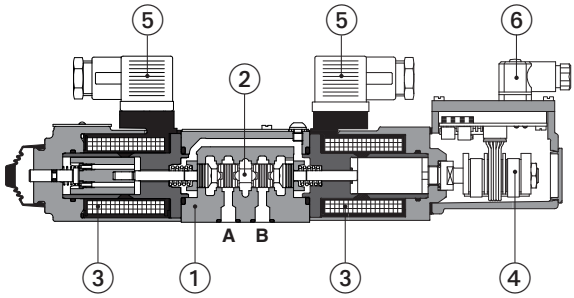

DHZO-T-070

① Valve body
② Spool
③ Proportional solenoid
④ LVDT transducer
⑤ Solenoid connector
⑥ Transducer connector

DHZO-T, DKZOR-T

Servoproportional directional valves, direct, with LVDT position transducer and zero spool overlap for best performances in any position closed loop.

The valves operate in association with digital off-board divers or axis card, see section 2.

The LVDT transducer grants very high regulation accuracy and response sensitivity.

With de-energized proportional solenoids, mechanical central position of the spool is performed by centering springs.

Spools regulation characteristics:
L = linear
D = differential-progressive, for control of actuators with area ratio 1:2

DHZO:	**DKZOR**:
Size: **06** - ISO 4401	Size: **10** - ISO 4401
Max flow: **80 l/min**	Max flow: **180 l/min**
Max pressure: **350 bar**	Max pressure: **315 bar**

1 MODEL CODE

DHZO - **T** - **0** **70** - **L** **5** / * * / *

DHZO = size 06
DKZOR = size 10

T = with LVDT transducer

Valve size ISO 4401:
0 = 06 **1** = 10

Configuration:

Standard

70 =

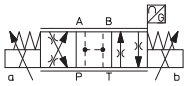

Option **/B**

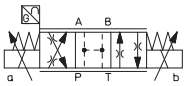

Spool type, regulating characteristics:

L = linear

D = differential-progressive

P-A = Q, B-T = Q/2
P-B = Q/2, A-T = Q

Spool size:

		3 (L)	**5** (L,D)
DHZO	=	18	28
DKZOR	=	45	75

Nominal flow (l/min) at Δp 10bar P-T

Hydraulic options (1):
B = solenoid and LVDT transducer at side of port A
Y = external drain

Series number

Seals material,
see section 6 :
- = NBR
PE = FKM
BT = HNBR

(1) Possible combined options: /BY

2 OFF-BOARD ELECTRONIC DRIVERS

Please include in the driver order also the complete code of the connected proportional valve.

Drivers model	E-BM-TEB	E-BM-TES	Z-BM-TEZ
Type	Digital	Digital	Digital
Format	DIN-rail panel	DIN-rail panel	DIN-rail panel
Tech table	GS230	GS240	GS330

3 GENERAL CHARACTERISTICS

Assembly position	Any position
Subplate surface finishing to ISO 4401	Acceptable roughness index: Ra ≤ 0,8, recommended Ra 0,4 – Flatness ratio 0,01/100
MTTFd valves according to EN ISO 13849	150 years, see technical table P007
Ambient temperature range	**Standard** = -20°C ÷ +60°C **/PE** option = -20°C ÷ +60°C **/BT** option = -40°C ÷ +60°C
Storage temperature range	**Standard** = -20°C ÷ +70°C **/PE** option = -20°C ÷ +70°C **/BT** option = -40°C ÷ +70°C
Surface protection	Zinc coating with black passivation
Corrosion resistance	Salt spray test (EN ISO 9227) > 200 h
Compliance	CE according to EMC directive 2014/30/EU (Immunity: EN 61000-6-2; Emission: EN 61000-6-3) RoHS Directive 2011/65/EU as last update by 2015/863/EU REACH Regulation (EC) n°1907/2006

4 HYDRAULIC CHARACTERISTICS - based on mineral oil ISO VG 46 at 50 °C

Valve model	**DHZO**			**DKZOR**		
Pressure limits [bar]	ports **P**, **A**, **B** = 350; **T** = 210 (250 with external drain /Y) **Y** = 10			ports **P**, **A**, **B** = 315; **T** = 210 (250 with external drain /Y) **Y** = 10		
Spool type	**L3**	**L5**	**D5**	**L3**	**L5**	**D5**
Nominal flow Δp P-T [l/min] **(1)** Δp= 10 bar	18	28	28	45	75	75
Δp= 30 bar	30	50	50	80	130	130
Δp= 70 bar	45	75	75	120	170	170
Max permissible flow **(2)**	50	80	80	130	180	180
Leakage [cm³/min]	<500 (at p = 100 bar); <1500 (at p = 350 bar)			<800 (at p = 100 bar); <2500 (at p = 315 bar)		
Response time **(3)** [ms]	≤ 15			≤ 20		
Hysteresis	≤ 0,2 [% of max regulation]					
Repeatibility	± 0,1 [% of max regulation]					
Thermal drift	zero point displacement < 1% at ΔT = 40°C					

(1) For different Δp, the max flow is in accordance to the diagrams in section 7.2
(2) See detailed diagrams in section 7.3
(3) 0-100% step signal

5 ELECTRICAL CHARACTERISTICS

Max power consumption	30 W
Max. solenoid current	**DHZO** = 2,6 A **DKZOR** = 3 A
Coil resistance R at 20°C	**DHZO** = 3 ÷ 3,3 Ω **DKZOR** = 3,8 ÷ 4,1 Ω
Insulation class	H (180°) Due to the occuring surface temperatures of the solenoid coils, the European standards ISO 13732-1 and EN982 must be taken into account
Protection degree to DIN EN60529	IP65 with mating connectors
Duty factor	Continuous rating (ED=100%)

6 SEALS AND HYDRAULIC FLUIDS - for other fluids not included in below table, consult our technical office

Seals, recommended fluid temperature	NBR seals (standard) = -20°C ÷ +80°C, with HFC hydraulic fluids = -20°C ÷ +50°C FKM seals (/PE option) = -20°C ÷ +80°C HNBR seals (/BT option) = -40°C ÷ +60°C, with HFC hydraulic fluids = -40°C ÷ +50°C		
Recommended viscosity	20÷100 mm²/s - max allowed range 15 ÷ 380 mm²/s		
Max fluid contamination level — normal operation	ISO4406 class 18/16/13 NAS1638 class 7		see also filter section at www.atos.com or KTF catalog
Max fluid contamination level — longer life	ISO4406 class 16/14/11 NAS1638 class 5		
Hydraulic fluid	**Suitable seals type**	**Classification**	**Ref. Standard**
Mineral oils	NBR, FKM, HNBR	HL, HLP, HLPD, HVLP, HVLPD	DIN 51524
Flame resistant without water	FKM	HFDU, HFDR	ISO 12922
Flame resistant with water	NBR, HNBR	HFC	

7 DIAGRAMS - based on mineral oil ISO VG 46 at 50 °C

7.1 Regulation diagrams (values measure at Δp 30 bar P-T)

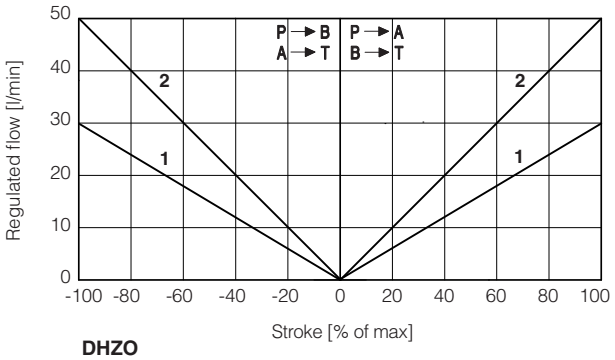

DHZO
1 = L3 **2** = L5

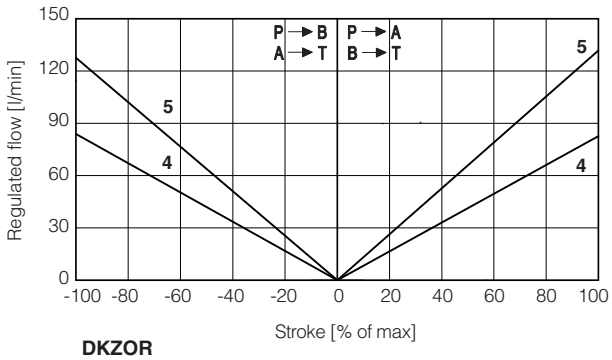

DKZOR
4 = L3 **5** = L5

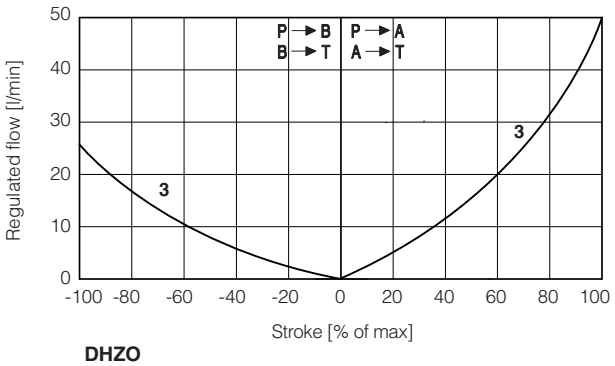

DHZO
3 = D5

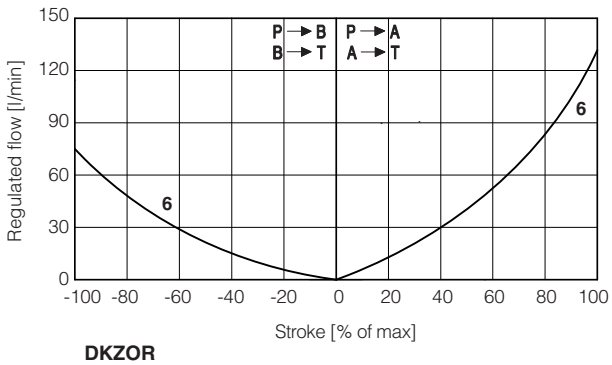

DKZOR
6 = D5

Note:

Hydraulic configuration vs. reference signal for configurations 70 (standard and option /B)

Reference signal $\left.\begin{matrix}0 \div +10\ V \\ 12 \div 20\ mA\end{matrix}\right\}$ P → A / B → T Reference signal $\left.\begin{matrix}0 \div -10\ V \\ 12 \div 4\ mA\end{matrix}\right\}$ P → B / A → T

7.2 Flow /Δp diagrams

stated at 100% of valve stroke

DHZO
1 = spool L3,
2 = spool L5, D5

DKZOR
3 = spool L3
4 = spool L5, D5

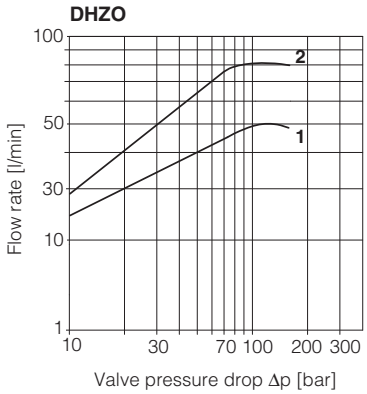

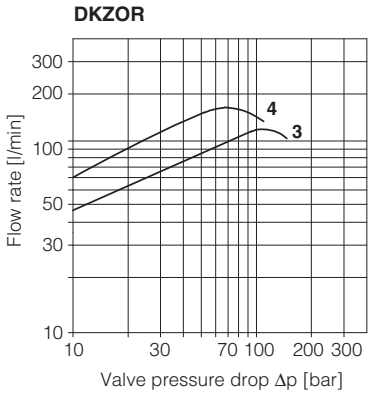

7.3 Operating limits

DHZO
1 = spool L3
2 = spool L5, D5

DKZOR
3 = spool L3
4 = spool L5, D5

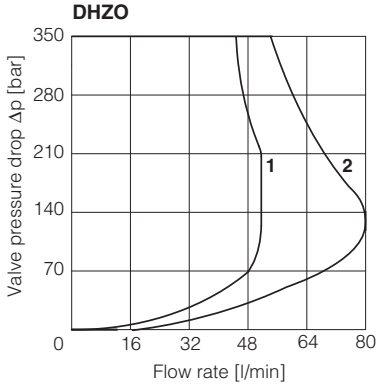

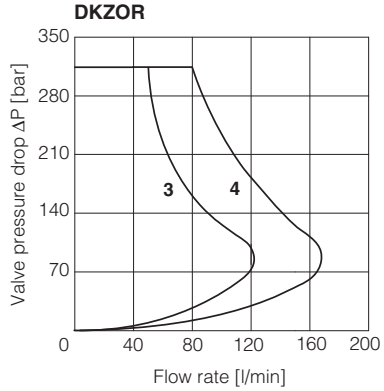

7.4 Response time

The response times in below diagrams are measured at different steps of the reference input signal. They have to be considered as average values. For the valves with digital electronics the dynamics performances can be optimized by setting the internal software parameters.

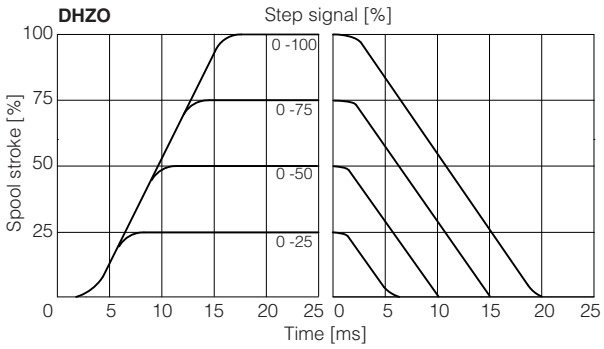

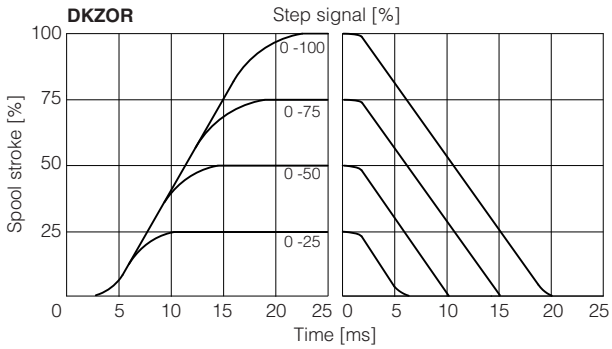

7.5 Bode diagrams

1 = 10% ⟷ 90% nominal stroke
2 = 50% ± 5% nominal stroke

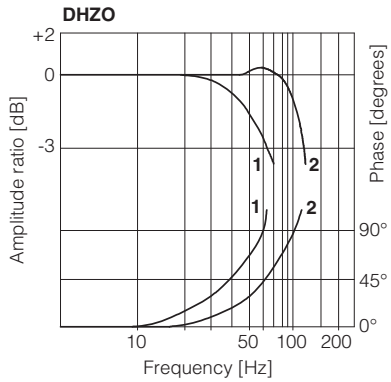

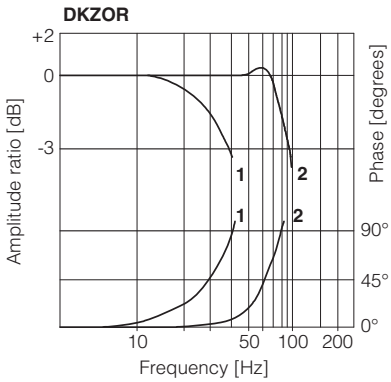

8 HYDRAULIC OPTIONS

B = Solenoid and position transducer at side of port A of the main stage. For hydraulic configuration vs reference signal, see 7.1

Y = This option is mandatory if the pressure in port T exceeds 210 bar.

9 ELECTRICAL CONNECTION

9.1 Solenoid connector - supplied with the valve

PIN	SIGNAL	TECHNICAL SPECIFICATION	Connector code 666
1	**COIL**	Power supply	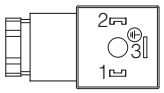
2	**COIL**	Power supply	
3	**GND**	Ground	

9.2 LVDT transducer connector - supplied with the valve

PIN	SIGNAL	TECHNICAL SPECIFICATION	Connector code 345
1	**TR**	Output signal	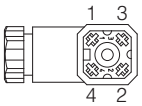
2	**VT-**	Power supply -15VDC	
3	**VT+**	Power supply +15VDC	
4	**GND**	Ground	

10 SAFETY REST POSITION - configuration 70

In absence of power supply to the solenoids, the valve spool is moved by the springs force to the **safety rest position** characterized by a small off-set of about 1% to 6% of the total stroke in P-B / A-T configuration.
This is specifically designed to avoid that in case of accidental interruption of power supply to the valve solenoids, the actuator moves towards an undefined direction (due to the tolerances of the zero overlap spool), with potential risk of damages or personnel injury.
Thanks to the **safety rest position** the actuator movement is suddenly stopped and it is recovered at very low speed towards the direction corresponding to the P-B/ A-T connection.

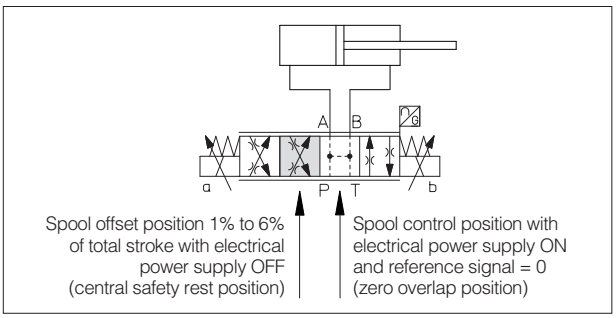

11 FASTENING BOLTS AND SEALS

	DHZO	DKZOR
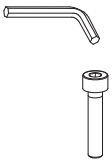	**Fastening bolts:** 4 socket head screws M5x50 class 12.9 Tightening torque = 8 Nm	**Fastening bolts:** 4 socket head screws M6x40 class 12.9 Tightening torque = 15 Nm
	Seals: 4 OR 108; Diameter of ports A, B, P, T: Ø 7,5 mm (max) 1 OR 2025 Diameter of port Y: Ø = 3,2 mm (only for /Y option)	**Seals:** 5 OR 2050; Diameter of ports A, B, P, T: Ø 11,2 mm (max) 1 OR 108 Diameter of port Y: Ø = 5 mm (only for /Y option)

12 INSTALLATION DIMENSIONS [mm]

DHZO-T

ISO 4401: 2005
Mounting surface: 4401-03-02-0-05 (see table P005)
(for /Y surface 4401-03-03-0-05 without X port)

Mass [kg]	
DHZO-T-07	2,6

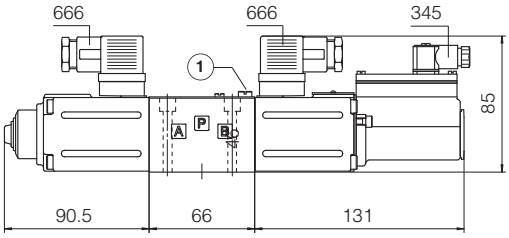

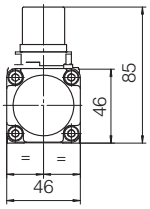

1 = Air bleeding 3

DKZOR-T

ISO 4401: 2005
Mounting surface: 4401-05-04-0-05 (see table P005)
(for /Y surface 4401-05-05-0-05 without X port)

Mass [kg]	
DKZOR-T-17	4,5

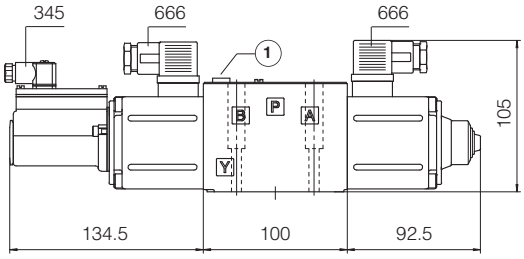

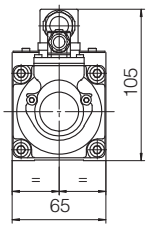

1 = Air bleeding 4 13

Note: for option /B the solenoid and the LVDT transducer are at side of port A

13 RELATED DOCUMENTATION

FS001	Basics for digital electrohydraulics	**GS500**	Programming tools
FS900	Operating and maintenance information for proportional valves	**GS510**	Fieldbus
GS230	E-BM-TEB digital driver	**K800**	Electric and electronic connectors
GS240	E-BM-TES digital driver	**P005**	Mounting surfaces for electrohydraulic valves
GS330	Z-BM-TEZ digital axis card		

Digital servoproportional directional valves

piloted, with on-board driver, two LVDT transducers and zero spool overlap

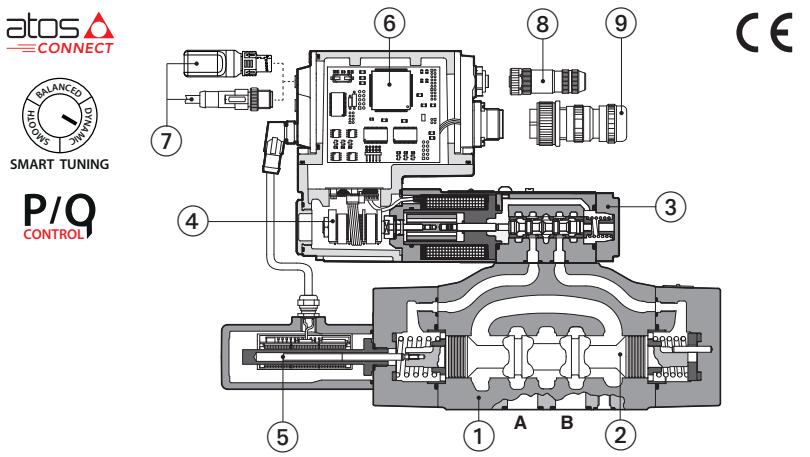

DPZO-LES-SN-BP-270

① Valve body
② Main stage Spool
③ Pilot valve
④ Pilot valve LVDT transducer
⑤ Main stage LVDT transducer
⑥ On-board digital driver
⑦ Bluetooth/USB connection
⑧ Fieldbus connectors
⑨ Main connector

DPZO-LEB, DPZO-LES

Digital servoproportional directional valves, piloted, with two LVDT position transducer and zero spool overlap for position closed loop controls.

LEB basic execution with analog reference signal or IO-Link interface for digital reference signals, valve settings, and real-time diagnostics.

LES full execution which includes also optional alternated p/Q controls and fieldbus interfaces for digital reference signals, valve settings, and real-time diagnostics.

Bluetooth/USB connection is always present for valve settings via mobile App and Atos PC software.

Digital LEZ version (see tech. table FS630) integrates on-board driver and axis card, while LEB-SN-NP and LES versions can be used in combination with Z-BM-KZ off-board axis card (see tech. table GS340).

Size: **10** ÷ **35** - ISO 4401
Max flow: **180** ÷ **3500 l/min**
Max pressure: **350 bar**

1 MODEL CODE

DPZO - LES - SN - NP - 2 70 - L 5 / * / * / * * / *

Servoproportional directional valve, piloted

LEB = basic on-board digital driver
LES = full on-board digital driver

Alternated p/Q controls, see section 8 :
SN = none
Only for LES:
SP = pressure control (1 pressure transducer)
SF = force control (2 pressure transducers)
SL = force control (1 load cell)

IO-Link interface, only for LEB, see section 6 :
NP = Not present **IL** = IO-Link

Fieldbus interfaces, only for LES, see section 7 :
NP = Not present
BC = CANopen **EW** = POWERLINK
BP = PROFIBUS DP **EI** = EtherNet/IP
EH = EtherCAT **EP** = PROFINET RT/IRT

Valve size ISO 4401:
1 = 10 **2** = 16 **4** = 25 **4M** = 27 **6** = 32 **8** = 35

Configuration:

Standard Option **/B**

60 =

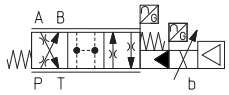

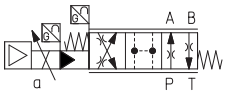

70 =

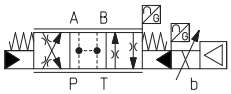

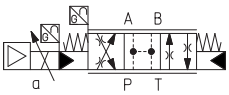

Spool type, regulating characteristics, see section 15 :

L = linear **T** = non linear **(1)** **DL** = differential-linear
P-A = Q, B-T = Q/2
P-B = Q/2, A-T = Q

Spool size:

	3 (L)	**5** (L,DL)	**5** (L)	**5** (T)
DPZO-1 =	-	100	-	-
DPZO-2 =	160	250	-	190
DPZO-4 =	-	480	-	-
DPZO-4M =	-	550	-	-
DPZO-6 =	-	-	640	-
DPZO-8 =	-	-	1200	-

Nominal flow (l/min) at Δp 10bar P-T (see section 12)

Series number

Seals material, see section 14 :
- = NBR
PE = FKM
BT = NBR low temperature

Safety options TÜV certified - only for LES **(2)**:
U = safe double power supply
K = safe on/off signals
See section 10

SAFETY CERTIFIED

Bluetooth option (2), see section 4 :
T = Bluetooth adapter supplied with the valve

Hydraulic options (2):
B = solenoid with on-board digital driver and LVDT transducer at side of port B of the main stage (side A of pilot valve)
D = internal drain
E = external pilot pressure
G = pressure reducing valve for piloting (standard for DPZO-1)

Electronic options (2), not available for LEB-SN-IL:
C = current feedback for pressure transducer 4÷20mA (only LES-SP, SF, SL)
F = fault signal
I = current reference input and monitor 4÷20mA
Q = enable signal
Z = double power supply (only for LES), enable, fault and monitor signals - 12 pin connector

(1) Only for DPZO-*-270 **(2)** For possible combined options, see section 18

2 GENERAL NOTES

Atos digital proportionals valves are CE marked according to the applicable directives (e.g. Immunity and Emission EMC Directive).
Installation, wirings and start-up procedures must be performed according to the general prescriptions shown in tech table **FS900** and in the user manuals included in the E-SW-SETUP programming software.

3 VALVE SETTINGS AND PROGRAMMING TOOLS - see tech. table GS500

3.1 Atos CONNECT mobile App

Free downloadable App for smartphones and tablets which allows quick access to valve main functional parameters and basic diagnostic information via Bluetooth, thus avoiding physical cable connection and significantly reducing commissioning time.
Atos CONNECT supports Atos digital valve drivers equipped with E-A-BTH adapter or with built-in Bluetooth. It does not support valves with p/Q control or axis controls.

Download on the App Store

GET IT ON Google Play

3.2 E-SW-SETUP PC software

Free downloadable software for PC allows to set all valve functional parameters and to access complete diagnostic information of digital valve drivers via Bluetooth/USB service port.
Atos E-SW-SETUP PC software supports all Atos digital valve drivers and it is available at www.atos.com in MyAtos area.

WARNING: drivers USB port is not isolated! For E-C-SB-USB/M12 cable, the use of E-A-SB-USB/OPT isolator adapter is highly recommended for PC protection

Bluetooth or USB connection

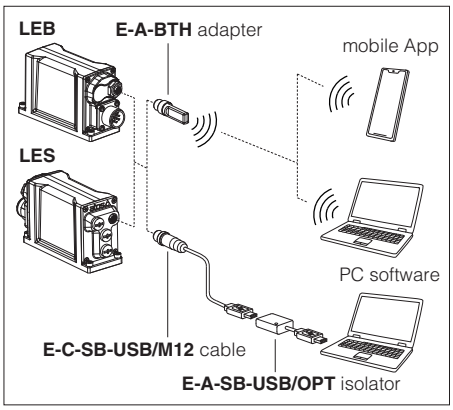

4 BLUETOOTH OPTION - see tech. table GS500

T option adds Bluetooth® connectivity to Atos valve drivers thanks to E-A-BTH adapter, which can be left permanently installed on-board, to allow the Bluetooth connection with the valve drivers at any time. E-A-BTH adapter can also be purchased separately and used to connect with any supported Atos digital product.
Bluetooth connection to the valve can be protected against unauthorised access by setting a personal password. The adapter leds visually indicates the status of valve driver and Bluetooth connection.

WARNING: for the list of countries where the Bluetooth adapter has been approved, see tech. table **GS500**
T option is not available for the Indian market, so the Bluetooth adapter must be ordered separately.

5 SMART TUNING

Smart tuning allows to adjust the valve dynamic response in order to match different performance requirements.

The valve is provided with 3 factory settings for the spool control:
- **dynamic** fast response time and high sensitivity for best dynamic performances. Default factory setting for directional valves
- **balanced** average response time and sensitivity suitable for major applications
- **smooth** attenuated response time and sensitivity to improve control stability in critical applications or in environments with electrical disturbances

Smart tuning setting can be switched from Dynamic (default) to Balanced or Smooth via software or fieldbus; if requested, performances can be further customized directly tuning each single control parameter. For details consult related manuals E-MAN-RI-* and Quickstart, see section 28.

For Response time and Bode diagrams see section 15.

6 IO-LINK - only for LEB, see tech. table GS520

IO-Link allows low cost digital communication between the valve and machine central unit. The valve is directly connected to a port of an IO-Link master (point-to-point connection) via low-cost unshielded cables for digital reference, diagnostic and settings. The IO-Link master works as a hub exchanging this information with the machine central unit via fieldbus.

7 FIELDBUS - only for LES, see tech. table GS510

Fieldbus allows valve direct communication with machine control unit for digital reference, valve diagnostics and settings. These execution allow to operate the valves through fieldbus or analog signals available on the main connector.

8 ALTERNATED p/Q CONTROLS - only for LES, see tech. table FS500

S* options add the closed loop control of pressure (**SP**) or force (**SF** and **SL**) to the basic functions of proportional directional valves flow regulation. A dedicated algorithm alternates pressure (force) depending on the actual hydraulic system conditions.
An additional connector is available for transducers to be interfaced to the valve's driver (1 pressure transducer for SP, 2 pressure transducers for SF or 1 load cell for SL). The alternated pressure control (SP) is possible only for specific installation conditions.
Main 12 pin connector is the same as /Z option plus two analog signals specific for the pressure (force) control.

9 AXIS CONTROLLER - see tech. table FS630

Digital servoproportional with on-board electronics **LEZ** include valve's driver plus axis controller, performing position closed loop of any hydraulic actuator equipped with analog, encoder or SSI position transducer. S* option add alternated p/Q control to the basic position ones.
Atos also supplies complete servoactuators integrating servocylinder, digital servoproportional valve and axis controller, fully assembled and tested. For more information consult Atos Technical Office.

10 SAFETY OPTIONS - only for LES

Atos range of proportional directional valves, provides functional safety options **/U** and **/K** ,
designed to accomplish a safety function, intended to reduce the risk in process control systems.

SAFETY CERTIFIED

They are **TÜV certified** in compliance to **IEC 61508 up to SIL 3 and ISO 13849 up to category 4, PL e**

Safe double power supply, option **/U**: the driver has separate power supplies for logic and solenoids. The safe condition is reached by cutting the electrical supply to solenoids, while electronics remains active for monitoring functions and fieldbus communication, see tech table **FY100**

Safety function via on/off signals, option **/K**: upon a disable command, the driver checks the spool position and it provides an on/off acknowledgement signal only when the valve is in safe condition, see tech table **FY200**

11 GENERAL CHARACTERISTICS

Assembly position	Any position
Subplate surface finishing to ISO 4401	Acceptable roughness index: Ra ≤0,8, recommended Ra 0,4 – Flatness ratio 0,01/100
MTTFd valves according to EN ISO 13849	75 years, for further details see technical table P007
Ambient temperature range	**Standard** = -20°C ÷ +60°C **/PE** option = -20°C ÷ +60°C **/BT** option = -40°C ÷ +60°C
Storage temperature range	**Standard** = -20°C ÷ +70°C **/PE** option = -20°C ÷ +70°C **/BT** option = -40°C ÷ +70°C
Surface protection	Zinc coating with black passivation, galvanic treatment (driver housing)
Corrosion resistance	Salt spray test (EN ISO 9227) > 200 h
Vibration resistance	See technical table G004
Compliance	CE according to EMC directive 2014/30/EU (Immunity: EN 61000-6-2; Emission: EN 61000-6-3) RoHS Directive 2011/65/EU as last update by 2015/863/EU REACH Regulation (EC) n°1907/2006

12 HYDRAULIC CHARACTERISTICS - based on mineral oil ISO VG 46 at 50 °C

Valve model	DPZO-*-1	DPZO-*-2			DPZO-*-4	DPZO-*-4M	DPZO-*-6	DPZO-*-8
Pressure limits [bar]	ports **P, A, B, X** = 350; **T** = 250 (10 for option /D); **Y** = 10;							
Spool type and size	**L5, DL5**	**L3**	**L5, DL5**	**T5**	**L5, DL5**		**L5**	
Nominal flow Δp P-T [l/min] **(1)** Δp= 10 bar	100	160	250	190	480	550	640	1200
Δp= 30 bar	160	270	430	330	830	950	1100	2000
Max permissible flow [l/min]	180	400	550	550	1000	1100	1600	3500
Piloting pressure [bar]	min. = 25; max = 350 (option /G advisable for pilot pressure > 150 bar)							
Piloting volume [cm³/min]	1,4	3,7			9	11,3	21,6	39,8
Piloting flow **(2)** [l/min]	3,5	9			18	20	19	24
Leakage **(3)** Pilot [cm³/min]	100 / 300	150 / 450			200 / 600	200 / 600	900 / 2800	900 / 2800
Main stage [l/min]	0,4 / 1,2	0,6 / 2,5			1,0 / 4,0	1,0 / 4,0	3,0 / 9,0	6,0 / 20
Response time **(4)** [ms]	≤ 25	≤ 25			≤ 30	≤ 35	≤ 80	≤ 100
Hysteresis	≤ 0,1 [%of max regulation]							
Repeatability	± 0,1 [%of max regulation]							
Thermal drift	zero point displacement < 1% at ΔT = 40°C							

(1) For different Δp, the max flow is in accordance to the diagrams in section 15.2
(2) With step reference input signal 0 ÷100 %
(3) At p = 100/350 bar
(4) 0-100% step signal, see detailed diagrams in section 15.3

13 ELECTRICAL CHARACTERISTICS

Power supplies	Nominal : +24 VDC Rectified and filtered : VRMS = 20 ÷ 32 VMAX (ripple max 10 % VPP)				
Max power consumption	50 W				
Max. solenoid current	2,6 A				
Coil resistance R at 20°C	3 ÷ 3,3 Ω				
Analog input signals	Voltage: range ±10 VDC (24 VMAX tolerant) Input impedance: Ri > 50 kΩ Current: range ±20 mA Input impedance: Ri = 500 Ω				
Monitor outputs	Output range: voltage ±10 VDC @ max 5 mA current ±20 mA @ max 500 Ω load resistance				
Enable input	Range: 0 ÷ 5 VDC (OFF state), 9 ÷ 24 VDC (ON state), 5 ÷ 9 VDC (not accepted); Input impedance: Ri > 10 kΩ				
Fault output	Output range: 0 ÷ 24 VDC (ON state > [power supply - 2 V] ; OFF state < 1 V) @ max 50 mA; external negative voltage not allowed (e.g. due to inductive loads)				
Pressure/Force transducer power supply (only for SP, SF, SL)	+24VDC @ max 100 mA (E-ATR-8 see tech table **GS465**)				
Alarms	Solenoid not connected/short circuit, cable break with current reference signal, over/under temperature, valve spool transducer malfunctions, alarms history storage function				
Insulation class	H (180°) Due to the occurring surface temperatures of the solenoid coils, the European standards ISO 13732-1 and EN982 must be taken into account				
Protection degree to DIN EN60529	IP66 / IP67 with mating connectors				
Duty factor	Continuous rating (ED=100%)				
Tropicalization	Tropical coating on electronics PCB				
Additional characteristics	Short circuit protection of solenoid's current supply; 3 leds for diagnostic (only for LES); spool position control (SN) or pressure/force control (SP, SF, SL) by P.I.D. with rapid solenoid switching; protection against reverse polarity of power supply				
Communication interface	USB Atos ASCII coding	IO-Link Interface and System Specification 1.1.3	CANopen EN50325-4 + DS408	PROFIBUS DP EN50170-2/IEC61158	EtherCAT POWERLINK EtherNet/IP PROFINET IO RT/IRT IEC 61158
Communication physical layer	not insulated USB 2.0+USB OTG	SDCI class port B	optical insulated CAN ISO11898	optical insulated RS485	Fast Ethernet, insulated 100 Base TX
Recommended wiring cable	LiYCY shielded cables, see section 24				

Note: a maximum time of 800 ms (depending on communication type) has to be considered between the driver energizing with the 24 VDC power supply and when the valve is ready to operate. During this time the current to the valve coils is switched to zero.

14 SEALS AND HYDRAULIC FLUIDS - for other fluids not included in below table, consult our technical office

Seals, recommended fluid temperature	NBR seals (standard) = -20°C ÷ +60°C, with HFC hydraulic fluids = -20°C ÷ +50°C FKM seals (/PE option) = -20°C ÷ +80°C NBR low temp. seals (/BT option) = -40°C ÷ +60°C, with HFC hydraulic fluids = -20°C ÷ +50°C		
Recommended viscosity	20÷100 mm²/s - max allowed range 15 ÷ 380 mm²/s		
Max fluid contamination level — normal operation	ISO4406 class 18/16/13 NAS1638 class 7		see also filter section at www.atos.com or KTF catalog
Max fluid contamination level — longer life	ISO4406 class 16/14/11 NAS1638 class 5		
Hydraulic fluid	**Suitable seals type**	**Classification**	**Ref. Standard**
Mineral oils	NBR, FKM, NBR low temp.	HL, HLP, HLPD, HVLP, HVLPD	DIN 51524
Flame resistant without water	FKM	HFDU, HFDR	ISO 12922
Flame resistant with water	NBR, NBR low temp.	HFC	

15 DIAGRAMS (based on mineral oil ISO VG 46 at 50 °C)

15.1 Regulation diagrams (values measure at Δp 10 bar P-T)

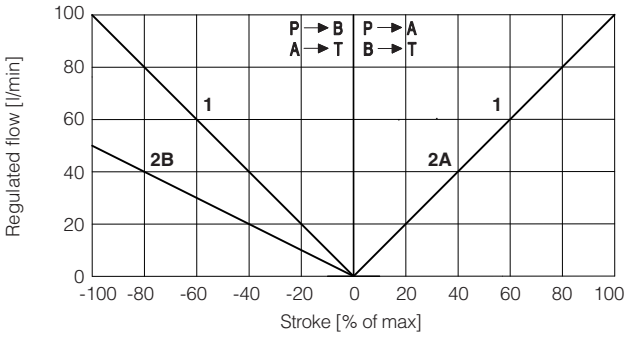

DPZO-1: **1** = L5 **2A** = DL5 (P → A, A → T)
2B = DL5 (P → B, B → T)

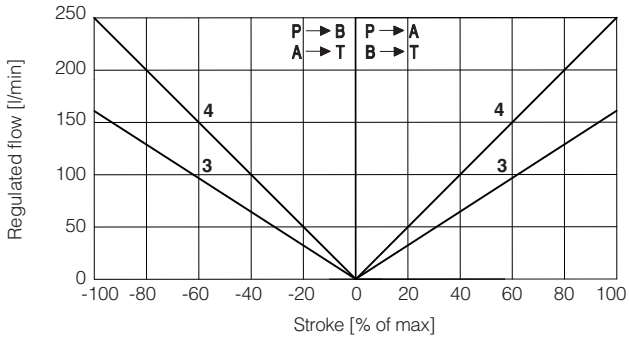

DPZO-2: **3** = L3 **4** = L5

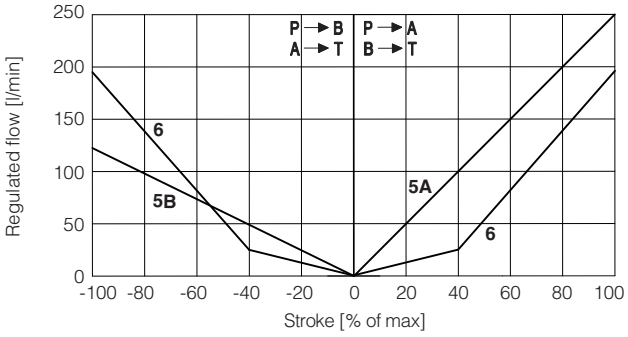

DPZO-2: **5A** = DL5 (P → A, A → T) **6** = T5
5B = DL5 (P → B, B → T)

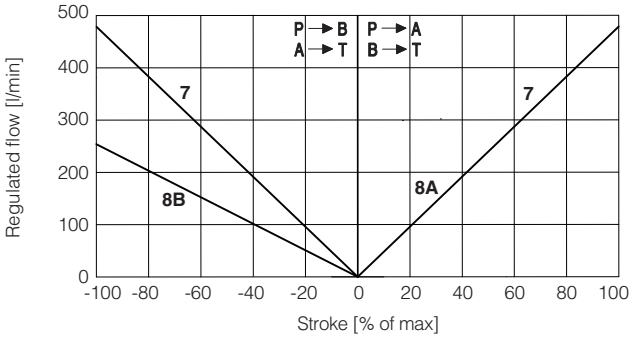

DPZO-4: **7** = L5 **8A** = DL5 (P → A, A → T)
8B = DL5 (P → B, B → T)

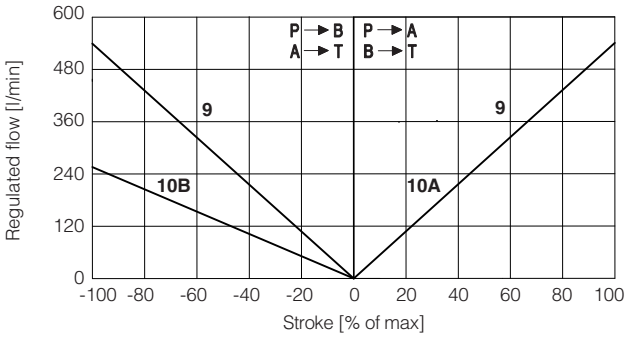

DPZO-4M: **9** = L5 **10A** = DL5 (P → A, A → T)
10B = DL5 (P → B, B → T)

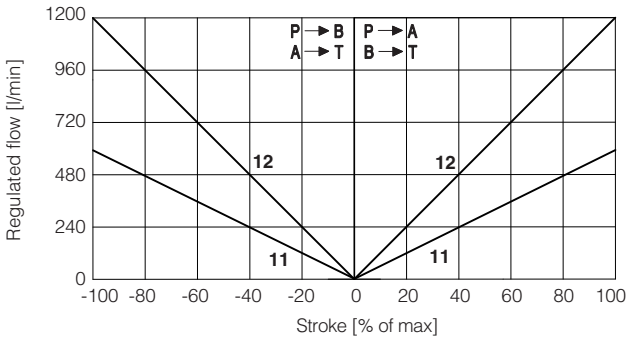

DPZO-6: **11** = L5
DPZO-8: **12** = L5

15.2 Flow /Δp diagram - stated at 100% of spool stroke

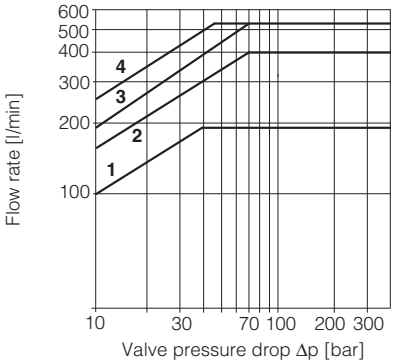

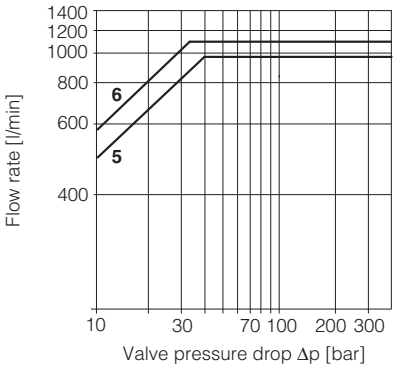

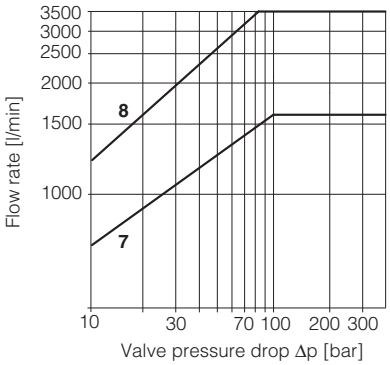

DPZO-1:
1 = spools L5, DL5

DPZO-2:
2 = spools L3
3 = spool T5
4 = spools L5, DL5

DPZO-4:
5 = spools L5, DL5

DPZO-4M:
6 = spools L5, DL5

DPZO-6:
7 = L5

DPZO-8:
8 = L5

Note: Hydraulic configuration vs. reference signal for configurations 60 and 70 (standard and option /B)

Reference signal $\left.\begin{matrix}0 \div +10\ V \\ 12 \div 20\ mA\end{matrix}\right\}$ P → A / B → T

Reference signal $\left.\begin{matrix}0 \div -10\ V \\ 4 \div 12\ mA\end{matrix}\right\}$ P → B / A → T

15.3 Response time

The response times in below diagrams are measured at different steps of the reference input signal. They have to be considered as average values.

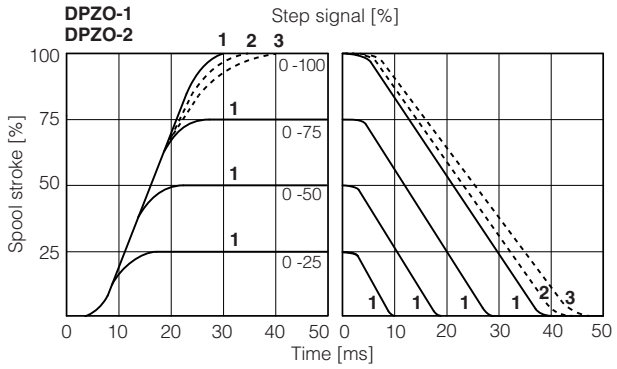

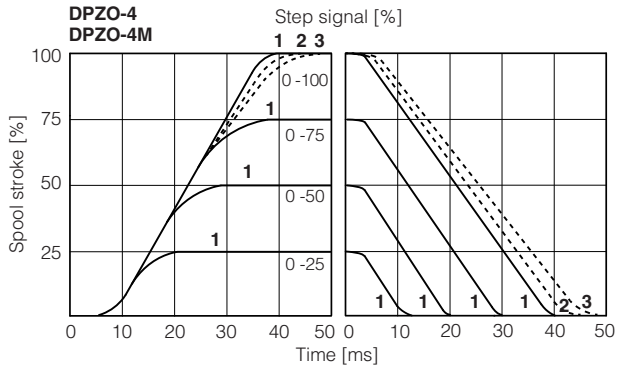

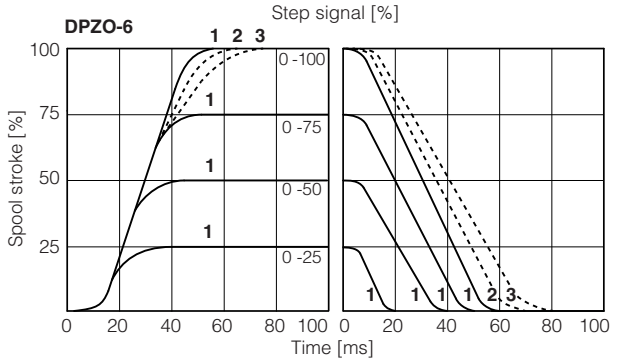

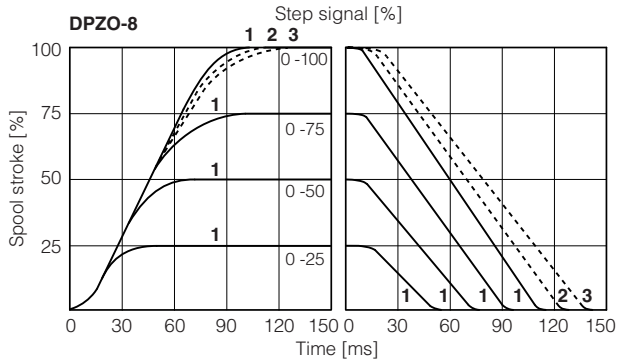

1 = dynamic **2** = balanced (*) **3** = smooth (*)

(*) Response time is represented only for 0-100% step; for intermediate steps, the response time increment of presets 2 (balanced) and 3 (smooth) with respect to the preset 1 (dynamic) is proportional to the step amplitude of the reference input signal

15.4 Bode diagrams DPZO-1, DPZO-2

Stated at nominal hydraulic conditions

± 5% nominal stroke:
1 = dynamic
2 = balanced
3 = smooth

± 100% nominal stroke:
4 = dynamic
5 = balanced
6 = smooth

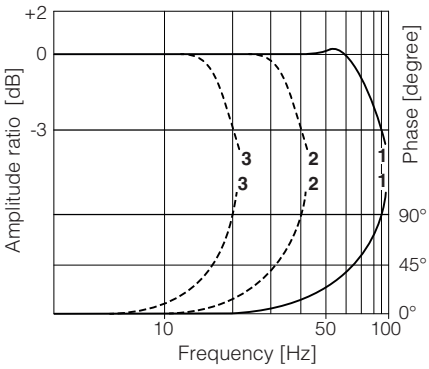

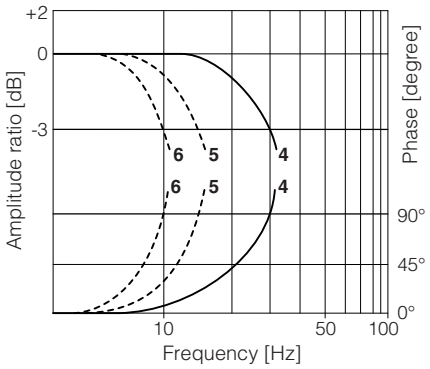

15.5 Bode diagrams DPZO-4, DPZO-4M

Stated at nominal hydraulic conditions

± 5% nominal stroke:
1 = dynamic
2 = balanced
3 = smooth

± 100% nominal stroke:
4 = dynamic
5 = balanced
6 = smooth

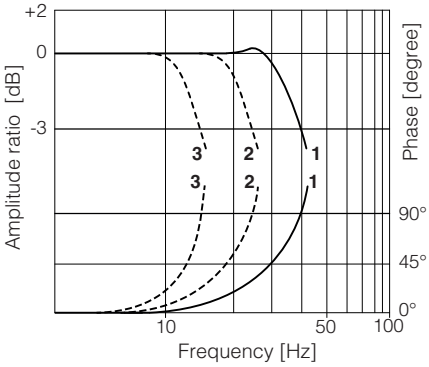

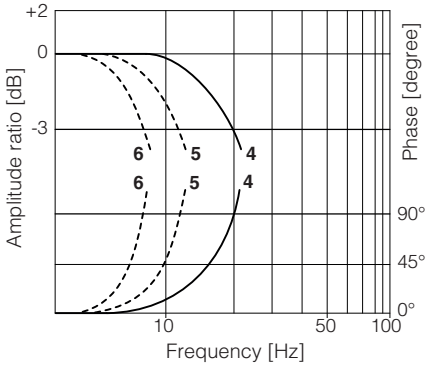

15.6 Bode diagrams DPZO-6

Stated at nominal hydraulic conditions

± 5% nominal stroke:
1 = dynamic
2 = balanced
3 = smooth

± 100% nominal stroke:
4 = dynamic
5 = balanced
6 = smooth

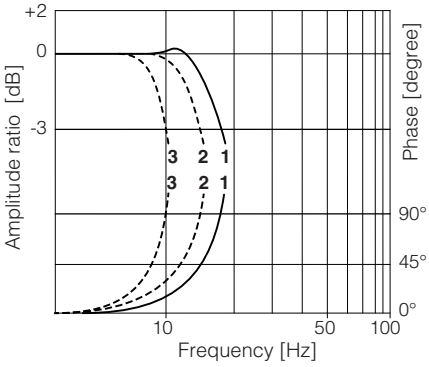

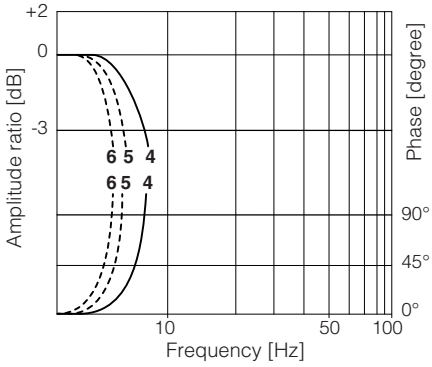

15.7 Bode diagrams DPZO-8

Stated at nominal hydraulic conditions

± 5% nominal stroke:
1 = dynamic
2 = balanced
3 = smooth

± 100% nominal stroke:
4 = dynamic
5 = balanced
6 = smooth

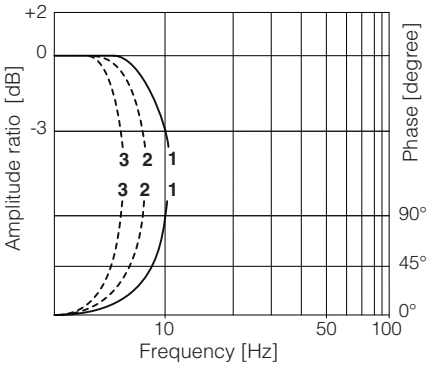

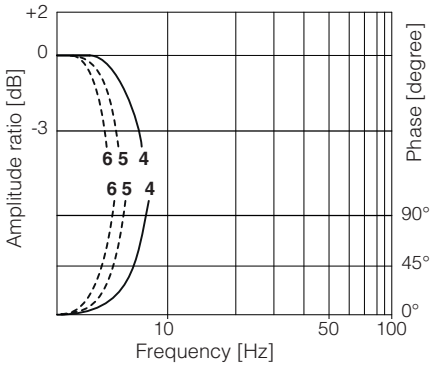

15.8 Pressure gain

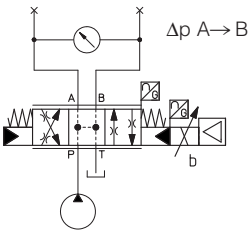

9 = DPZO-1

10 = DPZO-2
DPZO-4
DPZO-4M
DPZO-6
DPZO-8

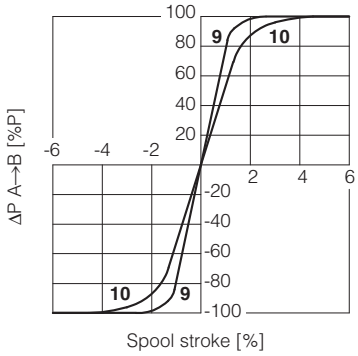

20 POWER SUPPLY AND SIGNALS SPECIFICATIONS

Generic electrical output signals of the valve (e.g. fault or monitor signals) must not be directly used to activate safety functions, like to switch-ON/OFF the machine's safety components, as prescribed by the European standards (Safety requirements of fluid technology systems and components-hydraulics, ISO 4413).

For **TEB-SN-IL** signals see section 21
For certified safety options: **/U** see tech. table **FY100** and **/K** see tech. table **FY200**

20.1 Power supply (V+ and V0)

The power supply must be appropriately stabilized or rectified and filtered: apply at least a 10000 μF/40 V capacitance to single phase rectifiers or a 4700 μF/40 V capacitance to three phase rectifiers. In case of separate power supply see 20.2.

⚠ A safety fuse is required in series to each power supply: 2,5 A time lag fuse.

20.2 Power supply for driver's logic and communication (VL+ and VL0) - only for **TES** with **/Z** option and for **TES-SP, SF, SL** with fieldbus

The power supply for driver's logic and communication must be appropriately stabilized or rectified and filtered: apply at least a 10000 μF/40 V capacitance to single phase rectifiers or a 4700 μF/40 V capacitance to three phase rectifiers.
The separate power supply for driver's logic on pin 9 and 10, allow to remove solenoid power supply from pin 1 and 2 maintaining active the diagnostics, USB and fieldbus communications.

⚠ A safety fuse is required in series to each driver's logic and communication power supply: 500 mA fast fuse.

20.3 Flow reference input signal (Q_INPUT+)

The driver controls in closed loop the valve spool position proportionally to the external reference input signal.
Reference input signal is factory preset according to selected valve code, defaults are ±10 VDC for standard and 4 ÷ 20 mA for /I option.
Input signal can be reconfigured via software selecting between voltage and current, within a maximum range of ±10 VDC or ± 20 mA.
Drivers with fieldbus interface can be software set to receive reference signal directly from the machine control unit (fieldbus reference).
Analog reference input signal can be used as on-off commands with input range 0 ÷ 24VDC.

20.4 Pressure or force reference input signal (F_INPUT+) - only for **TES-SP, SF, SL**

Functionality of F_INPUT+ signal (pin 7), is used as reference for the driver pressure/force closed loop (see tech. table **FS500**).
Reference input signal is factory preset according to selected valve code, defaults are ±10 VDC for standard and 4 ÷ 20 mA for /I option.
Input signal can be reconfigured via software selecting between voltage and current, within a maximum range of ±10 VDC or ± 20 mA.
Drivers with fieldbus interface can be software set to receive reference signal directly by the machine control unit (fieldbus reference).
Analog reference input signal can be used as on-off commands with input range 0 ÷ 24VDC.

20.5 Flow monitor output signal (Q_MONITOR) - not for **/F**

The driver generates an analog output signal proportional to the actual spool position of the valve; the monitor output signal can be software set to show other signals available in the driver (e.g. analog reference, fieldbus reference, pilot spool position).
Monitor output signal is factory preset according to selected valve code, defaults are ±10 VDC for standard and 4 ÷ 20 mA for /I option.
Output signal can be reconfigured via software selecting between voltage and current, within a maximum range of ±10 VDC or ± 20 mA.

20.6 Pressure or force monitor output signal (F_MONITOR) - only for **TES-SP, SF, SL**

The driver generates an analog output signal proportional to alternated pressure/force control; the monitor output signal can be software set to show other signals available in the driver (e.g. analog reference, force reference).
Monitor output signal is factory preset according to selected valve code, defaults are ±10 VDC for standard and 4 ÷ 20 mA for /I option.
Output signal can be reconfigured via software selecting between voltage and current, within a maximum range of ±10 VDC or ± 20 mA.

20.7 Enable input signal (ENABLE) - not for standard and **/F**

To enable the driver, supply a 24 VDC on pin 3 (pin C): Enable input signal allows to enable/disable the current supply to the solenoid, without removing the electrical power supply to the driver; it is used to active the communication and the other driver functions when the valve must be disabled for safety reasons. This condition **does not comply** with norms IEC 61508 and ISO 13849.
Enable input signal can be used as generic digital input by software selection.

20.8 Repeat enable output signal (R_ENABLE) - only for **TEB-SN-NP** with **/Z** option

Repeat enable is used as output repeater signal of enable input signal (see 20.7).

20.9 Fault output signal (FAULT) - not for standard and **/Q**

Fault output signal indicates fault conditions of the driver (solenoid short circuits/not connected, reference signal cable broken for 4 ÷ 20 mA input, spool position transducer cable broken, etc.). Fault presence corresponds to 0 VDC, normal working corresponds to 24 VDC.
Fault status is not affected by the Enable input signal. Fault output signal can be used as digital output by software selection.

20.10 Remote pressure/force transducer input signal - only for **TES-SP, SF, SL**

Analog remote pressure transducers or load cell can be directly connected to the driver (see 22.5).
Analog input signal is factory preset according to selected valve code, defaults are ±10 VDC for standard and 4 ÷ 20 mA for /C option.
Input signal can be reconfigured via software selecting between voltage and current, within a maximum range of ±10 VDC or ± 20 mA.
Refer to pressure/force transducer characteristics to select the transducer type according to specific application requirements (see tech table **FS500**).

20.11 Multiple PID selection (D_IN0 and D_IN1) - only **NP** execution for **TES-SP, SF, SL**

Two on-off input signals are available on the main connector to select one of the four pressure (force) PID parameters setting, stored into the driver.
Switching the active setting of pressure PID during the machine cycle allows to optimize the system dynamic response in different hydraulic working conditions (volume, flow, etc.).
Supply a 24 VDC or a 0 VDC on pin 9 and/or pin 10, to select one of the PID settings as indicated by binary code table at side. Gray code can be selected by software.

	PID SET SELECTION			
PIN	**SET 1**	**SET 2**	**SET 3**	**SET 4**
9	0	24 VDC	0	24 VDC
10	0	0	24 VDC	24 VDC

20 POWER SUPPLY AND SIGNALS SPECIFICATIONS

Generic electrical output signals of the valve (e.g. fault or monitor signals) must not be directly used to activate safety functions, like to switch-ON/OFF the machine's safety components, as prescribed by the European standards (Safety requirements of fluid technology systems and components-hydraulics, ISO 4413).

For **LEB-SN-IL** signals see section 21

For certified safety options: **/U** see tech. table **FY100** and **/K** see tech. table **FY200**

20.1 Power supply (V+ and V0)

The power supply must be appropriately stabilized or rectified and filtered: apply at least a 10000 μF/40 V capacitance to single phase rectifiers or a 4700 μF/40 V capacitance to three phase rectifiers. In case of separate power supply see 20.2.

⚠ A safety fuse is required in series to each power supply: 2,5 A time lag fuse.

20.2 Power supply for driver's logic and communication (VL+ and VL0) - only for **LES** with **/Z** option and for **LES-SP, SF, SL** with fieldbus

The power supply for driver's logic and communication must be appropriately stabilized or rectified and filtered: apply at least a 10000 μF/40 V capacitance to single phase rectifiers or a 4700 μF/40 V capacitance to three phase rectifiers.

The separate power supply for driver's logic on pin 9 and 10, allow to remove solenoid power supply from pin 1 and 2 maintaining active the diagnostics, USB and fieldbus communications.

⚠ A safety fuse is required in series to each driver's logic and communication power supply: 500 mA fast fuse.

20.3 Flow reference input signal (Q_INPUT+)

The driver controls in closed loop the valve spool position proportionally to the external reference input signal.

Reference input signal is factory preset according to selected valve code, defaults are ±10 VDC for standard and 4 ÷ 20 mA for /I option.

Input signal can be reconfigured via software selecting between voltage and current, within a maximum range of ±10 VDC or ± 20 mA.

Drivers with fieldbus interface can be software set to receive reference signal directly from the machine control unit (fieldbus reference).

Analog reference input signal can be used as on-off commands with input range 0 ÷ 24VDC.

20.4 Pressure or force reference input signal (F_INPUT+) - only for **LES-SP, SF, SL**

Functionality of F_INPUT+ signal (pin 7), is used as reference for the driver pressure/force closed loop (see tech. table **FS500**).

Reference input signal is factory preset according to selected valve code, defaults are ±10 VDC for standard and 4 ÷ 20 mA for /I option.

Input signal can be reconfigured via software selecting between voltage and current, within a maximum range of ±10 VDC or ± 20 mA.

Drivers with fieldbus interface can be software set to receive reference signal directly by the machine control unit (fieldbus reference).

Analog reference input signal can be used as on-off commands with input range 0 ÷ 24VDC.

20.5 Flow monitor output signal (Q_MONITOR) - not for **/F**

The driver generates an analog output signal proportional to the actual spool position of the valve; the monitor output signal can be software set to show other signals available in the driver (e.g. analog reference, fieldbus reference, pilot spool position).

Monitor output signal is factory preset according to selected valve code, defaults are ±10 VDC for standard and 4 ÷ 20 mA for /I option.

Output signal can be reconfigured via software selecting between voltage and current, within a maximum range of ±10 VDC or ± 20 mA.

20.6 Pressure or force monitor output signal (F_MONITOR) - only for **LES-SP, SF, SL**

The driver generates an analog output signal proportional to alternated pressure/force control; the monitor output signal can be software set to show other signals available in the driver (e.g. analog reference, force reference).

Monitor output signal is factory preset according to selected valve code, defaults are ±10 VDC for standard and 4 ÷ 20 mA for /I option.

Output signal can be reconfigured via software selecting between voltage and current, within a maximum range of ±10 VDC or ± 20 mA.

20.7 Enable input signal (ENABLE) - not for standard and **/F**

To enable the driver, supply a 24 VDC on pin 3 (pin C): Enable input signal allows to enable/disable the current supply to the solenoid, without removing the electrical power supply to the driver; it is used to active the communication and the other driver functions when the valve must be disabled for safety reasons. This condition **does not comply** with norms IEC 61508 and ISO 13849.

Enable input signal can be used as generic digital input by software selection.

20.8 Repeat enable output signal (R_ENABLE) - only for **LEB-SN-NP** with **/Z** option

Repeat enable is used as output repeater signal of enable input signal (see 20.7).

20.9 Fault output signal (FAULT) - not for standard and **/Q**

Fault output signal indicates fault conditions of the driver (solenoid short circuits/not connected, reference signal cable broken for 4 ÷ 20 mA input, spool position transducer cable broken, etc.). Fault presence corresponds to 0 VDC, normal working corresponds to 24 VDC.

Fault status is not affected by the Enable input signal. Fault output signal can be used as digital output by software selection.

20.10 Remote pressure/force transducer input signal - only for **LES-SP, SF, SL**

Analog remote pressure transducers or load cell can be directly connected to the driver (see 22.5).

Analog input signal is factory preset according to selected valve code, defaults are ±10 VDC for standard and 4 ÷ 20 mA for /C option.

Input signal can be reconfigured via software selecting between voltage and current, within a maximum range of ±10 VDC or ± 20 mA.

Refer to pressure/force transducer characteristics to select the transducer type according to specific application requirements (see tech table **FS500**).

20.11 Multiple PID selection (D_IN0 and D_IN1) - only **NP** execution for **LES-SP, SF, SL**

Two on-off input signals are available on the main connector to select one of the four pressure (force) PID parameters setting, stored into the driver.

Switching the active setting of pressure PID during the machine cycle allows to optimize the system dynamic response in different hydraulic working conditions (volume, flow, etc.).

Supply a 24 VDC or a 0 VDC on pin 9 and/or pin 10, to select one of the PID settings as indicated by binary code table at side. Gray code can be selected by software.

	PID SET SELECTION			
PIN	SET 1	SET 2	SET 3	SET 4
9	0	24 VDC	0	24 VDC
10	0	0	24 VDC	24 VDC

21 IO-LINK SIGNALS SPECIFICATIONS - only for **LEB-SN-IL**

21.1 Power supply for IO-Link communication (L+ and L-)

The IO-Link master provides dedicated 24 VDC power supply for IO-Link communication.
Maximum power consumption: 2 W
Internal electrical isolation of power L+, L- from P24, N24

21.2 Power supply for driver's logic and valve regulation (P24 and N24)

The IO-Link master provides dedicated 24 VDC power supply for valve regulation, logics and diagnostics.
Maximum power consumption: 50 W
Internal electrical isolation of power P24, N24 from L+, L-

21.3 IO-Link data line (C/Q)

C/Q signal is used to establish communication between IO-Link master and valve.

22 ELECTRONIC CONNECTIONS

For electronic connection of certified safety options **/U** see tech. table **FY100** and **/K** see tech. table **FY200**

22.1 Main connector signals - 7 pin (A1) **Standard**, **/Q** and **/F** options

PIN	Standard	/Q	/F	TECHNICAL SPECIFICATIONS	NOTES
A	**V+**			Power supply 24 VDC	Input - power supply
B	**V0**			Power supply 0 VDC	Gnd - power supply
C	**AGND**		**AGND**	Analog ground	Gnd - analog signal
		ENABLE		Enable (24 VDC) or disable (0 VDC) the valve, referred to V0	Input - on/off signal
D	**Q_INPUT+**			Flow reference input signal: ±10 VDC / ±20 mA maximum range Defaults are ±10 VDC for standard and 4 ÷ 20 mA for /I option	Input - analog signal **Software selectable**
E	**INPUT-**			Negative reference input signal for Q_INPUT+	Input - analog signal
F	**Q_MONITOR** referred to: AGND V0			Flow monitor output signal: ±10 VDC / ±20 mA maximum range Defaults are ±10 VDC for standard and 4 ÷ 20 mA for /I option	Output - analog signal **Software selectable**
			FAULT	Fault (0 VDC) or normal working (24 VDC)	Output - on/off signal
G	**EARTH**			Internally connected to the driver housing	

22.2 Main connector signals - 12 pin (A2) **/Z** option and **LES-SP, SF, SL**

PIN	LEB-SN /Z	LES-SN /Z	LES-SP, SF, SL Fieldbus	LES-SP, SF, SL NP	TECHNICAL SPECIFICATIONS	NOTES
1	**V+**				Power supply 24 VDC	Input - power supply
2	**V0**				Power supply 0 VDC	Gnd - power supply
3	**ENABLE** referred to: V0	VL0	VL0	V0	Enable (24 VDC) or disable (0 VDC) the valve	Input - on/off signal
4	**Q_INPUT+**				Flow reference input signal: ±10 VDC / ±20 mA maximum range Defaults are ±10 VDC for standard and 4 ÷ 20 mA for /I option	Input - analog signal **Software selectable**
5	**INPUT-**				Negative reference input signal for Q_INPUT+ and F_INPUT+	Input - analog signal
6	**Q_MONITOR** referred to: AGND	VL0	VL0	V0	Flow monitor output signal: ±10 VDC / ±20 mA maximum range Defaults are ±10 VDC for standard and 4 ÷ 20 mA for /I option	Output - analog signal **Software selectable**
7	**AGND**				Analog ground	Gnd - analog signal
		NC			Do not connect	
			F_INPUT+		Pressure/Force reference input signal: ±10 VDC / ±20 mA maximum range Defaults are ±10 VDC for standard and 4 ÷ 20 mA for /I option	Input - analog signal **Software selectable**
8	**R_ENABLE**				Repeat enable, output repeater signal of enable input, referred to V0	Output - on/off signal
		NC			Do not connect	
			F_MONITOR referred to: VL0	V0	Pressure/Force monitor output signal: ±10 VDC / ±20 mA maximum range Defaults are ±10 VDC for standard and 4 ÷ 20 mA for /I option	Output - analog signal **Software selectable**
9	**NC**				Do not connect	
		VL+			Power supply 24 VDC for driver's logic and communication	Input - power supply
				D_IN0	Multiple pressure/force PID selection, referred to V0	Input - on/off signal
10	**NC**				Do not connect	
		VL0			Power supply 0 VDC for driver's logic and communication	Gnd - power supply
				D_IN1	Multiple pressure/force PID selection (not available for SF), referred to V0	Input - on/off signal
11	**FAULT** referred to: V0	VL0	VL0	V0	Fault (0 VDC) or normal working (24 VDC)	Output - on/off signal
PE	**EARTH**				Internally connected to the driver housing	

Note: do not disconnect VL0 before VL+ when the driver is connected to PC USB port

22.3 IO-Link connector signals - M12 - 5 pin - Coding A, port class B (A) only for **LEB-SN-IL**

PIN	SIGNAL	TECHNICAL SPECIFICATIONS	NOTES
1	**L+**	Power supply 24 VDC for IO-Link communication	Input - power supply
2	**P24**	Power supply 24 VDC for valve regulation, logics and diagnostics	Input - power supply
3	**L-**	Power supply 0 VDC for IO-Link communication	Gnd - power supply
4	**C/Q**	IO-Link data line	Input / Output - signal
5	**N24**	Power supply 0 VDC for valve regulation, logics and diagnostics	Gnd - power supply

Note: L+, L- and P24, N24 are electrically isolated

22.4 Communications connectors (B) - (C)

(B) **USB connector - M12 - 5 pin** always present		
PIN	**SIGNAL**	**TECHNICAL SPECIFICATION** (1)
1	**+5V_USB**	Power supply
2	**ID**	Identification
3	**GND_USB**	Signal zero data line
4	**D-**	Data line -
5	**D+**	Data line +

(C1) (C2) **BC fieldbus execution, connector - M12 - 5 pin**		
PIN	**SIGNAL**	**TECHNICAL SPECIFICATION** (1)
1	**CAN_SHLD**	Shield
2	**not used**	(C1) - (C2) pass-through connection (2)
3	**CAN_GND**	Signal zero data line
4	**CAN_H**	Bus line (high)
5	**CAN_L**	Bus line (low)

(C1) (C2) **BP fieldbus execution, connector - M12 - 5 pin**		
PIN	**SIGNAL**	**TECHNICAL SPECIFICATION** (1)
1	**+5V**	Termination supply signal
2	**LINE-A**	Bus line (high)
3	**DGND**	Data line and termination signal zero
4	**LINE-B**	Bus line (low)
5	**SHIELD**	

(C1) (C2) **EH, EW, EI, EP fieldbus execution, connector - M12 - 4 pin**		
PIN	**SIGNAL**	**TECHNICAL SPECIFICATION** (1)
1	**TX+**	Transmitter
2	**RX+**	Receiver
3	**TX-**	Transmitter
4	**RX-**	Receiver
Housing	**SHIELD**	

(1) Shield connection on connector's housing is recommended

(2) Pin 2 can be fed with external +5V supply of CAN interface

22.5 Remote pressure/force transducer connector - M12 - 5 pin - only for **SP, SF, SL** (D)

PIN	SIGNAL	TECHNICAL SPECIFICATION	NOTES	(D1) **SP, SL - Single transducer** (1)		(D2) **SF - Double transducers** (1)	
				Voltage	**Current**	**Voltage**	**Current**
1	**VF +24V**	Power supply +24VDC	Output - power supply	Connect	Connect	Connect	Connect
2	**TR1**	1st signal transducer: ±10 VDC / ±20 mA maximum range	Input - analog signal **Software selectable**	Connect	Connect	Connect	Connect
3	**AGND**	Common gnd for transducer power and signals	Common gnd	Connect	/	Connect	/
4	**TR2**	2nd signal transducer: ±10 VDC / ±20 mA maximum range	Input - analog signal **Software selectable**	/	/	Connect	Connect
5	**NC**	Not connect		/	/	/	/

(1) Single/double transducer configuration is software selectable

Remote pressure transducers connection - example

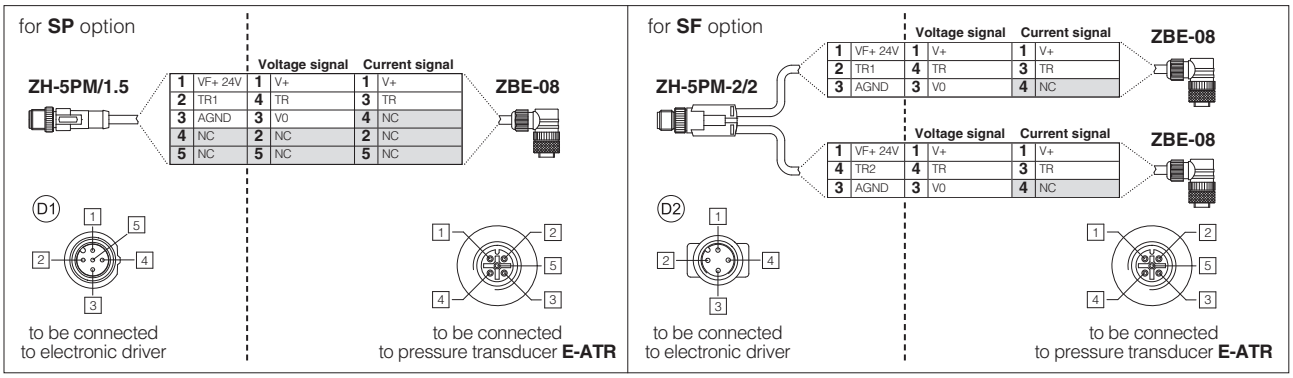

Note: pin layout always referred to driver's view

22.6 LEB-SN-NP connections layout

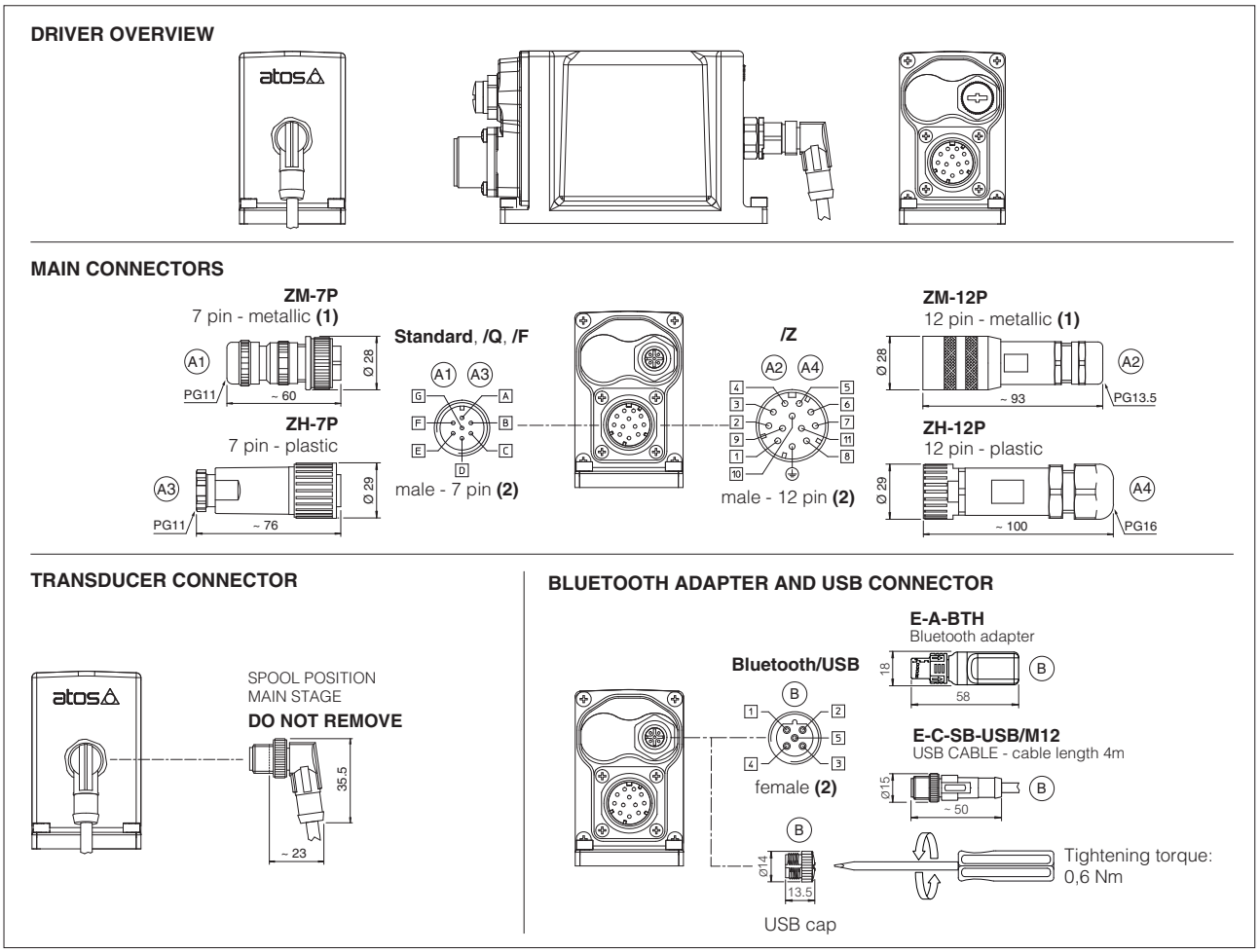

(1) Use of metallic connectors is strongly recommended in order to fulfill EMC requirements **(2)** Pin layout always referred to driver's view

22.7 LEB-SN-IL connections layout

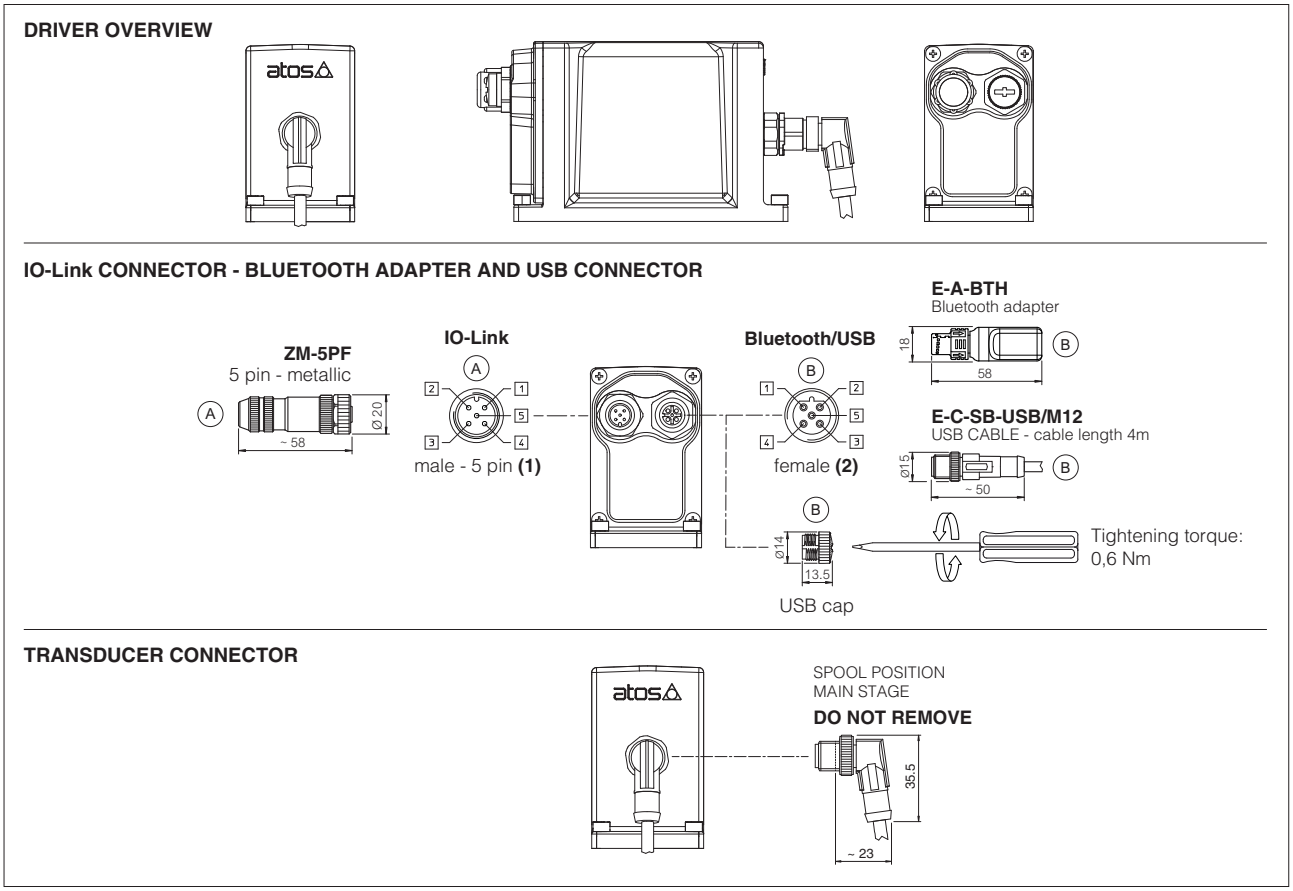

(1) Pin layout always referred to driver's view

22.8 LES connections layout

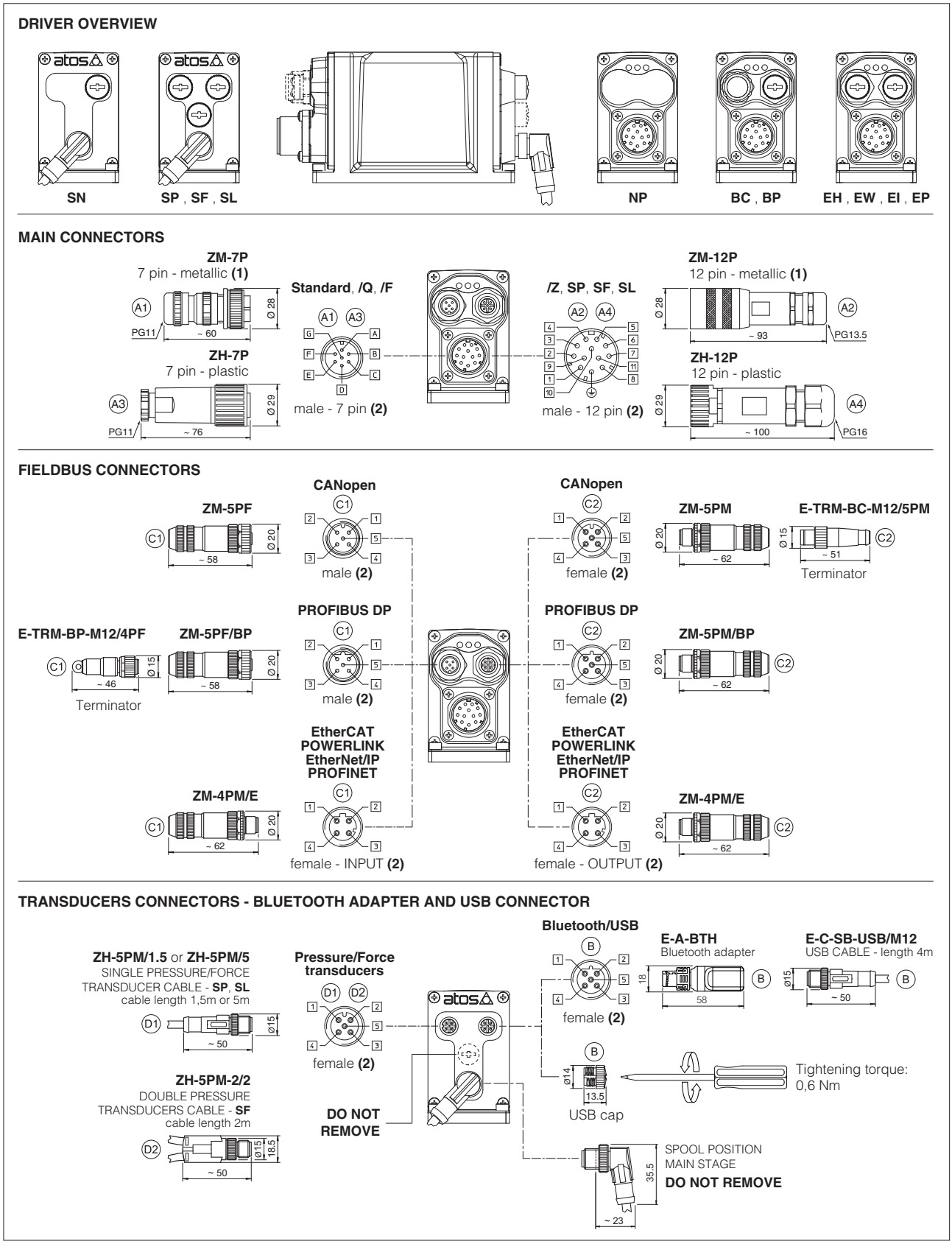

(1) Use of metallic connectors is strongly recommended in order to fulfill EMC requirements **(2)** Pin layout always referred to driver's view

22.9 Diagnostic LEDs - only for LES

Three leds show driver operative conditions for immediate basic diagnostics. Please refer to the driver user manual for detailed information.

FIELDBUS / LEDS	NP Not Present	BC CANopen	BP PROFIBUS DP	EH EtherCAT	EW POWERLINK	EI EtherNet/IP	EP PROFINET
L1	VALVE STATUS			LINK/ACT			
L2	NETWORK STATUS			NETWORK STATUS			
L3	SOLENOID STATUS			LINK/ACT			

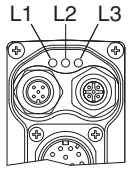

23 IN / OUT FIELDBUS COMMUNICATION CONNECTORS

Two fieldbus communication connectors are always available for digital drivers executions BC, BP, EH, EW, EI, EP. This features allows considerable technical advantages in terms of installation simplicity, wirings reduction and also avoid the usage expensive T-connectors.
For BC and BP executions the fieldbus connectors have an internal pass-through connection and can be used like end point of the fieldbus network, using an external terminator (see tech table **GS500**).
For EH, EW, EI and EP executions the external terminators are not required: each connector is internally terminated.

BC and BP pass-through connection

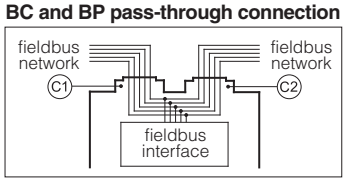

24 CONNECTORS CHARACTERISTICS - to be ordered separately

24.1 Main connectors - 7 pin

CONNECTOR TYPE	POWER SUPPLY AND SIGNALS	POWER SUPPLY AND SIGNALS
CODE	A1 ZM-7P	A3 ZH-7P
Type	7pin female straight circular	7pin female straight circular
Standard	According to MIL-C-5015	According to MIL-C-5015
Material	Metallic	Plastic reinforced with fiber glass
Cable gland	PG11	PG11
Recommended cable	LiYCY 7 x 0,75 mm² max 20 m (logic and power supply) or LiYCY 7 x 1 mm² max 40 m (logic and power supply)	LiYCY 7 x 0,75 mm² max 20 m (logic and power supply) or LiYCY 7 x 1 mm² max 40 m (logic and power supply)
Conductor size	up to 1 mm² - available for 7 wires	up to 1 mm² - available for 7 wires
Connection type	to solder	to solder
Protection (EN 60529)	IP 67	IP 67

24.2 Main connectors - 12 pin

CONNECTOR TYPE	POWER SUPPLY AND SIGNALS	POWER SUPPLY AND SIGNALS
CODE	A2 ZM-12P	A4 ZH-12P
Type	12pin female straight circular	12pin female straight circular
Standard	DIN 43651	DIN 43651
Material	Metallic	Plastic reinforced with fiber glass
Cable gland	PG13,5	PG16
Recommended cable	LiYCY 12 x 0,75 mm² max 20 m (logic and power supply)	LiYCY 10 x 0,14mm² max 40 m (logic) LiYY 3 x 1mm² max 40 m (power supply)
Conductor size	0,5 mm² to 1,5 mm² - available for 12 wires	0,14 mm² to 0,5 mm² - available for 9 wires 0,5 mm² to 1,5 mm² - available for 3 wires
Connection type	to crimp	to crimp
Protection (EN 60529)	IP 67	IP 67

24.3 IO-Link connector - only for **LEB-SN-IL**

CONNECTOR TYPE	IL IO-Link
CODE	A ZM-5PF
Type	5pin female straight circular
Standard	M12 coding A – IEC 61076-2-101
Material	Metallic
Cable gland	Pressure nut - cable diameter 6÷8 mm
Recommended cable	5 x 0,75 mm² max 20 m
Connection type	screw terminal
Protection (EN 60529)	IP 67

24.4 Fieldbus communication connectors

CONNECTOR TYPE	BC CANopen (1)		BP PROFIBUS DP (1)		EH EtherCAT, EW POWERLINK, EI EtherNet/IP, EP PROFINET (2)
CODE	C1 ZM-5PF	C2 ZM-5PM	C1 ZM-5PF/BP	C2 ZM-5PM/BP	C1 C2 ZM-4PM/E
Type	5 pin female straight circular	5 pin male straight circular	5 pin female straight circular	5 pin male straight circular	4 pin male straight circular
Standard	M12 coding A – IEC 61076-2-101		M12 coding B – IEC 61076-2-101		M12 coding D – IEC 61076-2-101
Material	Metallic		Metallic		Metallic
Cable gland	Pressure nut - cable diameter 6÷8 mm		Pressure nut - cable diameter 6÷8 mm		Pressure nut - cable diameter 4÷8 mm
Cable	CANbus Standard (DR 303-1)		PROFIBUS DP Standard		Ethernet standard CAT-5
Connection type	screw terminal		screw terminal		terminal block
Protection (EN 60529)	IP67		IP 67		IP 67

(1) E-TRM-** terminators can be ordered separately - see tech table **GS500**

(2) Internally terminated

24.5 Remote pressure/Force transducer connectors - only for **SP, SF, SL**

CONNECTOR TYPE	SP, SL - Single transducer		SF - Double transducers
CODE	D1 ZH-5PM/1.5	D1 ZH-5PM/5	D2 ZH-5PM-2/2
Type	5 pin male straight circular		4 pin male straight circular
Standard	M12 coding A – IEC 61076-2-101		M12 coding A – IEC 61076-2-101
Material	Plastic		Plastic
Cable gland	Connector moulded on cables 1,5 m length	5 m length	Connector moulded on cables 2 m length
Cable	5 x 0,25 mm²		3 x 0,25 mm² (both cables)
Connection type	molded cable		splitting cable
Protection (EN 60529)	IP 67		IP 67

25 PLUGS LOCATION FOR PILOT/DRAIN CHANNELS

Depending on the position of internal plugs, different pilot/drain configurations can be obtained as shown below.
To modify the pilot/drain configuration, proper plugs must only be interchanged. The plugs have to be sealed using loctite 270.
Standard valves configuration provides internal pilot and external drain.

DPZO-1 **Pilot channels** **Drain channels**

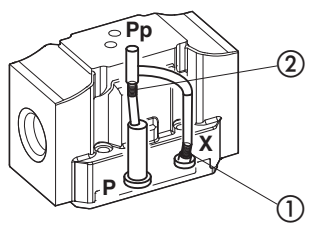

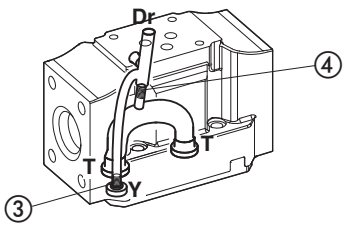

Internal piloting: blinded plug SP-X300F ① in X;
External piloting: blinded plug SP-X300F ② in Pp;
Internal drain: blinded plug SP-X300F ③ in Y;
External drain: blinded plug SP-X300F ④ in Dr.

DPZO-2 **Pilot channels** **Drain channels**

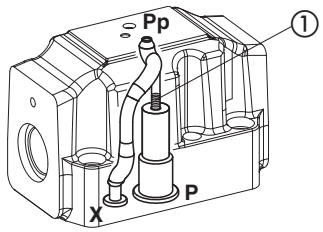

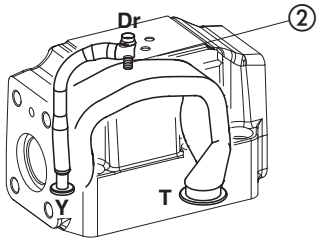

Internal piloting: Without blinded plug SP-X300F ①;
External piloting: Add blinded plug SP-X300F ①;
Internal drain: Without blinded plug SP-X300F ②;
External drain: Add blinded plug SP-X300F ②.

DPZO-4 **Pilot channels** **Drain channels**

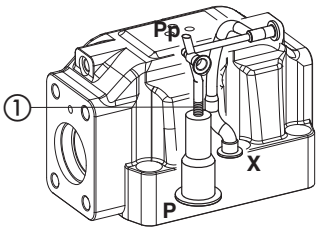

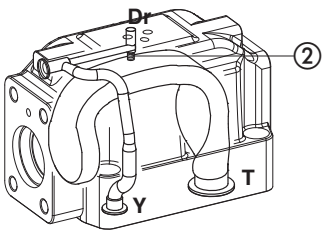

Internal piloting: Without blinded plug SP-X500F ①;
External piloting: Add blinded plug SP-X500F ①;
Internal drain: Without blinded plug SP-X300F ②;
External drain: Add blinded plug SP-X300F ②.

DPZO-6 **Pilot channels** **Drain channels**

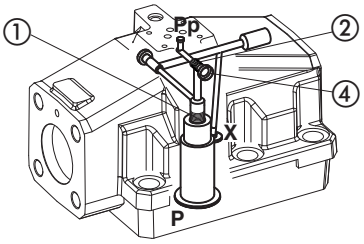

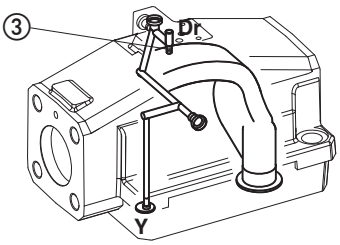

Internal piloting: Without plug ①;
External piloting: Add DIN-908 M16x1,5 in pos ①;
Internal drain: Without blinded plug SP-X300F ③;
External drain: Add blinded plug SP-X300F ③.

DPZO-8 **Pilot channels** **Drain channels**

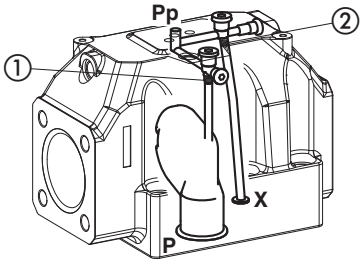

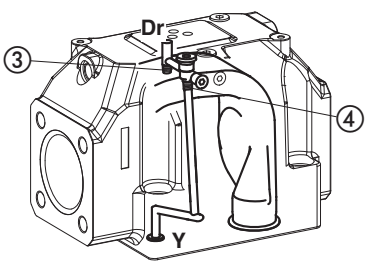

Internal piloting: Without plug ①;
External piloting: Add NPTF 1/8 in pos ①;
plug NPTF 1/8 in pos ②;
Internal drain: Without plug NPTF 1/8 in pos ③;
Add plug NPTF 1/8 in pos ④;
External drain: Add plug NPTF 1/8 in pos ③.

DPZO-LEB-*-1
DPZO-LES-*-1

ISO 4401: 2005
Mounting surface: 4401-05-05-0-05 (see table P005)

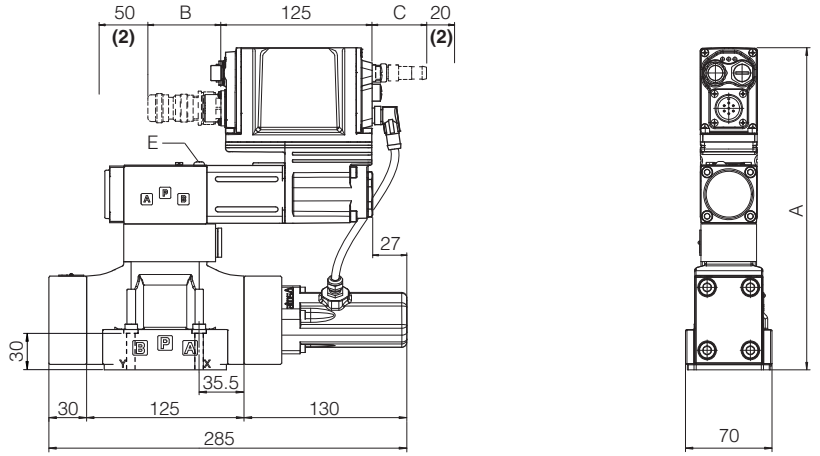

DPZO-*-1	A	B (1)	C (1)	E (air bleeding)	Mass [kg]
LEB - SN - IL	256	60	-	3	9,8
LEB - SN - NP	256	100	-		
LES - SN - NP, BC, BP, EH	256	100	58		
LES - SN - EW, EI, EP	271	100	58		
LES - SP, SF, SL - *	271	100	58		

(1) The indicated dimension refers to the longer connectors or Bluetooth adapter
For dimensions of connectors and Bluetooth adapter, see sections 22.6, 22.7 and 22.8
(2) Space required for connection cable and for connector removal

DPZO-LEB-*-2
DPZO-LES-*-2

ISO 4401: 2005
Mounting surface: 4401-07-07-0-05 (see table P005)

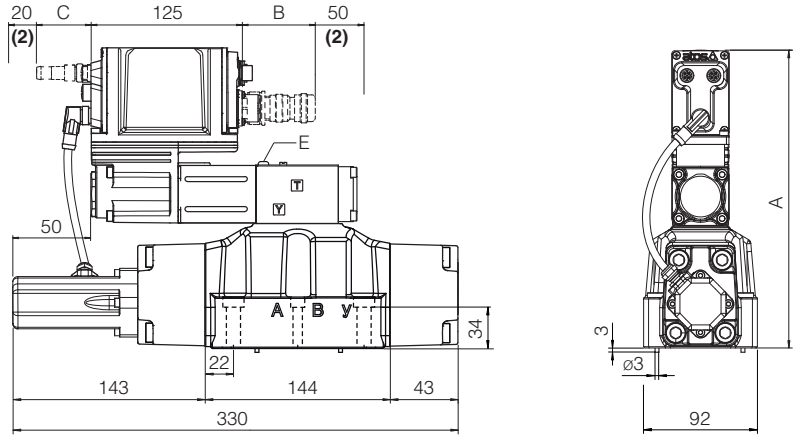

DPZO-*-2	A	B (1)	C (1)	E (air bleeding)	Mass [kg]
LEB - SN - IL	237	60	-	3	14,4
LEB - SN - NP	237	100	-		
LES - SN - NP, BC, BP, EH	237	100	58		
LES - SN - EW, EI, EP	252	100	58		
LES - SP, SF, SL - *	252	100	58		
Option /G	+30	-			+0,9

(1) The indicated dimension refers to the longer connectors or Bluetooth adapter
For dimensions of connectors and Bluetooth adapter, see sections 22.6, 22.7 and 22.8
(2) Space required for connection cable and for connector removal

Note: for /B option the proportional solenoid, the LVDT transducer and the on-board digital driver are at side of port B of the main stage

DPZO-LEB-*-4
DPZO-LES-*-4

ISO 4401: 2005
Mounting surface: 4401-08-08-0-05(see table P005)

DPZO-LEB-*-4M
DPZO-LES-*-4M

ISO 4401: 2005
Mounting surface: 4401-08-08-0-05(see table P005)
ports A, B, P, T Ø 32mm

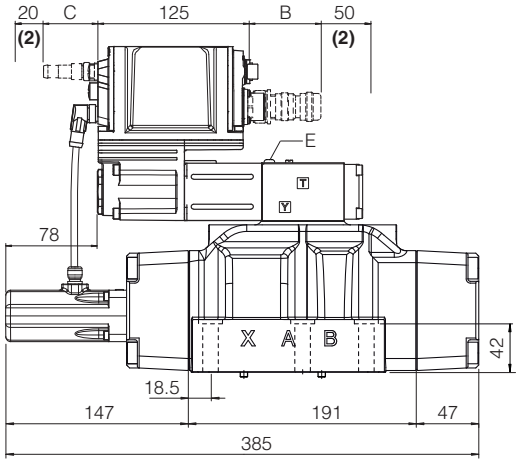

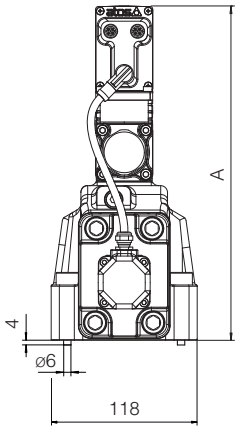

DPZO-*-4 and **DPZO-*-4M**	**A**	**B** (1)	**C** (1)	**E** (air bleeding)	**Mass [kg]**
LEB - SN - IL	266	60	-	3	19,4
LEB - SN - NP	266	100	-		
LES - SN - NP, BC, BP, EH	266	100	58		
LES - SN - EW, EI, EP	281	100	58		
LES - SP, SF, SL - *	281	100	58		
Option /G	+30	-			+0,9

(1) The indicated dimension refers to the longer connectors or Bluetooth adapter
For dimensions of connectors and Bluetooth adapter, see sections 22.6, 22.7 and 22.8
(2) Space required for connection cable and for connector removal

DPZO-LEB-*-6
DPZO-LES-*-6

ISO 4401: 2005
Mounting surface: 4401-10-09-0-05 (see table P005)

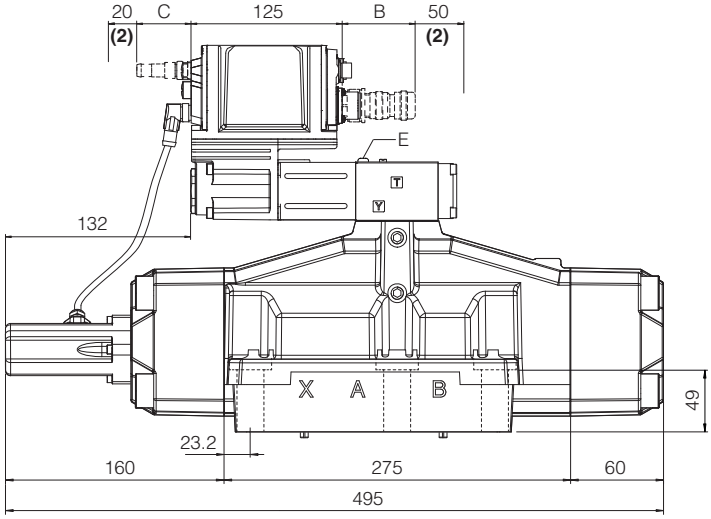

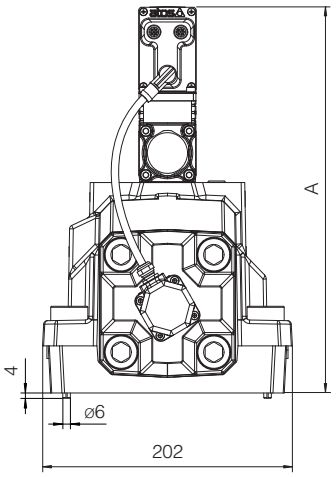

DPZO-*-6	**A**	**B** (1)	**C** (1)	**E** (air bleeding)	**Mass [kg]**
LEB - SN - IL	308	60	-	3	43,4
LEB - SN - NP	308	100	-		
LES - SN - NP, BC, BP, EH	323	100	58		
LES - SN - EW, EI, EP	323	100	58		
LES - SP, SF, SL - *	323	100	58		
Option /G	+40	-			+0,9

(1) The indicated dimension refers to the longer connectors or Bluetooth adapter
For dimensions of connectors and Bluetooth adapter, see sections 22.6, 22.7 and 22.8
(2) Space required for connection cable and for connector removal

Note: for /B option the proportional solenoid, the LVDT transducer and the on-board digital driver are at side of port B of the main stage

DPZO-LEB-*-8
DPZO-LES-*-8

ISO 4401: 2005
Mounting surface: 4401-10-09-0-05 (see table P005)

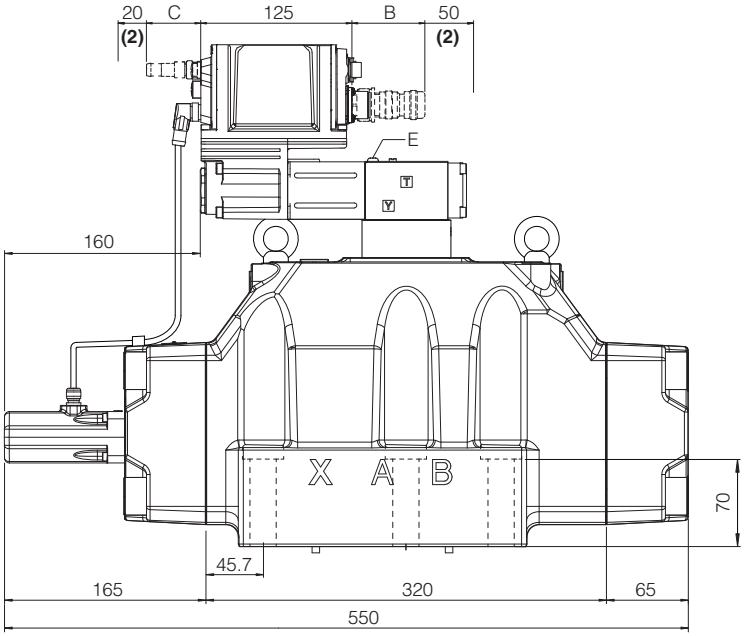

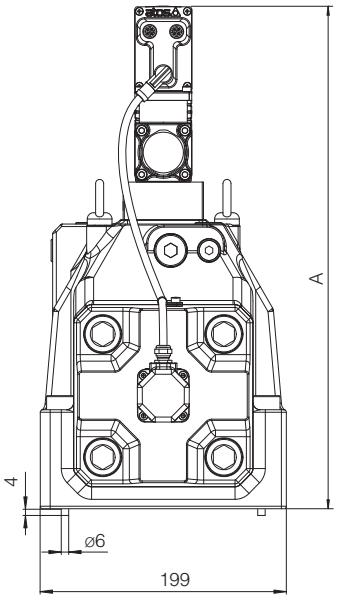

DPZO-*-8	A	B (1)	C (1)	E (air bleeding)	Mass [kg]
LEB - SN - IL	402	60	-	3	80,4
LEB - SN - NP	402	100	-		
LES - SN - NP, BC, BP, EH	402	100	58		
LES - SN - EW, EI, EP	417	100	58		
LES - SP, SF, SL - *	417	100	58		
Option /G	+40	-			+0,9

(1) The indicated dimension refers to the longer connectors or Bluetooth adapter
For dimensions of connectors and Bluetooth adapter, see sections 22.6, 22.7 and 22.8
(2) Space required for connection cable and for connector removal

Note: for /B option the proportional solenoid, the LVDT transducer and the on-board digital driver are at side of port B of the main stage

27 FASTENING BOLTS AND SEALS

Type	Size	Fastening bolts	Seals
DPZO	**1** = 10	4 socket head screws M6x40 class 12.9 Tightening torque = 15 Nm	5 OR 2050 Diameter of ports A, B, P, T: Ø 11 mm (max) 2 OR 108 Diameter of ports X, Y: Ø = 5 mm (max)
	2 = 16	4 socket head screws M10x50 class 12.9 Tightening torque = 70 Nm 2 socket head screws M6x45 class 12.9 Tightening torque = 15 Nm	4 OR 130 Diameter of ports A, B, P, T: Ø 20 mm (max) 2 OR 2043 Diameter of ports X, Y: Ø = 7 mm (max)
	4 = 25	6 socket head screws M12x60 class 12.9 Tightening torque = 125 Nm	4 OR 4112 Diameter of ports A, B, P, T: Ø 24 mm (max) 2 OR 3056 Diameter of ports X, Y: Ø = 7 mm (max)
	4M = 27	6 socket head screws M12x60 class 12.9 Tightening torque = 125 Nm	4 OR 3137 Diameter of ports A, B, P, T: Ø 32 mm (max) 2 OR 3056 Diameter of ports X, Y: Ø = 7 mm (max)
	6 = 32	6 socket head screws M20x80 class 12.9 Tightening torque = 600 Nm	4 OR 144 Diameter of ports A, B, P, T: Ø 34 mm (max) 2 OR 3056 Diameter of ports X, Y: Ø = 7 mm (max)
	8 = 35	6 socket head screws M20x100 class 12.9 Tightening torque = 600 Nm	4 OR 156 Diameter of ports A, B, P, T: Ø 50 mm (max) 2 OR 3056 Diameter of ports X, Y: Ø = 9 mm (max)

28 RELATED DOCUMENTATION

FS001	Basics for digital electrohydraulics
FS500	Digital proportional valves with p/Q control
FS630	Digital proportional valves with integral axis controller
FS900	Operating and maintenance information for proportional valves
FY100	Safety proportional valves - option /U
FY200	Safety proportional valves - option /K
GS500	Programming tools
GS510	Fieldbus
GS520	IO-Link interface
K800	Electric and electronic connectors
P005	Mounting surfaces for electrohydraulic valves
QB320	Quickstart for LEB valves commissioning
QF320	Quickstart for LES valves commissioning
Y010	Basics for safety components
E-MAN-RI-LEB	TEB/LEB user manual
E-MAN-RI-LES	TES/LES user manual
E-MAN-RI-LES-S	TES/LES with p/Q control user manual

Servoproportional directional valves

piloted, with two LVDT transducers and zero spool overlap

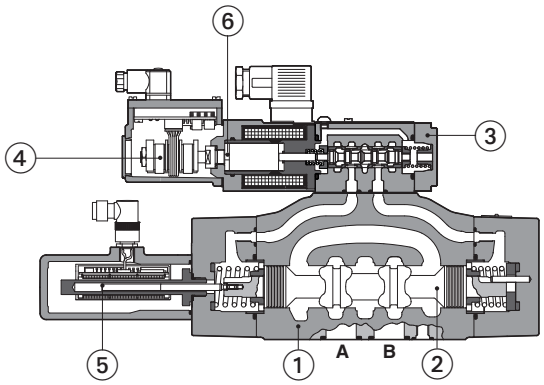

DPZO-L-270

① Valve body
② Main stage Spool
③ Pilot valve
④ Pilot valve LVDT transducer
⑤ Main stage LVDT transducer
⑥ Pilot valve solenoid

DPZO-L

Servoproportional directional valves, piloted, with two LVDT position transducer and zero spool overlap for position closed loop controls.

The valves operate in association with digital off-board divers or axis card, see section 2.

The two LVDT transducers (pilot and main stage) grant very high regulation accuracy and response sensitivity.

With de-energized proportional solenoids, full open position of the main stage spool is performed by configuration 60 or central position is performed by configuration 70, see section 10.

Spools regulation characteristics:
L = linear
DL = differential-linear, for control of actuators with area ratio 1:2
T = non linear, for fine low flow control

Size: **10** ÷ **32** - ISO 4401
Max flow: **180** ÷ **1600 l/min**
Max pressure: **350 bar**

1 MODEL CODE

DPZO - **L** - **2** **70** - **L** **5** / * * / *

Servoproportional directional valve, piloted

L = two LVDT transducers

Valve size ISO 4401:
1 = 10 **2** = 16 **4** = 25 **4M** = 27 **6** = 32

Configuration:

Standard | Option **/B**

60 =

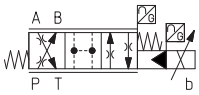

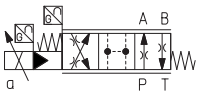

70 =

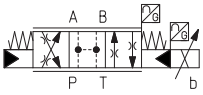

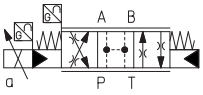

Spool type, regulating characteristics:

L = linear

DL = differential-linear
P-A = Q, B-T = Q/2
P-B = Q/2, A-T = Q

T = non linear **(2)**

Hydraulic options (1):
B = solenoid and LVDT transducer at side of port B of the main stage (side A of pilot valve)
D = internal drain
E = external pilot pressure
G = pressure reducing valve for piloting

Series number

Seals material,
see section 6 :
- = NBR
PE = FKM
BT = NBR low temperature

Spool size:	**3** (L)	**5** (L,DL)	**5** (L)	**5** (T)
DPZO-1 =	-	100	-	-
DPZO-2 =	160	250	-	190
DPZO-4 =	-	480	-	-
DPZO-4M =	-	550	-	-
DPZO-6 =	-	-	640	-

Nominal flow (l/min) at Δp 10bar P-T

(1) All combination possible
(2) Only for DPZO-L-270

2 OFF-BOARD ELECTRONIC DRIVERS

Please include in the driver order also the complete code of the connected proportional valve.

Drivers model	E-BM-LEB	E-BM-LES	Z-BM-LEZ
Type	Digital	Digital	Digital
Format	DIN-rail panel	DIN-rail panel	DIN-rail panel
Tech table	GS230	GS240	GS330

3 GENERAL CHARACTERISTICS

Assembly position	Any position
Subplate surface finishing to ISO 4401	Acceptable roughness index: Ra ≤ 0,8, recommended Ra 0,4 – Flatness ratio 0,01/100
MTTFd valves according to EN ISO 13849	75 years, for futher details see technical table P007
Ambient temperature range	**Standard** = -20°C ÷ +60°C **/PE** option = -20°C ÷ +60°C **/BT** option = -40°C ÷ +60°C
Storage temperature range	**Standard** = -20°C ÷ +70°C **/PE** option = -20°C ÷ +70°C **/BT** option = -40°C ÷ +70°C
Surface protection	Zinc coating with black passivation
Corrosion resistance	Salt spray test (EN ISO 9227) > 200 h
Vibration resistance	See technical table G004
Compliance	CE according to EMC directive 2014/30/EU (Immunity: EN 61000-6-2; Emission: EN 61000-6-3) RoHS Directive 2011/65/EU as last update by 2015/863/EU REACH Regulation (EC) n°1907/2006

4 HYDRAULIC CHARACTERISTICS - based on mineral oil ISO VG 46 at 50 °C

Valve model	DPZO-L-1	DPZO-L-2			DPZO-L-4	DPZO-L-4M	DPZO-L-6
Pressure limits [bar]	ports **P, A, B, X** = 350; **T** = 250 (10 for option /D); **Y** = 10;						
Spool type	**L5, DL5**	**L3**	**L5, DL5**	**T5**	**L5, DL5**		**L5**
Nominal flow Δp P-T [l/min] **(1)** Δp= 10 bar	100	160	250	190	480	550	640
Δp= 30 bar	160	270	430	330	830	950	1100
Max permissible flow [l/min]	180	400	550	550	1000	1100	1600
Piloting pressure [bar]	min. = 25; max = 350 (option /G advisable for pilot pressure > 150 bar)						
Piloting volume [cm³/min]	1,4	3,7			9	11,3	21,6
Piloting flow **(2)** [l/min]	3,5	9			18	20	19
Leakage **(3)** Pilot [cm³/min]	100 / 300	150 / 450			200 / 600	200 / 600	900 / 2800
Main stage [l/min]	0,4 / 1,2	0,6 / 2,5			1,0 / 4,0	1,0 / 4,0	3,0 / 9,0
Response time **(4)** [ms]	≤ 25	≤ 25			≤ 30	≤ 35	≤ 80
Hysteresis	≤ 0,1 [%of max regulation]						
Repeatability	± 0,1 [%of max regulation]						
Thermal drift	zero point displacement < 1% at ΔT = 40°C						

(1) For different Δp, the max flow is in accordance to the diagrams in section 7.2
(2) With step reference input signal 0 ÷100 %
(3) At p = 100/350 bar
(4) 0-100% step signal, see detailed diagrams in section 7.3

5 ELECTRICAL CHARACTERISTICS

Max power consumption	30 W
Max. solenoid current	2,6 A
Coil resistance R at 20°C	3 ÷ 3,3 Ω
Insulation class	H (180°) Due to the occuring surface temperatures of the solenoid coils, the European standards ISO 13732-1 and EN982 must be taken into account
Protection degree to DIN EN60529	IP65 with mating connectors
Duty factor	Continuous rating (ED=100%)

6 SEALS AND HYDRAULIC FLUIDS - for other fluids not included in below table, consult our technical office

Seals, recommended fluid temperature	NBR seals (standard) = -20°C ÷ +60°C, with HFC hydraulic fluids = -20°C ÷ +50°C FKM seals (/PE option) = -20°C ÷ +80°C HNBR seals (/BT option) = -40°C ÷ +60°C, with HFC hydraulic fluids = -20°C ÷ +50°C		
Recommended viscosity	20÷100 mm²/s - max allowed range 15 ÷ 380 mm²/s		
Max fluid contamination level normal operation	ISO4406 class 18/16/13 NAS1638 class 7		see also filter section at www.atos.com or KTF catalog
longer life	ISO4406 class 16/14/11 NAS1638 class 5		
Hydraulic fluid	**Suitable seals type**	**Classification**	**Ref. Standard**
Mineral oils	NBR, FKM, NBR low temp.	HL, HLP, HLPD, HVLP, HVLPD	DIN 51524
Flame resistant without water	FKM	HFDU, HFDR	ISO 12922
Flame resistant with water	NBR, NBR low temp.	HFC	

7 DIAGRAMS (based on mineral oil ISO VG 46 at 50 °C)

7.1 Regulation diagrams (values measure at Δp 10 bar P-T)

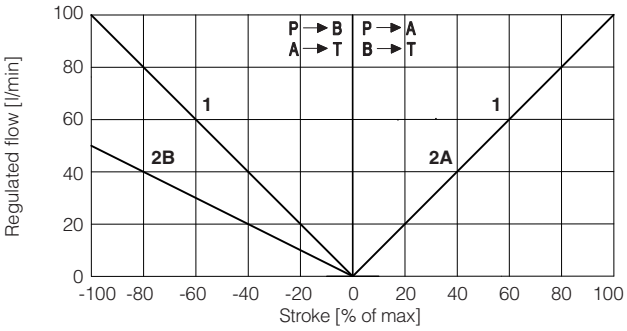

DPZO-1: **1** = L5 **2A** = DL5 (P → A, A → T)
2B = DL5 (P → B, B → T)

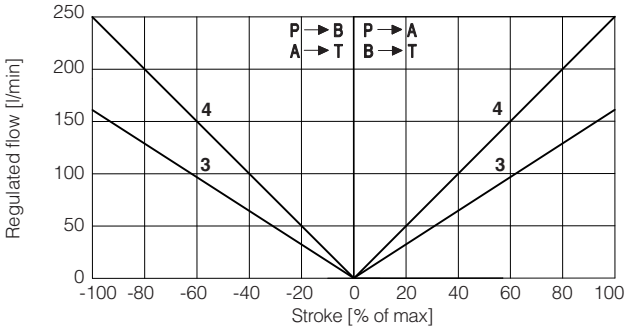

DPZO-2: **3** = L3 **4** = L5

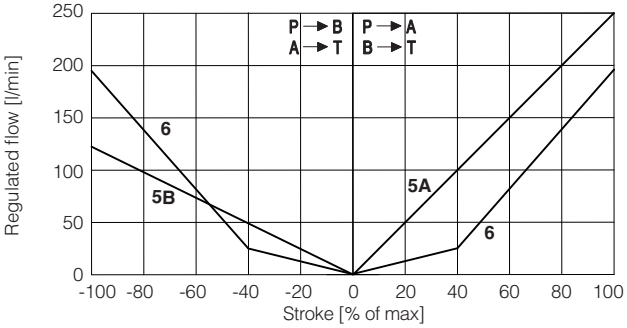

DPZO-2: **5A** = DL5 (P → A, A → T) **6** = T5
5B = DL5 (P → B, B → T)

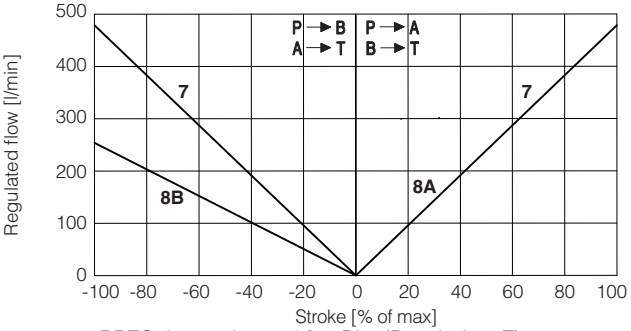

DPZO-4: **7** = L5 **8A** = DL5 (P → A, A → T)
8B = DL5 (P → B, B → T)

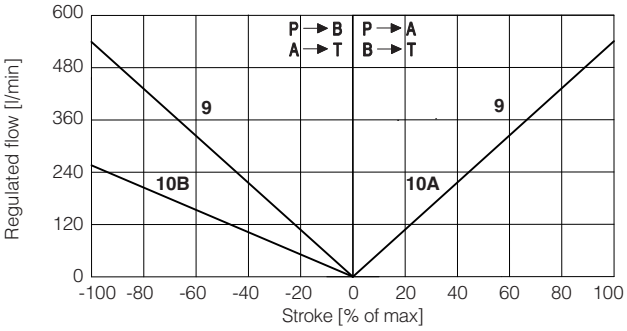

DPZO-4M: **9** = L5 **10A** = DL5 (P → A, A → T)
10B = DL5 (P → B, B → T)

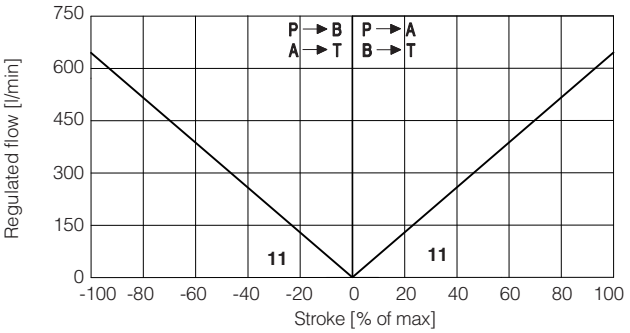

DPZO-6: **11** = L5

7.2 Flow /Δp diagram - stated at 100% of spool stroke

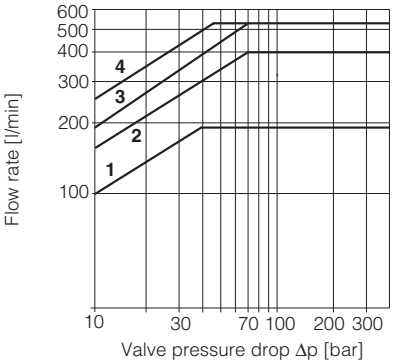

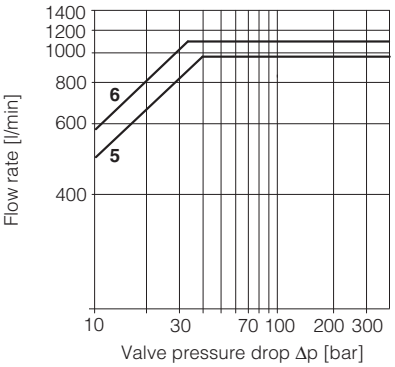

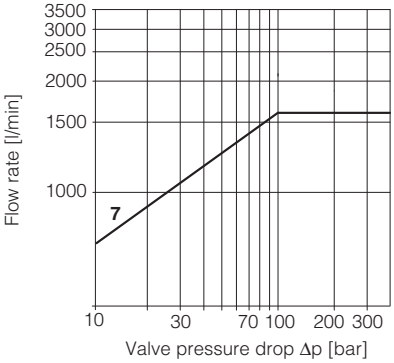

DPZO-1:
1 = spools L5, DL5

DPZO-2:
2 = spools L3
3 = spool T5
4 = spools L5, DL5

DPZO-4:
5 = spools L5, DL5

DPZO-4M:
6 = spools L5, DL5

DPZO-6:
7 = L5

Note: Hydraulic configuration vs. reference signal for configurations 60 and 70 (standard and option /B)

Reference signal $\left.\begin{matrix}0 \div +10\ V \\ 12 \div 20\ mA\end{matrix}\right\}$ P → A / B → T

Reference signal $\left.\begin{matrix}0 \div -10\ V \\ 4 \div 12\ mA\end{matrix}\right\}$ P → B / A → T

7.3 Response time

The response times in below diagrams are measured at different steps of the reference input signal. They have to be considered as average values. For the valves with digital electronics the dynamics performances can be optimized by setting the internal software parameters.

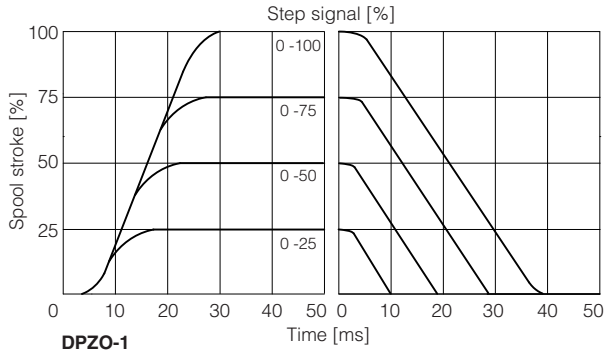

DPZO-1
DPZO-2

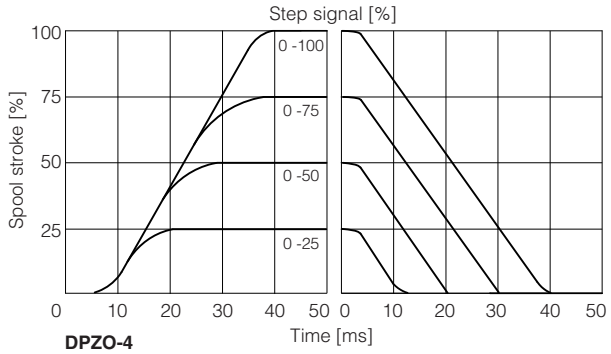

DPZO-4
DPZO-4M

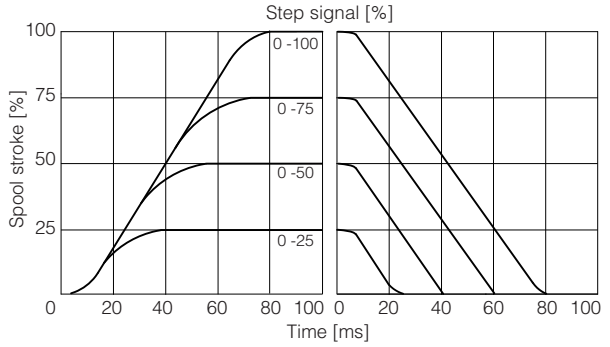

DPZO-6

7.4 Bode diagrams

Stated at nominal hydraulic conditions.

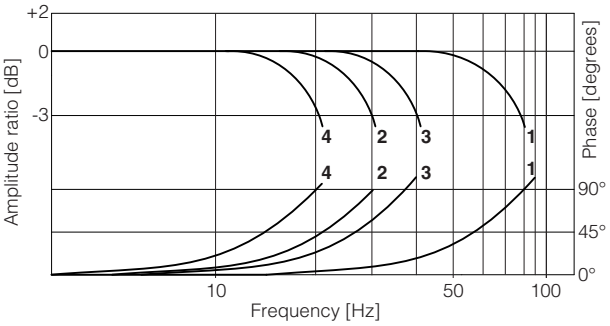

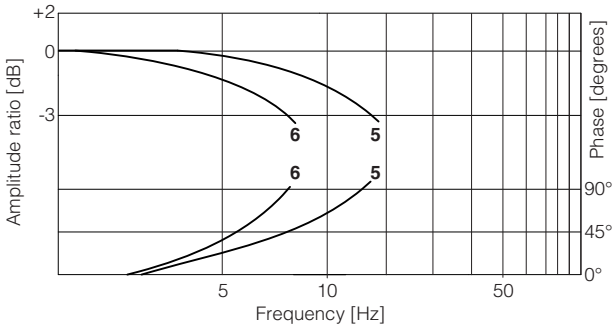

1 = DPZO-1, DPZO-2 } ± 5% **2** = DPZO-1, DPZO-2 } ± 100%

3 = DPZO-4, DPZO-4M } ± 5% **4** = DPZO-4, DPZO-4M } ± 100%

5 = DPZO-6 ± 5% **6** = DPZO-6 ± 100%

7.5 Pressure gain

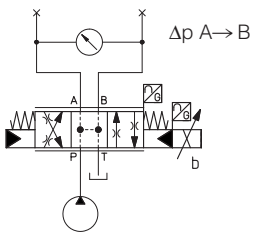

7 = DPZO-1

8 = DPZO-2
DPZO-4
DPZO-4M
DPZO-6

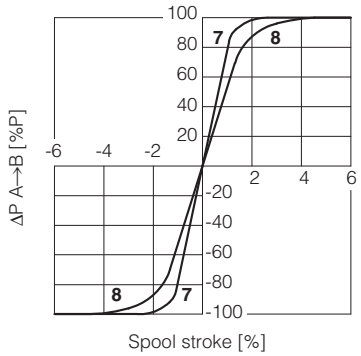

8 HYDRAULIC OPTIONS

B = Solenoid and LVDT transducer at side of port B of the main stage (side A of pilot valve). For hydraulic configuration vs reference signal, see 7.1

D = Internal drain (through port T).
Pilot and drain configuration can be modified as shown in the functional scheme here aside. For detailed view of plugs position, see section 12
The valve's standard configuration provides internal pilot and external drain.

E = External pilot (through port X).
Pilot and drain configuration can be modified as shown in the functional scheme here aside. For detailed view of plugs position, see section 12
The valve's standard configuration provides internal pilot and external drain.

G = Pressure reducing valve ③ with fixed setting, installed between pilot valve and main body. Reduced pressure setting:

DPZO-1, DPZO-2, DPZO-4(M) and DPZO-6 = **40 bar**

It is advisable for valves with internal pilot in case of system pressure higher than 150 bar.
Pressure reducing valve ③ is standard for DPZO-1, for other sizes add /G option.

Functional Scheme - example of configuration 70

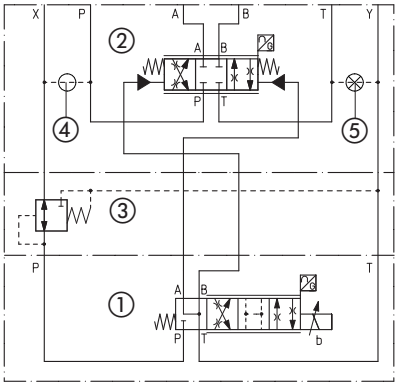

① Pilot valve ② Main stage
③ Pressure reducing valve
④ Plug to be added for external pilot trough port X
⑤ Plug to be removed for internal drain through port T

9 ELECTRICAL CONNECTION - connectors supplied with the valve

9.1 Pilot valve solenoid connector

PIN	SIGNAL	TECHNICAL SPECIFICATION	Connector code 666
1	**COIL**	Power supply	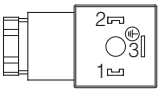
2	**COIL**	Power supply	
3	**GND**	Ground	

9.2 LVDT pilot transducer connector

PIN	SIGNAL	TECHNICAL SPECIFICATION	Connector code 345
1	**TR**	Output signal	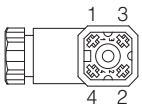
2	**VT-**	Power supply -15VDC	
3	**VT+**	Power supply +15VDC	
4	**GND**	Ground	

9.3 LVDT main stage transducer connector

PIN	SIGNAL	TECHNICAL SPECIFICATION	Connector code ZBE-08
1	**PROG**	Do not connect	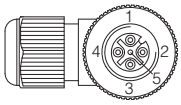
2	**VT+**	Power supply +15VDC	
3	**AGND**	Ground	
4	**TR**	Output signal	
5	**VT-**	Power supply -15VDC	

10 SAFETY REST POSITION - configuration 70

In absence of power supply to the solenoids, the valve main spool is moved by the springs force to the **safety rest position** characterized by a small offset of about 1% to 6% of the total stroke in P-B / A-T configuration. This is specifically designed to avoid that in case of accidental interruption of power supply to the valve solenoids, the actuator moves towards an undefined direction (due to the tolerances of the zero overlap spool), with potential risk of damages or personnel injury.
Thanks to the **safety rest position** the actuator movement is suddenly stopped and it is recovered at very low speed towards the direction corresponding to the P-B/ A-T connection.

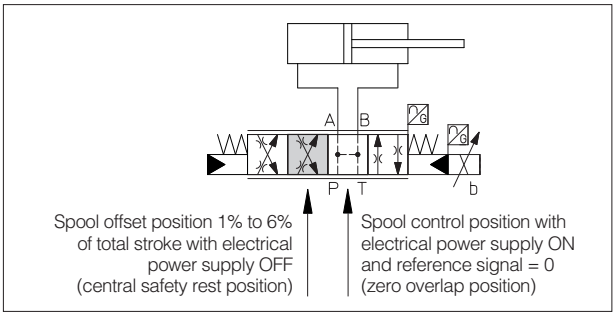

11 FASTENING BOLTS AND SEALS

Type	Size	Fastening bolts	Seals
DPZO	**1** = 10	4 socket head screws M6x40 class 12.9 Tightening torque = 15 Nm	5 OR 2050; Diameter of ports A, B, P, T: Ø 11 mm (max) 2 OR 108 Diameter of ports X, Y: Ø = 5 mm (max)
	2 = 16	4 socket head screws M10x50 class 12.9 Tightening torque = 70 Nm 2 socket head screws M6x45 class 12.9 Tightening torque = 15 Nm	4 OR 130; Diameter of ports A, B, P, T: Ø 20 mm (max) 2 OR 2043 Diameter of ports X, Y: Ø = 7 mm (max)
	4 = 25	6 socket head screws M12x60 class 12.9 Tightening torque = 125 Nm	4 OR 4112; Diameter of ports A, B, P, T: Ø 24 mm (max) 2 OR 3056 Diameter of ports X, Y: Ø = 7 mm (max)
	4M = 27	6 socket head screws M12x60 class 12.9 Tightening torque = 125 Nm	4 OR 3137; Diameter of ports A, B, P, T: Ø 32 mm (max) 2 OR 3056 Diameter of ports X, Y: Ø = 7 mm (max)
	6 = 32	6 socket head screws M20x80 class 12.9 Tightening torque = 600 Nm	4 OR 144; Diameter of ports A, B, P, T: Ø 34 mm (max) 2 OR 3056 Diameter of ports X, Y: Ø = 7 mm (max)

12 PLUGS LOCATION FOR PILOT/DRAIN CHANNELS

Depending on the position of internal plugs, different pilot/drain configurations can be obtained as shown below.
To modify the pilot/drain configuration, proper plugs must only be interchanged. The plugs have to be sealed using loctite 270.
Standard valves configuration provides internal pilot and external drain.

DPZO-1 **Pilot channels** **Drain channels**

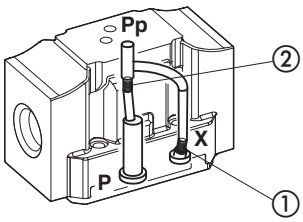

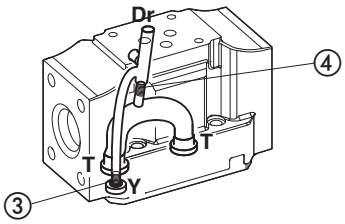

Internal piloting: blinded plug SP-X300F ① in X;
External piloting: blinded plug SP-X300F ② in Pp;
Internal drain: blinded plug SP-X300F ③ in Y;
External drain: blinded plug SP-X300F ④ in Dr.

DPZO-2 **Pilot channels** **Drain channels**

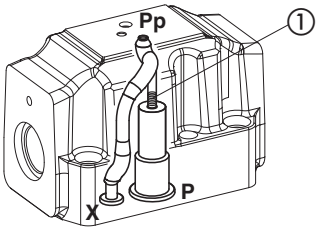

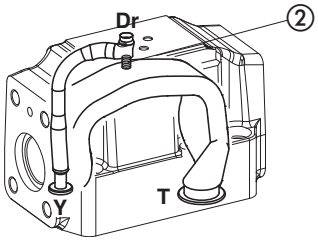

Internal piloting: Without blinded plug SP-X300F ①;
External piloting: Add blinded plug SP-X300F ①;
Internal drain: Without blinded plug SP-X300F ②;
External drain: Add blinded plug SP-X300F ②.

DPZO-4 **Pilot channels** **Drain channels**

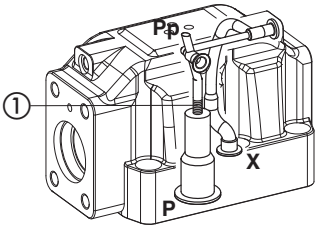

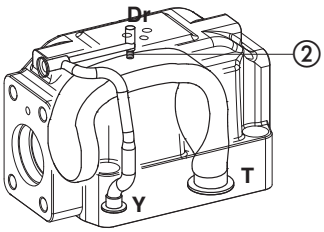

Internal piloting: Without blinded plug SP-X500F ①;
External piloting: Add blinded plug SP-X500F ①;
Internal drain: Without blinded plug SP-X300F ②;
External drain: Add blinded plug SP-X300F ②.

DPZO-6 **Pilot channels** **Drain channels**

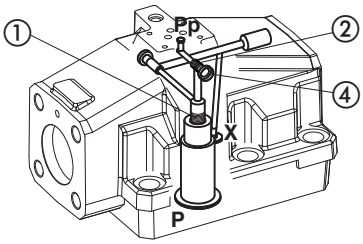

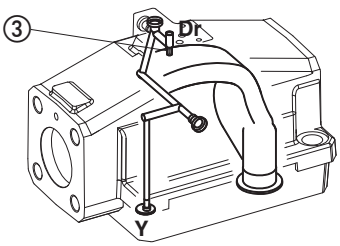

Internal piloting: Without plug ①;
External piloting: Add DIN-908 M16x1,5 in pos ①;
Internal drain: Without blinded plug SP-X300F ③;
External drain: Add blinded plug SP-X300F ③.

DPZO-L-1

ISO 4401: 2005
Mounting surface: 4401-05-05-0-05 (see table P005)

Mass [kg]	
DPZO-L-1	9

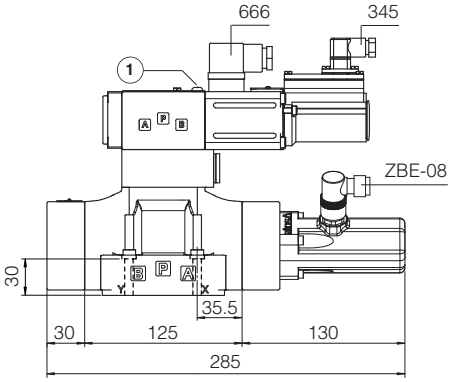

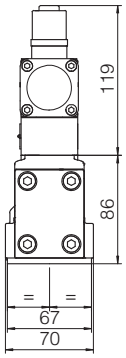

1 = Air bleeding 3

DPZO-L-2

ISO 4401: 2005
Mounting surface: 4401-07-07-0-05 (see table P005)

Mass [kg]	
DPZO-L-2	13,5

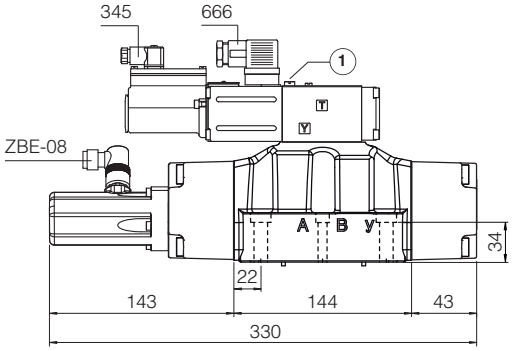

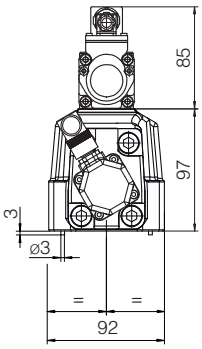

1 = Air bleeding 3

Notes: the overall height is increased by 30 mm for /G option (0,9 kg);
for option /B the proportional solenoid and the LVDT transducer are at side of port B of the main stage

DPZO-L-4

ISO 4401: 2005
Mounting surface: 4401-08-08-0-05(see table P005)

Mass [kg]	
DPZO-L-4*	17,5

DPZO-L-4M

ISO 4401: 2005
Mounting surface: 4401-08-08-0-05(see table P005)
ports A, B, P, T Ø 32mm

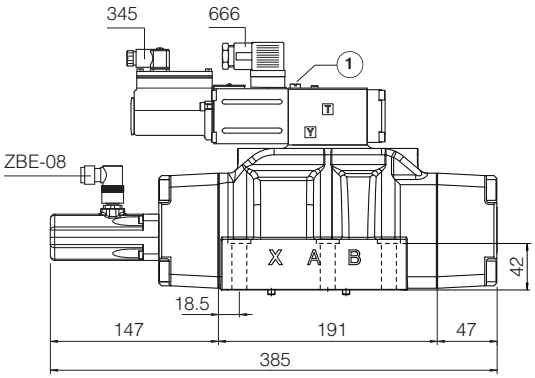

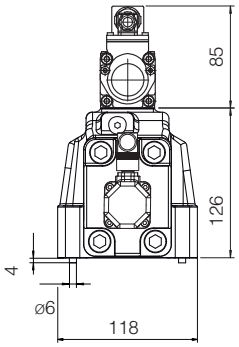

(1) = Air bleeding 3

DPZO-L-6

ISO 4401: 2005
Mounting surface: 4401-10-09-0-05 (see table P005)

Mass [kg]	
DPZO-L-6	42,5

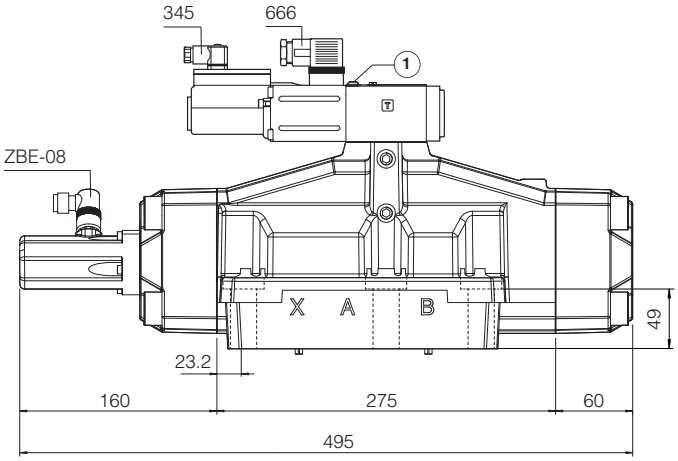

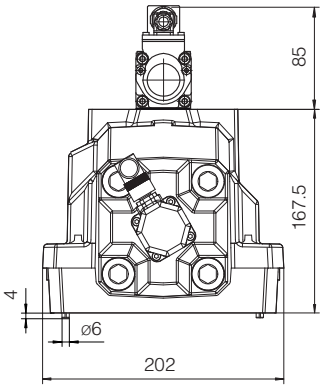

(1) = Air bleeding 3

Notes: the overall height is increased by 40 mm for /G option (0,9 kg);
for option /B the proportional solenoid and the LVDT transducer are at side of port B of the main stage

14 RELATED DOCUMENTATION

FS001	Basics for digital electrohydraulics	**GS500**	Programming tools
FS900	Operating and maintenance information for proportional valves	**GS510**	Fieldbus
GS230	E-BM-LEB digital driver	**K800**	Electric and electronic connectors
GS240	E-BM-LES digital driver	**P005**	Mounting surfaces for electrohydraulic valves
GS330	Z-BM-LEZ digital axis card		

Digital servoproportional 3-way cartridges

piloted, with on-board driver and two LVDT transducers

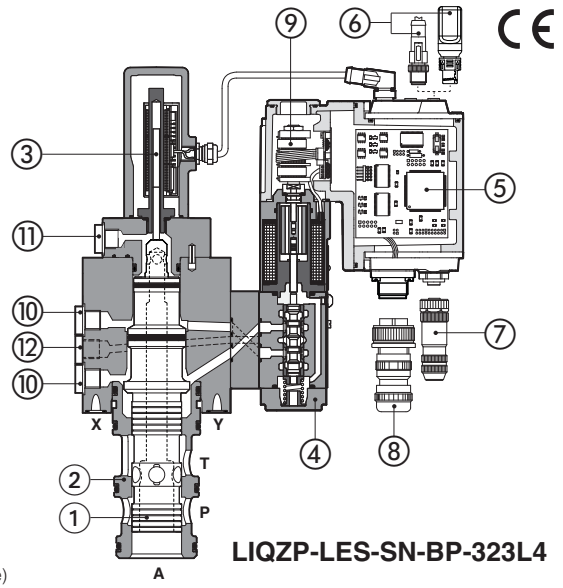

① Main spool
② Sleeve
③ Main stage LVDT transducer
④ Pilot valve
⑤ On-board digital driver
⑥ Bluetooth/USB connection
⑦ Fieldbus connectors
⑧ Main connector
⑨ Pilot valve LVDT transducer
⑩ Air bleeding
⑪ Air suction port
⑫ X1 port (external pilot pressure)

LIQZP-LES-SN-BP-323L4

LIQZP-LEB, LIQZP-LES

Digital servoproportional 3-way cartridges specifically designed for high speed closed loop controls. They are equipped with two LVDT position transducers for best dynamics in directional controls and not compensated flow regulations. The cartridge execution for blocks installation grants high flow capabilities and minimized pressure drops.

LEB basic execution with analog reference signal or IO-Link interface for digital reference signals, valve settings, and real-time diagnostics.

LES full execution which includes also optional alternated p/Q controls and fieldbus interfaces for digital reference signals, valve settings, and real-time diagnostics.

Bluetooth/USB connection is always present for valve settings via mobile App and Atos PC software.

Size: **25 ÷ 80**
Max flow: **500 ÷ 5000 l/min**
Max pressure: **420 bar**

1 MODEL CODE

LIQZP	-	LES	-	SN	-	NP	-	25	3	L4	/	*	/	*	*	/	*

Servoproportional 3-way cartridge, piloted

LEB = basic on-board digital driver
LES = full on-board digital driver

Alternated p/Q controls, see section 8 :
SN = none
Only for LES:
SP = pressure control (1 pressure transducer)
SL = force control (1 load cell)

IO-Link interface, only for LEB, see section 6 :
NP = Not present **IL** = IO-Link

Fieldbus interfaces, only for LES, see section 7 :
NP = Not present
BC = CANopen **EW** = POWERLINK
BP = PROFIBUS DP **EI** = EtherNet/IP
EH = EtherCAT **EP** = PROFINET RT/IRT

Valve size, see section 10 :

Size	**25**	**32**	**40**
l/min	185	330	420
Size	**50**	**63**	**80**
l/min	780	1250	2100

Nominal flow (l/min) at Δp 5 bar

Spool type, regulating characteristics, see section 13 :
L4 = linear

Hydraulic options (1):
A = reversal hydraulic configuration of main spool: P-A in rest position

Electronic options (1), not available for LEB-SN-IL:
C = current feedback for pressure transducer 4÷20mA (only for LES-SP, SL)
F = fault signal
I = current reference input and monitor 4÷20mA
Q = enable signal
Z = double power supply (only for LES), enable, fault and monitor signals - 12 pin connector

Bluetooth option (2), see section 4 :
T = Bluetooth adapter supplied with the valve

Series number

Seals material, see section 12 :
- = NBR
PE = FKM
BT = NBR low temperature

Configuration: 3 = 3 way

functional symbol: **Standard**

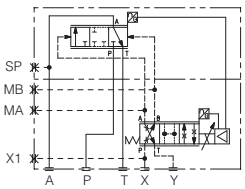

option **/A**

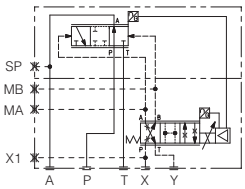

simplified symbol: **Standard**

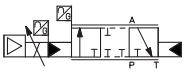

option **/A**

(1) For possible combined options, see section 16

2 GENERAL NOTES

Atos digital proportionals valves are CE marked according to the applicable directives (e.g. Immunity and Emission EMC Directive).
Installation, wirings and start-up procedures must be performed according to the general prescriptions shown in tech table **FS900** and in the user manuals included in the E-SW-SETUP programming software.

WARNING

To avoid overheating and possible damage of the electronic driver, the valves must be never energized without hydraulic supply to the pilot stage.
In case of prolonged pauses of the valve operation during the machine cycle, it is always advisable to disable the driver (option /Q or /Z).
A safety fuse 2,5 A installed on 24VDC power supply of each valve is always recommended, see also power supply note at sections 18 .

WARNING

The loss of the pilot pressure causes the undefined position of the main spool.
The sudden interruption of the power supply during the valve operation causes the immediate main spool opening A → T or P → A (for option /A).
This could cause pressure surges in the hydraulic system or high decelerations which may lead to machine damages.

3 VALVE SETTINGS AND PROGRAMMING TOOLS - see tech. table **GS500**

3.1 Atos CONNECT mobile App

Free downloadable App for smartphones and tablets which allows quick access to valve main functional parameters and basic diagnostic information via Bluetooth, thus avoiding physical cable connection and significantly reducing commissioning time.
Atos CONNECT supports Atos digital valve drivers equipped with E-A-BTH adapter or with built-in Bluetooth. It does not support valves with p/Q control or axis controls.

Download on the App Store

GET IT ON Google Play

3.2 E-SW-SETUP PC software

Free downloadable software for PC allows to set all valve functional parameters and to access complete diagnostic information of digital valve drivers via Bluetooth/USB service port.
Atos E-SW-SETUP PC software supports all Atos digital valve drivers and it is available at www.atos.com in MyAtos area.

WARNING: drivers USB port is not isolated! For E-C-SB-USB/M12 cable, the use of E-A-SB-USB/OPT isolator adapter is highly recommended for PC protection

Bluetooth or USB connection

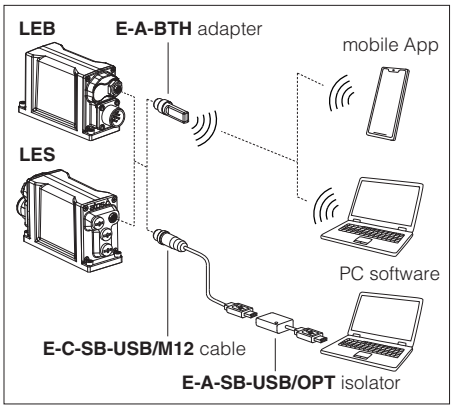

4 BLUETOOTH OPTION - see tech. table **GS500**

T option adds Bluetooth® connectivity to Atos valve drivers thanks to E-A-BTH adapter, which can be left permanently installed on-board, to allow the Bluetooth connection with the valve drivers at any time. E-A-BTH adapter can also be purchased separately and used to connect with any supported Atos digital product.
Bluetooth connection to the valve can be protected against unauthorised access by setting a personal password. The adapter leds visually indicates the status of valve driver and Bluetooth connection.

WARNING: for the list of countries where the Bluetooth adapter has been approved, see tech. table **GS500**
T option is not available for the Indian market, so the Bluetooth adapter must be ordered separately.

5 SMART TUNING

Smart tuning allows to adjust the cartridge dynamic response in order to match different performance requirements.

The cartridge is provided with 3 factory settings for the spool control:

- **dynamic** fast response time and high sensitivity for best dynamic performances. Default factory setting for cartridges
- **balanced** average response time and sensitivity suitable for major applications
- **smooth** attenuated response time and sensitivity to improve control stability in critical applications or in environments with electrical disturbances

Smart tuning setting can be switched from Dynamic (default) to Balanced or Smooth via software or fieldbus; if requested, performances can be further customized directly tuning each single control parameter. For details consult related manuals E-MAN-RI-* and Quickstart, see section 26.

For Response time and Bode diagrams see section 13.

6 IO-LINK - only for **LEB**, see tech. table **GS520**

IO-Link allows low cost digital communication between the valve and machine central unit. The valve is directly connected to a port of an IO-Link master (point-to-point connection) via low-cost unshielded cables for digital reference, diagnostic and settings. The IO-Link master works as a hub exchanging this information with the machine central unit via fieldbus.

7 FIELDBUS - only for **LES**, see tech. table **GS510**

Fieldbus allows valve direct communication with machine control unit for digital reference, valve diagnostics and settings. These execution allow to operate the valves through fieldbus or analog signals available on the main connector.

8 ALTERNATED p/Q CONTROLS - only for **LES**, see tech. table **FS500**

S* options add the closed loop control of pressure (**SP**) or force (**SL**) to the basic functions of proportional directional valves flow regulation.
A dedicated algorithm alternates pressure (force) depending on the actual hydraulic system conditions.
An additional connector is available for transducers to be interfaced to the valve's driver (1 pressure transducer for SP or 1 load cell for SL).
The alternated pressure control (SP) is possible only for specific installation conditions.
Main 12 pin connector is the same as /Z option plus two analog signals specific for the pressure (force) control.

9 GENERAL CHARACTERISTICS

Assembly position	Any position
Subplate surface finishing to ISO 4401	Acceptable roughness index: Ra ≤0,8, recommended Ra 0,4 – Flatness ratio 0,01/100
MTTFd valves according to EN ISO 13849	75 years, for further details see technical table P007
Ambient temperature range	**Standard** = -20°C ÷ +60°C **/PE** option = -20°C ÷ +60°C **/BT** option = -40°C ÷ +60°C
Storage temperature range	**Standard** = -20°C ÷ +70°C **/PE** option = -20°C ÷ +70°C **/BT** option = -40°C ÷ +70°C
Surface protection	Zinc coating with black passivation, galvanic treatment (driver housing)
Corrosion resistance	Salt spray test (EN ISO 9227) > 200 h
Vibration resistance	See technical table G004
Compliance	CE according to EMC directive 2014/30/EU (Immunity: EN 61000-6-2; Emission: EN 61000-6-3) RoHS Directive 2011/65/EU as last update by 2015/863/EU REACH Regulation (EC) n°1907/2006

10 HYDRAULIC CHARACTERISTICS - based on mineral oil ISO VG 46 at 50 °C

Size	**25**	**32**	**40**	**50**	**63**	**80**
Nominal flow Δp P-A or A-T [l/min]						
Δp = 5 bar	185	330	420	780	1250	2100
Δp = 10 bar	260	470	590	1100	1750	3000
Max permissible flow	500	850	1050	2000	3100	5000
Max pressure [bar]	Ports P, A, T = 420 X = 350 Y ≤ 10					
Nominal flow of pilot valve at Δp = 70 bar [l/min]	4	8	28	40	100	100
Leakage of pilot valve at P = 100 bar [l/min]	0,2	0,2	0,5	0,7	0,7	0,7
Piloting pressure [bar]	min: 40% of system pressure max 350 recommended 140 ÷ 160					
Piloting volume [cm^3]	2,16	7,2	8,9	17,7	33,8	42,7
Piloting flow **(1)** [l/min]	6,5	20	25	43	68	76
Response time 0 ÷ 100% step signal **(2)** [ms]	21	22	22	25	30	34
Hysteresis [% of the max regulation]	≤ 0,1					
Repeatability [% of the max regulation]	± 0,1					
Thermal drift	zero point displacement < 1% at ΔT = 40°C					

(1) With step reference input 0÷100% **(2)** With pilot pressure = 140 bar, see datailed diagrams in section 13.2

11 ELECTRICAL CHARACTERISTICS

Power supplies	Nominal : +24 VDC Rectified and filtered : VRMS = 20 ÷ 32 VMAX (ripple max 10 % VPP)				
Max power consumption	50 W				
Max. solenoid current	2,6 A				
Coil resistance R at 20°C	3 ÷ 3,3 Ω				
Analog input signals	Voltage: range ±10 VDC (24 VMAX tolerant) Input impedance: Ri > 50 kΩ Current: range ±20 mA Input impedance: Ri = 500 Ω				
Monitor outputs	Output range: voltage ±10 VDC @ max 5 mA current ±20 mA @ max 500 Ω load resistance				
Enable input	Range: 0 ÷ 5 VDC (OFF state), 9 ÷ 24 VDC (ON state), 5 ÷ 9 VDC (not accepted); Input impedance: Ri > 10 kΩ				
Fault output	Output range: 0 ÷ 24 VDC (ON state > [power supply - 2 V] ; OFF state < 1 V) @ max 50 mA; external negative voltage not allowed (e.g. due to inductive loads)				
Pressure/Force transducer power supply (only for SP, SL)	+24VDC @ max 100 mA (E-ATR-8 see tech table **GS465**)				
Alarms	Solenoid not connected/short circuit, cable break with current reference signal, over/under temperature, valve spool transducer malfunctions, alarms history storage function				
Insulation class	H (180°) Due to the occurring surface temperatures of the solenoid coils, the European standards ISO 13732-1 and EN982 must be taken into account				
Protection degree to DIN EN60529	IP66 / IP67 with mating connectors				
Duty factor	Continuous rating (ED=100%)				
Tropicalization	Tropical coating on electronics PCB				
Additional characteristics	Short circuit protection of solenoid's current supply; 3 leds for diagnostic (only for LES); spool position control (SN) or pressure/force control (SP, SL) by P.I.D. with rapid solenoid switching; protection against reverse polarity of power supply				
Communication interface	USB Atos ASCII coding	IO-Link Interface and System Specification 1.1.3	CANopen EN50325-4 + DS408	PROFIBUS DP EN50170-2/IEC61158	EtherCAT POWERLINK EtherNet/IP PROFINET IO RT/IRT IEC 61158
Communication physical layer	not insulated USB 2.0+USB OTG	SDCI class port B	optical insulated CAN ISO11898	optical insulated RS485	Fast Ethernet, insulated 100 Base TX
Recommended wiring cable	LiYCY shielded cables, see section 22				

Note: a maximum time of 800 ms (depending on communication type) has to be considered between the driver energizing with the 24 VDC power supply and when the valve is ready to operate. During this time the current to the valve coils is switched to zero.

12 SEALS AND HYDRAULIC FLUIDS - for other fluids not included in below table, consult our technical office

Seals, recommended fluid temperature		NBR seals (standard) = -20°C ÷ +60°C, with HFC hydraulic fluids = -20°C ÷ +50°C FKM seals (/PE option) = -20°C ÷ +80°C NBR low temp. seals (/BT option) = -40°C ÷ +60°C, with HFC hydraulic fluids = -20°C ÷ +50°C		
Recommended viscosity		20÷100 mm²/s - max allowed range 15 ÷ 380 mm²/s		
Max fluid contamination level	normal operation	ISO4406 class 18/16/13 NAS1638 class 7		see also filter section at www.atos.com or KTF catalog
	longer life	ISO4406 class 16/14/11 NAS1638 class 5		
Hydraulic fluid		**Suitable seals type**	**Classification**	**Ref. Standard**
Mineral oils		NBR, FKM, NBR low temp.	HL, HLP, HLPD, HVLP, HVLPD	DIN 51524
Flame resistant without water		FKM	HFDU, HFDR	ISO 12922
Flame resistant with water		NBR, NBR low temp.	HFC	

13 DIAGRAMS (based on mineral oil ISO VG 46 at 50 °C)

13.1 Regulation diagrams, see note

1 = LIQZP

Hydraulic configuration vs. reference signal:

		standard	option /A
Reference signal	0 ÷+10 V 12÷20 mA	P → A	A → T
Reference signal	0 ÷-10 V 4÷12 mA	A → T	P → A

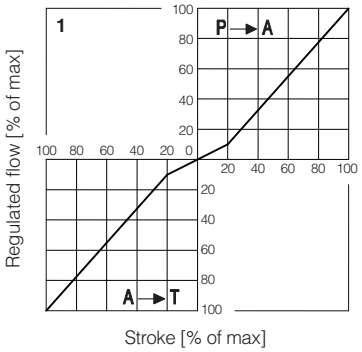

13.2 Pressure gain diagram

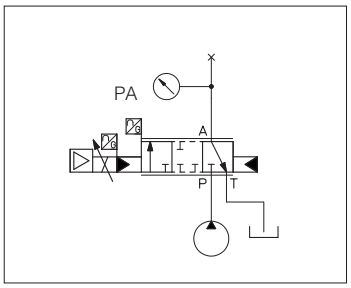

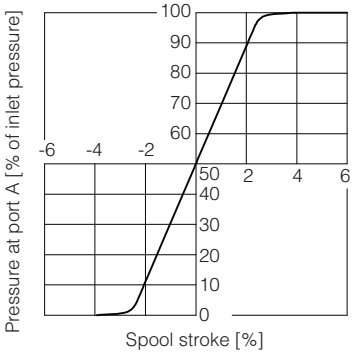

13.3 Response time

The response times in below diagrams are measured at different steps of the reference input signal. They have to be considered as average values.

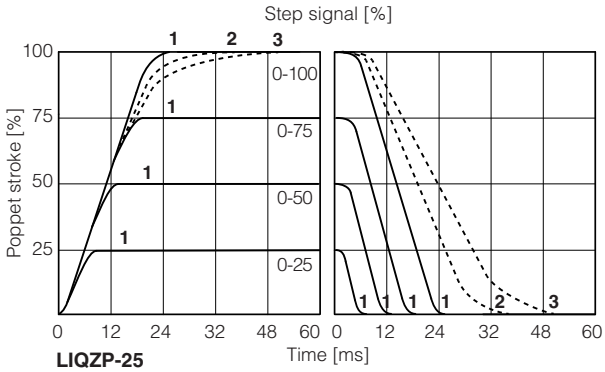

LIQZP-25
LIQZP-32
LIQZP-40

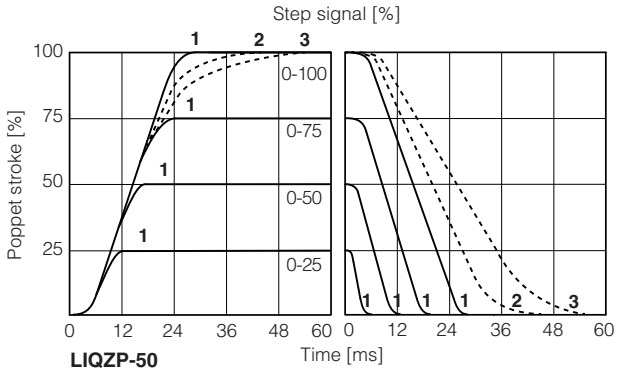

LIQZP-50

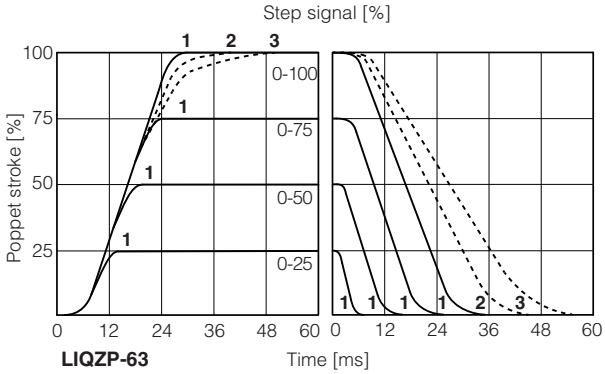

LIQZP-63

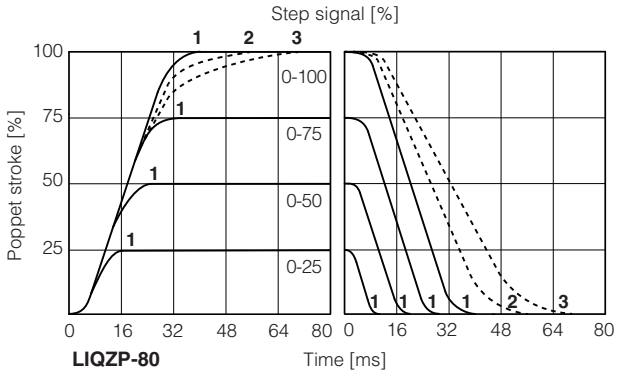

LIQZP-80

1 = dynamic **2** = balanced (*) **3** = smooth (*)

(*) Response time is represented only for 0-100% step; for intermediate steps, the response time increment of presets 2 (balanced) and 3 (smooth) with respect to the preset 1 (dynamic) is proportional to the step amplitude of the reference input signal

13.4 Bode diagrams LIQZP-L*-253L4

Stated at nominal hydraulic conditions

± 5% nominal stroke:
1 = dynamic
2 = balanced
3 = smooth

± 100% nominal stroke:
4 = dynamic
5 = balanced
6 = smooth

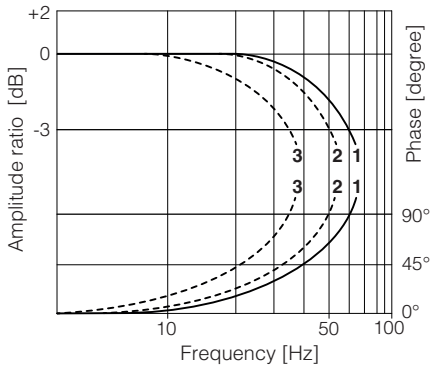

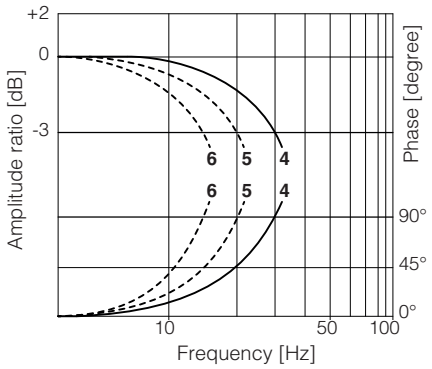

13.5 Bode diagrams LIQZP-L*-323L4

Stated at nominal hydraulic conditions

± 5% nominal stroke:
1 = dynamic
2 = balanced
3 = smooth

± 100% nominal stroke:
4 = dynamic
5 = balanced
6 = smooth

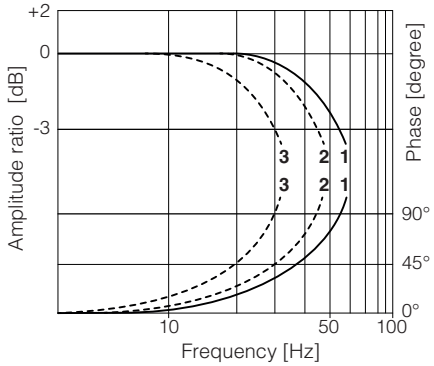

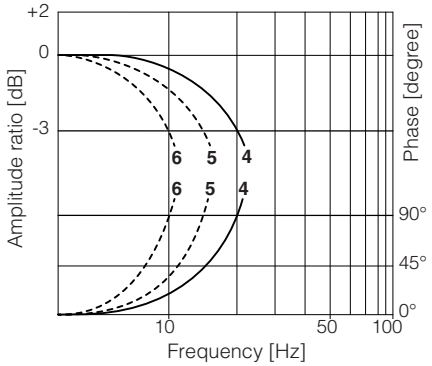

13.6 Bode diagrams LIQZP-L*-403L4

Stated at nominal hydraulic conditions

± 5% nominal stroke:
1 = dynamic
2 = balanced
3 = smooth

± 100% nominal stroke:
4 = dynamic
5 = balanced
6 = smooth

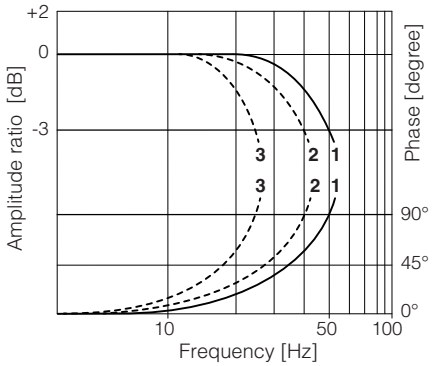

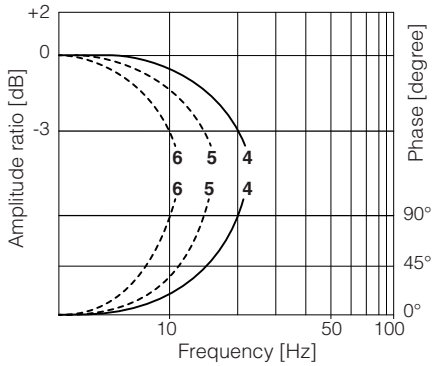

13.7 Bode diagrams LIQZP-L*-503L4

Stated at nominal hydraulic conditions

± 5% nominal stroke:
1 = dynamic
2 = balanced
3 = smooth

± 100% nominal stroke:
4 = dynamic
5 = balanced
6 = smooth

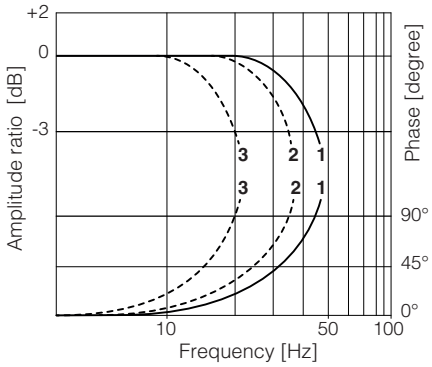

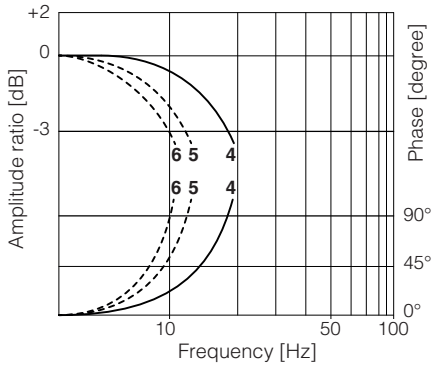

13.8 Bode diagrams LIQZP-L*-633L4

Stated at nominal hydraulic conditions

± 5% nominal stroke:
1 = dynamic
2 = balanced
3 = smooth

± 100% nominal stroke:
4 = dynamic
5 = balanced
6 = smooth

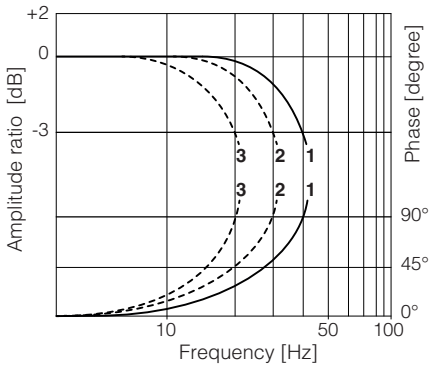

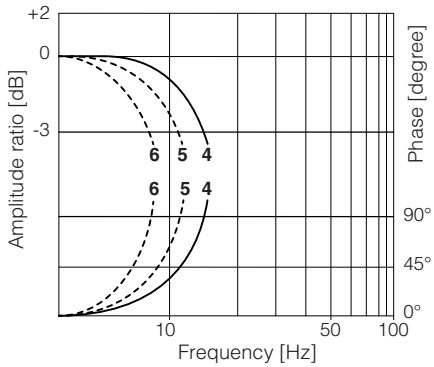

13.9 Bode diagrams LIQZP-L*-803L4

Stated at nominal hydraulic conditions

± 5% nominal stroke:
1 = dynamic
2 = balanced
3 = smooth

± 100% nominal stroke:
4 = dynamic
5 = balanced
6 = smooth

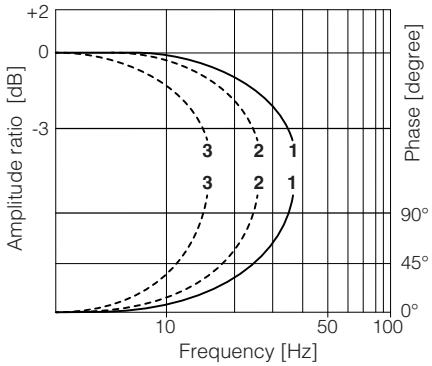

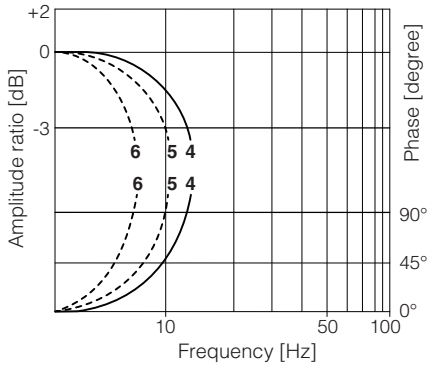

14 HYDRAULIC OPTIONS

A = The standard valve version provides the hydraulic configuration A-T of main spool in absence of electric power supply to the valve.
The option /A provides the reverse configuration P-A of main spool in absence of electric power supply to the valve.
This execution is particularly requested in vertical presses for safety reasons, because in case of electric power breakdown the P-A configuration of the main spool prevents the uncontrolled and dangerous downstroke of the press ram.

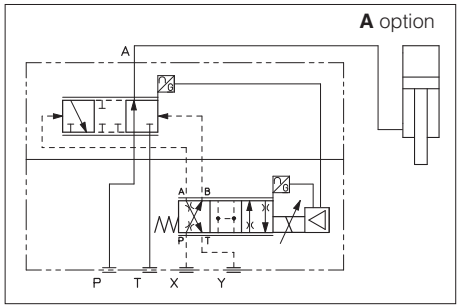

15 ELECTRONIC OPTIONS - not available for LEB-SN-IL

F = This option permits to monitor the eventual fault condition of the driver, as for example the solenoid short circuit/not connected, reference signal cable broken for option /I, spool position transducer broken, etc. - see 18.9 for signal specifications.

I = This option provides 4 ÷ 20 mA current reference and monitor signals, instead of the standard ±10 VDC.
Input signal can be reconfigured via software selecting between voltage and current, within a maximum range of ±10 VDC or ±20 mA.
It is normally used in case of long distance between the machine control unit and the valve or where the reference signal can be affected by electrical noise; the valve functioning is disabled in case of reference signal cable breakage.

Q = This option permits to inhibit the valve function without removing the power supply to the driver. Upon disable command the current to the solenoid is zeroed and the valve's spool moves to rest position.
The option /Q is suggested for all cases where the valve has to be frequently inhibited during the machine cycle – see 18.7 for signal specifications.

Z = This option provides, on the 12 pin main connector, the following additional features:
Fault output signal - see above option **/F**
Enable input signal - see above option **/Q**
Repeat enable output signal - only for **LEB-SN-NP** (see 18.8)
Power supply for driver's logics and communication - only for **LES** (see 18.9)

C = This option is available to connect pressure (force) transducers with 4 ÷ 20 mA current output signal, instead of the standard 0 ÷ 10 VDC.
Input signal can be reconfigured via software selecting between voltage and current, within a maximum range of ±10 VDC or ±20 mA.

16 POSSIBLE COMBINED OPTIONS

LEB-SN-NP, **LES-SN**
/AF, /AI, /AQ, /AZ, /FI, /IQ, /IZ, /AFI, /AIQ, /AIZ

LES-SP, SL
/AC, /CI, /ACI

Note: **/T** Bluetooth adapter option can be combined with all other options

17 AIR BLEEDING

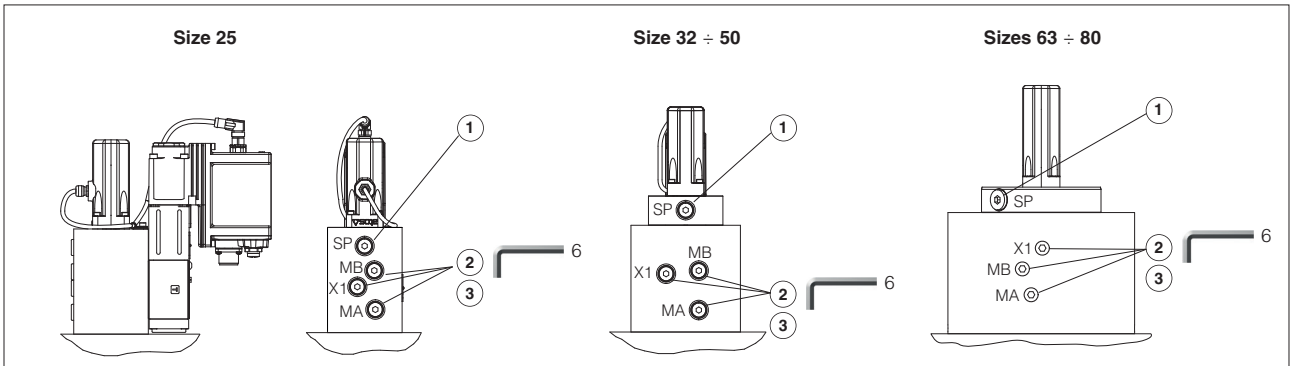

(1) **Plugged port - do not open**

(2) **Air bleeding (MA, MB):**
N° 2 plugs G1/4"
At the machine commissioning it is advisable to bleed the air from piloting chambers, by loosening the 2 plugs shown in the picture.
Operate the valve for few seconds at low pressure and then lock the plugs.

(3) **External pilot pressure (X1):**
N° 1 plug G1/4"

18 POWER SUPPLY AND SIGNALS SPECIFICATIONS

Generic electrical output signals of the valve (e.g. fault or monitor signals) must not be directly used to activate safety functions, like to switch-ON/OFF the machine's safety components, as prescribed by the European standards (Safety requirements of fluid technology systems and components-hydraulics, ISO 4413).

For **LEB-SN-IL** signals see section 19

18.1 Power supply (V+ and V0)

The power supply must be appropriately stabilized or rectified and filtered: apply at least a 10000 µF/40 V capacitance to single phase rectifiers or a 4700 µF/40 V capacitance to three phase rectifiers. In case of separate power supply see 18.2.

⚠ A safety fuse is required in series to each power supply: 2,5 A time lag fuse.

18.2 Power supply for driver's logic and communication (VL+ and VL0) - only for **LES** with **/Z** option and for **LES-SP, SL** with fieldbus

The power supply for driver's logic and communication must be appropriately stabilized or rectified and filtered: apply at least a 10000 µF/40 V capacitance to single phase rectifiers or a 4700 µF/40 V capacitance to three phase rectifiers.
The separate power supply for driver's logic on pin 9 and 10, allow to remove solenoid power supply from pin 1 and 2 maintaining active the diagnostics, USB and fieldbus communications.

⚠ A safety fuse is required in series to each driver's logic and communication power supply: 500 mA fast fuse.

18.3 Flow reference input signal (Q_INPUT+)

The driver controls in closed loop the valve spool position proportionally to the external reference input signal.
Reference input signal is factory preset according to selected valve code, defaults are ±10 VDC for standard and 4 ÷ 20 mA for /I option.
Input signal can be reconfigured via software selecting between voltage and current, within a maximum range of ±10 VDC or ± 20 mA.
Drivers with fieldbus interface can be software set to receive reference signal directly from the machine control unit (fieldbus reference).
Analog reference input signal can be used as on-off commands with input range 0 ÷ 24VDC.

18.4 Pressure or force reference input signal (F_INPUT+) - only for **LES-SP, SL**

Functionality of F_INPUT+ signal (pin 7), is used as reference for the driver pressure/force closed loop (see tech. table **FS500**).
Reference input signal is factory preset according to selected valve code, defaults are 0 ÷ 10 VDC for standard and 4 ÷ 20 mA for /I option.
Input signal can be reconfigured via software selecting between voltage and current, within a maximum range of ±10 VDC or ± 20 mA.
Drivers with fieldbus interface can be software set to receive reference signal directly by the machine control unit (fieldbus reference).
Analog reference input signal can be used as on-off commands with input range 0 ÷ 24VDC.

18.5 Flow monitor output signal (Q_MONITOR) - not for **/F**

The driver generates an analog output signal proportional to the actual spool position of the valve; the monitor output signal can be software set to show other signals available in the driver (e.g. analog reference, fieldbus reference, pilot spool position).
Monitor output signal is factory preset according to selected valve code, defaults are ±10 VDC for standard and 4 ÷ 20 mA for /I option.
Output signal can be reconfigured via software selecting between voltage and current, within a maximum range of ±10 VDC or ± 20 mA.

18.6 Pressure or force monitor output signal (F_MONITOR) - only for **LES-SP, SL**

The driver generates an analog output signal proportional to alternated pressure/force control; the monitor output signal can be software set to show other signals available in the driver (e.g. analog reference, force reference).
Monitor output signal is factory preset according to selected valve code, defaults are 0 ÷ 10 VDC for standard and 4 ÷ 20 mA for /I option.
Output signal can be reconfigured via software selecting between voltage and current, within a maximum range of ±10 VDC or ± 20 mA.

18.7 Enable input signal (ENABLE) - not for standard and **/F**

To enable the driver, supply a 24 VDC on pin 3 (pin C): Enable input signal allows to enable/disable the current supply to the solenoid, without removing the electrical power supply to the driver; it is used to active the communication and the other driver functions when the valve must be disabled for safety reasons. This condition **does not comply** with norms IEC 61508 and ISO 13849.
Enable input signal can be used as generic digital input by software selection.

18.8 Repeat enable output signal (R_ENABLE) - only for **LEB-SN-NP** with **/Z** option

Repeat enable is used as output repeater signal of enable input signal (see 18.7).

18.9 Fault output signal (FAULT) - not for standard and **/Q**

Fault output signal indicates fault conditions of the driver (solenoid short circuits/not connected, reference signal cable broken for 4 ÷ 20 mA input, spool position transducer cable broken, etc.). Fault presence corresponds to 0 VDC, normal working corresponds to 24 VDC.
Fault status is not affected by the Enable input signal. Fault output signal can be used as digital output by software selection.

18.10 Remote pressure/force transducer input signal - only for **LES-SP, SL**

Analog remote pressure transducers or load cell can be directly connected to the driver (see 20.5).
Analog input signal is factory preset according to selected valve code, defaults are ±10 VDC for standard and 4 ÷ 20 mA for /C option.
Input signal can be reconfigured via software selecting between voltage and current, within a maximum range of ±10 VDC or ± 20 mA.
Refer to pressure/force transducer characteristics to select the transducer type according to specific application requirements (see tech table **FS500**).

18.11 Multiple PID selection (D_IN0 and D_IN1) - only **NP** execution for **LES-SP, SL**

Two on-off input signals are available on the main connector to select one of the four pressure (force) PID parameters setting, stored into the driver.
Switching the active setting of pressure PID during the machine cycle allows to optimize the system dynamic response in different hydraulic working conditions (volume, flow, etc.).
Supply a 24 VDC or a 0 VDC on pin 9 and/or pin 10, to select one of the PID settings as indicated by binary code table at side. Gray code can be selected by software.

	PID SET SELECTION			
PIN	SET 1	SET 2	SET 3	SET 4
9	0	24 VDC	0	24 VDC
10	0	0	24 VDC	24 VDC

19 IO-LINK SIGNALS SPECIFICATIONS - only for **LEB-SN-IL**

19.1 Power supply for IO-Link communication (L+ and L-)

The IO-Link master provides dedicated 24 VDC power supply for IO-Link communication.
Maximum power consumption: 2 W
Internal electrical isolation of power L+, L- from P24, N24

19.2 Power supply for driver's logic and valve regulation (P24 and N24)

The IO-Link master provides dedicated 24 VDC power supply for valve regulation, logics and diagnostics.
Maximum power consumption: 50 W
Internal electrical isolation of power P24, N24 from L+, L-

19.3 IO-Link data line (C/Q)

C/Q signal is used to establish communication between IO-Link master and valve.

20 ELECTRONIC CONNECTIONS

20.1 Main connector signals - 7 pin (A1) **Standard**, **/Q** and **/F** options

PIN	Standard	/Q	/F	TECHNICAL SPECIFICATIONS	NOTES
A	**V+**			Power supply 24 VDC	Input - power supply
B	**V0**			Power supply 0 VDC	Gnd - power supply
C	**AGND**		**AGND**	Analog ground	Gnd - analog signal
		ENABLE		Enable (24 VDC) or disable (0 VDC) the valve, referred to V0	Input - on/off signal
D	**Q_INPUT+**			Flow reference input signal: ±10 VDC / ±20 mA maximum range Defaults are ±10 VDC for standard and 4 ÷ 20 mA for /I option	Input - analog signal **Software selectable**
E	**INPUT-**			Negative reference input signal for Q_INPUT+	Input - analog signal
F	**Q_MONITOR** referred to: AGND V0			Flow monitor output signal: ±10 VDC / ±20 mA maximum range Defaults are ±10 VDC for standard and 4 ÷ 20 mA for /I option	Output - analog signal **Software selectable**
			FAULT	Fault (0 VDC) or normal working (24 VDC)	Output - on/off signal
G	**EARTH**			Internally connected to the driver housing	

20.2 Main connector signals - 12 pin (A2) **/Z** option and **LES-SP, SL**

PIN	LEB-SN /Z	LES-SN /Z	LES-SP, SL Fieldbus	LES-SP, SL NP	TECHNICAL SPECIFICATIONS	NOTES
1	**V+**				Power supply 24 VDC	Input - power supply
2	**V0**				Power supply 0 VDC	Gnd - power supply
3	**ENABLE** referred to: V0	VL0	VL0	V0	Enable (24 VDC) or disable (0 VDC) the valve	Input - on/off signal
4	**Q_INPUT+**				Flow reference input signal: ±10 VDC / ±20 mA maximum range Defaults are ±10 VDC for standard and 4 ÷ 20 mA for /I option	Input - analog signal **Software selectable**
5	**INPUT-**				Negative reference input signal for Q_INPUT+ and F_INPUT+	Input - analog signal
6	**Q_MONITOR** referred to: AGND	VL0	VL0	V0	Flow monitor output signal: ±10 VDC / ±20 mA maximum range Defaults are ±10 VDC for standard and 4 ÷ 20 mA for /I option	Output - analog signal **Software selectable**
7	**AGND**				Analog ground	Gnd - analog signal
		NC			Do not connect	
			F_INPUT+		Pressure/Force reference input signal: ±10 VDC / ±20 mA maximum range Defaults are 0 ÷ 10 VDC for standard and 4 ÷ 20 mA for /I option	Input - analog signal **Software selectable**
8	**R_ENABLE**				Repeat enable, output repeater signal of enable input, referred to V0	Output - on/off signal
		NC			Do not connect	
			F_MONITOR referred to: VL0	V0	Pressure/Force monitor output signal: ±10 VDC / ±20 mA maximum range Defaults are 0 ÷ 10 VDC for standard and 4 ÷ 20 mA for /I option	Output - analog signal **Software selectable**
9	**NC**				Do not connect	
		VL+			Power supply 24 VDC for driver's logic and communication	Input - power supply
				D_IN0	Multiple pressure/force PID selection, referred to V0	Input - on/off signal
10	**NC**				Do not connect	
		VL0			Power supply 0 VDC for driver's logic and communication	Gnd - power supply
				D_IN1	Multiple pressure/force PID selection, referred to V0	Input - on/off signal
11	**FAULT** referred to: V0	VL0	VL0	V0	Fault (0 VDC) or normal working (24 VDC)	Output - on/off signal
PE	**EARTH**				Internally connected to the driver housing	

Note: do not disconnect VL0 before VL+ when the driver is connected to PC USB port

20.3 IO-Link connector signals - M12 - 5 pin - Coding A, port class B (A) only for **LEB-SN-IL**

PIN	SIGNAL	TECHNICAL SPECIFICATIONS	NOTES
1	**L+**	Power supply 24 VDC for IO-Link communication	Input - power supply
2	**P24**	Power supply 24 VDC for valve regulation, logics and diagnostics	Input - power supply
3	**L-**	Power supply 0 VDC for IO-Link communication	Gnd - power supply
4	**C/Q**	IO-Link data line	Input / Output - signal
5	**N24**	Power supply 0 VDC for valve regulation, logics and diagnostics	Gnd - power supply

Note: L+, L- and P24, N24 are electrically isolated

20.4 Communications connectors (B) - (C)

(B) **USB connector - M12 - 5 pin** always present		
PIN	**SIGNAL**	**TECHNICAL SPECIFICATION** (1)
1	**+5V_USB**	Power supply
2	**ID**	Identification
3	**GND_USB**	Signal zero data line
4	**D-**	Data line -
5	**D+**	Data line +

(C1) (C2) **BC fieldbus execution, connector - M12 - 5 pin**		
PIN	**SIGNAL**	**TECHNICAL SPECIFICATION** (1)
1	**CAN_SHLD**	Shield
2	**not used**	(C1) - (C2) pass-through connection (2)
3	**CAN_GND**	Signal zero data line
4	**CAN_H**	Bus line (high)
5	**CAN_L**	Bus line (low)

(C1) (C2) **BP fieldbus execution, connector - M12 - 5 pin**		
PIN	**SIGNAL**	**TECHNICAL SPECIFICATION** (1)
1	**+5V**	Termination supply signal
2	**LINE-A**	Bus line (high)
3	**DGND**	Data line and termination signal zero
4	**LINE-B**	Bus line (low)
5	**SHIELD**	

(C1) (C2) **EH, EW, EI, EP fieldbus execution, connector - M12 - 4 pin**		
PIN	**SIGNAL**	**TECHNICAL SPECIFICATION** (1)
1	**TX+**	Transmitter
2	**RX+**	Receiver
3	**TX-**	Transmitter
4	**RX-**	Receiver
Housing	**SHIELD**	

(1) Shield connection on connector's housing is recommended

(2) Pin 2 can be fed with external +5V supply of CAN interface

20.5 Remote pressure/force transducer connector - M12 - 5 pin - only for **SP, SL** (D)

PIN	SIGNAL	TECHNICAL SPECIFICATION	Voltage	Current
1	**VF +24V**	Power supply +24VDC	Connect	Connect
2	**TR**	Signal transducer ±10 VDC / ±20 mA maximum range, software selectable Defaults are ±10 VDC for standard and 4 ÷ 20 mA for /C option	Connect	Connect
3	**AGND**	Common GND for transducer power and signals	Connect	/
4	**NC**	Not Connect	/	/
5	**NC**	Not Connect	/	/

(1) Single/double transducer configuration is software selectable

Remote pressure transducers connection - example

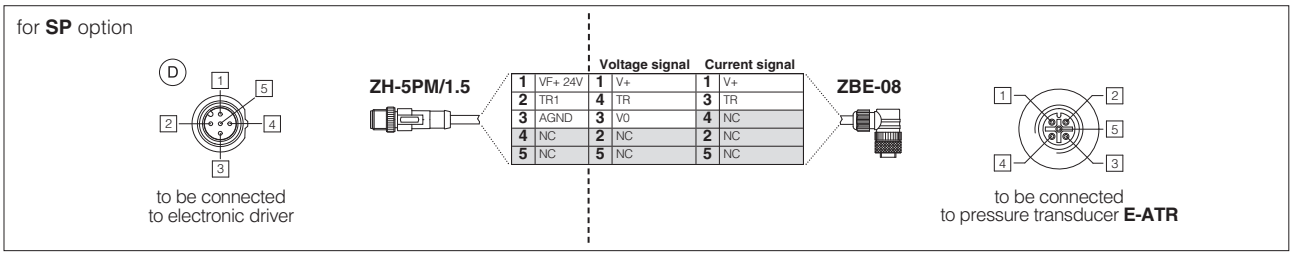

Note: pin layout always referred to driver's view

20.6 LEB-SN-NP connections layout

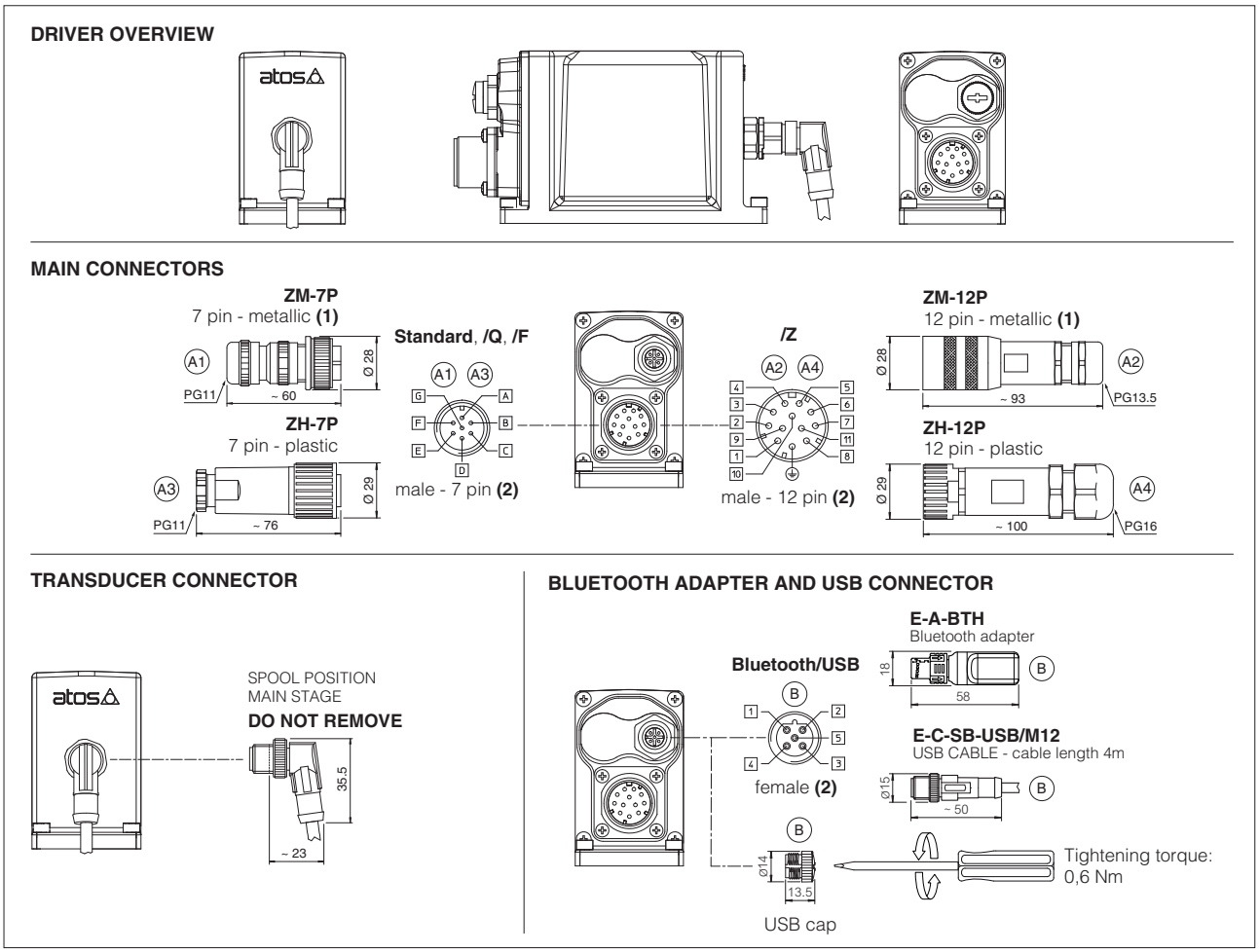

(1) Use of metallic connectors is strongly recommended in order to fulfill EMC requirements **(2)** Pin layout always referred to driver's view

20.7 LEB-SN-IL connections layout

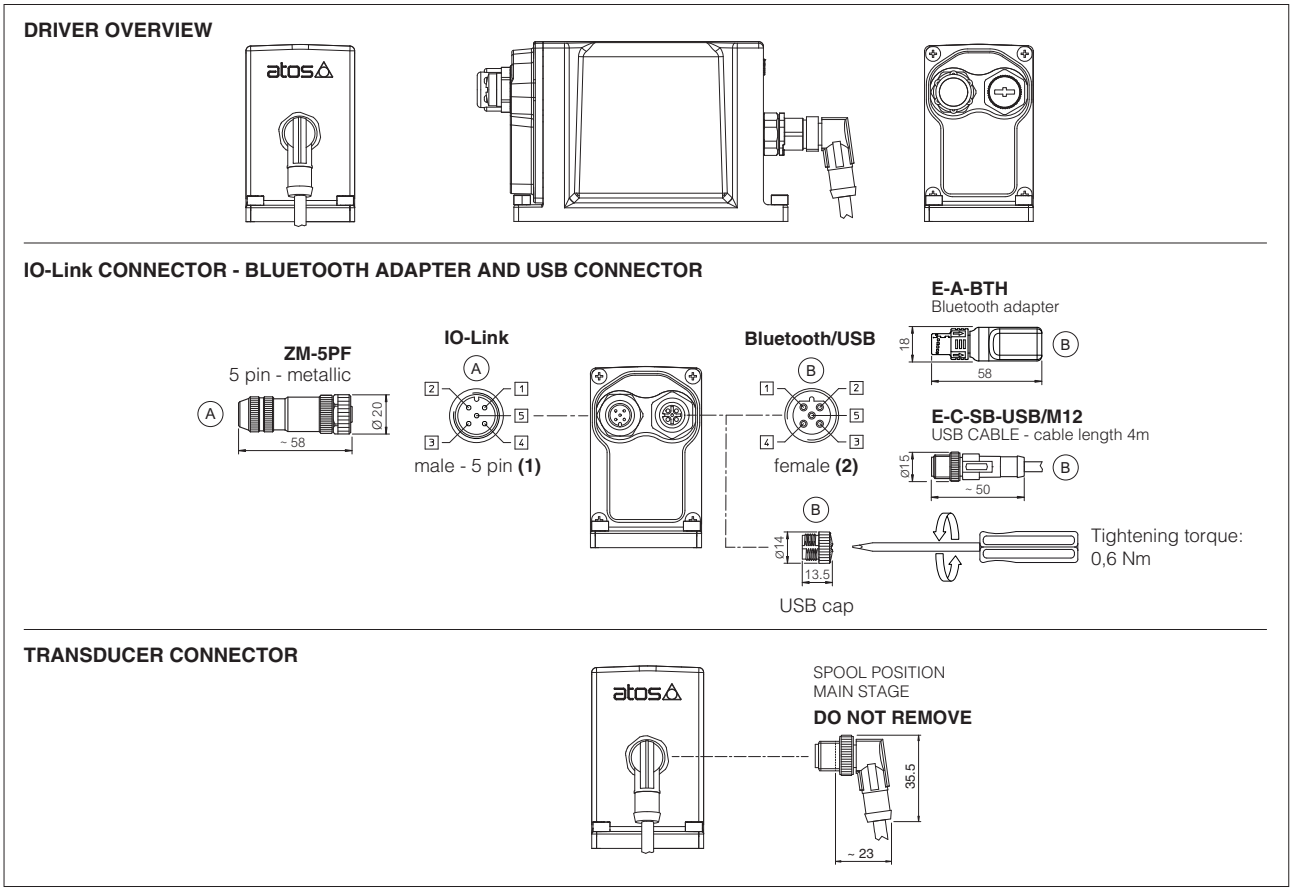

(1) Pin layout always referred to driver's view

20.8 LES connections layout

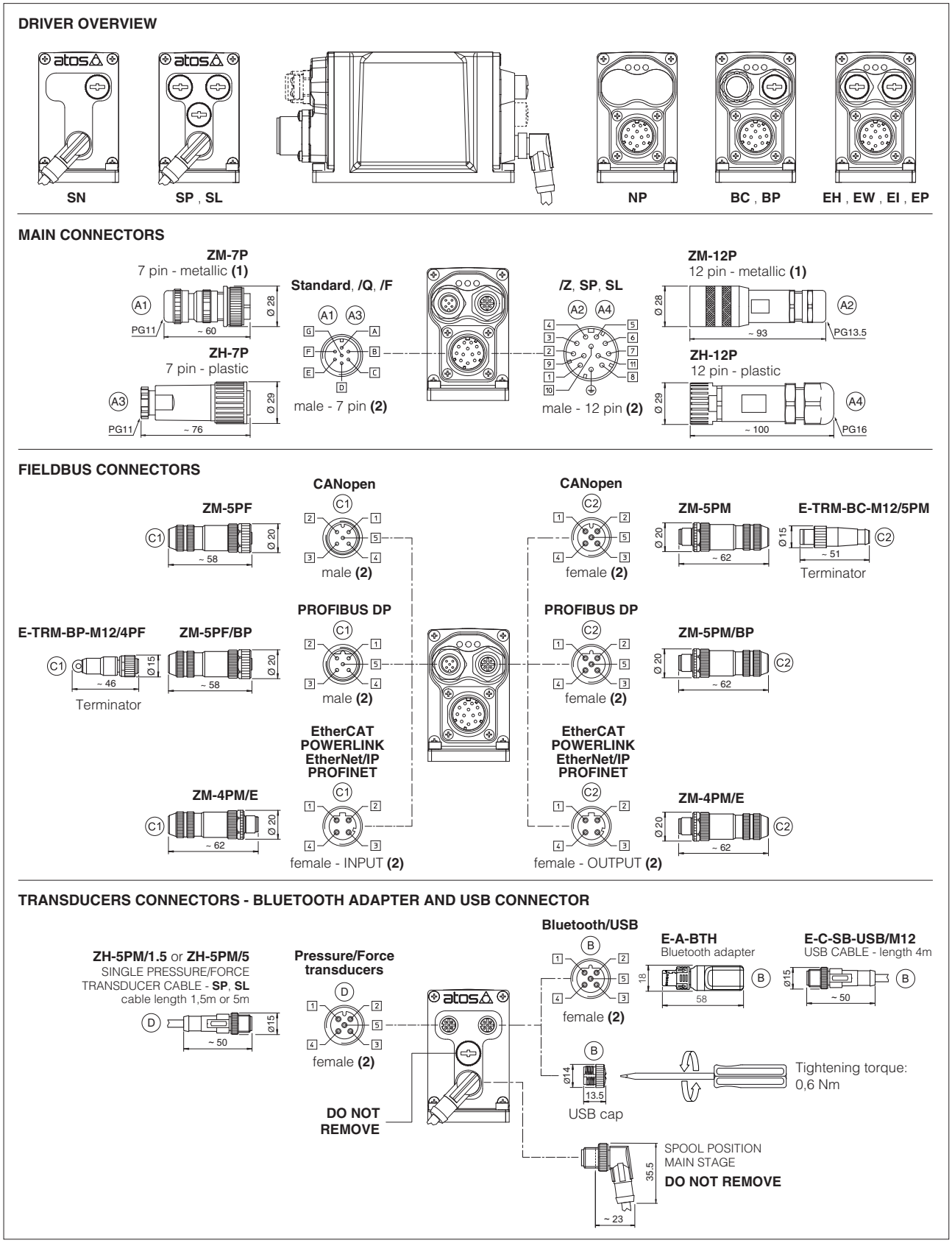

(1) Use of metallic connectors is strongly recommended in order to fulfill EMC requirements **(2)** Pin layout always referred to driver's view

19.9 Diagnostic LEDs - only for LES

Three leds show driver operative conditions for immediate basic diagnostics. Please refer to the driver user manual for detailed information.

FIELDBUS / LEDS	NP Not Present	BC CANopen	BP PROFIBUS DP	EH EtherCAT	EW POWERLINK	EI EtherNet/IP	EP PROFINET
L1	VALVE STATUS			LINK/ACT			
L2	NETWORK STATUS			NETWORK STATUS			
L3	SOLENOID STATUS			LINK/ACT			

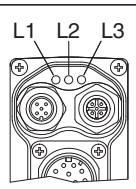

21 IN / OUT FIELDBUS COMMUNICATION CONNECTORS

Two fieldbus communication connectors are always available for digital drivers executions BC, BP, EH, EW, EI, EP. This features allows considerable technical advantages in terms of installation simplicity, wirings reduction and also avoid the usage expensive T-connectors.
For BC and BP executions the fieldbus connectors have an internal pass-through connection and can be used like end point of the fieldbus network, using an external terminator (see tech table **GS500**).
For EH, EW, EI and EP executions the external terminators are not required: each connector is internally terminated.

BC and BP pass-through connection

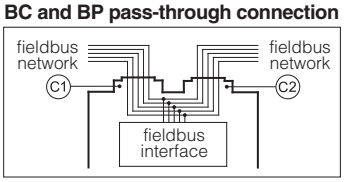

22 CONNECTORS CHARACTERISTICS - to be ordered separately

22.1 Main connectors - 7 pin

CONNECTOR TYPE	POWER SUPPLY AND SIGNALS	POWER SUPPLY AND SIGNALS
CODE	A1 ZM-7P	A3 ZH-7P
Type	7pin female straight circular	7pin female straight circular
Standard	According to MIL-C-5015	According to MIL-C-5015
Material	Metallic	Plastic reinforced with fiber glass
Cable gland	PG11	PG11
Recommended cable	LiYCY 7 x 0,75 mm² max 20 m (logic and power supply) or LiYCY 7 x 1 mm² max 40 m (logic and power supply)	LiYCY 7 x 0,75 mm² max 20 m (logic and power supply) or LiYCY 7 x 1 mm² max 40 m (logic and power supply)
Conductor size	up to 1 mm² - available for 7 wires	up to 1 mm² - available for 7 wires
Connection type	to solder	to solder
Protection (EN 60529)	IP 67	IP 67

22.2 Main connectors - 12 pin

CONNECTOR TYPE	POWER SUPPLY AND SIGNALS	POWER SUPPLY AND SIGNALS
CODE	A2 ZM-12P	A4 ZH-12P
Type	12pin female straight circular	12pin female straight circular
Standard	DIN 43651	DIN 43651
Material	Metallic	Plastic reinforced with fiber glass
Cable gland	PG13,5	PG16
Recommended cable	LiYCY 12 x 0,75 mm² max 20 m (logic and power supply)	LiYCY 10 x 0,14mm² max 40 m (logic) LiYY 3 x 1mm² max 40 m (power supply)
Conductor size	0,5 mm² to 1,5 mm² - available for 12 wires	0,14 mm² to 0,5 mm² - available for 9 wires 0,5 mm² to 1,5 mm² - available for 3 wires
Connection type	to crimp	to crimp
Protection (EN 60529)	IP 67	IP 67

22.3 IO-Link connector - only for **LEB-SN-IL**

CONNECTOR TYPE	IL IO-Link
CODE	A ZM-5PF
Type	5pin female straight circular
Standard	M12 coding A – IEC 61076-2-101
Material	Metallic
Cable gland	Pressure nut - cable diameter 6÷8 mm
Recommended cable	5 x 0,75 mm² max 20 m
Connection type	screw terminal
Protection (EN 60529)	IP 67

22.4 Fieldbus communication connectors

CONNECTOR TYPE	BC CANopen (1)		BP PROFIBUS DP (1)		EH EtherCAT, EW POWERLINK, EI EtherNet/IP, EP PROFINET (2)
CODE	C1 ZM-5PF	C2 ZM-5PM	C1 ZM-5PF/BP	C2 ZM-5PM/BP	C1 C2 ZM-4PM/E
Type	5 pin female straight circular	5 pin male straight circular	5 pin female straight circular	5 pin male straight circular	4 pin male straight circular
Standard	M12 coding A – IEC 61076-2-101		M12 coding B – IEC 61076-2-101		M12 coding D – IEC 61076-2-101
Material	Metallic		Metallic		Metallic
Cable gland	Pressure nut - cable diameter 6÷8 mm		Pressure nut - cable diameter 6÷8 mm		Pressure nut - cable diameter 4÷8 mm
Cable	CANbus Standard (DR 303-1)		PROFIBUS DP Standard		Ethernet standard CAT-5
Connection type	screw terminal		screw terminal		terminal block
Protection (EN 60529)	IP67		IP 67		IP 67

(1) E-TRM-** terminators can be ordered separately - see tech table **GS500**

(2) Internally terminated

22.5 Remote pressure/Force transducer connectors - only for **SP, SL**

CONNECTOR TYPE	SP, SL - Single transducer	
CODE	D ZH-5PM/1.5	D ZH-5PM/5
Type	5 pin male straight circular	
Standard	M12 coding A – IEC 61076-2-101	
Material	Plastic	
Cable gland	Connector moulded on cables 1,5 m length	5 m length
Cable	5 x 0,25 mm²	
Connection type	molded cable	
Protection (EN 60529)	IP 67	

23 FASTENING BOLTS AND VALVE MASS

Type	Size	Fastening bolts (1)	Mass [kg]
LIQZP	25	4 socket head screws M12x100 class 12.9 Tightening torque = 125 Nm	8,8
	32	4 socket head screws M16x60 class 12.9 Tightening torque = 300 Nm	11,2
	40	4 socket head screws M20x70 class 12.9 Tightening torque = 600 Nm	17,3
	50	4 socket head screws M20x80 class 12.9 Tightening torque = 600 Nm	24,6
	63	4 socket head screws M30x120 class 12.9 Tightening torque = 2100 Nm	44,6
	80	8 socket head screws M24x80 class 12.9 Tightening torque = 1000 Nm	72,2

(1) Fastening bolts supplied with the valve

24 MAIN CONNECTORS INSTALLATION DIMENSIONS

Installation 1 - possible interference between manifold and main connector

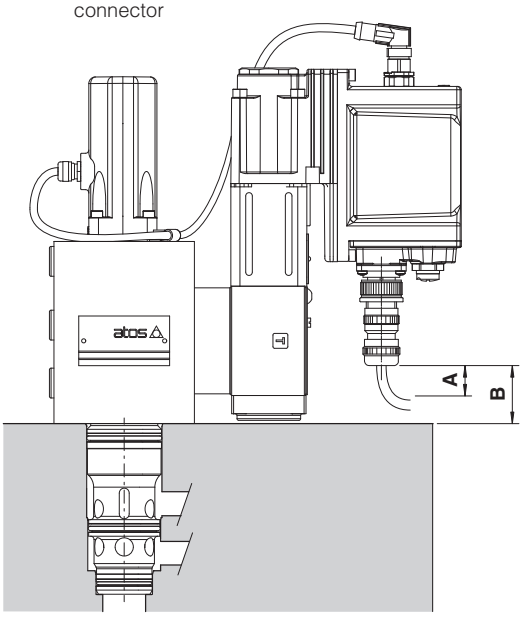

A = 15 mm space to remove the 7 or 12 pin main connectors

B = Clearance between main connector to valve's mounting surface. See the below table to verify eventual interferences, depending to the valve size and connector type

Installation 2 - no interference

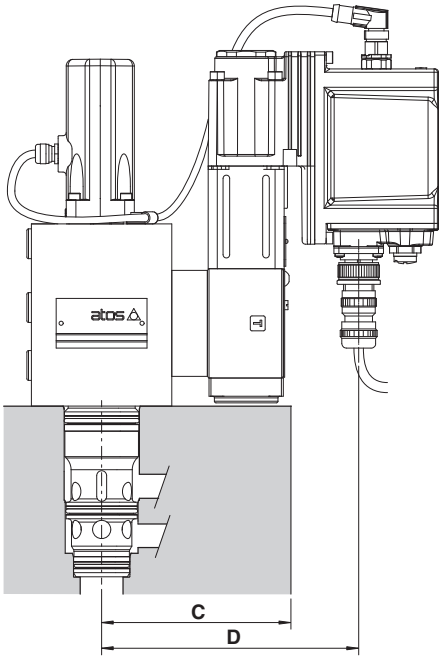

C = Max manifold dimension to avoid interference with the main connector, see below table

Reference dimension	Main connector code	Valve size					
		25	32	40	50	63	80
B	ZM-7P	32	32	32	45	68	68
	ZH-7P	**(1)**	**(1)**	**(1)**	29	52	52
	ZM-12P	**(1)**	**(1)**	**(1)**	**(1)**	35	35
	ZH-12P	**(1)**	**(1)**	**(1)**	**(1)**	**(1)**	**(2)**
C (max) for **standard valve**	-	134	141	154	161	192	222
C (max) for **/A option**	-	114	121	134	141	172	202
D for **standard valve**	-	154	161	174	181	212	242
D for **/A option**	-	134	141	154	161	192	222

Above dimenions refer to the main connector fully screwed to driver's connector. The space **A** = 15 mm to remove the connector must be considered

(1) The connector installation can be performed only if the valve's driver protrudes from the edge of the relevant mounting manifold as rapresented in above "Installation 2"

(2) The connector installation may be critic, depending to the cable size and bending radius

25 INSTALLATION DIMENSIONS [mm]

LIQZP-LEB-253
LIQZP-LES-253

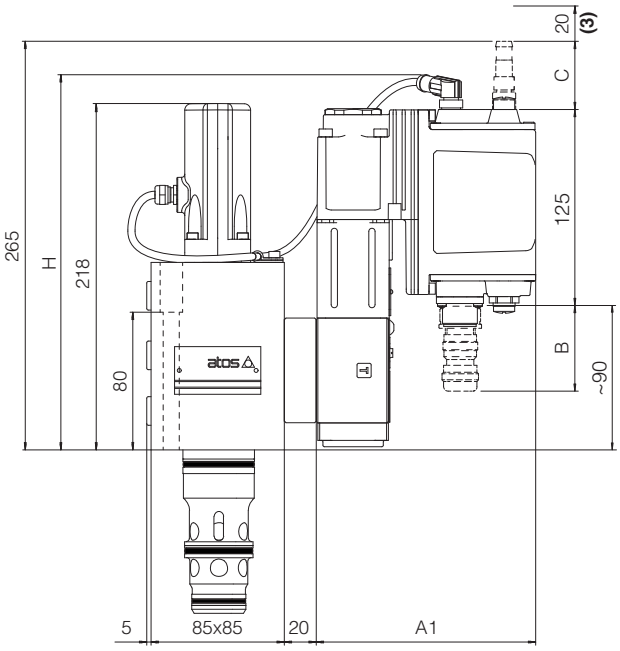

LIQZP-LEB-323
LIQZP-LES-323

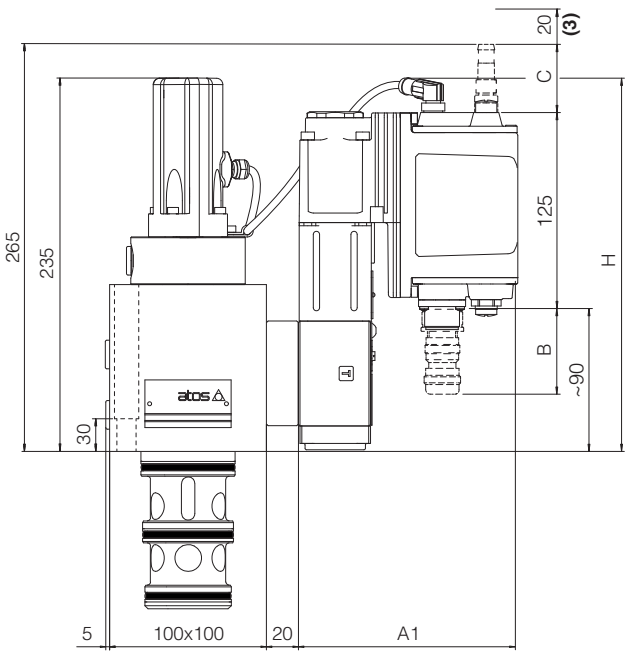

LIQZP-LEB-403
LIQZP-LES-403

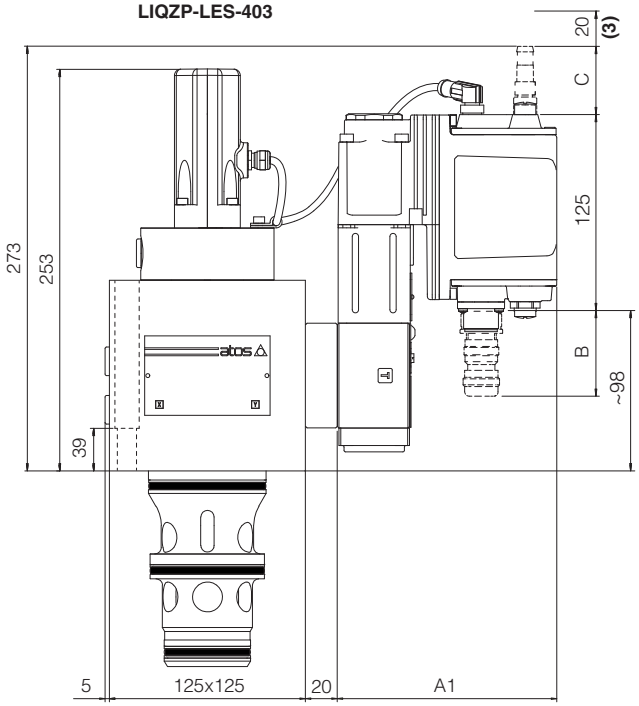

LIQZP	A1	B (1)	C (2)	H
LEB - SN - IL	140	60	-	242
LEB - SN - NP	140	60	-	242
LES - SN - NP, BC, BP, EH	140	60	58	235
LES - SN - EW, EI, EP	155	60	58	235
LES - SP, SF, SL	155	60	58	235

(1) The indicated dimension refers to the main connector ZM-7P. See section 24 for main connectors installation dimensions
(2) The indicated dimension refers to the longer connectors or Bluetooth adapter
For dimensions of connectors and Bluetooth adapter, see sections 20.6, 20.7 and 20.8
(3) Space required for connection cable and for connector removal

Note: for mounting surface and cavity dimensions, see table P006

LIQZP-LEB-503
LIQZP-LES-503

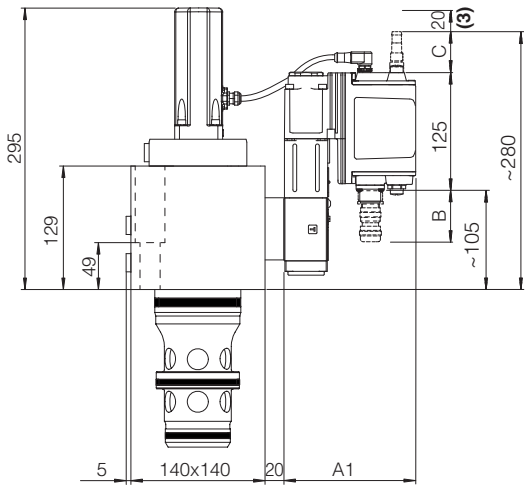

LIQZP-LEB-633
LIQZP-LES-633

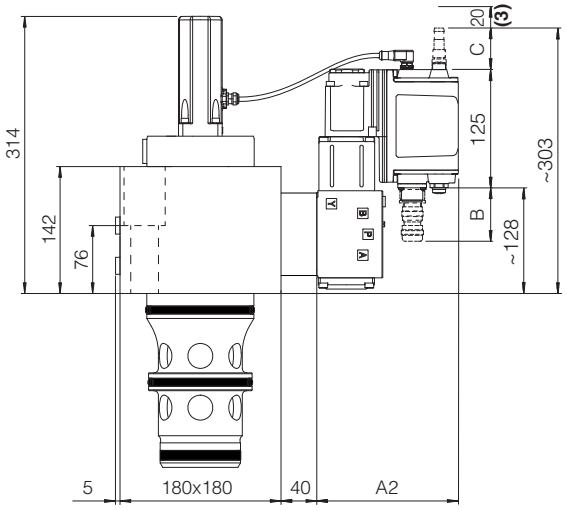

LIQZP-LEB-803
LIQZP-LES-803

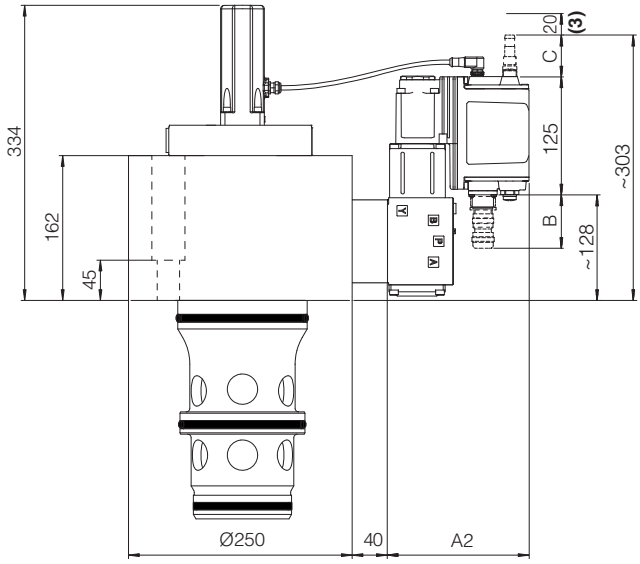

LIQZP	A1	A2	B (1)	C (2)
LEB - SN - IL	140	150	60	-
LEB - SN - NP	140	150	60	-
LES - SN - NP, BC, BP, EH	140	150	60	58
LES - SN - EW, EI, EP	155	165	60	58
LES - SP, SF, SL	155	165	60	58

(1) The indicated dimension refers to the main connector ZM-7P. See section 24 for main connectors installation dimensions
(2) The indicated dimension refers to the longer connectors or Bluetooth adapter
For dimensions of connectors and Bluetooth adapter, see sections 20.6, 20.7 and 20.8
(3) Space required for connection cable and for connector removal

Note: for mounting surface and cavity dimensions, see table P006

26 RELATED DOCUMENTATION

FS001	Basics for digital electrohydraulics
FS500	Digital proportional valves with p/Q control
FS900	Operating and maintenance information for proportional valves
GS500	Programming tools
GS510	Fieldbus
GS520	IO-Link interface
K800	Electric and electronic connectors
P006	Mounting surfaces and cavities for cartridge valves
QB340	Quickstart for LEB valves commissioning
QF340	Quickstart for LES valves commissioning
E-MAN-RI-LEB	TEB/LEB user manual
E-MAN-RI-LES	TES/LES user manual
E-MAN-RI-LES-S	TES/LES with p/Q control user manual

Servoproportional 3-way cartridges

piloted, with two LVDT transducers, sizes from 25 to 80

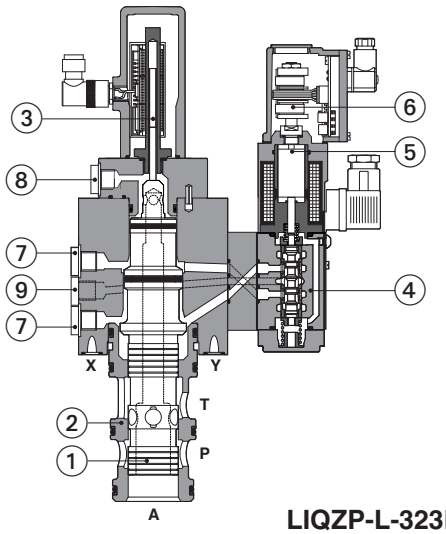

① Poppet
② Sleeve
③ Main stage LVDT transducer
④ Pilot valve
⑤ Proportional solenoid
⑥ Pilot valve LVDT transducer
⑦ Air bleeding
⑧ Air suction port
⑨ X1 port (external pilot pressure)

LIQZP-L-323L4

LIQZP-L

Servoproportional 3-way cartridge valves specifically designed for high speed closed loop controls.

The valves operate in association with digital off-board divers, see section 2.

The two LVDT transducers (pilot and main stage) grant very high regulation accuracy and response sensitivity.

The cartridge execution for blocks installation grants high flow capabilities and minimized pressure drops.

Spool regulation characteristics: L = linear

Size: **25** ÷ **80** - ISO 7368
Max flow: **500** ÷ **5000 l/min**
Max pressure: **420 bar**

1 MODEL CODE

LIQZP	-	L	-	25	3	L4	/	*	*	/	*

Servoproportional 3-way cartridge, piloted

L = two LVDT transducers

Valve size, see section 4 :

size	**25**	**32**	**40**
l/min	185	330	420
size	**50**	**63**	**80**
l/min	780	1250	2100

Nominal flow (l/min) at Δp 5 bar

Configuration: **3** = 3 way

functional symbol: **Standard**

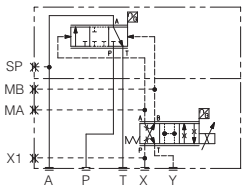

option **/A**

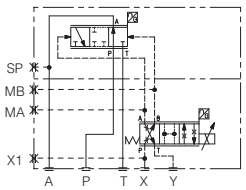

simplified symbol: **Standard**

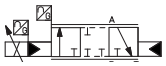

option **/A**

Seals material, see section 6 :

- = NBR
PE = FKM
BT = NBR low temperature

Series number

Hydraulic options:

A = reversal hydraulic configuration of main spool: P-A in rest position

Spool type, regulating characteristics:

L4 = linear

2 OFF-BOARD ELECTRONIC DRIVERS

Please include in the driver order also the complete code of the connected proportional valve.

Drivers model	E-BM-LEB	E-BM-LES
Type	digital	digital
Format	DIN-rail panel	DIN-rail panel
Tech table	GS230	GS240

WARNING

To avoid overheating and possible damage of the electronic driver, the valves must be never energized without hydraulic supply to the pilot stage. In case of prolonged pauses of the valve operation during the machine cycle, it is always advisable to disable the driver.

3 GENERAL CHARACTERISTICS

Assembly position	Any position
Subplate surface finishing to ISO 4401	Acceptable roughness index: Ra ≤0,8, recommended Ra 0,4 – Flatness ratio 0,01/100
MTTFd valves according to EN ISO 13849	75 years, for futher details see technical table P007
Ambient temperature range	**Standard** = -20°C ÷ +60°C **/PE** option = -20°C ÷ +60°C **/BT** option = -40°C ÷ +60°C
Storage temperature range	**Standard** = -20°C ÷ +70°C **/PE** option = -20°C ÷ +70°C **/BT** option = -40°C ÷ +70°C
Surface protection	Zinc coating with black passivation, galvanic treatment (driver housing)
Corrosion resistance	Salt spray test (EN ISO 9227) > 200 h
Vibration resistance	See technical table G004
Compliance	CE according to EMC directive 2014/30/EU (Immunity: EN 61000-6-2; Emission: EN 61000-6-3) RoHS Directive 2011/65/EU as last update by 2015/863/EU REACH Regulation (EC) n°1907/2006

4 HYDRAULIC CHARACTERISTICS - based on mineral oil ISO VG 46 at 50 °C

Size	**25**	**32**	**40**	**50**	**63**	**80**
Nominal flow Δp P-A or A-T [l/min]						
Δp = 5 bar	185	330	420	780	1250	2100
Δp = 10 bar	260	470	590	1100	1750	3000
Max permissible flow	500	850	1050	2000	3100	5000
Max pressure [bar]	Ports P, A, T = **420** X = 350 Y ≤ 10					
Nominal flow of pilot valve at Δp = 70 bar [l/min]	4	8	28	40	100	100
Leakage of pilot valve at P = 100 bar [l/min]	0,2	0,2	0,5	0,7	0,7	0,7
Piloting pressure [bar]	min: 40% of system pressure max 350 recommended 140 ÷ 160					
Piloting volume [cm³]	2,16	7,2	8,9	17,7	33,8	42,7
Piloting flow **(1)** [l/min]	6,5	20	25	43	68	76
Response time 0 ÷ 100% step signal **(2)** [ms]	21	22	22	25	30	34
Hysteresis [% of the max regulation]	≤ 0,1					
Repeatability [% of the max regulation]	± 0,1					
Thermal drift	zero point displacement < 1% at ΔT = 40°C					

(1) With step reference input 0÷100%
(2) With pilot pressure = 140 bar, see datailed diagrams in section 7.2

WARNING

The loss of the pilot pressure causes the undefined position of the main spool.
The sudden interruption of the power supply during the valve operation causes the immediate main spool opening A → T or P → A (for option /A).
This could cause pressure surges in the hydraulic system or high decelerations which may lead to machine damages.

5 ELECTRICAL CHARACTERISTICS

Max power consumption	30 W
Max. solenoid current	2,6 A
Coil resistance R at 20°C	3 ÷ 3,3 Ω
Insulation class	H (180°) Due to the occuring surface temperatures of the solenoid coils, the European standards ISO 13732-1 and EN982 must be taken into account
Protection degree to DIN EN60529	IP65 with mating connectors
Duty factor	Continuous rating (ED=100%)

6 SEALS AND HYDRAULIC FLUIDS - for other fluids not included in below table, consult our technical office

Seals, recommended fluid temperature	NBR seals (standard) = -20°C ÷ +60°C, with HFC hydraulic fluids = -20°C ÷ +50°C FKM seals (/PE option) = -20°C ÷ +80°C NBR low temp. seals (/BT option) = -40°C ÷ +60°C, with HFC hydraulic fluids = -20°C ÷ +50°C		
Recommended viscosity	20÷100 mm²/s - max allowed range 15 ÷ 380 mm²/s		
Max fluid contamination level — normal operation	ISO4406 class 18/16/13 NAS1638 class 7		see also filter section at www.atos.com or KTF catalog
Max fluid contamination level — longer life	ISO4406 class 16/14/11 NAS1638 class 5		
Hydraulic fluid	**Suitable seals type**	**Classification**	**Ref. Standard**
Mineral oils	NBR, FKM, NBR low temp.	HL, HLP, HLPD, HVLP, HVLPD	DIN 51524
Flame resistant without water	FKM	HFDU, HFDR	ISO 12922
Flame resistant with water	NBR, NBR low temp.	HFC	

7 DIAGRAMS (based on mineral oil ISO VG 46 at 50 °C)

10.1 Regulation diagrams, see note

1 = LIQZP (all sizes)

Hydraulic configuration vs. reference signal:

		standard	option /A
Reference signal	0 ÷+10 V 12÷20 mA	P → A	A → T
Reference signal	0 ÷-10 V 4÷12 mA	A → T	P → A

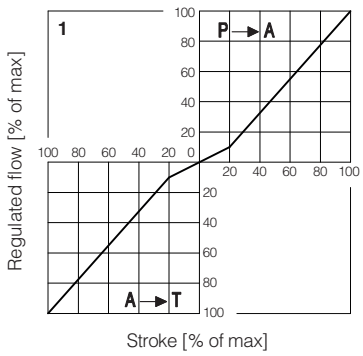

7.2 Response time

The response times in below diagrams are measured at different steps of the reference input signal. They have to be considered as average values. For the valves with digital electronics the dynamics performances can be optimized by setting the internal software parameters.

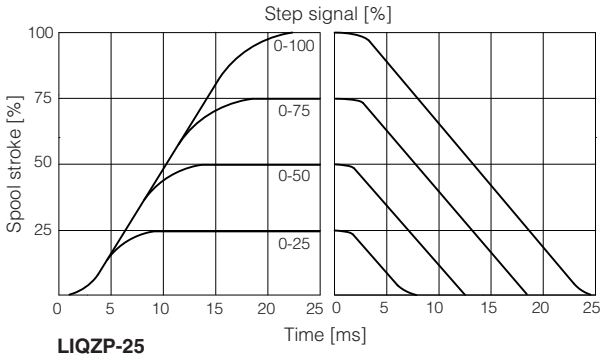

LIQZP-25
LIQZP-32
LIQZP-40

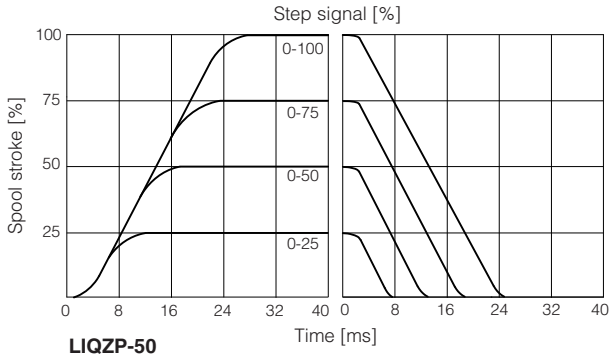

LIQZP-50

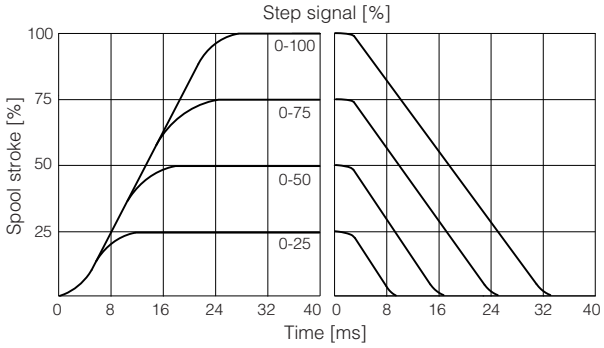

LIQZP-63

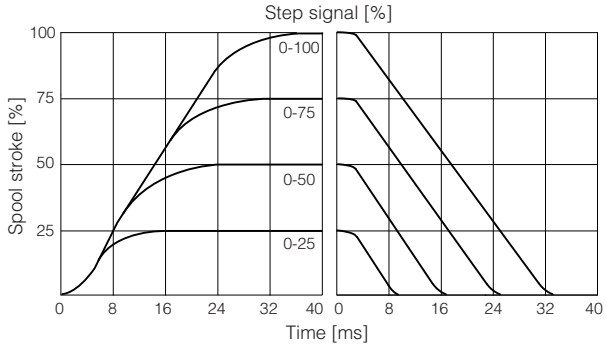

LIQZP-80

7.3 Pressure gain diagram

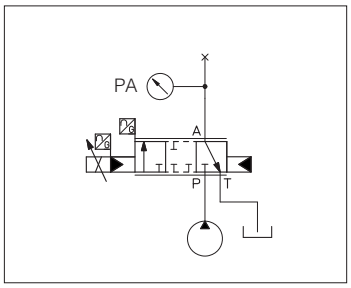

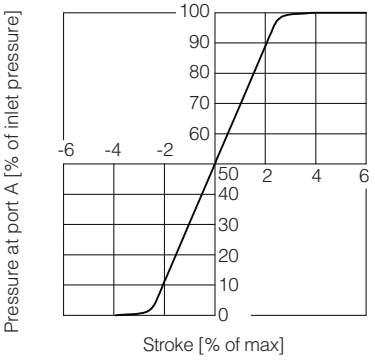

7.4 Bode diagrams

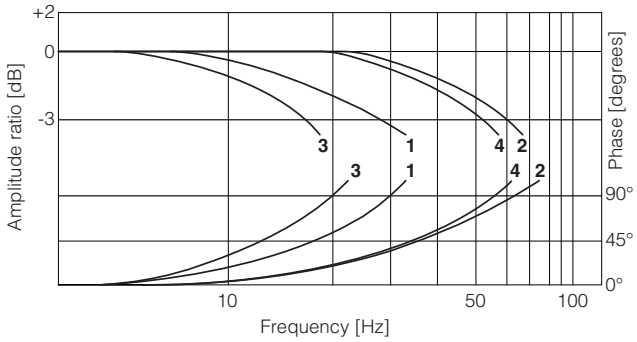

1 = LIQZP-L-253L4: ± 90%
2 = LIQZP-L-253L4: ± 5%
3 = LIQZP-L-323L4: ± 90%
4 = LIQZP-L-323L4: ± 5%

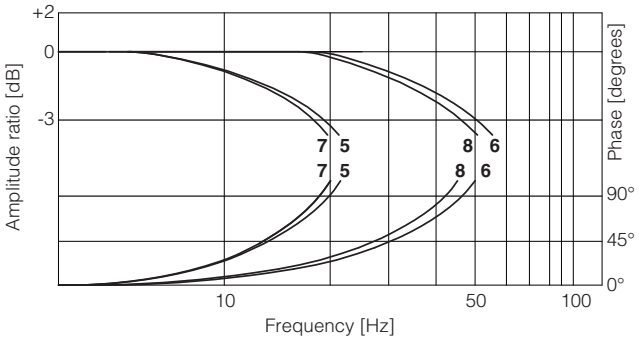

5 = LIQZP-L-403L4: ± 90%
6 = LIQZP-L-403L4: ± 5%
7 = LIQZP-L-503L4: ± 90%
8 = LIQZP-L-503L4: ± 5%

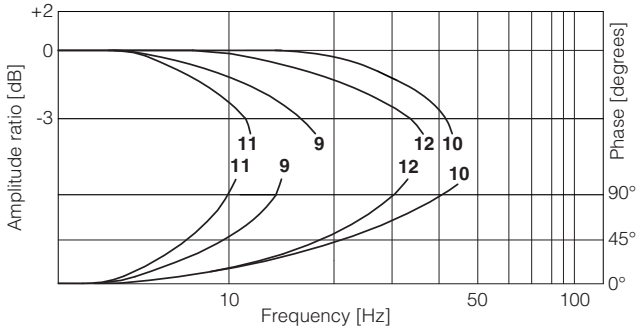

9 = LIQZP-L-633L4: ± 90%
10 = LIQZP-L-633L4: ± 5%
11 = LIQZP-L-803L4: ± 90%
12 = LIQZP-L-803L4: ± 5%

8 HYDRAULIC OPTIONS

A = The standard valve version provides the hydraulic configuration A-T of main spool in absence of electric power supply to the valve.
The option /A provides the reverse configuration P-A of main spool in absence of electric power supply to the valve.
This execution is particularly requested in vertical presses for safety reasons, because in case of electric power breakdown the P-A configuration of the main spool prevents the uncontrolled and dangerous downstroke of the press ram.

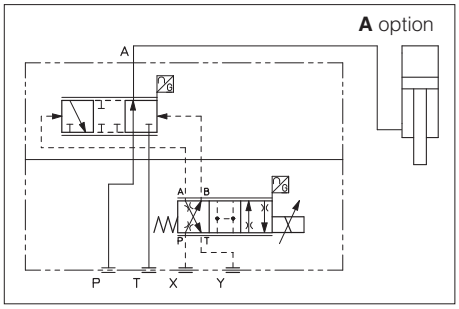

9 ELECTRICAL CONNECTION - connectors supplied with the valve

9.1 Solenoid connector

PIN	SIGNAL	TECHNICAL SPECIFICATION	Connector code 666
1	**COIL**	Power supply	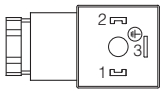
2	**COIL**	Power supply	
3	**GND**	Ground	

9.2 LVDT pilot transducer connector

PIN	SIGNAL	TECHNICAL SPECIFICATION	Connector code 345
1	**TR**	Output signal	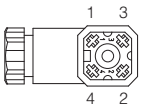
2	**VT-**	Power supply -15VDC	
3	**VT+**	Power supply +15VDC	
4	**GND**	Ground	

9.3 LVDT main stage transducer connector

PIN	SIGNAL	TECHNICAL SPECIFICATION	Connector code ZBE-08
1	**PROG**	Do not connect	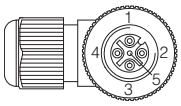
2	**VT+**	Power supply +15VDC	
3	**AGND**	Ground	
4	**TR**	Output signal	
5	**VT-**	Power supply -15VDC	

10 AIR BLEEDING

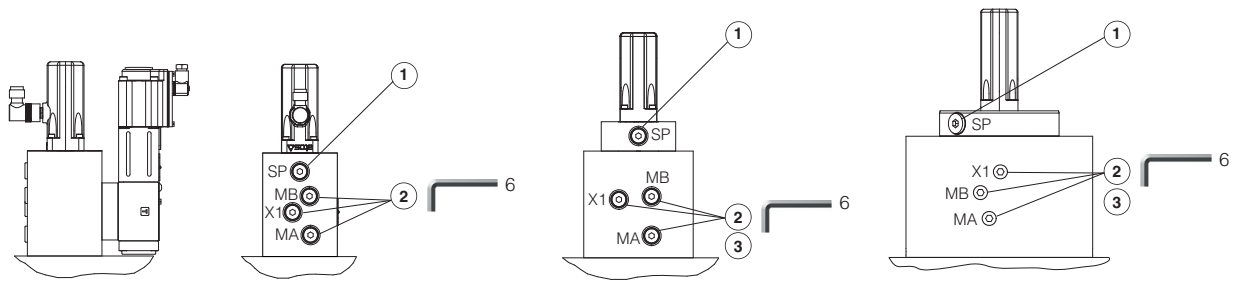

(1) **Plugged port - do not open**

(2) **Air bleeding (MA, MB):**

N° 2 plugs G1/4”

At the machine commissioning it is advisable to bleed the air from piloting chambers, by loosening the 2 plugs shown in the picture.

Operate the valve for few seconds at low pressure and then lock the plugs.

(3) **External pilot pressure (X1):**

N° 1 plug G1/4”

11 FASTENING BOLTS AND VALVE MASS

Type	Size	Fastening bolts (1)	Mass [kg]
LIQZP	25	4 socket head screws M12x100 class 12.9 Tightening torque = 125 Nm	8,8
	32	4 socket head screws M16x60 class 12.9 Tightening torque = 300 Nm	11,2
	40	4 socket head screws M20x70 class 12.9 Tightening torque = 600 Nm	17,3
	50	4 socket head screws M20x80 class 12.9 Tightening torque = 600 Nm	24,6
	63	4 socket head screws M30x120 class 12.9 Tightening torque = 2100 Nm	44,6
	80	8 socket head screws M24x80 class 12.9 Tightening torque = 1000 Nm	72,2

(1) Fastening bolts supplied with the valve

12 INSTALLATION DIMENSIONS [mm]

LIQZP-L-253

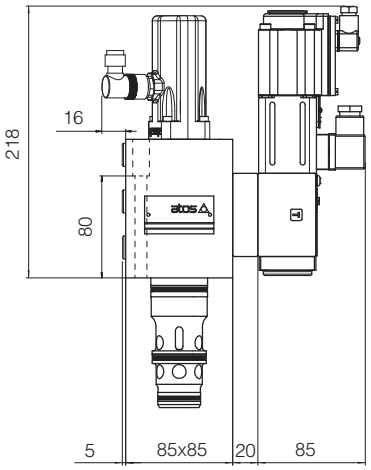

LIQZP-L-323

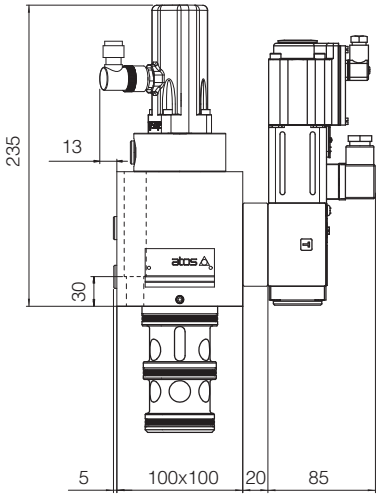

LIQZP-L-403

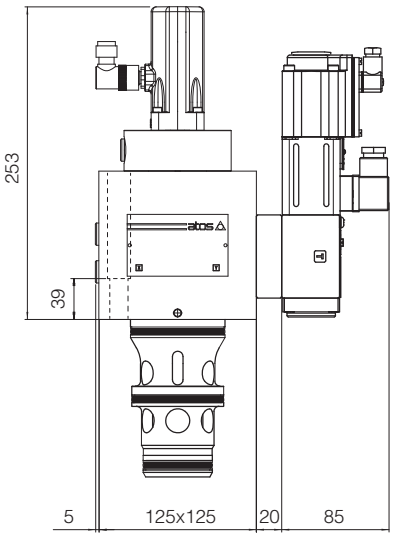

LIQZP-L-503

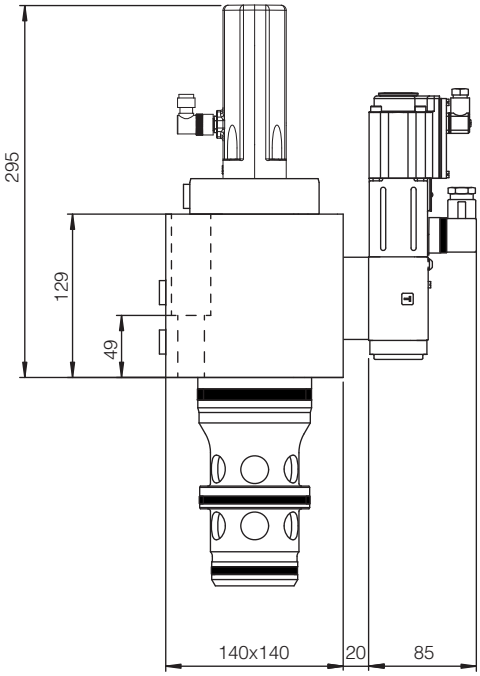

Note: for mounting surface and cavity dimensions, see table P006

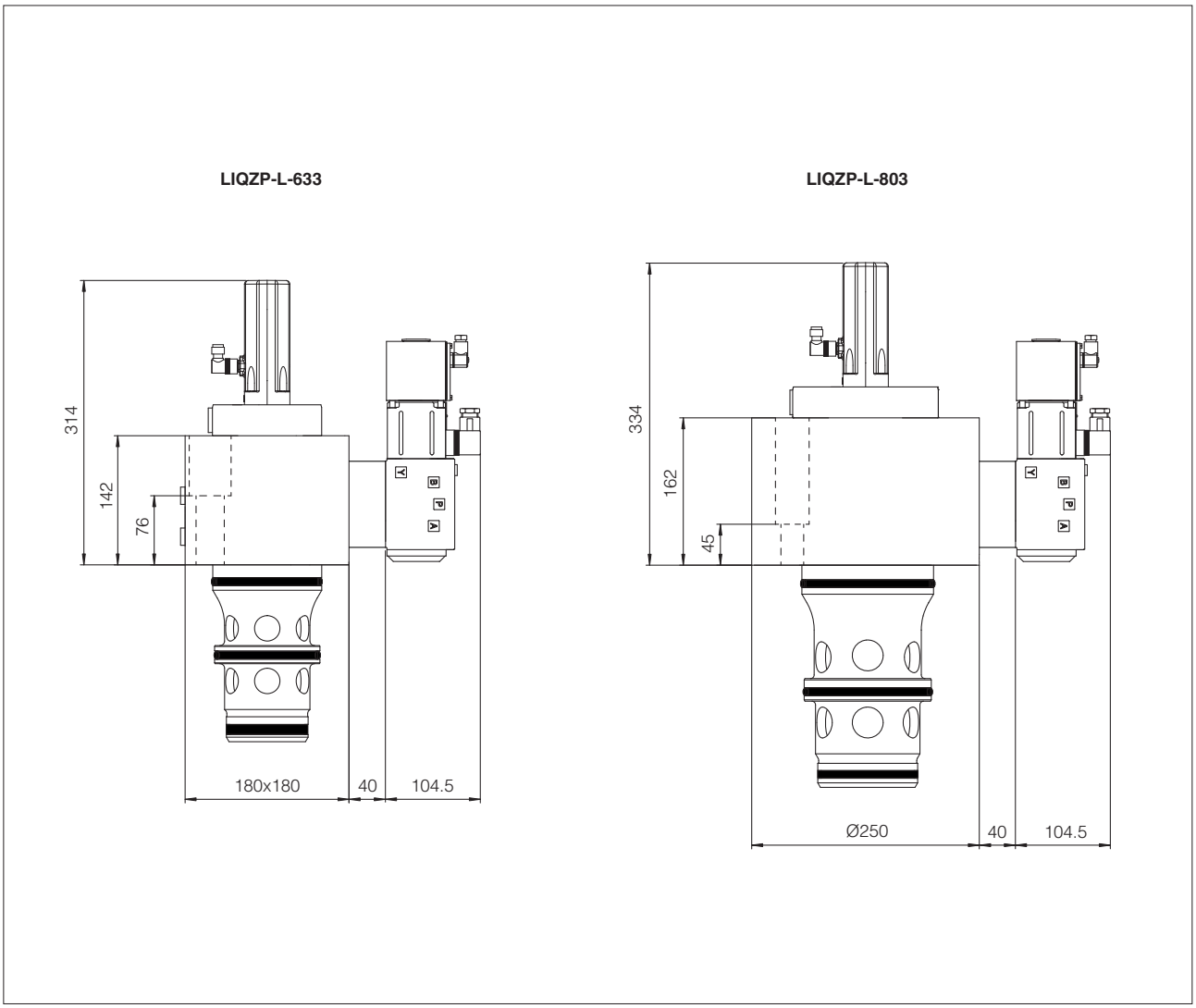

Note: for mounting surface and cavity dimensions, see table P006

13 RELATED DOCUMENTATION

FS001	Basics for digital electrohydraulics	**GS500**	Programming tools
FS900	Operating and maintenance information for proportional valves	**GS510**	Fieldbus
GS230	E-BM-LEB digital driver	**K800**	Electric and electronic connectors
GS240	E-BM-LES digital driver	**P006**	Mounting surfaces and cavities for cartridge valves

Digital proportional directional valves high performance

direct, with on-board driver, LVDT transducer and positive spool overlap

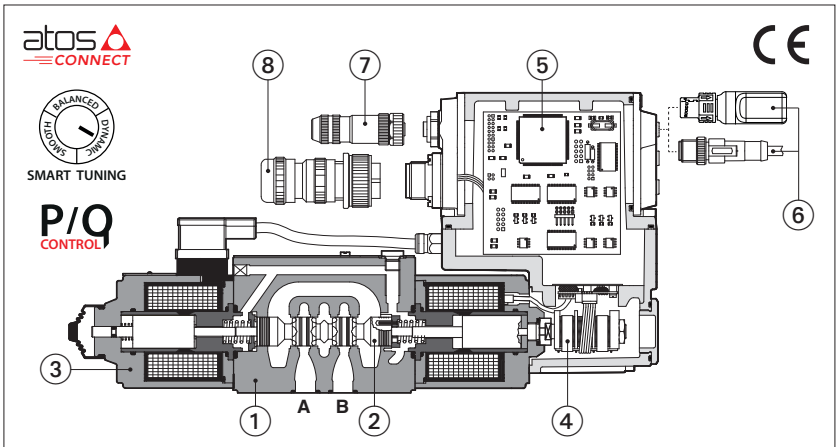

DKZOR-TES-SN-BC-171

① Valve body
② Spool
③ Proportional solenoid
④ LVDT transducer
⑤ On-board digital driver
⑥ Bluetooth/USB connection
⑦ Fieldbus connectors
⑧ Main connector

DHZO-TEB, DHZO-TES DKZOR-TEB, DKZOR-TES

Digital high performance directional proportional valves, direct, specifically designed for high speed closed loop controls.

They are equipped with LVDT position transducer and positive spool overlap for best dynamics in directional controls and not compensated flow regulations.

TEB basic execution with analog reference signal or IO-Link interface for digital reference signals, valve settings, and real-time diagnostics.

TES full execution which includes also optional alternated p/Q controls and fieldbus interfaces for digital reference signals, valve settings, and real-time diagnostics.

Bluetooth/USB connection is always present for valve settings via mobile App and Atos PC software.

DHZO:	**DKZOR**:
Size: **06** - ISO 4401	Size: **10** - ISO 4401
Max flow: **80 l/min**	Max flow: **180 l/min**
Max pressure: **350 bar**	Max pressure: **315 bar**

1 MODEL CODE

DHZO - TES - SN - NP - 0 71 - L 5 / * / * / * * / *

DHZO = size 06
DKZOR = size 10

TEB = basic on-board digital driver
TES = full on-board digital driver

Alternated p/Q controls, see section 9 :
SN = none
Only for TES:
SP = pressure control (1 pressure transducer)
SF = force control (2 pressure transducers)
SL = force control (1 load cell)

IO-Link interface, only for TEB, see section 7 :
NP = Not present **IL** = IO-Link

Fieldbus interfaces, only for TES, see section 8 :
NP = Not present
BC = CANopen **EW** = POWERLINK
BP = PROFIBUS DP **EI** = EtherNet/IP
EH = EtherCAT **EP** = PROFINET RT/IRT

Valve size ISO 4401: **0** = 06 **1** = 10

Configuration (1): **Standard** Option **/B**

51 =
53 =
71 =
72 = **(2)**
73 =

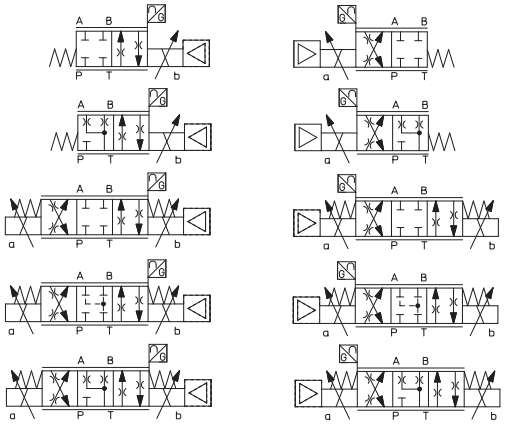

Series number

Seals material, see section 14 :
- = NBR
PE = FKM
BT = NBR low temperature

Safety options TÜV certified - only for TES **(3)**:
U = safe double power supply
K = safe on/off signals
See section 10

SAFETY CERTIFIED

Bluetooth option (3), see section 5 :
T = Bluetooth adapter supplied with the valve

Hydraulic options (3):
B = solenoid with on-board digital driver and LVDT transducer at side of port A
Y = external drain

Electronic options (3), not available for TEB-SN-IL:
C = current feedback for pressure transducer 4÷20mA (only for TES-SP, SF, SL)
F = fault signal
I = current reference input and monitor 4÷20mA
Q = enable signal
Z = double power supply (only for TES), enable, fault and monitor signals - 12 pin connector

Spool size:	**14** (L)	**1** (L)	**2** (S)	**3** (L,S,D)	**5** (L,S,D)
DHZO =	1	4,5	8	18	28
DKZOR =	-	-	-	45	75

Nominal flow (l/min) at Δp 10bar P-T (see section 12)

Spool type, regulating characteristics, see section 15 :
L = linear **S** = progressive **D** = differential-progressive
P-A = Q, B-T = Q/2
P-B = Q/2, A-T = Q

(1) For P/Q control select configuration 73 with spools L,S,D, or specific spools Q5, V9, see section 2
(2) Only for **DKZOR-*-S5**, see 15.8 **(3)** For possible combined options, see section 18

2 SPOOLS SPECIFIC FOR ALTERNATED p/Q CONTROL - for valve model code and options, see section 1

DHZO	-	TES	-	SP	-	NP	-	0	73 - V9	/	*	/	*	/	*	*	/	*

Configuration and spool:

73-Q5

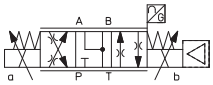

73-Q5/B

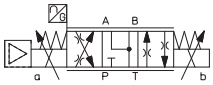

73-V9

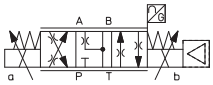

73-V9/B

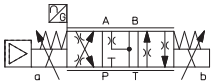

Spool type and size:		**Q5**	**V9**
DHZO	=	30	30
DKZOR	=	75	75

Nominal flow (l/min) at Δp 10 bar P-T

Q5

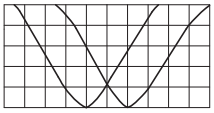

For alternated p/Q control
see 15.1 - diagram 16

V9

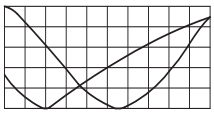

For alternated p/Q control of injection cycle in plastic machinery
see 15.1 - diagram 17

3 GENERAL NOTES

Atos digital proportionals valves are CE marked according to the applicable directives (e.g. Immunity and Emission EMC Directive).
Installation, wirings and start-up procedures must be performed according to the general prescriptions shown in tech table **FS900** and in the user manuals included in the E-SW-SETUP programming software.

4 VALVE SETTINGS AND PROGRAMMING TOOLS - see tech. table **GS500**

4.1 Atos CONNECT mobile App

Free downloadable App for smartphones and tablets which allows quick access to valve main functional parameters and basic diagnostic information via Bluetooth, thus avoiding physical cable connection and significantly reducing commissioning time.
Atos CONNECT supports Atos digital valve drivers equipped with E-A-BTH adapter or with built-in Bluetooth. It does not support valves with p/Q control or axis controls.

Download on the App Store

GET IT ON Google Play

4.2 E-SW-SETUP PC software

Free downloadable software for PC allows to set all valve functional parameters and to access complete diagnostic information of digital valve drivers via Bluetooth/USB service port.
Atos E-SW-SETUP PC software supports all Atos digital valve drivers and it is available at www.atos.com in MyAtos area.

WARNING: drivers USB port is not isolated! For E-C-SB-USB/M12 cable, the use of E-A-SB-USB/OPT isolator adapter is highly recommended for PC protection

Bluetooth or USB connection

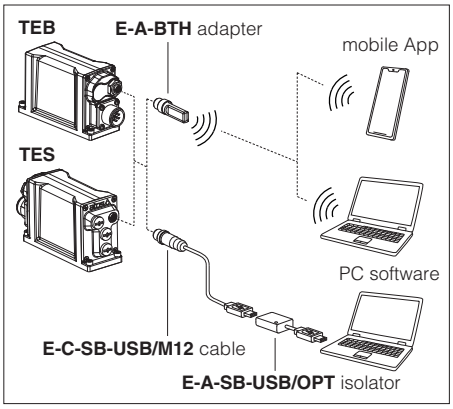

5 BLUETOOTH OPTION - see tech. table **GS500**

T option adds Bluetooth® connectivity to Atos valve drivers thanks to E-A-BTH adapter, which can be left permanently installed on-board, to allow the Bluetooth connection with the valve drivers at any time. E-A-BTH adapter can also be purchased separately and used to connect with any supported Atos digital product.
Bluetooth connection to the valve can be protected against unauthorised access by setting a personal password. The adapter leds visually indicates the status of valve driver and Bluetooth connection.

WARNING: for the list of countries where the Bluetooth adapter has been approved, see tech. table **GS500**
T option is not available for the Indian market, so the Bluetooth adapter must be ordered separately.

6 SMART TUNING

Smart tuning allows to adjust the valve dynamic response in order to match different performance requirements.

The valve is provided with 3 factory settings for the spool control:
- **dynamic** fast response time and high sensitivity for best dynamic performances. Default factory setting for directional valves
- **balanced** average response time and sensitivity suitable for major applications
- **smooth** attenuated response time and sensitivity to improve control stability in critical applications or in environments with electrical disturbances

Smart tuning setting can be switched from Dynamic (default) to Balanced or Smooth via software or fieldbus; if requested, performances can be further customized directly tuning each single control parameter. For details consult related manuals E-MAN-RI-* and Quickstart, see section 26.

For Response time and Bode diagrams see section 15.

7 IO-LINK - only for **TEB**, see tech. table **GS520**

IO-Link allows low cost digital communication between the valve and machine central unit. The valve is directly connected to a port of an IO-Link master (point-to-point connection) via low-cost unshielded cables for digital reference, diagnostic and settings. The IO-Link master works as a hub exchanging this information with the machine central unit via fieldbus.

8 FIELDBUS - only for **TES**, see tech. table **GS510**

Fieldbus allows valve direct communication with machine control unit for digital reference, valve diagnostics and settings. These execution allow to operate the valves through fieldbus or analog signals available on the main connector.

9 ALTERNATED p/Q CONTROLS - only for **TES**, see tech. table **FS500**

S* options add the closed loop control of pressure (**SP**) or force (**SF** and **SL**) to the basic functions of proportional directional valves flow regulation. A dedicated algorithm alternates pressure (force) depending on the actual hydraulic system conditions.
An additional connector is available for transducers to be interfaced to the valve's driver (1 pressure transducer for SP, 2 pressure transducers for SF or 1 load cell for SL). The alternated pressure control (SP) is possible only for specific installation conditions.
Main 12 pin connector is the same as /Z option plus two analog signals specific for the pressure (force) control.

10 SAFETY OPTIONS - only for **TES**

Atos range of proportional directional valves, provides functional safety options **/U** and **/K** , designed to accomplish a safety function, intended to reduce the risk in process control systems.

They are **TÜV certified** in compliance to **IEC 61508 up to SIL 3 and ISO 13849 up to category 4, PL e**

Safe double power supply, option **/U**: the driver has separate power supplies for logic and solenoids. The safe condition is reached by cutting the electrical supply to solenoids, while electronics remains active for monitoring functions and fieldbus communication, see tech table **FY100**

Safety function via on/off signals, option **/K**: upon a disable command, the driver checks the spool position and it provides an on/off acknowledgement signal only when the valve is in safe condition, see tech table **FY200**

11 GENERAL CHARACTERISTICS

Assembly position	Any position
Subplate surface finishing to ISO 4401	Acceptable roughness index: Ra ≤0,8, recommended Ra 0,4 – Flatness ratio 0,01/100
MTTFd valves according to EN ISO 13849	150 years, for futher details see technical table P007
Ambient temperature range	**Standard** = -20°C ÷ +60°C **/PE** option = -20°C ÷ +60°C **/BT** option = -40°C ÷ +60°C
Storage temperature range	**Standard** = -20°C ÷ +70°C **/PE** option = -20°C ÷ +70°C **/BT** option = -40°C ÷ +70°C
Surface protection	Zinc coating with black passivation, galvanic treatment (driver housing)
Corrosion resistance	Salt spray test (EN ISO 9227) > 200 h
Vibration resistance	See technical table G004
Compliance	CE according to EMC directive 2014/30/EU (Immunity: EN 61000-6-2; Emission: EN 61000-6-3) RoHS Directive 2011/65/EU as last update by 2015/863/EU REACH Regulation (EC) n°1907/2006

12 HYDRAULIC CHARACTERISTICS - based on mineral oil ISO VG 46 at 50 °C

Valve model		DHZO						DKZOR			
Pressure limits [bar]		ports **P**, **A**, **B** = 350; **T** = 210 (250 with external drain /Y) **Y** = 10						ports **P**, **A**, **B** = 315; **T** = 210 (250 with external drain /Y) **Y** = 10			
Configuration		**51, 53, 71, 73**					**73**	**51, 53, 71, 73**		**72**	**73**
Spool type and size	standard	**L14**	**L1**	**S2**	**L3,S3,D3**	**L5,S5,D5**		**L3,S3,D3**	**L5,S5,D5**	**S5**	
	p/Q						**Q5,V9**				**Q5,V9**
Nominal flow Δp P-T [l/min] **(1)**	Δp= 10 bar	1	4,5	8	18 **(4)**	28 **(4)**	30	45 **(4)**	75 **(4)**	75	75
	Δp= 30 bar	1,7	8	14	30 **(4)**	50 **(4)**	52	80 **(4)**	130 **(4)**	130	130
	Δp= 70 bar	2,6	12	21	45 **(4)**	75 **(4)**	80	120 **(4)**	170 **(4)**	170	170
	Max permissible flow **(2)**	4	18	30	50 **(4)**	80 **(4)**	80	130 **(4)**	180 **(4)**	180	180
Leakage [cm³/min]		<30 (at p = 100 bar); <135 (at p = 350 bar)						<80 (at p = 100 bar); <600 (at p = 315 bar)			
Response time **(3)** [ms]		≤ 15						≤ 20			
Hysteresis		≤ 0,2 [% of max regulation]									
Repeatibility		± 0,1 [% of max regulation]									
Thermal drift		zero point displacement < 1% at ΔT = 40°C									

(1) For different Δp, the max flow is in accordance to the diagrams in section 15.2
(2) See detailed diagrams in section 15.3
(3) 0-100% step signal
(4) For spool type D* the flow value is referred to single path P-A (A-T) at Δp/2 per control edge. The flow P-B (B-T) is 50% of P-A (A-T)

13 ELECTRICAL CHARACTERISTICS

Power supplies	Nominal : +24 VDC Rectified and filtered : VRMS = 20 ÷ 32 VMAX (ripple max 10 % VPP)				
Max power consumption	50 W				
Max. solenoid current	**DHZO** = 2,6 A **DKZOR** = 3 A				
Coil resistance R at 20°C	**DHZO** = 3 ÷ 3,3 Ω **DKZOR** = 3,8 ÷ 4,1 Ω				
Analog input signals	Voltage: range ±10 VDC (24 VMAX tolerant) Input impedance: Ri > 50 kΩ Current: range ±20 mA Input impedance: Ri = 500 Ω				
Monitor outputs	Output range: voltage ±10 VDC @ max 5 mA current ±20 mA @ max 500 Ω load resistance				
Enable input	Range: 0 ÷ 5 VDC (OFF state), 9 ÷ 24 VDC (ON state), 5 ÷ 9 VDC (not accepted); Input impedance: Ri > 10 kΩ				
Fault output	Output range: 0 ÷ 24 VDC (ON state > [power supply - 2 V] ; OFF state < 1 V) @ max 50 mA; external negative voltage not allowed (e.g. due to inductive loads)				
Pressure/Force transducer power supply (only for SP, SF, SL)	+24VDC @ max 100 mA (E-ATR-8 see tech table **GS465**)				
Alarms	Solenoid not connected/short circuit, cable break with current reference signal, over/under temperature, valve spool transducer malfunctions, alarms history storage function				
Insulation class	H (180°) Due to the occurring surface temperatures of the solenoid coils, the European standards ISO 13732-1 and EN982 must be taken into account				
Protection degree to DIN EN60529	IP66 / IP67 with mating connectors				
Duty factor	Continuous rating (ED=100%)				
Tropicalization	Tropical coating on electronics PCB				
Additional characteristics	Short circuit protection of solenoid's current supply; 3 leds for diagnostic (only for TES); spool position control (SN) or pressure/force control (SP, SF, SL) by P.I.D. with rapid solenoid switching; protection against reverse polarity of power supply				
Communication interface	USB Atos ASCII coding	IO-Link Interface and System Specification 1.1.3	CANopen EN50325-4 + DS408	PROFIBUS DP EN50170-2/IEC61158	EtherCAT POWERLINK EtherNet/IP PROFINET IO RT/IRT IEC 61158
Communication physical layer	not insulated USB 2.0 + USB OTG	SDCI class port B	optical insulated CAN ISO11898	optical insulated RS485	Fast Ethernet, insulated 100 Base TX
Recommended wiring cable	LiYCY shielded cables, see section 23				

Note: a maximum time of 800 ms (depending on communication type) has to be considered between the driver energizing with the 24 VDC power supply and when the valve is ready to operate. During this time the current to the valve coils is switched to zero.

14 SEALS AND HYDRAULIC FLUIDS - for other fluids not included in below table, consult our technical office

Seals, recommended fluid temperature	NBR seals (standard) = -20°C ÷ +60°C, with HFC hydraulic fluids = -20°C ÷ +50°C FKM seals (/PE option) = -20°C ÷ +80°C NBR low temp. seals (/BT option) = -40°C ÷ +60°C, with HFC hydraulic fluids = -20°C ÷ +50°C			
Recommended viscosity	20÷100 mm²/s - max allowed range 15 ÷ 380 mm²/s			
Max fluid contamination level — normal operation	ISO4406 class 18/16/13 NAS1638 class 7		see also filter section at www.atos.com or KTF catalog	
Max fluid contamination level — longer life	ISO4406 class 16/14/11 NAS1638 class 5			
Hydraulic fluid	**Suitable seals type**	**Classification**	**Ref. Standard**	
Mineral oils	NBR, FKM, NBR low temp.	HL, HLP, HLPD, HVLP, HVLPD	DIN 51524	
Flame resistant without water	FKM	HFDU, HFDR	ISO 12922	
Flame resistant with water	NBR, NBR low temp.	HFC		

15 DIAGRAMS - based on mineral oil ISO VG 46 at 50 °C

15.1 Regulation diagrams - values measure at Δp 30 bar P-T

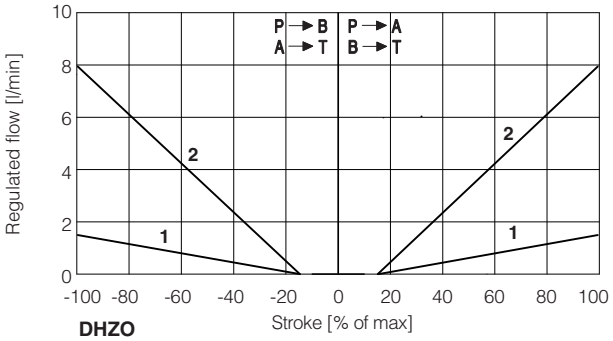

DHZO
1 = L14 **2** = L1

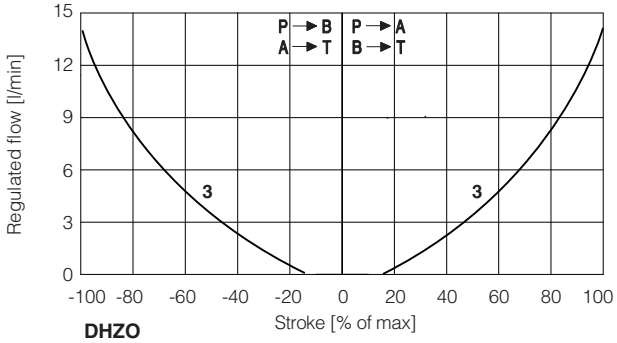

DHZO
3 = S2

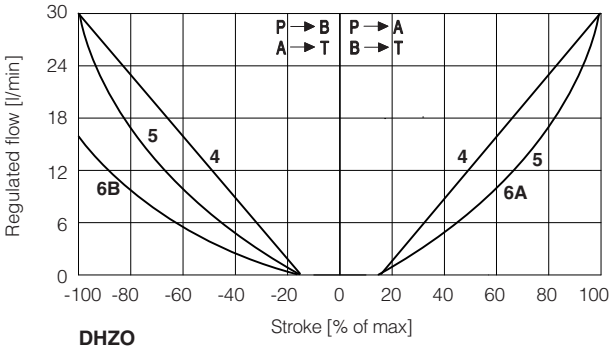

DHZO
4 = L3 **5** = S3 **6A** = D3 (P → A, A → T)
6B = D3 (P → B, B → T)

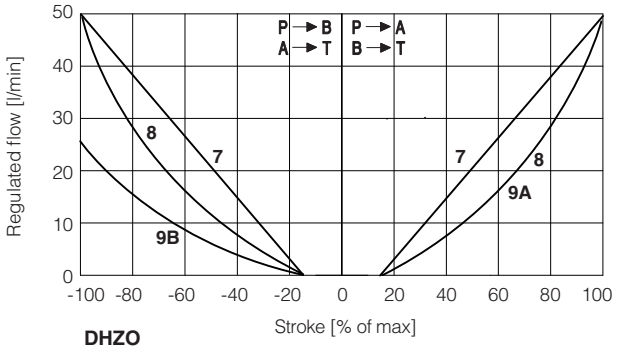

DHZO
7 = L5 **8** = S5 **9A** = D5 (P → A, A → T)
9B = D5 (P → B, B → T)

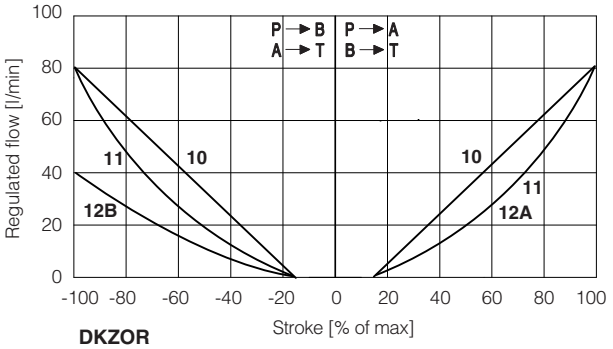

DKZOR
10 = L3 **11** = S3 **12A** = D3 (P → A, A → T)
12B = D3 (P → B, B → T)

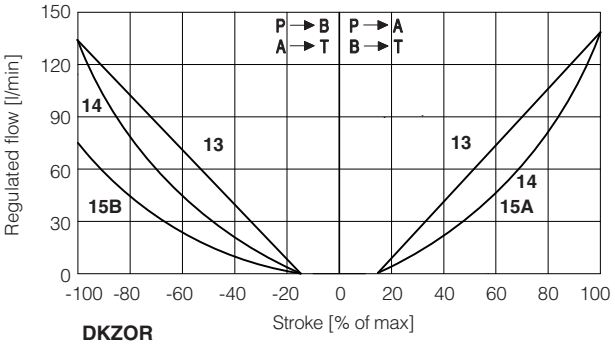

DKZOR
13 = L5 **14** = S5 **15A** = D5 (P → A, A → T)
15B = D5 (P → B, B → T)

Note:
Hydraulic configuration vs. reference signal for configurations 71, 72 and 73 (standard and option /B)

Reference signal $\left.\begin{matrix} 0 \div +10\ V \\ 12 \div 20\ mA \end{matrix}\right\}$ P → A / B → T Reference signal $\left.\begin{matrix} 0 \div -10\ V \\ 12 \div 4\ mA \end{matrix}\right\}$ P → B / A → T

16 = linear spool **Q5**

Q5 spool type is specific for alternate P/Q controls in combination with S* option of digital on-board drivers (see tech table **FS500**).
It allows to control the pressure in A port or B port and it provides a safety central position (A-T/B-T) to depressurize the actuator chambers.
The strong meter-in characteristic makes the spool suitable for both pressure control and motion regulations in several applications.

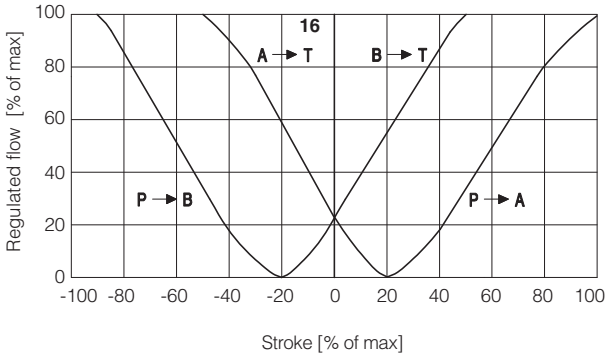

17 = differential - progressive spool **V9**

V9 spool type is specific for alternate P/Q controls in combination with S* option of digital on-board drivers (see tech table **FS500**).
This spool is specially designed to manage the whole injection cycle in plastic machinery, thanks to the following specific features:
- strong meter-in characteristic to allow the pressure control in A port during the holding pressure (P-A) and the plasticizing (A-T) phases
- safety central position (A-T/B-T) to depressurize the actuator chambers
- large A-T and B-T flow capability, required during the plasticizing phase, to discharge big volumes from high differential injection cylinders with low pressure drops and permitting the contemporary oil suction from tank

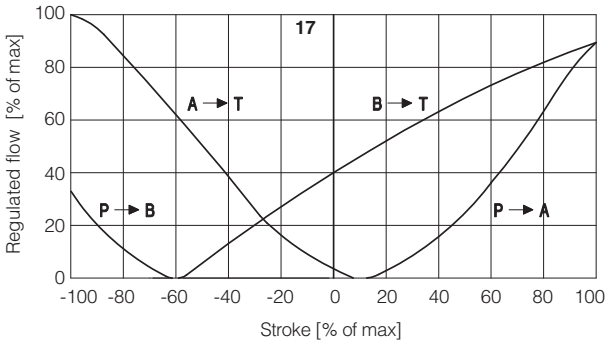

15.2 Flow /Δp diagrams
stated at 100% of valve stroke

DHZO

1 = spool L14
2 = spool L1
3 = spool S2
4 = spool L3, S3, D3
5 = spool L5, S5, D5, V9

DKZOR

6 = spool S3, L3, D3
7 = spool S5, L5, D5, V9

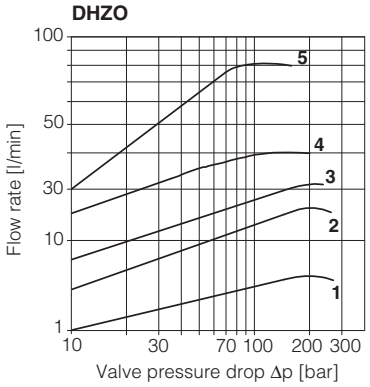

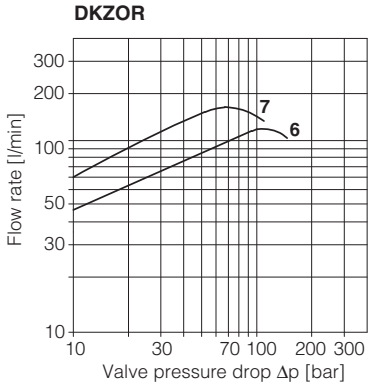

15.3 Operating limits

DHZO

1 = spool L14
2 = spool L1
3 = spool S2
4 = spool L3, S3, D3
5 = spool L5, S5, D5, V9

DKZOR

6 = spool S3, L3, D3
7 = spool S5, L5, D5, V9

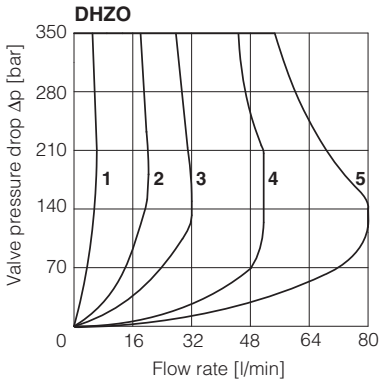

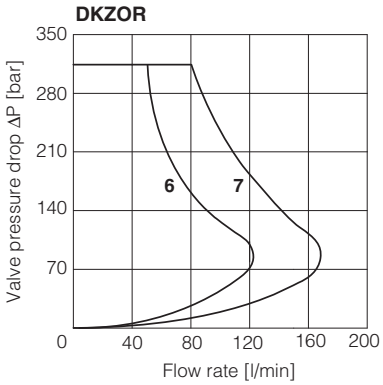

15.4 Response time

The response times in below diagrams are measured at different steps of the reference input signal. They have to be considered as average values.

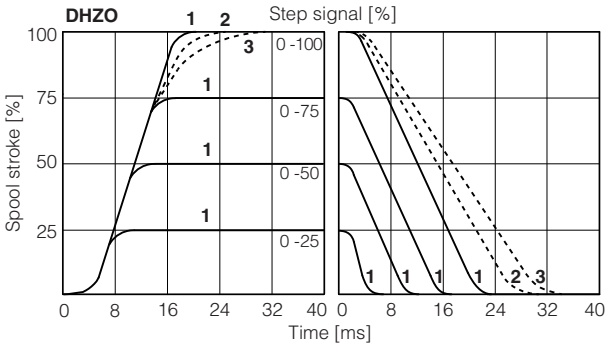

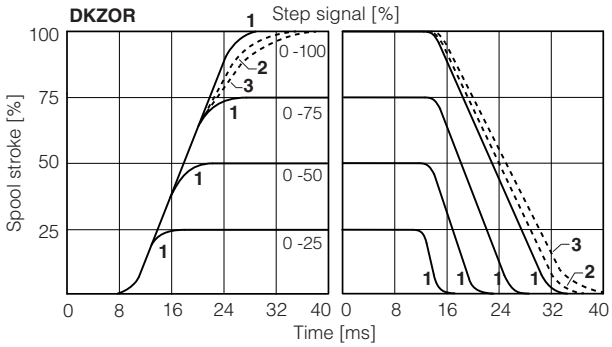

1 = dynamic **2** = balanced (*) **3** = smooth (*)

(*) Response time is represented only for 0-100% step; for intermediate steps, the response time increment of presets 2 (balanced) and 3 (smooth) with respect to the preset 1 (dynamic) is proportional to the step amplitude of the reference input signal

15.5 DHZO Bode diagrams

Stated at nominal hydraulic conditions

50% ± 5% nominal stroke:
1 = dynamic
2 = balanced
3 = smooth

10% ⟷ 90% nominal stroke:
4 = dynamic
5 = balanced
6 = smooth

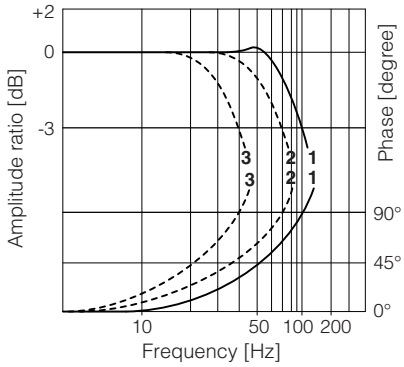

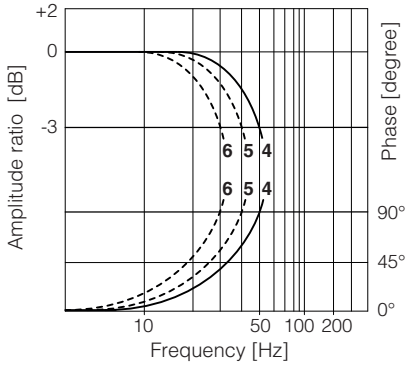

15.6 DKZOR Bode diagrams

Stated at nominal hydraulic conditions

50% ±5% nominal stroke:
1 = dynamic
2 = balanced
3 = smooth

10% ⟷ 90% nominal stroke:
4 = dynamic
5 = balanced
6 = smooth

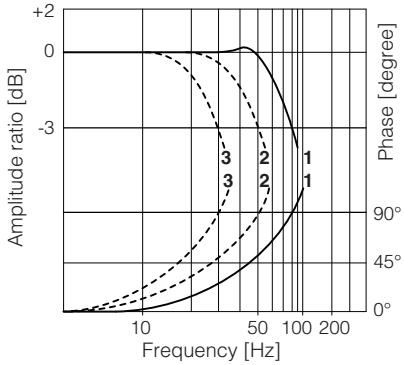

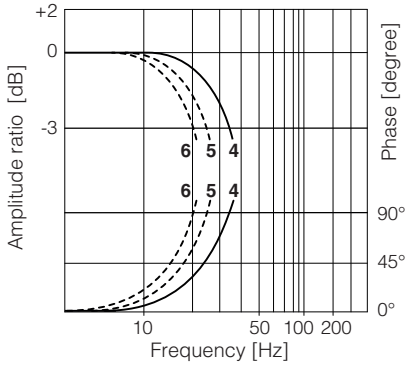

15.7 Operation as throttle valve

Single solenoid valves configuration 51 and 53 can be used as simple throttle valves:
Pmax = 250 bar (option /Y advisable)

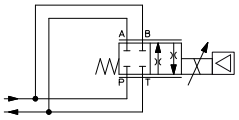

Max flow Δp= 15 bar [l/min]	Spool type and size				
	L14	**L1**	**S2**	**L3 S3**	**L5 S5**
DHZO	4	16	28	60	100
DKZOR	-	-	-	160	260

15.8 Configuration 72

Only for **DKZOR-*-S5** the spool overlapping type 2 provides the same characteristic of type 1, but in central position the internal leakages from P to A and B are drained to tank, avoiding the drift of cylinders with differential areas.

16 HYDRAULIC OPTIONS

B = Solenoid, on-board digital driver and position transducer at side of port A of the main stage. For hydraulic configuration vs reference signal, see 15.1

Y = This option is mandatory if the pressure in port T exceeds 210 bar.

17 ELECTRONIC OPTIONS - not available for TEB-SN-IL

F = This option permits to monitor the eventual fault condition of the driver, as for example the solenoid short circuit/not connected, reference signal cable broken for option /I, spool position transducer broken, etc. - see 19.9 for signal specifications.

I = This option provides 4 ÷ 20 mA current reference and monitor signals, instead of the standard ±10 VDC.
Input signal can be reconfigured via software selecting between voltage and current, within a maximum range of ±10 VDC or ±20 mA.
It is normally used in case of long distance between the machine control unit and the valve or where the reference signal can be affected by electrical noise; the valve functioning is disabled in case of reference signal cable breakage.

Q = This option permits to inhibit the valve function without removing the power supply to the driver. Upon disable command the current to the solenoid is zeroed and the valve's spool moves to rest position.
The option /Q is suggested for all cases where the valve has to be frequently inhibited during the machine cycle – see 19.7 for signal specifications.

Z = This option provides, on the 12 pin main connector, the following additional features:
Fault output signal - see above option **/F**
Enable input signal - see above option **/Q**
Repeat enable output signal - only for **TEB-SN-NP** (see 19.8)
Power supply for driver's logics and communication - only for **TES** (see 19.2)

C = This option is available to connect pressure (force) transducers with 4 ÷ 20 mA current output signal, instead of the standard ±10 VDC.
Input signal can be reconfigured via software selecting between voltage and current, within a maximum range of ±10 VDC or ±20 mA.

18 POSSIBLE COMBINED OPTIONS

Standard versions for **TEB-SN-NP** and **TES-SN**:
/BF, /BFI, /BFIY, /BFY, /BI, /BIQ, /BIQY, /BIY, /BIYZ, /BIZ, /BQ,
/BQY /BY, /BYZ, /BZ,
/FI, /FIY, /FY,
/IQ, /IQY, /IY, /IYZ, /IZ,
/QY, /YZ

Standard versions for **TEB-SN-IL**:
/BY

Standard versions for **TES-SP, SF, SL**:
/BC, /BCI, /BCIY, /BCY, /BI, /BIY, /BY,
/CI, /CIY, /CY, /IY

Safety certified versions for **TES-SN**:
/BI/U, /BIY/U, /B/U, /BY/U, /I/U, /IY/U, /Y/U
/BI/K, /BIY/K, /B/K, /BY/K, /I/K, /IY/K, /Y/K

Safety certified versions for **TES-SP, SF, SL**:
/BC/U, /BCI/U, /BCIY/U, /BCY/U, /BI/U, /BIY/U, /B/U, /BY/U,
/C/U, /CI/U, /CIY/U, /CY/U, /I/U, /IY/U, /Y/U
/BC/K, /BCI/K, /BCIY/K, /BCY/K, /BI/K, /BIY/K, /B/K, /BY/K,
/C/K, /CI/K, /CIY/K, /CY/K, /I/K, /IY/K, /Y/K

Note: **/T** Bluetooth adapter option can be combined with all other options

19 POWER SUPPLY AND SIGNALS SPECIFICATIONS

Generic electrical output signals of the valve (e.g. fault or monitor signals) must not be directly used to activate safety functions, like to switch-ON/OFF the machine's safety components, as prescribed by the European standards (Safety requirements of fluid technology systems and components-hydraulics, ISO 4413).

For **TEB-SN-IL** signals see section 20
For certified safety options: **/U** see tech. table **FY100** and **/K** see tech. table **FY200**

19.1 Power supply (V+ and V0)

The power supply must be appropriately stabilized or rectified and filtered: apply at least a 10000 µF/40 V capacitance to single phase rectifiers or a 4700 µF/40 V capacitance to three phase rectifiers. In case of separate power supply see 19.2.

⚠ A safety fuse is required in series to each power supply: 2,5 A time lag fuse.

19.2 Power supply for driver's logic and communication (VL+ and VL0) - only for **TES** with **/Z** option and for **TES-SP, SF, SL** with fieldbus

The power supply for driver's logic and communication must be appropriately stabilized or rectified and filtered: apply at least a 10000 µF/40 V capacitance to single phase rectifiers or a 4700 µF/40 V capacitance to three phase rectifiers.
The separate power supply for driver's logic on pin 9 and 10, allow to remove solenoid power supply from pin 1 and 2 maintaining active the diagnostics, USB and fieldbus communications.

⚠ A safety fuse is required in series to each driver's logic and communication power supply: 500 mA fast fuse.

19.3 Flow reference input signal (Q_INPUT+)

The driver controls in closed loop the valve spool position proportionally to the external reference input signal.
Reference input signal is factory preset according to selected valve code, defaults are ±10 VDC for standard and 4 ÷ 20 mA for /I option.
Input signal can be reconfigured via software selecting between voltage and current, within a maximum range of ±10 VDC or ± 20 mA.
Drivers with fieldbus interface can be software set to receive reference signal directly from the machine control unit (fieldbus reference).
Analog reference input signal can be used as on-off commands with input range 0 ÷ 24VDC.

19.4 Pressure or force reference input signal (F_INPUT+) - only for **TES-SP, SF, SL**

Functionality of F_INPUT+ signal (pin 7), is used as reference for the driver pressure/force closed loop (see tech. table **FS500**).
Reference input signal is factory preset according to selected valve code, defaults are ±10 VDC for standard and 4 ÷ 20 mA for /I option.
Input signal can be reconfigured via software selecting between voltage and current, within a maximum range of ±10 VDC or ± 20 mA.
Drivers with fieldbus interface can be software set to receive reference signal directly by the machine control unit (fieldbus reference).
Analog reference input signal can be used as on-off commands with input range 0 ÷ 24VDC.

19.5 Flow monitor output signal (Q_MONITOR) - not for **/F**

The driver generates an analog output signal proportional to the actual spool position of the valve; the monitor output signal can be software set to show other signals available in the driver (e.g. analog reference, fieldbus reference, pilot spool position).
Monitor output signal is factory preset according to selected valve code, defaults are ±10 VDC for standard and 4 ÷ 20 mA for /I option.
Output signal can be reconfigured via software selecting between voltage and current, within a maximum range of ±10 VDC or ± 20 mA.

19.6 Pressure or force monitor output signal (F_MONITOR) - only for **TES-SP, SF, SL**

The driver generates an analog output signal proportional to alternated pressure/force control; the monitor output signal can be software set to show other signals available in the driver (e.g. analog reference, force reference).
Monitor output signal is factory preset according to selected valve code, defaults are ±10 VDC for standard and 4 ÷ 20 mA for /I option.
Output signal can be reconfigured via software selecting between voltage and current, within a maximum range of ±10 VDC or ± 20 mA.

19.7 Enable input signal (ENABLE) - not for standard and **/F**

To enable the driver, supply a 24 VDC on pin 3 (pin C): Enable input signal allows to enable/disable the current supply to the solenoid, without removing the electrical power supply to the driver; it is used to active the communication and the other driver functions when the valve must be disabled for safety reasons. This condition **does not comply** with norms IEC 61508 and ISO 13849.
Enable input signal can be used as generic digital input by software selection.

19.8 Repeat enable output signal (R_ENABLE) - only for **TEB-SN-NP** with **/Z** option

Repeat enable is used as output repeater signal of enable input signal (see 19.7).

19.9 Fault output signal (FAULT) - not for standard and **/Q**

Fault output signal indicates fault conditions of the driver (solenoid short circuits/not connected, reference signal cable broken for 4 ÷ 20 mA input, spool position transducer cable broken, etc.). Fault presence corresponds to 0 VDC, normal working corresponds to 24 VDC.
Fault status is not affected by the Enable input signal. Fault output signal can be used as digital output by software selection.

19.10 Remote pressure/force transducer input signal - only for **TES-SP, SF, SL**

Analog remote pressure transducers or load cell can be directly connected to the driver (see 21.5).
Analog input signal is factory preset according to selected valve code, defaults are ±10 VDC for standard and 4 ÷ 20 mA for /C option.
Input signal can be reconfigured via software selecting between voltage and current, within a maximum range of ±10 VDC or ± 20 mA.
Refer to pressure/force transducer characteristics to select the transducer type according to specific application requirements (see tech table **FS500**).

19.11 Multiple PID selection (D_IN0 and D_IN1) - only **NP** execution for **TES-SP, SF, SL**

Two on-off input signals are available on the main connector to select one of the four pressure (force) PID parameters setting, stored into the driver.
Switching the active setting of pressure PID during the machine cycle allows to optimize the system dynamic response in different hydraulic working conditions (volume, flow, etc.).
Supply a 24 VDC or a 0 VDC on pin 9 and/or pin 10, to select one of the PID settings as indicated by binary code table at side. Gray code can be selected by software.

	PID SET SELECTION			
PIN	SET 1	SET 2	SET 3	SET 4
9	0	24 VDC	0	24 VDC
10	0	0	24 VDC	24 VDC

20 IO-LINK SIGNALS SPECIFICATIONS - only for **TEB-SN-IL**

20.1 Power supply for IO-Link communication (L+ and L-)

The IO-Link master provides dedicated 24 VDC power supply for IO-Link communication.
Maximum power consumption: 2 W
Internal electrical isolation of power L+, L- from P24, N24

20.2 Power supply for driver's logic and valve regulation (P24 and N24)

The IO-Link master provides dedicated 24 VDC power supply for valve regulation, logics and diagnostics.
Maximum power consumption: 50 W
Internal electrical isolation of power P24, N24 from L+, L-

20.3 IO-Link data line (C/Q)

C/Q signal is used to establish communication between IO-Link master and valve.

21 ELECTRONIC CONNECTIONS

For electronic connection of certified safety options **/U** see tech. table **FY100** and **/K** see tech. table **FY200**

21.1 Main connector signals - 7 pin (A1) **Standard**, **/Q** and **/F** options

PIN	Standard	/Q	/F	TECHNICAL SPECIFICATIONS	NOTES
A	**V+**			Power supply 24 VDC	Input - power supply
B	**V0**			Power supply 0 VDC	Gnd - power supply
C	**AGND**		**AGND**	Analog ground	Gnd - analog signal
		ENABLE		Enable (24 VDC) or disable (0 VDC) the valve, referred to V0	Input - on/off signal
D	**Q_INPUT+**			Flow reference input signal: ±10 VDC / ±20 mA maximum range Defaults are ±10 VDC for standard and 4 ÷ 20 mA for /I option	Input - analog signal **Software selectable**
E	**INPUT-**			Negative reference input signal for Q_INPUT+	Input - analog signal
F	**Q_MONITOR** referred to: AGND V0			Flow monitor output signal: ±10 VDC / ±20 mA maximum range Defaults are ±10 VDC for standard and 4 ÷ 20 mA for /I option	Output - analog signal **Software selectable**
			FAULT	Fault (0 VDC) or normal working (24 VDC)	Output - on/off signal
G	**EARTH**			Internally connected to the driver housing	

21.2 Main connector signals - 12 pin (A2) **/Z** option and **TES-SP, SF, SL**

PIN	TEB-SN /Z	TES-SN /Z	TES-SP, SF, SL Fieldbus	TES-SP, SF, SL NP	TECHNICAL SPECIFICATIONS	NOTES
1	**V+**				Power supply 24 VDC	Input - power supply
2	**V0**				Power supply 0 VDC	Gnd - power supply
3	**ENABLE** referred to: V0	VL0	VL0	V0	Enable (24 VDC) or disable (0 VDC) the valve	Input - on/off signal
4	**Q_INPUT+**				Flow reference input signal: ±10 VDC / ±20 mA maximum range Defaults are ±10 VDC for standard and 4 ÷ 20 mA for /I option	Input - analog signal **Software selectable**
5	**INPUT-**				Negative reference input signal for Q_INPUT+ and F_INPUT+	Input - analog signal
6	**Q_MONITOR** referred to: AGND	VL0	VL0	V0	Flow monitor output signal: ±10 VDC / ±20 mA maximum range Defaults are ±10 VDC for standard and 4 ÷ 20 mA for /I option	Output - analog signal **Software selectable**
7	**AGND**				Analog ground	Gnd - analog signal
		NC			Do not connect	
			F_INPUT+		Pressure/Force reference input signal: ±10 VDC / ±20 mA maximum range Defaults are ±10 VDC for standard and 4 ÷ 20 mA for /I option	Input - analog signal **Software selectable**
8	**R_ENABLE**				Repeat enable, output repeater signal of enable input, referred to V0	Output - on/off signal
		NC			Do not connect	
			F_MONITOR referred to: VL0	V0	Pressure/Force monitor output signal: ±10 VDC / ±20 mA maximum range Defaults are ±10 VDC for standard and 4 ÷ 20 mA for /I option	Output - analog signal **Software selectable**
9	**NC**				Do not connect	
		VL+			Power supply 24 VDC for driver's logic and communication	Input - power supply
				D_IN0	Multiple pressure/force PID selection, referred to V0	Input - on/off signal
10	**NC**				Do not connect	
		VL0			Power supply 0 VDC for driver's logic and communication	Gnd - power supply
				D_IN1	Multiple pressure/force PID selection (not available for SF), referred to V0	Input - on/off signal
11	**FAULT** referred to: V0	VL0	VL0	V0	Fault (0 VDC) or normal working (24 VDC)	Output - on/off signal
PE	**EARTH**				Internally connected to the driver housing	

Note: do not disconnect VL0 before VL+ when the driver is connected to PC USB port

21.3 IO-Link connector signals - M12 - 5 pin - Coding A, port class B (A) only for **TEB-SN-IL**

PIN	SIGNAL	TECHNICAL SPECIFICATIONS	NOTES
1	**L+**	Power supply 24 VDC for IO-Link communication	Input - power supply
2	**P24**	Power supply 24 VDC for valve regulation, logics and diagnostics	Input - power supply
3	**L-**	Power supply 0 VDC for IO-Link communication	Gnd - power supply
4	**C/Q**	IO-Link data line	Input / Output - signal
5	**N24**	Power supply 0 VDC for valve regulation, logics and diagnostics	Gnd - power supply

Note: L+, L- and P24, N24 are electrically isolated

21.4 Communications connectors (B) - (C)

(B) **USB connector - M12 - 5 pin** always present		
PIN	**SIGNAL**	**TECHNICAL SPECIFICATION** (1)
1	**+5V_USB**	Power supply
2	**ID**	Identification
3	**GND_USB**	Signal zero data line
4	**D-**	Data line -
5	**D+**	Data line +

(C1) (C2) **BC fieldbus execution, connector - M12 - 5 pin**		
PIN	**SIGNAL**	**TECHNICAL SPECIFICATION** (1)
1	**CAN_SHLD**	Shield
2	**not used**	(C1) - (C2) pass-through connection (2)
3	**CAN_GND**	Signal zero data line
4	**CAN_H**	Bus line (high)
5	**CAN_L**	Bus line (low)

(C1) (C2) **BP fieldbus execution, connector - M12 - 5 pin**		
PIN	**SIGNAL**	**TECHNICAL SPECIFICATION** (1)
1	**+5V**	Termination supply signal
2	**LINE-A**	Bus line (high)
3	**DGND**	Data line and termination signal zero
4	**LINE-B**	Bus line (low)
5	**SHIELD**	

(C1) (C2) **EH, EW, EI, EP fieldbus execution, connector - M12 - 4 pin**		
PIN	**SIGNAL**	**TECHNICAL SPECIFICATION** (1)
1	**TX+**	Transmitter
2	**RX+**	Receiver
3	**TX-**	Transmitter
4	**RX-**	Receiver
Housing	**SHIELD**	

(1) Shield connection on connector's housing is recommended

(2) Pin 2 can be fed with external +5V supply of CAN interface

21.5 Remote pressure/force transducer connector - M12 - 5 pin - only for **SP, SF, SL** (D)

PIN	SIGNAL	TECHNICAL SPECIFICATION	NOTES	(D1) **SP, SL - Single transducer** (1)		(D2) **SF - Double transducers** (1)	
				Voltage	**Current**	**Voltage**	**Current**
1	**VF +24V**	Power supply +24VDC	Output - power supply	Connect	Connect	Connect	Connect
2	**TR1**	1st signal transducer: ±10 VDC / ±20 mA maximum range	Input - analog signal **Software selectable**	Connect	Connect	Connect	Connect
3	**AGND**	Common gnd for transducer power and signals	Common gnd	Connect	/	Connect	/
4	**TR2**	2nd signal transducer: ±10 VDC / ±20 mA maximum range	Input - analog signal **Software selectable**	/	/	Connect	Connect
5	**NC**	Not connect		/	/	/	/

(1) Single/double transducer configuration is software selectable

Remote pressure transducers connection - example

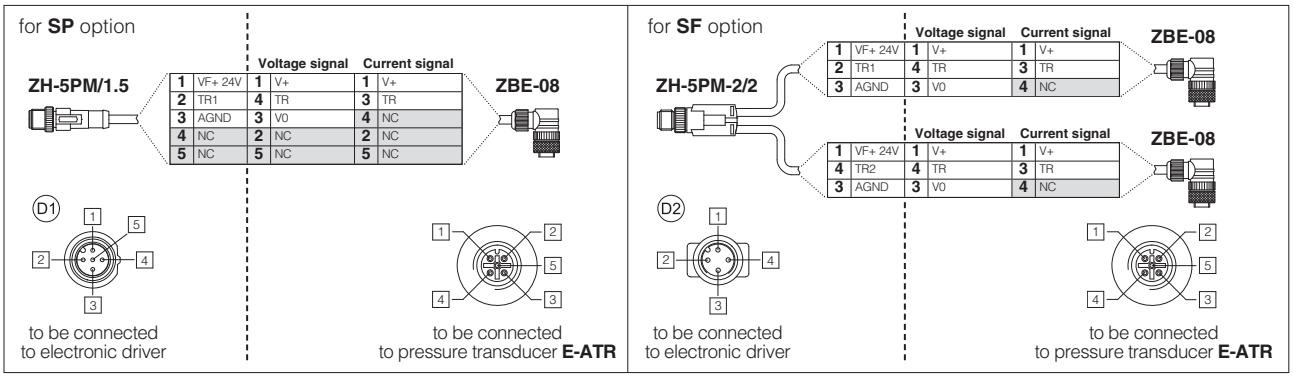

Note: pin layout always referred to driver's view

21.6 TEB-SN-NP connections layout

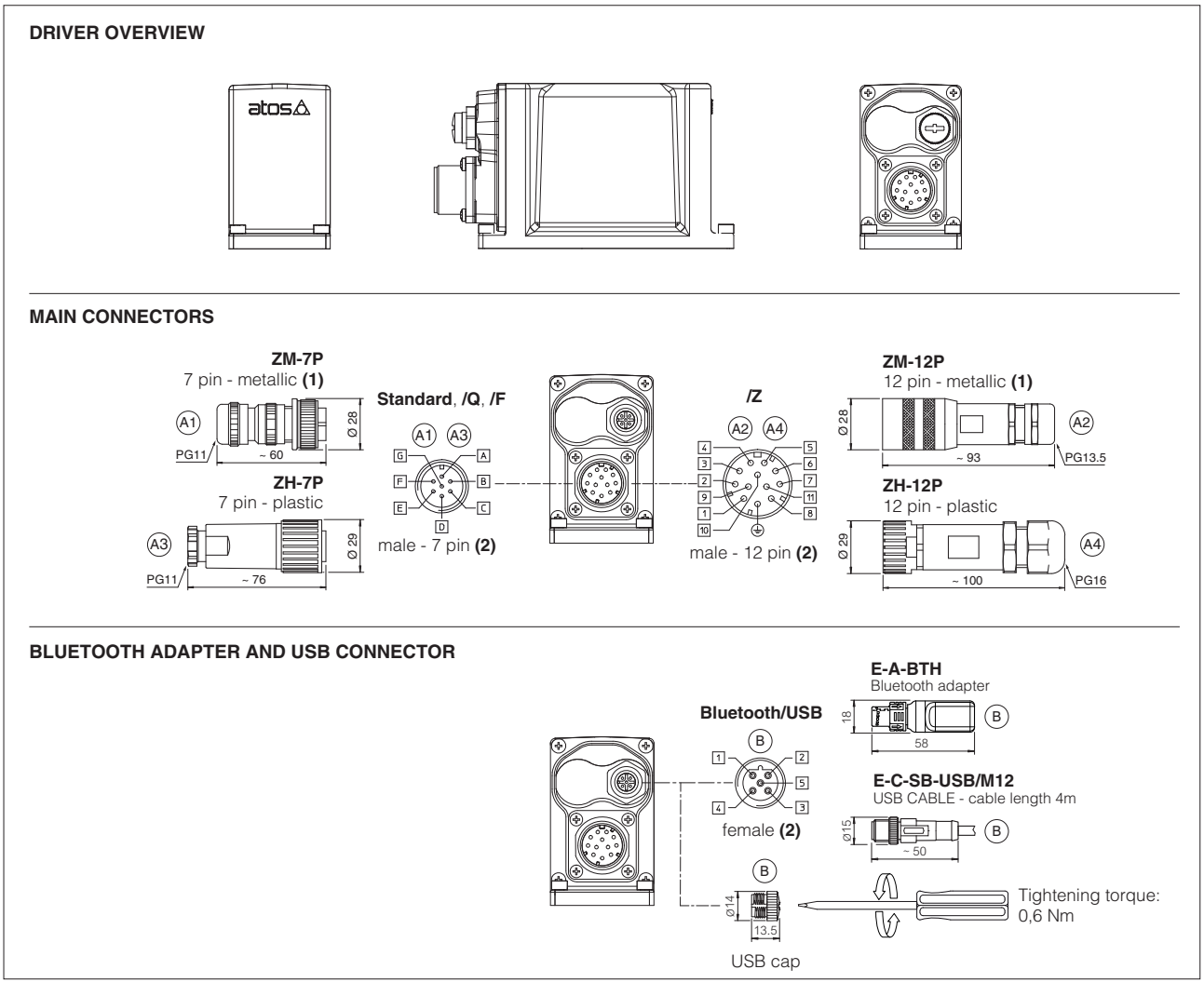

(1) Use of metallic connectors is strongly recommended in order to fulfill EMC requirements **(2)** Pin layout always referred to driver's view

21.7 TEB-SN-IL connections layout

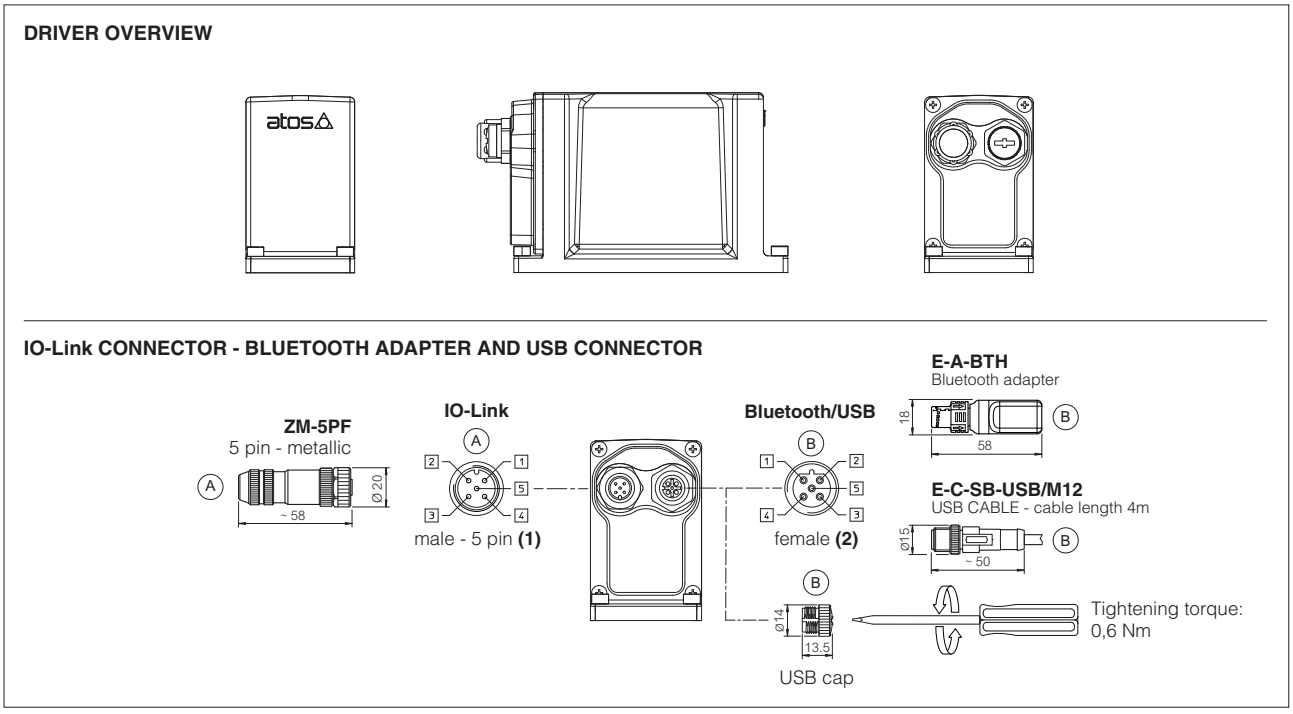

(1) Pin layout always referred to driver's view

21.8 TES connections layout

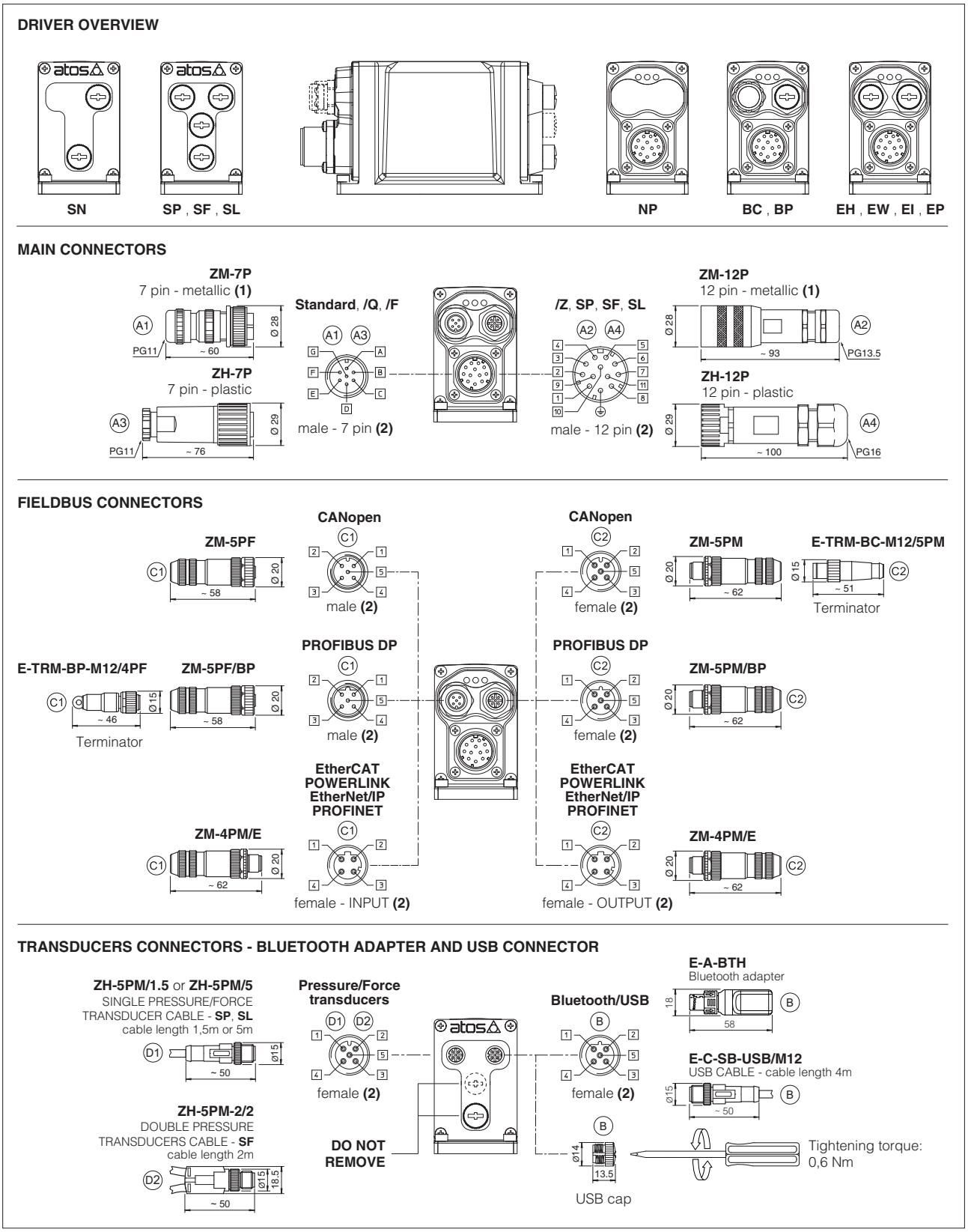

(1) Use of metallic connectors is strongly recommended in order to fulfill EMC requirements **(2)** Pin layout always referred to driver's view

21.9 Diagnostic LEDs - only for **TES**

Three leds show driver operative conditions for immediate basic diagnostics. Please refer to the driver user manual for detailed information.

FIELDBUS / LEDS	NP Not Present	BC CANopen	BP PROFIBUS DP	EH EtherCAT	EW POWERLINK	EI EtherNet/IP	EP PROFINET
L1	VALVE STATUS			LINK/ACT			
L2	NETWORK STATUS			NETWORK STATUS			
L3	SOLENOID STATUS			LINK/ACT			

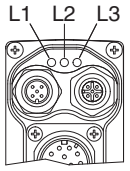

22 IN / OUT FIELDBUS COMMUNICATION CONNECTORS

Two fieldbus communication connectors are always available for digital drivers executions BC, BP, EH, EW, EI, EP. This features allows considerable technical advantages in terms of installation simplicity, wirings reduction and also avoid the usage expensive T-connectors.
For BC and BP executions the fieldbus connectors have an internal pass-through connection and can be used like end point of the fieldbus network, using an external terminator (see tech table **GS500**).
For EH, EW, EI and EP executions the external terminators are not required: each connector is internally terminated.

BC and BP pass-through connection

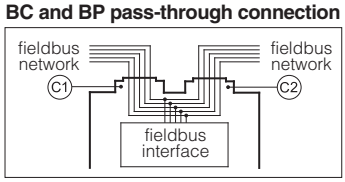

23 CONNECTORS CHARACTERISTICS - to be ordered separately

23.1 Main connectors - 7 pin

CONNECTOR TYPE	POWER SUPPLY AND SIGNALS	POWER SUPPLY AND SIGNALS
CODE	A1 ZM-7P	A3 ZH-7P
Type	7pin female straight circular	7pin female straight circular
Standard	According to MIL-C-5015	According to MIL-C-5015
Material	Metallic	Plastic reinforced with fiber glass
Cable gland	PG11	PG11
Recommended cable	LiYCY 7 x 0,75 mm² max 20 m (logic and power supply) or LiYCY 7 x 1 mm² max 40 m (logic and power supply)	LiYCY 7 x 0,75 mm² max 20 m (logic and power supply) or LiYCY 7 x 1 mm² max 40 m (logic and power supply)
Conductor size	up to 1 mm² - available for 7 wires	up to 1 mm² - available for 7 wires
Connection type	to solder	to solder
Protection (EN 60529)	IP 67	IP 67

23.2 Main connectors - 12 pin

CONNECTOR TYPE	POWER SUPPLY AND SIGNALS	POWER SUPPLY AND SIGNALS
CODE	A2 ZM-12P	A4 ZH-12P
Type	12pin female straight circular	12pin female straight circular
Standard	DIN 43651	DIN 43651
Material	Metallic	Plastic reinforced with fiber glass
Cable gland	PG13,5	PG16
Recommended cable	LiYCY 12 x 0,75 mm² max 20 m (logic and power supply)	LiYCY 10 x 0,14mm² max 40 m (logic) LiYY 3 x 1mm² max 40 m (power supply)
Conductor size	0,5 mm² to 1,5 mm² - available for 12 wires	0,14 mm² to 0,5 mm² - available for 9 wires 0,5 mm² to 1,5 mm² - available for 3 wires
Connection type	to crimp	to crimp
Protection (EN 60529)	IP 67	IP 67

23.3 IO-Link connector - only for **TEB-SN-IL**

CONNECTOR TYPE	IL IO-Link
CODE	A ZM-5PF
Type	5pin female straight circular
Standard	M12 coding A – IEC 61076-2-101
Material	Metallic
Cable gland	Pressure nut - cable diameter 6÷8 mm
Recommended cable	5 x 0,75 mm² max 20 m
Connection type	screw terminal
Protection (EN 60529)	IP 67

23.4 Fieldbus communication connectors

CONNECTOR TYPE	BC CANopen (1)		BP PROFIBUS DP (1)		EH EtherCAT, EW POWERLINK, EI EtherNet/IP, EP PROFINET (2)
CODE	C1 ZM-5PF	C2 ZM-5PM	C1 ZM-5PF/BP	C2 ZM-5PM/BP	C1 C2 ZM-4PM/E
Type	5 pin female straight circular	5 pin male straight circular	5 pin female straight circular	5 pin male straight circular	4 pin male straight circular
Standard	M12 coding A – IEC 61076-2-101		M12 coding B – IEC 61076-2-101		M12 coding D – IEC 61076-2-101
Material	Metallic		Metallic		Metallic
Cable gland	Pressure nut - cable diameter 6÷8 mm		Pressure nut - cable diameter 6÷8 mm		Pressure nut - cable diameter 4÷8 mm
Cable	CANbus Standard (DR 303-1)		PROFIBUS DP Standard		Ethernet standard CAT-5
Connection type	screw terminal		screw terminal		terminal block
Protection (EN 60529)	IP67		IP 67		IP 67

(1) E-TRM-** terminators can be ordered separately - see tech table **GS500**

(2) Internally terminated

23.5 Remote pressure/Force transducer connectors - only for **SP, SF, SL**

CONNECTOR TYPE	SP, SL - Single transducer		SF - Double transducers
CODE	D1 ZH-5PM/1.5	D1 ZH-5PM/5	D2 ZH-5PM-2/2
Type	5 pin male straight circular		4 pin male straight circular
Standard	M12 coding A – IEC 61076-2-101		M12 coding A – IEC 61076-2-101
Material	Plastic		Plastic
Cable gland	Connector moulded on cables 1,5 m length	5 m length	Connector moulded on cables 2 m length
Cable	5 x 0,25 mm²		3 x 0,25 mm² (both cables)
Connection type	molded cable		splitting cable
Protection (EN 60529)	IP 67		IP 67

DHZO-TEB, DHZO-TES

ISO 4401: 2005
Mounting surface: 4401-03-02-0-05 (see table P005)
(for /Y surface 4401-03-03-0-05 without X port)

DHZO-TEB-*-05
DHZO-TES-*-05

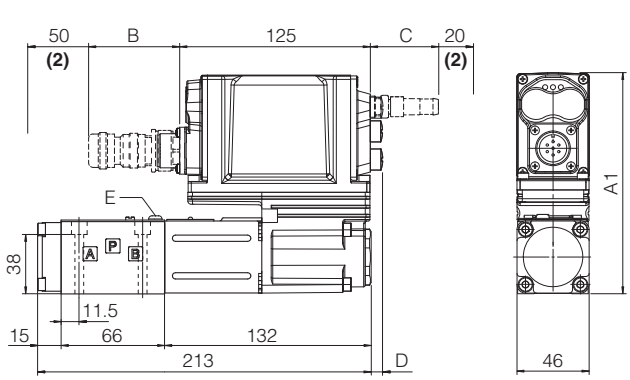

DHZO-TEB-*-07
DHZO-TES-*-07

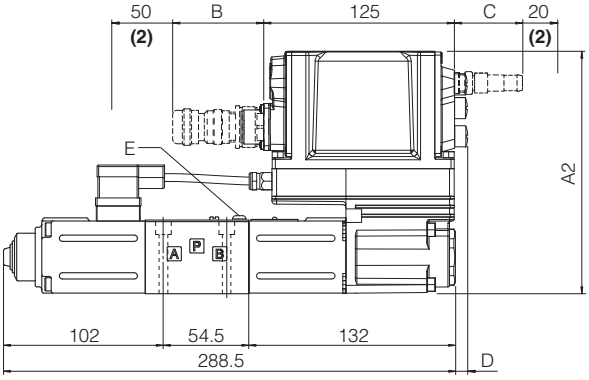

DHZO	A1	A2	B (1)	C (1)	D	E (air bleeding)	Mass [kg]	
TEB - SN - IL	140	155	60	-	-	3	DHZO-*-05	DHZO-*-07
TEB - SN - NP	140	155	100	-	-			
TES - SN - NP, BC, BP, EH	140	155	100	58	8		2,7	3,4
TES - SN - EW, EI, EP	155	155	100	58	8			
TES - SP, SF, SL - *	155	155	100	58	8			

(1) The indicated dimension refers to the longer connectors or Bluetooth adapter
For dimensions of connectors and Bluetooth adapter, see sections 21.6, 21.7 and 21.8
(2) Space required for connection cable and for connector removal

DKZOR-TEB, DKZOR-TES

ISO 4401: 2005
Mounting surface: 4401-05-04-0-05 (see table P005)
(for /Y surface 4401-05-05-0-05 without X port)

DKZOR-TEB-*-15
DKZOR-TES-*-15

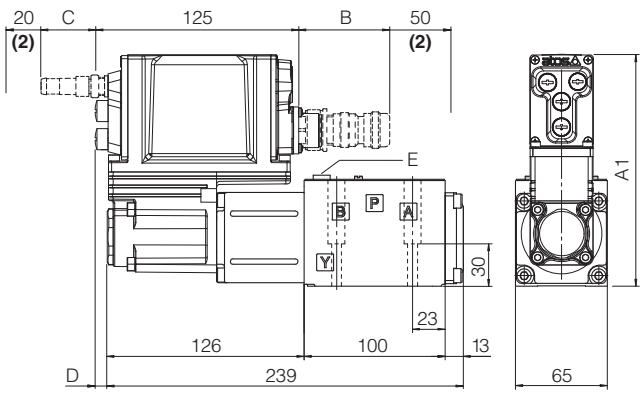

DKZOR-TEB-*-17
DKZOR-TES-*-17

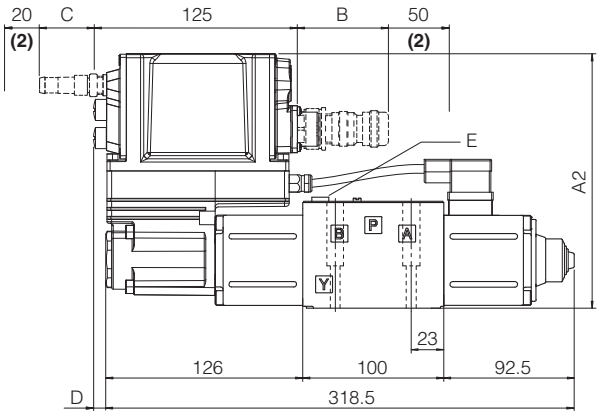

DKZOR	A1	A2	B (1)	C (1)	D	E (air bleeding)	Mass [kg]	
TEB - SN - IL	150	165	60	-	-	4	DKZOR-*-15	DKZOR-*-17
TEB - SN - NP	150	165	100	-	-			
TES - SN - NP, BC, BP, EH	150	165	100	58	8	or	4,7	5,4
TES - SN - EW, EI, EP	165	165	100	58	8	13		
TES - SP, SF, SL - *	165	165	100	58	8			

(1) The indicated dimension refers to the longer connectors or Bluetooth adapter
For dimensions of connectors and Bluetooth adapter, see sections 21.6, 21.7 and 21.8
(2) Space required for connection cable and for connector removal

Note: for /B option the solenoid, the LVDT transducer and the on-board digital driver are at side of port A

25 FASTENING BOLTS AND SEALS

	DHZO	DKZOR
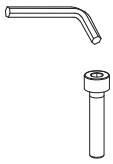	**Fastening bolts:** 4 socket head screws M5x50 class 12.9 Tightening torque = 8 Nm	**Fastening bolts:** 4 socket head screws M6x40 class 12.9 Tightening torque = 15 Nm
	Seals: 4 OR 108 Diameter of ports A, B, P, T: Ø 7,5 mm (max) 1 OR 2025 Diameter of port Y: Ø = 3,2 mm (only for /Y option)	**Seals:** 5 OR 2050 Diameter of ports A, B, P, T: Ø 11,2 mm (max) 1 OR 108 Diameter of port Y: Ø = 5 mm (only for /Y option)

26 RELATED DOCUMENTATION

FS001	Basics for digital electrohydraulics	**K800**	Electric and electronic connectors
FS500	Digital proportional valves with p/Q control	**P005**	Mounting surfaces for electrohydraulic valves
FS900	Operating and maintenance information for proportional valves	**QB300**	Quickstart for TEB valves commissioning
FY100	Safety proportional valves - option /U	**QF300**	Quickstart for TES valves commissioning
FY200	Safety proportional valves - option /K	**Y010**	Basics for safety components
GS500	Programming tools	**E-MAN-RI-LEB**	TEB/LEB user manual
GS510	Fieldbus	**E-MAN-RI-LES**	TES/LES user manual
GS520	IO-Link interface	**E-MAN-RI-LES-S**	TES/LES with p/Q control user manual

Digital proportional directional valves high performance

direct, with on-board driver, LVDT transducer and positive spool overlap

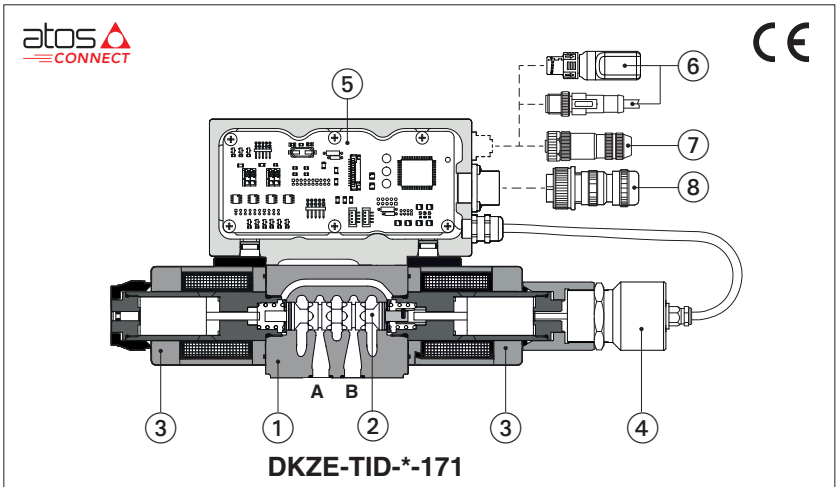

DKZE-TID-*-171

① Valve body
② Spool
③ Proportional solenoid
④ LVDT transducer
⑤ On-board digital driver
⑥ Bluetooth/USB connection - only for TID-NP
⑦ CANopen connector - only for TID-BC
⑧ Main connector

DHZE-TID, DKZE-TID

Digital high performances proportional directional valves, direct, with LVDT position transducer and positive spool overlap for directional controls and not compensated flow regulations.

TID on-board digital driver performs the valve's hydraulic regulation according to the reference signal, analog for TID-NP or CANopen for TID-BC.

For **TID-NP**, Bluetooth/USB connection is always present for valve settings via mobile App and Atos PC software.

For **TID-BC**, CANopen interface is always present for valve settings via fieldbus and Atos PC software.

The LVDT transducer grants high regulation accuracy and response sensitivity.

With de-energized proportional solenoids, the mechanical central position of the spool is performed by centering springs.

DHZE:	**DKZE**:
Size: **06** - ISO 4401	Size: **10** - ISO 4401
4/3 and 4/2 way	4/3 and 4/2 way
Max flow: **80 l/min**	Max flow: **180 l/min**
Max pressure: **350 bar**	Max pressure: **315 bar**

1 MODEL CODE

DHZE	-	TID	-	NP	-	0	71	-	S	5	/	*	/	*	*	/	*

DHZE = size 06
DKZE = size 10

TID = on-board digital driver and LVDT transducer

Fieldbus interfaces:
NP = Not present (USB port available)
BC = CANopen (USB port not available) **(1)**

Valve size ISO 4401:
0 = 06 **1** = 10

Series number

Seals material, see section 8 :
- = NBR
PE = FKM

Bluetooth option (2), only for TID-NP, see section 4 :
T = Bluetooth adapter supplied with the valve

Hydraulic options (2):
B = on-board digital driver, connectors and LVDT position transducer at side of port A

Electronic options, only for **TID-NP (2)**:
I = current reference input and monitor 4÷20mA
J = current reference input 4÷20mA and voltage monitor ±10 VDC

Configuration: **Standard** Option **/B**

51 =

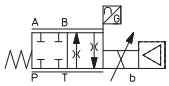

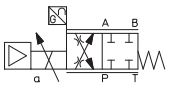

53 =

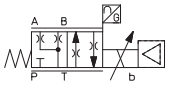

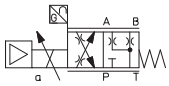

71 =

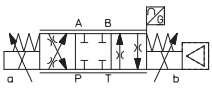

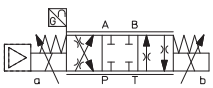

73 =

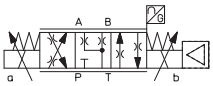

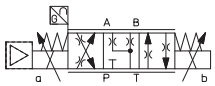

Spool size:	**3** (L,S,D)	**5** (L,S,D)
DHZE =	18	28
DKZE =	45	75

Nominal flow (l/min) at Δp 10 bar P-T (see section 6)

Spool type, regulating characteristics, see section 9 :

L = linear **S** = progressive **D** = differential-progressive
P-A = Q, B-T = Q/2
P-B = Q/2, A-T = Q

(1) Reference and monitor signals only via CANopen (analog signals not available)
(2) Possible combined options: /BI, /BJ (/T Bluetooth adapter option can be combined with all other options)

2 GENERAL NOTES

Atos digital proportionals valves are CE marked according to the applicable directives (e.g. Immunity and Emission EMC Directive).
Installation, wirings and start-up procedures must be performed according to the general prescriptions shown in tech table **FS900** and in the user manuals included in the E-SW-SETUP programming software.

3 VALVE SETTINGS AND PROGRAMMING TOOLS - see tech. table **GS500**

3.1 TID-NP

Atos CONNECT mobile App

Free downloadable App for smartphones and tablets which allows quick access to valve main functional parameters and basic diagnostic information via Bluetooth, thus avoiding physical cable connection and significantly reducing commissioning time.
Atos CONNECT supports Atos digital valve drivers equipped with E-A-BTH adapter or with built-in Bluetooth. It does not support valves with p/Q control or axis controls.

Download on the App Store

GET IT ON Google Play

E-SW-SETUP PC software

Free downloadable software for PC allows to set all valve functional parameters and to access complete diagnostic information of digital valve drivers via Bluetooth/USB service port.
Atos E-SW-SETUP PC software supports all Atos digital valve drivers and it is available at www.atos.com in MyAtos area.

WARNING: drivers USB port is not isolated! For E-C-SB-USB/M12 cable, the use of E-A-SB-USB/OPT isolator adapter is highly recommended for PC protection

Bluetooth or USB connection

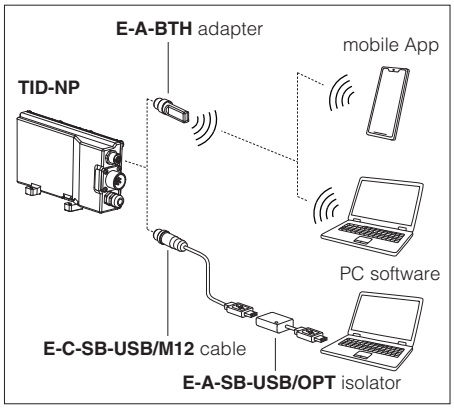

3.2 TID-BC

E-SW-SETUP PC software

Free downloadable software for PC allows to set all valve functional parameters and to access complete diagnostic information of digital valve drivers via CANopen connector.
Atos E-SW-SETUP PC software supports all Atos digital valve drivers and it is available at www.atos.com in MyAtos area.

CANopen connection

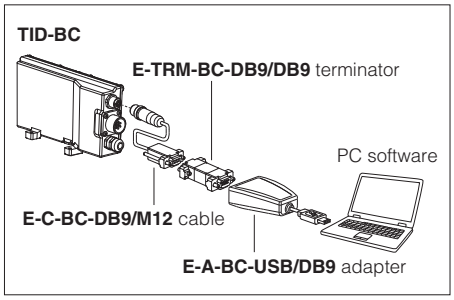

4 BLUETOOTH OPTION - only for TID-NP - see tech. table **GS500**

T option adds Bluetooth® connectivity to Atos valve drivers thanks to E-A-BTH adapter, which can be left permanently installed on-board, to allow the Bluetooth connection with the valve drivers at any time. E-A-BTH adapter can also be purchased separately and used to connect with any supported Atos digital product.
Bluetooth connection to the valve can be protected against unauthorised access by setting a personal password. The adapter leds visually indicates the status of valve driver and Bluetooth connection.

WARNING: for the list of countries where the Bluetooth adapter has been approved, see tech. table **GS500**
T option is not available for the Indian market, so the Bluetooth adapter must be ordered separately.

5 GENERAL CHARACTERISTICS

Assembly position	Any position
Subplate surface finishing to ISO 4401	Acceptable roughness index: Ra ≤ 0,8, recommended Ra 0,4 – Flatness ratio 0,01/100
MTTFd valves according to EN ISO 13849	150 years, for further details see technical table P007
Ambient temperature range	**Standard** = -20°C ÷ +60°C **/PE** option = -20°C ÷ +60°C
Storage temperature range	**Standard** = -20°C ÷ +70°C **/PE** option = -20°C ÷ +70°C
Surface protection	Zinc coating with black passivation (body), tin plating (driver housing)
Corrosion resistance	Salt spray test (EN ISO 9227) > 200 h
Vibration resistance	See technical table G004
Conformity	CE according to EMC directive 2014/30/EU (Immunity: EN 61000-6-2; Emission: EN 61000-6-3) RoHS Directive 2011/65/EU as last update by 2015/863/EU REACH Regulation (EC) n°1907/2006

6 HYDRAULIC CHARACTERISTICS - based on mineral oil ISO VG 46 at 50 °C

Valve model		**DHZE**						**DKZE**					
Pressure limits	[bar]	ports **P**, **A**, **B** = 350; **T** = 210						ports **P**, **A**, **B** = 315; **T** = 210					
Spool type and size **(1)**		**L3, S3**	**D3**		**L5, S5**	**D5**		**L3, S3**	**D3**		**L5, S5**	**D5**	
Nominal flow Δp P-T **(2)**	[l/min]		P-A A-T	P-B B-T		P-A A-T	P-B B-T		P-A A-T	P-B B-T		P-A A-T	P-B B-T
	Δp= 10 bar	18	18	9	28	28	14	45	45	22	75	75	37
	Δp= 30 bar	30	30	15	50	50	25	80	80	40	130	130	65
	Δp= 70 bar	45	45	22	75	75	37	120	120	60	170	170	85
	Max permissible flow	50	50	25	80	80	40	130	130	65	180	180	90
Leakage	[cm³/min]	<30 (at p = 100 bar); <135 (at p = 350 bar)						<80 (at p = 100 bar); <600 (at p = 315 bar)					
Response time **(3)**	[ms]	≤ 15						≤ 20					
Hysteresis		≤ 0,2 [% of max regulation]											
Repeatibility		± 0,1 [% of max regulation]											
Thermal drift		zero point displacement < 1% at ΔT = 40°C											

(1) For spool type **D*** the flow value is referred to Δp/2 per control edge
(2) For different Δp, the max flow is in accordance to the diagrams in section 9.2
(3) 0-100% step signal

7 ELECTRICAL CHARACTERISTICS

Power supplies	Nominal : +24 VDC Rectified and filtered : VRMS = 20 ÷ 32 VMAX (ripple max 10 % VPP)	
Max power consumption	50 W	
Max. solenoid current	**DHZE** = 2,6 A **DKZE** = 3 A	
Coil resistance R at 20°C	**DHZE** = 3,1 Ω **DKZE** = 3,2 Ω	
Analog input signals **(1)**	Voltage: range ±10 VDC (24 VMAX tolerant) Input impedance: Ri > 50 kΩ Current: range ±20 mA Input impedance: Ri = 500 Ω	
Monitor outputs **(1)**	Output range: voltage ±10 VDC @ max 5 mA current ±20 mA @ max 500 Ω load resistance	
Alarms	Solenoid not connected/short circuit, cable break with current reference signal **(1)**, over/under temperature, valve spool transducer malfunctions, alarms history storage function	
Insulation class	H (180°) Due to the occurring surface temperatures of the solenoid coils, the European standards ISO 13732-1 and EN982 must be taken into account	
Protection degree to DIN EN60529	IP66 / IP67 with mating connectors	
Duty factor	Continuous rating (ED=100%)	
Additional characteristics	Short circuit protection of solenoid's current supply; spool position control by P.I.D. with rapid solenoid switching; protection against reverse polarity of power supply	
Communication interface	USB - Atos ASCII coding	CANopen - EN50325-4 + DS408
Communication physical layer	not insulated - USB 2.0 + USB OTG	optical insulated - CAN ISO11898
Recommended wiring cable	LiYCY shielded cables, see section 15	

(1) Available only for TID-NP

Note: a maximum time of 500 ms (depending on communication type) has to be considered between the driver energizing with the 24 VDC power supply and when the valve is ready to operate. During this time the current to the valve coils is switched to zero.

8 **SEALS AND HYDRAULIC FLUID** - for other fluids not included in below table, consult Atos Technical Office

Seals, recommended fluid temperature	NBR seals (standard) = -20°C ÷ +60°C, with HFC hydraulic fluids = -20°C ÷ +50°C FKM seals (/PE option) = -20°C ÷ +80°C		
Recommended viscosity	20÷100 mm²/s - max allowed range 15 ÷ 380 mm²/s		
Max fluid contamination level — normal operation	ISO4406 class 18/16/13 NAS1638 class 7		see also filter section at www.atos.com or KTF catalog
Max fluid contamination level — longer life	ISO4406 class 16/14/11 NAS1638 class 5		
Hydraulic fluid	**Suitable seals type**	**Classification**	**Ref. Standard**
Mineral oils	NBR, FKM	HL, HLP, HLPD, HVLP, HVLPD	DIN 51524
Flame resistant without water	FKM	HFDU, HFDR	ISO 12922
Flame resistant with water	NBR	HFC	

9 **DIAGRAMS** (based on mineral oil ISO VG 46 at 50 °C)

9.1 Regulation diagrams - values measure at Δp 30 bar P-T

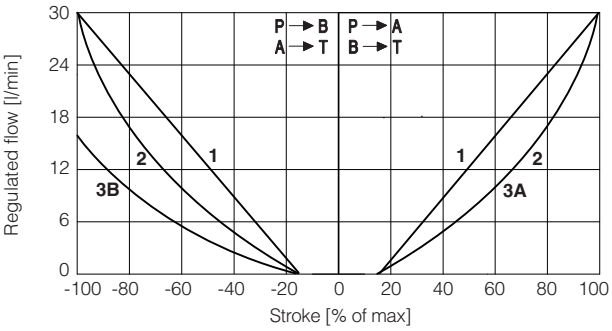

DHZE
1 = L3 **2** = S3 **3A** = D3 (P → A, A → T)
3B = D3 (P → B, B → T)

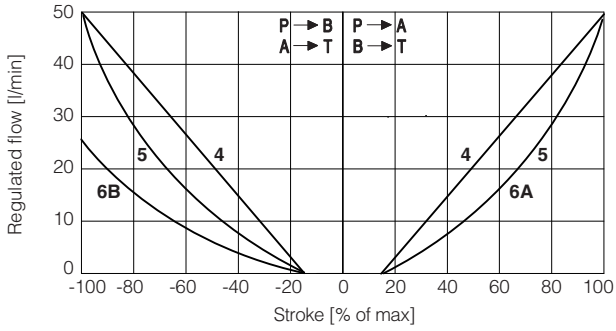

DHZE
4 = L5 **5** = S5 **6A** = D5 (P → A, A → T)
6B = D5 (P → B, B → T)

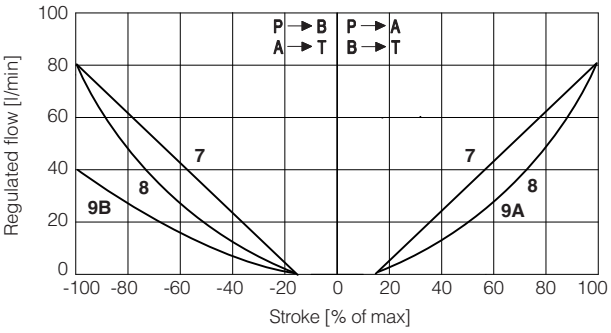

DKZE
7 = L3 **8** = S3 **9A** = D3 (P → A, A → T)
9B = D3 (P → B, B → T)

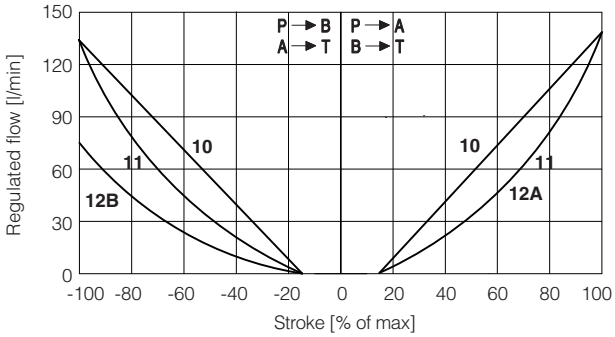

DKZE
10 = L5 **11** = S5 **12A** = D5 (P → A, A → T)
12B = D5 (P → B, B → T)

Note: Hydraulic configuration vs. reference signal for configuration 71 and 73 (standard and option /B)

Reference signal 0 ÷ +10 V / 12 ÷ 20 mA } P → A / B → T Reference signal 0 ÷ -10 V / 12 ÷ 4 mA } P → B / A → T

9.2 Operating limits

DHZE

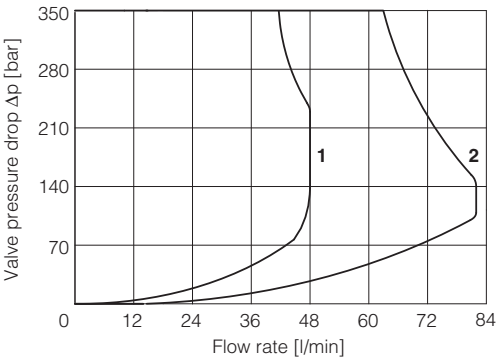

1 = spool L3, S3, D3 **2** = spool L5, S5, D5

DKZE

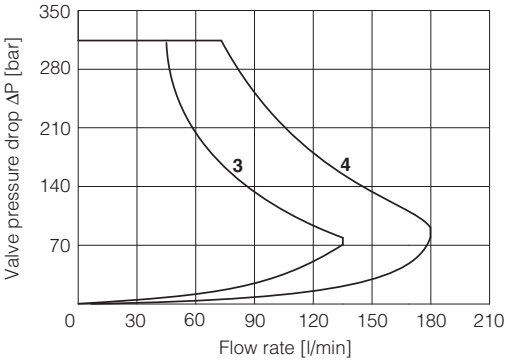

3 = spool S3, L3, D3 **4** = spool S5, L5, D5

10 HYDRAULIC OPTIONS

B = Configurations 51, 53: solenoid, on-board digital driver connectors and LVDT transducer at side of port A.
Configurations 71, 73: on-board digital driver connections and LVDT transducer at side of port A.
For hydraulic configuration vs reference signal, see 9.1

11 ELECTRONIC OPTIONS - only for **TID-NP**

I = This option provides 4 ÷ 20 mA current reference and monitor signals, instead of the standard ±10 VDC.
It is normally used in case of long distance between the machine control unit and the valve or where the reference signal can be affected by electrical noise; the valve functioning is disabled in case of reference signal cable breakage.

J = This option provides 4 ÷ 20 mA current reference and ±10 VDC voltage monitor signals.
The valve functioning is disabled in case of reference signal cable breakage.

12 POSSIBLE COMBINED OPTIONS

/BI, /BJ

Note: **/T** Bluetooth adapter option can be combined with all other options

13 POWER SUPPLY AND SIGNALS SPECIFICATIONS

13.1 Power supply (V+ and V0)

The power supply must be appropriately stabilized or rectified and filtered: apply at least a 10000 μF/40 V capacitance to single phase rectifiers or a 4700 μF/40 V capacitance to three phase rectifiers.

⚠ A safety fuse is required in series to the power supply: 2,5 A time lag fuse.

13.2 Flow reference input signal (Q_INPUT+) - only for **TID-NP**

The driver controls in closed loop the valve spool position proportionally to the external reference input signal.
Standard (voltage reference input): default is ±10 VDC and can be reconfigured via software, within a maximum range of ±10 VDC.
Options /I and /J (current reference input): default is 4 ÷ 20 mA and can be reconfigured via software, within a maximum range of ± 20 mA.

13.3 Flow monitor output signal (Q_MONITOR) - only for **TID-NP**

The driver generates an analog output signal proportional to the actual spool position of the valve; the monitor output signal can be software set to show other signals available in the driver.
Standard and option /J (voltage monitor output): default is ±10 VDC and can be reconfigured via software, within a maximum range of ±10 VDC.
Option /I (current monitor output): default is 4 ÷ 20 mA and can be reconfigured via software, within a maximum range of ± 20 mA.

Note:
monitor output signal must not be directly used to activate safety functions, like to switch-ON/OFF the machine's safety components, as prescribed by the European standards (Safety requirements of fluid technology systems and components-hydraulics, ISO 4413).

14 ELECTRONIC CONNECTIONS

14.1 Main connector signals - 7 pin (A1) (A2)

PIN	TID-NP	TID-BC	TECHNICAL SPECIFICATIONS	NOTES
A	**V+**		Power supply 24 VDC	Input - power supply
B	**V0**		Power supply 0 VDC	Gnd - power supply
C	**AGND**	**(1)**	Analog ground	Gnd - analog signal
D	**Q_INPUT+**	**(1)**	Flow reference input signal: ±10 VDC for standard, 4 ÷ 20 mA for /I and /J options	Input - analog signal
E	**INPUT-**	**(1)**	Negative reference input signal for Q_INPUT+	Input - analog signal
F	**Q_MONITOR**	**(1)**	Flow monitor output signal: ±10 VDC for standard and /J option, 4 ÷ 20 mA for /I option, referred to AGND	Output - analog signal
G	**EARTH**		Internally connected to driver housing	

(1) Do not connect for TID-BC

14.2 USB connector - M12 5 pin (B) - only for **TID-NP**

PIN	SIGNAL	TECHNICAL SPECIFICATION (1)
1	**+5V_USB**	Power supply
2	**ID**	Identification
3	**GND_USB**	Signal zero data line
4	**D-**	Data line -
5	**D+**	Data line +

(1) Shield connection on connector housing is recommended

14.3 CANopen connector - M12 - 5 pin (C) - only for **TID-BC**

PIN	SIGNAL	TECHNICAL SPECIFICATION (1)
1	**CAN_SHLD**	Shield
2	**not used**	-
3	**CAN_GND**	Signal zero data line
4	**CAN_H**	Bus line (high)
5	**CAN_L**	Bus line (low)

(1) Shield connection on connector housing is recommended

14.4 Connections layout

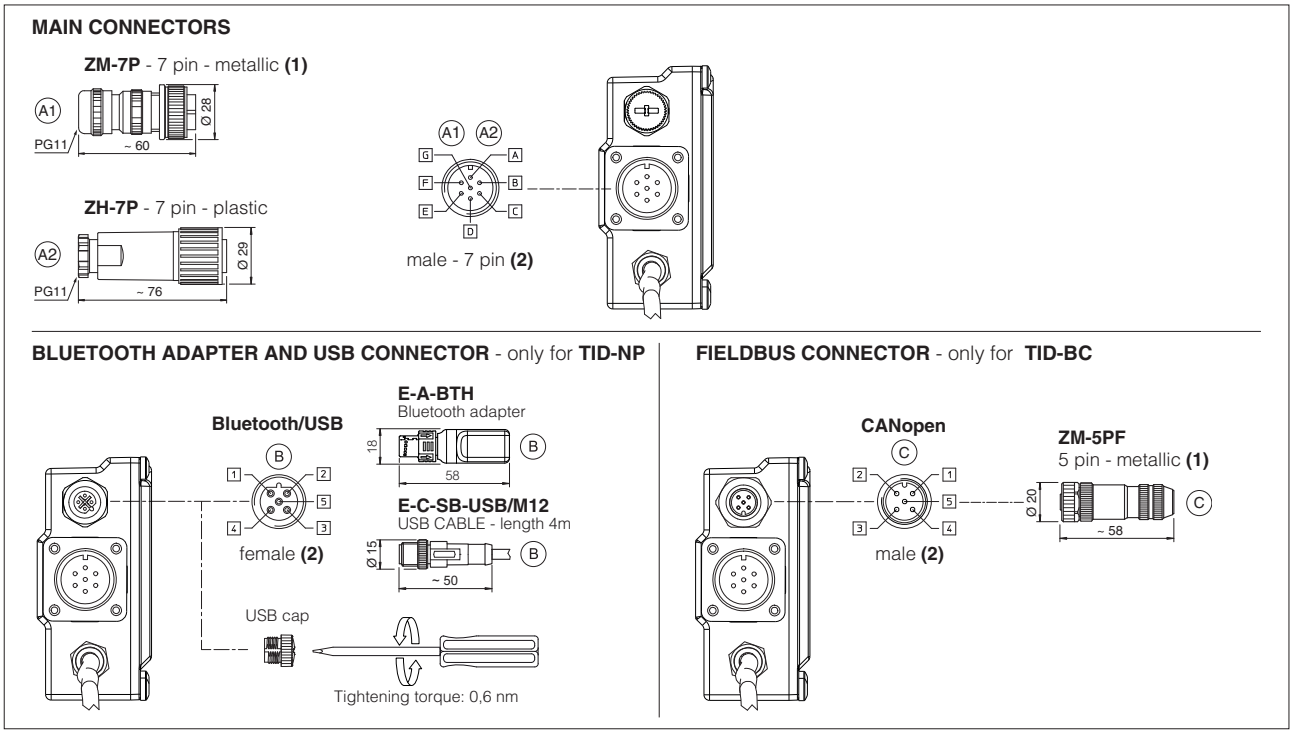

(1) use of metallic connectors is strongly recommended in order to fulfill EMC requirements **(2)** pin layout always referred to driver's view

15 CONNECTORS CHARACTERISTICS - to be ordered separately

15.1 Main connectors - 7 pin

CONNECTOR TYPE	POWER SUPPLY AND SIGNALS	POWER SUPPLY AND SIGNALS
CODE	A1 ZM-7P	A2 ZH-7P
Type	7pin female straight circular	7pin female straight circular
Standard	According to MIL-C-5015	According to MIL-C-5015
Material	Metallic	Plastic reinforced with fiber glass
Cable gland	PG11	PG11
Recommended cable	LiYCY 7 x 0,75 mm² max 20 m (logic and power supply) or LiYCY 7 x 1 mm² max 40 m (logic and power supply)	LiYCY 7 x 0,75 mm² max 20 m (logic and power supply) or LiYCY 7 x 1 mm² max 40 m (logic and power supply)
Conductor size	up to 1 mm² - available for 7 wires	up to 1 mm² - available for 7 wires
Connection type	to solder	to solder
Protection (EN 60529)	IP 67	IP 67

15.2 Fieldbus communication connector - only for TID-BC

CONNECTOR TYPE	CANopen
CODE	C ZM-5PF
Type	5 pin female straight circular
Standard	M12 coding A – IEC 61076-2-101
Material	Metallic
Cable gland	Pressure nut - cable diameter 6÷8 mm
Cable	CANbus Standard (DR 303-1)
Connection type	screw terminal
Protection (EN 60529)	IP67

16 FASTENING BOLTS AND SEALS

	DHZE	DKZE
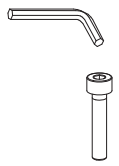	**Fastening bolts:** 4 socket head screws M5x30 class 12.9 Tightening torque = 8 Nm	**Fastening bolts:** 4 socket head screws M6x40 class 12.9 Tightening torque = 15 Nm
	Seals: 4 OR 108 Diameter of ports A, B, P, T: Ø 7,5 mm (max)	**Seals:** 5 OR 2050 Diameter of ports A, B, P, T: Ø 11,2 mm (max)

DHZE-TID-*-05

ISO 4401: 2000
Mounting surface: 4401-03-02-0-05
(see table P005)

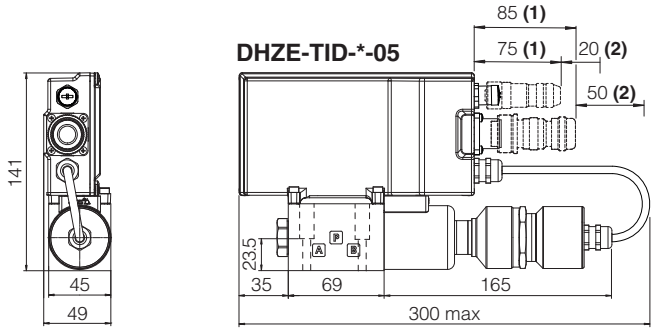

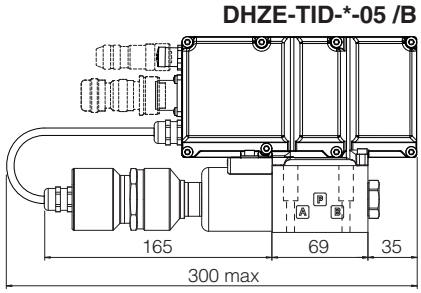

DHZE-*-05	Mass [kg]
all versions	2,5

(1) The indicated dimension refers to the longer connectors or Bluetooth adapter
For dimensions of connectors and Bluetooth adapter, see section 14.4
(2) Space required for connection cable and for connector removal

DHZE-TID-*-07

ISO 4401: 2000
Mounting surface: 4401-03-02-0-05
(see table P005)

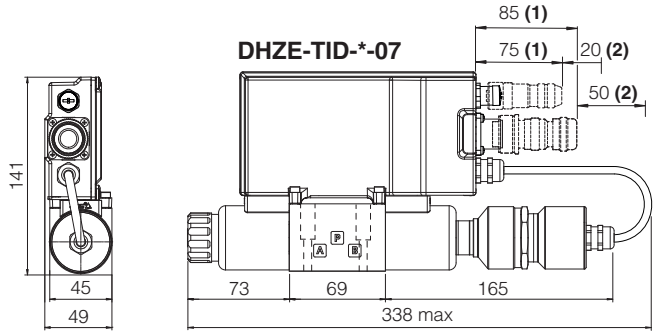

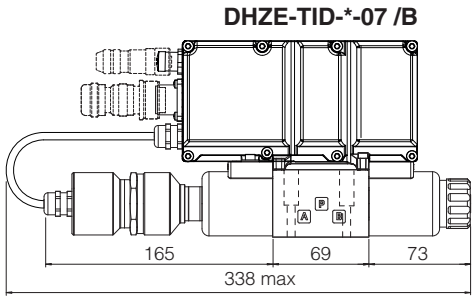

DHZE-*-07	Mass [kg]
all versions	3

(1) The indicated dimension refers to the longer connectors or Bluetooth adapter
For dimensions of connectors and Bluetooth adapter, see section 14.4
(2) Space required for connection cable and for connector removal

DKZE-TID-*-15

ISO 4401: 2000
Mounting surface: 4401-05-04-0-05
(see table P005)

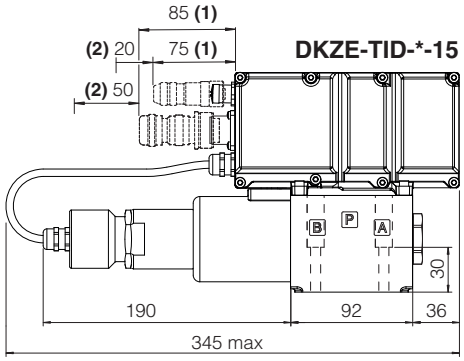

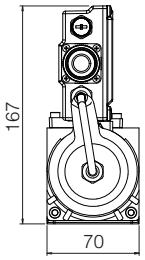

DKZE-TID-*-15 /B

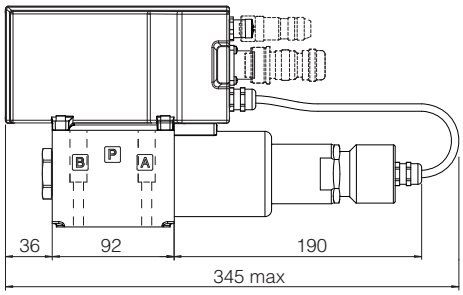

DKZE-*-15	Mass [kg]
all versions	5,5

(1) The indicated dimension refers to the longer connectors or Bluetooth adapter
For dimensions of connectors and Bluetooth adapter, see section 14.4
(2) Space required for connection cable and for connector removal

DKZE-TID-*-17

ISO 4401: 2000
Mounting surface: 4401-03-02-0-05
(see table P005)

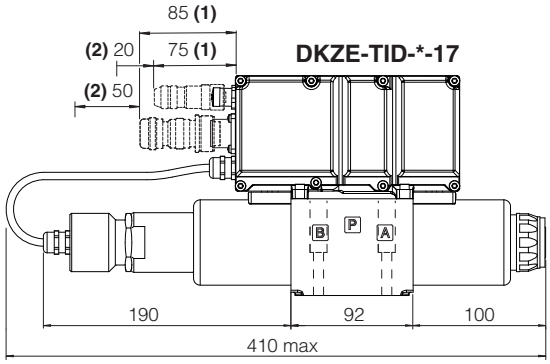

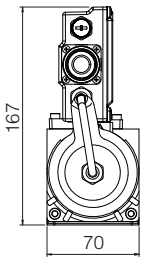

DKZE-TID-*-17 /B

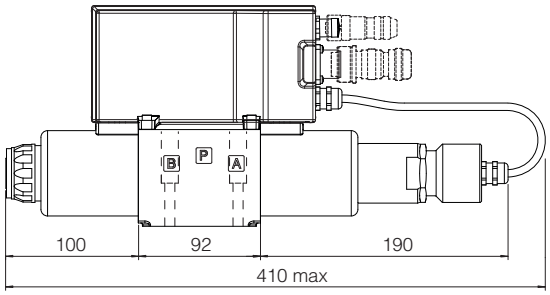

DHZE-*-17	Mass [kg]
all versions	7,1

(1) The indicated dimension refers to the longer connectors or Bluetooth adapter
For dimensions of connectors and Bluetooth adapter, see section 14.4
(2) Space required for connection cable and for connector removal

18 RELATED DOCUMENTATION

FS001	Basics for digital electrohydraulics	**K800**	Electric and electronic connectors
FS900	Operating and maintenance information for proportional valves	**P005**	Mounting surfaces for electrohydraulic valves
GS500	Programming tools	**QD300**	Quickstart for TID valves commissioning
GS510	Fieldbus	**E-MAN-RI-TID**	TID user manual

Proportional directional valves high performance

direct, with LVDT transducer and positive spool overlap

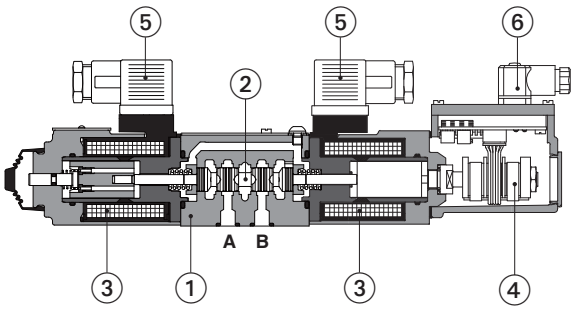

DHZO-T-071

① Valve body
② Spool
③ Proportional solenoid
④ LVDT transducer
⑤ Solenoid connector
⑥ Transducer connector

DHZO-T, DKZOR-T

Proportional directional valves, direct, with LVDT position transducer and positive spool overlap for best dynamics in directional controls and not compensated flow regulations.

The valves operate in association with digital off-board divers, see section 3.

The LVDT transducer grants very high regulation accuracy and response sensitivity.

With de-energized proportional solenoids, mechanical central position of the spool is performed by centering springs.

Spools regulation characteristics:
L = linear
S = progressive, for fine low flow control
D = differential-progressive, for control of actuators with area ratio 1:2
Q5 and Q6 = for P/Q control

DHZO:	**DKZOR**:
Size: **06** - ISO 4401	Size: **10** - ISO 4401
Max flow: **80 l/min**	Max flow: **180 l/min**
Max pressure: **350 bar**	Max pressure: **315 bar**

1 MODEL CODE OF STANDARD SPOOLS

DHZO - T - 0 71 - L 5 / * * / *

DHZO = size 06
DKZOR = size 10

T = with LVDT transducer

Valve size ISO 4401:
0 = 06 **1** = 10

Configuration:

	Standard	Option **/B**
51 =	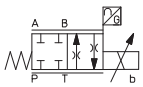	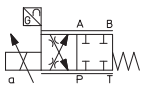
53 =	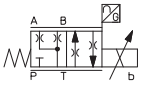	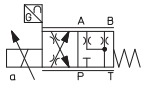
71 =	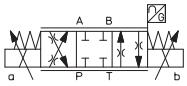	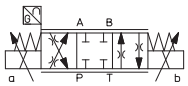
72 = (1)	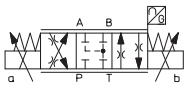	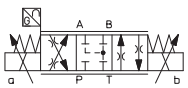
73 =	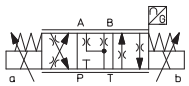	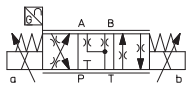

Seals material, see section 7 :
- = NBR
PE = FKM
BT = HNBR

Series number

Hydraulic options (2):
B = solenoid and LVDT transducer at side of port A
Y = external drain

Spool size:	**14** (L)	**1** (L)	**2** (S)	**3** (L,S,D)	**5** (L,S,D)
DHZO =	1	4,5	8	18	28
DKZOR =	-	-	-	45	75

Nominal flow (l/min) at Δp 10bar P-T

Spool type, regulating characteristics **(3)**:

L = linear

S = progressive

D = differential-progressive

P-A = Q, B-T = Q/2
P-B = Q/2, A-T = Q

(1) Only for **DKZOR-*-S5** the spool overlapping type 2 provides the same characteristic of type 1, but in central position the internal leakages from P to A and B are drained to tank, avoiding the drift of cylinders with differential areas
(2) Possible combined options: /BY
(3) Spools for P/Q control, see section 2

2 MODEL CODE OF SPOOLS FOR ALTERNATED P/Q CONTROL - for valve model code and options, see section 1

DHZO	-	T	-	0	73 - V9	/	*	*	/	*

Configuration and spool:

73-Q5

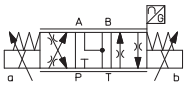

73-Q5/B

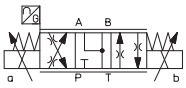

73-V9

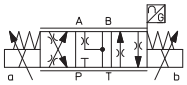

73-V9/B

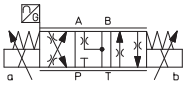

Spool size:		**Q5**	**V9**
DHZO	=	30	30
DKZOR	=	75	75

Nominal flow (l/min) at Δp 10 bar P-T

Q5

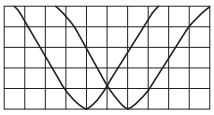

For alternated P/Q control
see 8.1 - diagram 16

V9

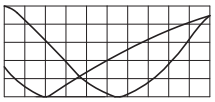

For alternated P/Q control of injection cycle in plastic machinery
see 8.1 - diagram 17

3 OFF-BOARD ELECTRONIC DRIVERS

Please include in the driver order also the complete code of the connected proportional valve.

Drivers model	E-BM-TEB	E-BM-TES
Type	digital	digital
Format	DIN-rail panel	DIN-rail panel
Tech table	GS230	GS240

4 GENERAL CHARACTERISTICS

Assembly position	Any position
Subplate surface finishing to ISO 4401	Acceptable roughness index: Ra ≤ 0,8, recommended Ra 0,4 – Flatness ratio 0,01/100
MTTFd valves according to EN ISO 13849	150 years, see technical table P007
Ambient temperature range	**Standard** = -20°C ÷ +60°C **/PE** option = -20°C ÷ +60°C **/BT** option = -40°C ÷ +60°C
Storage temperature range	**Standard** = -20°C ÷ +70°C **/PE** option = -20°C ÷ +70°C **/BT** option = -40°C ÷ +70°C
Surface protection	Zinc coating with black passivation
Corrosion resistance	Salt spray test (EN ISO 9227) > 200 h
Compliance	CE according to EMC directive 2014/30/EU (Immunity: EN 61000-6-2; Emission: EN 61000-6-3) RoHS Directive 2011/65/EU as last update by 2015/863/EU REACH Regulation (EC) n°1907/2006

5 HYDRAULIC CHARACTERISTICS - based on mineral oil ISO VG 46 at 50 °C

Valve model		**DHZO**						**DKZOR**			
Pressure limits	[bar]	ports **P**, **A**, **B** = 350; **T** = 210 (250 with external drain /Y) **Y** = 10						ports **P**, **A**, **B** = 315; **T** = 210 (250 with external drain /Y) **Y** = 10			
Configuration		**51, 53, 71, 73**					**73**	**51, 53, 71, 73**		**72**	**73**
Spool type	standard	**L14**	**L1**	**S2**	**L3,S3,D3**	**L5,S5,D5**		**L3,S3,D3**	**L5,S5,D5**	**S5**	
	P/Q						**Q5,V9**				**Q5,V9**
Nominal flow Δp P-T [l/min] **(1)**	Δp= 10 bar	1	4,5	8	18	28	30	45	75	75	75
	Δp= 30 bar	1,7	8	14	30	50	52	80	130	130	130
	Δp= 70 bar	2,6	12	21	45	75	80	120	170	170	170
	Max permissible flow **(2)**	4	18	30	50	80	80	130	180	180	180
Leakage	[cm³/min]	<30 (at p = 100 bar); <135 (at p = 350 bar)						<80 (at p = 100 bar); <600 (at p = 315 bar)			
Response time **(3)**	[ms]	≤ 15						≤ 20			
Hysteresis		≤ 0,2 [% of max regulation]									
Repeatibility		± 0,1 [% of max regulation]									
Thermal drift		zero point displacement < 1% at ΔT = 40°C									

(1) For different Δp, the max flow is in accordance to the diagrams in section 8.2
(2) See detailed diagrams in section 8.3
(3) 0-100% step signal

6 ELECTRICAL CHARACTERISTICS

Max power consumption	30 W
Max. solenoid current	**DHZO** = 2,6 A **DKZOR** = 3 A
Coil resistance R at 20°C	**DHZO** = 3 ÷ 3,3 Ω **DKZOR** = 3,8 ÷ 4,1 Ω
Insulation class	H (180°) Due to the occuring surface temperatures of the solenoid coils, the European standards ISO 13732-1 and EN982 must be taken into account
Protection degree to DIN EN60529	IP65 with mating connectors
Duty factor	Continuous rating (ED=100%)

7 SEALS AND HYDRAULIC FLUIDS - for other fluids not included in below table, consult our technical office

Seals, recommended fluid temperature	NBR seals (standard) = -20°C ÷ +80°C, with HFC hydraulic fluids = -20°C ÷ +50°C FKM seals (/PE option) = -20°C ÷ +80°C HNBR seals (/BT option) = -40°C ÷ +60°C, with HFC hydraulic fluids = -40°C ÷ +50°C		
Recommended viscosity	20÷100 mm²/s - max allowed range 15 ÷ 380 mm²/s		
Max fluid contamination level — normal operation	ISO4406 class 18/16/13 NAS1638 class 7		see also filter section at www.atos.com or KTF catalog
Max fluid contamination level — longer life	ISO4406 class 16/14/11 NAS1638 class 5		
Hydraulic fluid	**Suitable seals type**	**Classification**	**Ref. Standard**
Mineral oils	NBR, FKM, HNBR	HL, HLP, HLPD, HVLP, HVLPD	DIN 51524
Flame resistant without water	FKM	HFDU, HFDR	ISO 12922
Flame resistant with water	NBR, HNBR	HFC	

8 DIAGRAMS - based on mineral oil ISO VG 46 at 50 °C

8.1 Regulation diagrams - values measure at Δp 30 bar P-T

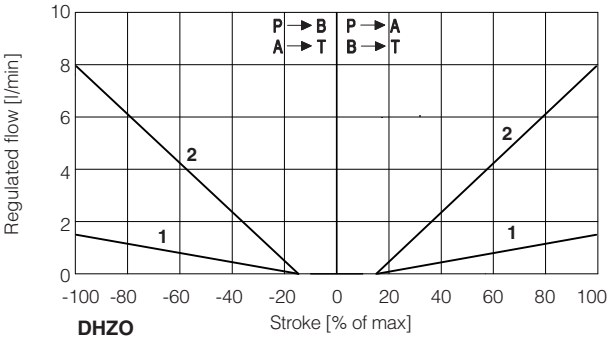

DHZO
1 = L14 **2** = L1

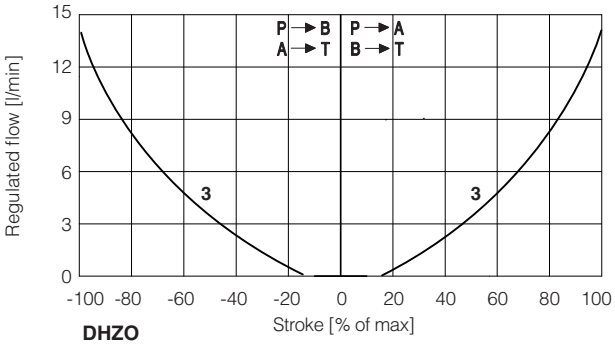

DHZO
3 = S2

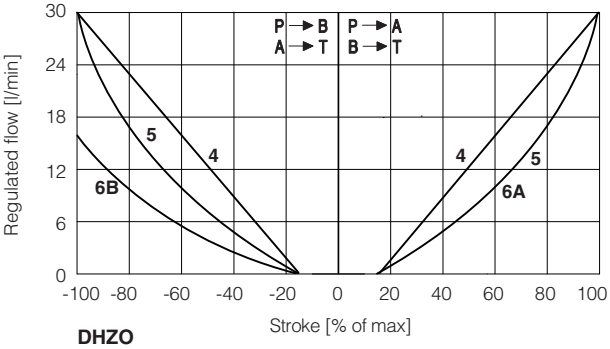

DHZO
4 = L3 **5** = S3 **6A** = D3 (P → A, A → T)
6B = D3 (P → B, B → T)

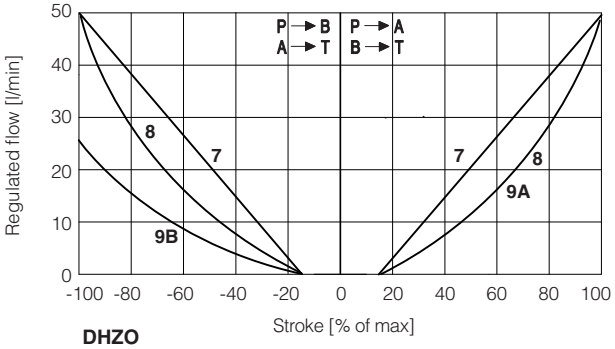

DHZO
7 = L5 **8** = S5 **9A** = D5 (P → A, A → T)
9B = D5 (P → B, B → T)

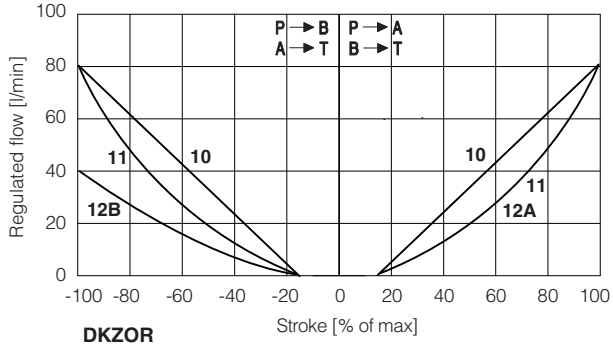

DKZOR
10 = L3 **11** = S3 **12A** = D3 (P → A, A → T)
12B = D3 (P → B, B → T)

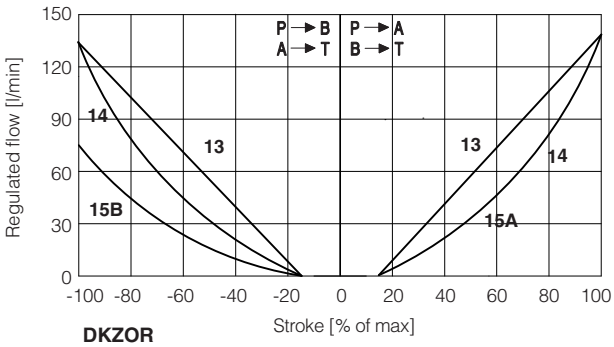

DKZOR
13 = L5 **14** = S5 **15A** = D5 (P → A, A → T)
15B = D5 (P → B, B → T)

Note:
Hydraulic configuration vs. reference signal for configurations 71, 72 and 73 (standard and option /B)

Reference signal 0 ÷ +10 V / 12 ÷ 20 mA } P → A / B → T

Reference signal 0 ÷ -10 V / 12 ÷ 4 mA } P → B / A → T

16 = linear spool **Q5**

Q5 spool type is specific for alternate P/Q controls in combination with S* option of digital integral drivers (see tech table **FS500**).
It allows to control the pressure in A port or B port and it provides a safety central position (A-T/B-T) to depressurize the actuator chambers.
The strong meter-in characteristic makes the spool suitable for both pressure control and motion regulations in several applications.

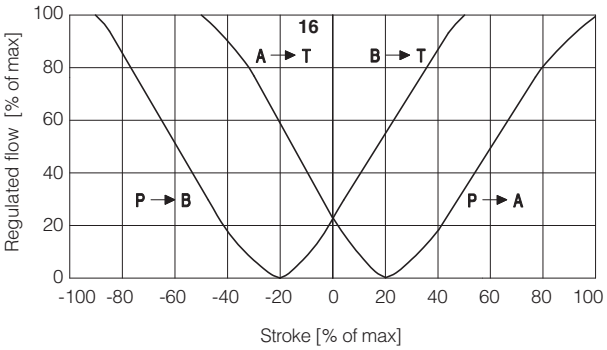

17 = differential - progressive spool **V9**

V9 spool type is specific for alternate P/Q controls in combination with S* option of digital integral drivers (see tech table **FS500**).
This spool is specially designed to manage the whole injection cycle in plastic machinery, thanks to the following specific features:
- strong meter-in characteristic to allow the pressure control in A port during the holding pressure (P-A) and the plasticizing (A-T) phases
- safety central position (A-T/B-T) to depressurize the actuator chambers
- large A-T and B-T flow capability, required during the plasticizing phase, to discharge big volumes from high differential injection cylinders with low pressure drops and permitting the contemporary oil suction from tank

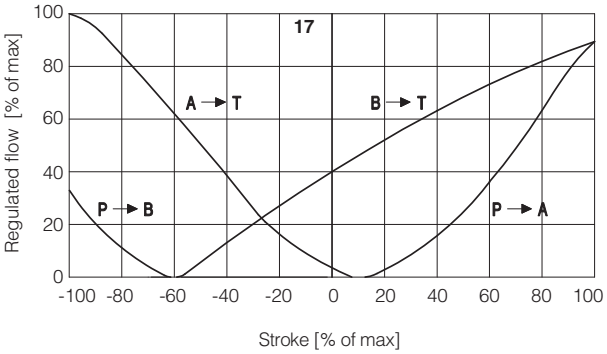

8.2 Flow /Δp diagrams

stated at 100% of valve stroke

DHZO

1 = spool L14
2 = spool L1
3 = spool S2
4 = spool L3, S3, D3
5 = spool L5, S5, D5, V9

DKZOR

6 = spool S3, L3, D3
7 = spool S5, L5, D5, V9

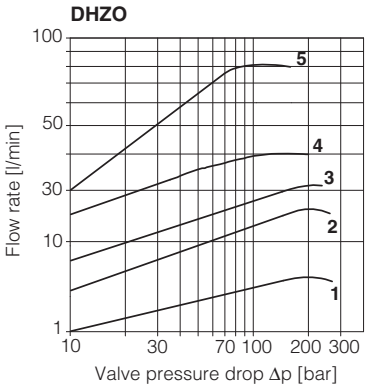

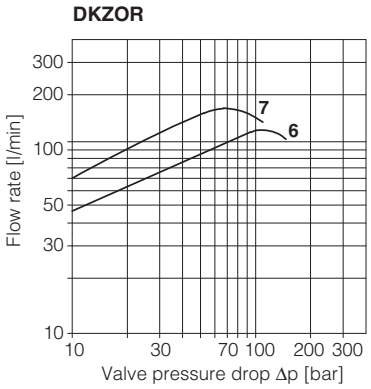

8.3 Operating limits

DHZO

1 = spool L14
2 = spool L1
3 = spool S2
4 = spool L3, S3, D3
5 = spool L5, S5, D5, V9

DKZOR

6 = spool S3, L3, D3
7 = spool S5, L5, D5, V9

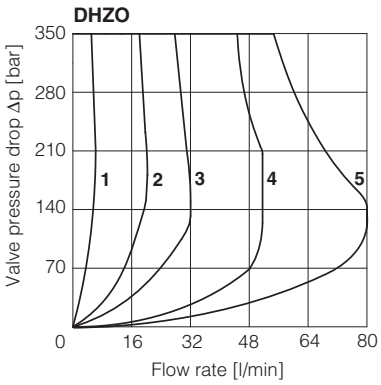

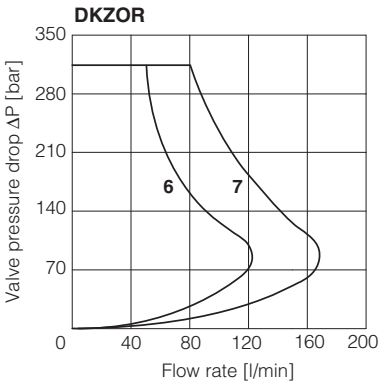

8.4 Response time

The response times in below diagrams are measured at different steps of the reference input signal. They have to be considered as average values. For the valves with digital electronics the dynamics performances can be optimized by setting the internal software parameters.

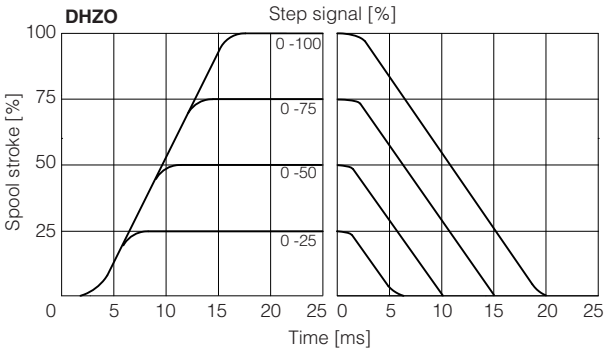

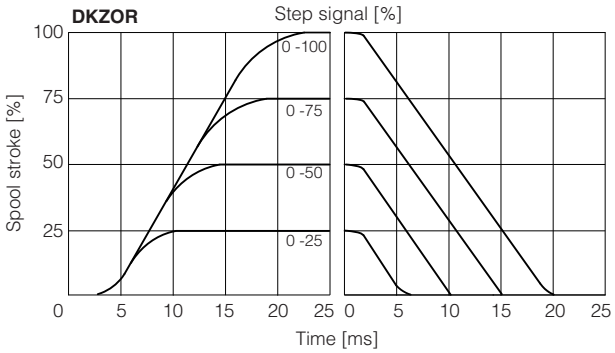

8.5 Bode diagrams

1 = 10% ⟷ 90% nominal stroke
2 = 50% ± 5% nominal stroke

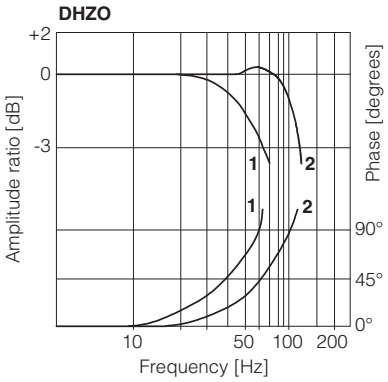

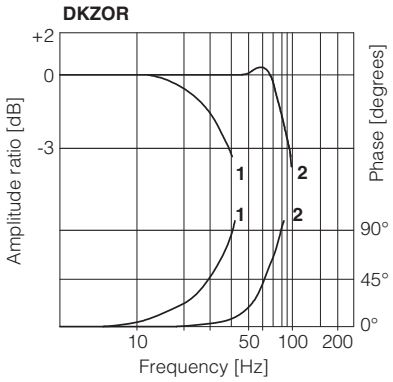

8.6 Operation as throttle valve

Single solenoid valves configuration 51 and 53 can be used as simple throttle valves:
Pmax = 250 bar (option /Y advisable)

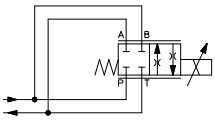

Max flow Δp= 15bar [l/min]	SPOOL TYPE				
	L14	**L1**	**S2**	**L3 S3**	**L5 S5**
DHZO	4	16	28	60	100
DKZOR	-	-	-	160	260

9 HYDRAULIC OPTIONS

B = Solenoid and position transducer at side of port A of the main stage. For hydraulic configuration vs reference signal, see 8.1

Y = This option is mandatory if the pressure in port T exceeds 210 bar.

10 ELECTRICAL CONNECTION

10.1 Solenoid connector - supplied with the valve

PIN	SIGNAL	TECHNICAL SPECIFICATION	Connector code 666
1	**COIL**	Power supply	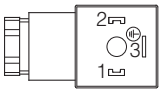
2	**COIL**	Power supply	
3	**GND**	Ground	

10.2 LVDT transducer connector - supplied with the valve

PIN	SIGNAL	TECHNICAL SPECIFICATION	Connector code 345
1	**TR**	Output signal	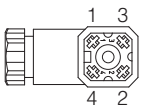
2	**VT-**	Power supply -15VDC	
3	**VT+**	Power supply +15VDC	
4	**GND**	Ground	

11 FASTENING BOLTS AND SEALS

	DHZO	DKZOR
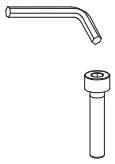	**Fastening bolts:** 4 socket head screws M5x50 class 12.9 Tightening torque = 8 Nm	**Fastening bolts:** 4 socket head screws M6x40 class 12.9 Tightening torque = 15 Nm
	Seals: 4 OR 108; Diameter of ports A, B, P, T: Ø 7,5 mm (max) 1 OR 2025 Diameter of port Y: Ø = 3,2 mm (only for /Y option)	**Seals:** 5 OR 2050; Diameter of ports A, B, P, T: Ø 11,2 mm (max) 1 OR 108 Diameter of port Y: Ø = 5 mm (only for /Y option)

12 INSTALLATION DIMENSIONS [mm]

DHZO-T

ISO 4401: 2005
Mounting surface: 4401-03-02-0-05 (see table P005)
(for /Y surface 4401-03-03-0-05 without X port)

Mass [kg]	
DHZO-T-05	1,9
DHZO-T-07	2,6

DHZO-T-05

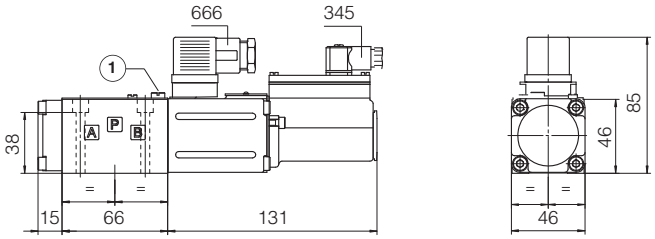

DHZO-T-07

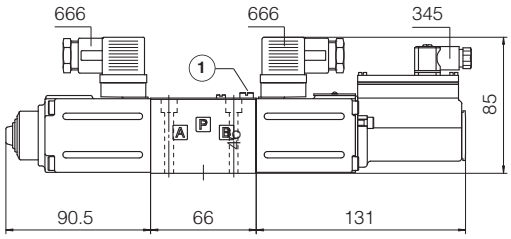

1 = Air bleeding 3

DKZOR-T

ISO 4401: 2005
Mounting surface: 4401-05-04-0-05 (see table P005)
(for /Y surface 4401-05-05-0-05 without X port)

Mass [kg]	
DKZOR-T-15	3,8
DKZOR-T-17	4,5

DKZOR-T-15

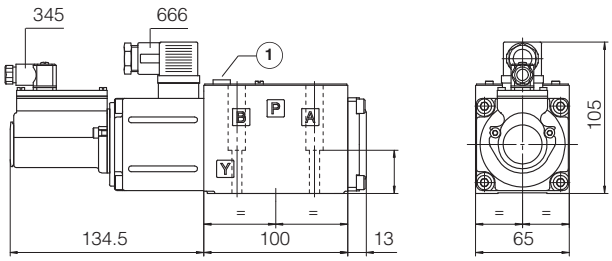

DKZOR-T-17

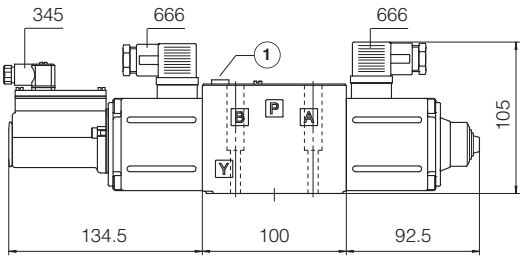

1 = Air bleeding 4 13

Note: for option /B the solenoid and the LVDT transducer are at side of port A

13 RELATED DOCUMENTATION

FS001	Basics for digital electrohydraulics	**GS500**	Programming tools
FS900	Operating and maintenance information for proportional valves	**GS510**	Fieldbus
GS230	E-BM-TEB digital driver	**K800**	Electric and electronic connectors
GS240	E-BM-TES digital driver	**P005**	Mounting surfaces for electrohydraulic valves

Digital proportional directional valves high performance

piloted with on-board driver, two LVDT transducers and positive spool overlap

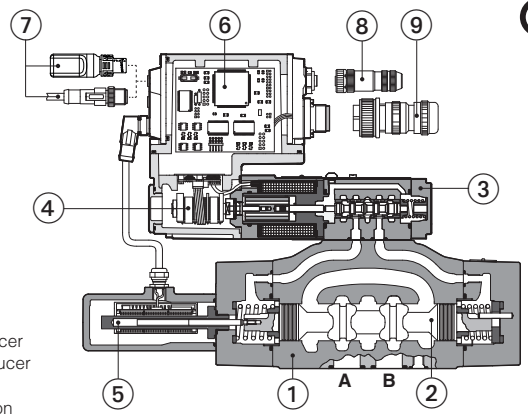

① Valve body
② Main stage Spool
③ Pilot valve
④ Pilot valve LVDT transducer
⑤ Main stage LVDT transducer
⑥ On-board digital driver
⑦ Bluetooth/USB connection
⑧ Fieldbus connectors
⑨ Main connector

DPZO-LES-SN-BP-271

DPZO-LEB, DPZO-LES

Digital proportional directional valves high performance, piloted, specifically designed for high speed closed loop controls.

They are equipped with two LVDT position transducers (pilot valve and main stage) and positive spool overlap for best dynamics in directional controls and not compensated flow regulations.

LEB basic execution with analog reference signal or IO-Link interface for digital reference signals, valve settings, and real-time diagnostics.

LES full execution which includes also optional alternated p/Q controls and fieldbus interfaces for digital reference signals, valve settings, and real-time diagnostics.

Bluetooth/USB connection is always present for valve settings via mobile App and Atos PC software.

Size: **10** ÷ **35** - ISO 4401
Max flow: **180** ÷ **3500 l/min**
Max pressure: **350 bar**

1 MODEL CODE

DPZO	-	LES	-	SN	-	NP	-	2	71	-	L	5	/	*	/	*	/	*	*	/	*

Proportional directional valve, piloted

LEB = basic on-board digital driver
LES = full on-board digital driver

Alternated p/Q controls, see section 10 :
SN = none
Only for LES:
SP = pressure control (1 pressure transducer)
SF = force control (2 pressure transducers)
SL = force control (1 load cell)

IO-Link interface, only for LEB, see section 8 :
NP = Not present **IL** = IO-Link

Fieldbus interfaces, only for LES, see section 9 :
NP = Not present
BC = CANopen **EW** = POWERLINK
BP = PROFIBUS DP **EI** = EtherNet/IP
EH = EtherCAT **EP** = PROFINET RT/IRT

Valve size ISO 4401:
1 = 10 **2** = 16 **4** = 25 **4M** = 27 **6** = 32 **8** = 35

Configuration (1): **Standard** Option **/B**

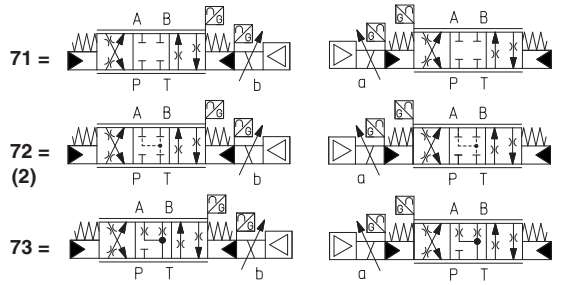

Spool type, regulating characteristics, see section 16 :

L = linear **S** = progressive
DL = differential-linear **D** = differential-progressive
P-A = Q, B-T = Q/2 P-A = Q, B-T = Q/2
P-B = Q/2, A-T = Q P-B = Q/2, A-T = Q

Series number

Seals material, see section 15 :
- = NBR
PE = FKM
BT = NBR low temperature

Safety options TÜV certified - only for LES **(3)**:
U = safe double power supply
K = safe on/off signals
See section 11

SAFETY CERTIFIED

Bluetooth option (2), see section 6 :
T = Bluetooth adapter supplied with the valve

Hydraulic options (3):
B = solenoid with on-board digital driver and LVDT transducer at side of port B of the main stage(side A of pilot valve)
D = internal drain
E = external pilot pressure
G = pressure reducing valve for piloting (standard for DPZO-1)

Electronic options (3), not available for LEB-SN-IL:
C = current feedback for pressure transducer 4÷20mA (only LES-SP, SF, SL)
F = fault signal
I = current reference input and monitor 4÷20mA
Q = enable signal
Z = double power supply (only for LES), enable, fault and monitor signals - 12 pin connector

Spool size:	**3**	**5**	**5**	**5**
Spool type:	L, S, D	L, DL, S, D	L, S, D	L, S, D
Configuration:	71, 73	71, 73	71, 73	72
DPZO-1 =	-	100	-	-
DPZO-2 =	160	250	-	250
DPZO-4 =	-	480	-	480
DPZO-4M =	-	550	-	550
DPZO-6 =	-	-	640	-
DPZO-8 =	-	-	1200	-

Nominal flow (l/min) at Δp 10bar P-T (see section 13)

(1) For regenerative circuit select configuration 71 or 73 with specific spools D9 or L9, see section 2
For p/Q control select configuration 73 with spools L,S,D, or specific spools Q5, V9, see section 3
(2) Only for DPZO sizes 2, 4, 4M with spools L5, S5 or D5 see 16.4
(3) For possible combined options, see section 19

2 SPOOLS SPECIFIC FOR REGENERATIVE CIRCUIT - for valve model code and options, see section 1

DPZO	-	LES	-	SN	-	NP	-	2	71 - L9	/ * / * / *	*	/	*

Configuration and spool:

71-D9

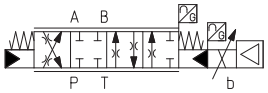

71-L9

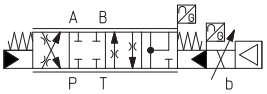

73-D9

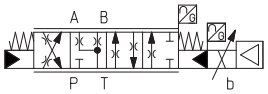

73-L9

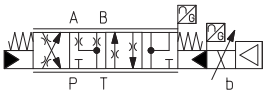

Spool type and size:		D9	L9
DPZO-1	=	100	-
DPZO-2	=	250	250
DPZO-4	=	480	-
DPZO-4M	=	550	-
DPZO-6	=	-	-
DPZO-8	=	-	-

Nominal flow (l/min) at Δp 10bar P-T

D9

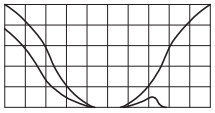

For regenerative circuit (additional external check valve required)
see 16.1 - diagram 26

L9

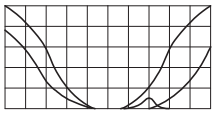

For regenerative circuit internal to the valve
see 16.1 - diagram 27

3 SPOOLS SPECIFIC FOR ALTERNATED p/Q CONTROL - for valve model code and options, see section 1

DPZO	-	LES	-	SN	-	NP	-	2	73 - L9	/ * / * / *	*	/	*

Configuration and spool:

73-Q5

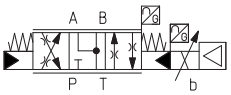

73-V9

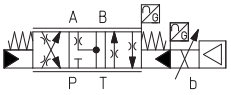

Spool type and size:		V9	Q5
DPZO-1	=	100	100
DPZO-2	=	250	250
DPZO-4	=	480	480
DPZO-4M	=	550	550
DPZO-6	=	640	-
DPZO-8	=	1200	-

Nominal flow (l/min) at Δp 10bar P-T

Q5

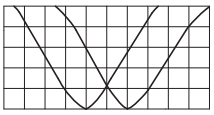

For alternated P/Q control
see 16.1 - diagram 28

V9

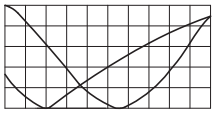

For alternated P/Q control of injection cycle in plastic machinery
see 16.1 - diagram 29

4 GENERAL NOTES

Atos digital proportionals valves are CE marked according to the applicable directives (e.g. Immunity and Emission EMC Directive).
Installation, wirings and start-up procedures must be performed according to the general prescriptions shown in tech table **FS900** and in the user manuals included in the E-SW-SETUP programming software.

5 VALVE SETTINGS AND PROGRAMMING TOOLS - see tech. table **GS500**

5.1 Atos CONNECT mobile App

Free downloadable App for smartphones and tablets which allows quick access to valve main functional parameters and basic diagnostic information via Bluetooth, thus avoiding physical cable connection and significantly reducing commissioning time.
Atos CONNECT supports Atos digital valve drivers equipped with E-A-BTH adapter or with built-in Bluetooth. It does not support valves with p/Q control or axis controls.

Download on the App Store

GET IT ON Google Play

5.2 E-SW-SETUP PC software

Free downloadable software for PC allows to set all valve functional parameters and to access complete diagnostic information of digital valve drivers via Bluetooth/USB service port.
Atos E-SW-SETUP PC software supports all Atos digital valve drivers and it is available at www.atos.com in MyAtos area.

WARNING: drivers USB port is not isolated! For E-C-SB-USB/M12 cable, the use of E-A-SB-USB/OPT isolator adapter is highly recommended for PC protection

Bluetooth or USB connection

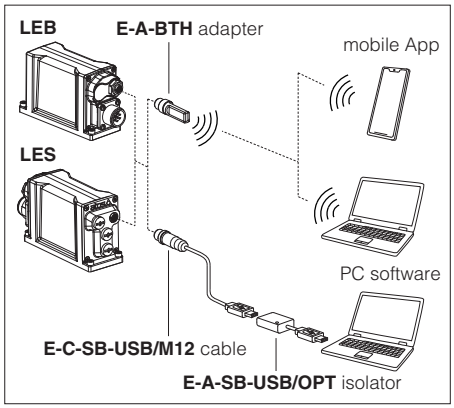

6 BLUETOOTH OPTION - see tech. table **GS500**

T option adds Bluetooth® connectivity to Atos valve drivers thanks to E-A-BTH adapter, which can be left permanently installed on-board, to allow the Bluetooth connection with the valve drivers at any time. E-A-BTH adapter can also be purchased separately and used to connect with any supported Atos digital product.
Bluetooth connection to the valve can be protected against unauthorised access by setting a personal password. The adapter leds visually indicates the status of valve driver and Bluetooth connection.

WARNING: for the list of countries where the Bluetooth adapter has been approved, see tech. table **GS500**
T option is not available for the Indian market, so the Bluetooth adapter must be ordered separately.

7 SMART TUNING

Smart tuning allows to adjust the valve dynamic response in order to match different performance requirements.

The valve is provided with 3 factory settings for the spool control:
- **dynamic** fast response time and high sensitivity for best dynamic performances. Default factory setting for directional valves
- **balanced** average response time and sensitivity suitable for major applications
- **smooth** attenuated response time and sensitivity to improve control stability in critical applications or in environments with electrical disturbances

Smart tuning setting can be switched from Dynamic (default) to Balanced or Smooth via software or fieldbus; if requested, performances can be further customized directly tuning each single control parameter. For details consult related manuals E-MAN-RI-* and Quickstart, see section 28.

For Response time and Bode diagrams see section 16.

8 IO-LINK - only for **LEB**, see tech. table **GS520**

IO-Link allows low cost digital communication between the valve and machine central unit. The valve is directly connected to a port of an IO-Link master (point-to-point connection) via low-cost unshielded cables for digital reference, diagnostic and settings. The IO-Link master works as a hub exchanging this information with the machine central unit via fieldbus.

9 FIELDBUS - only for **LES**, see tech. table **GS510**

Fieldbus allows valve direct communication with machine control unit for digital reference, valve diagnostics and settings. These execution allow to operate the valves through fieldbus or analog signals available on the main connector.

10 ALTERNATED p/Q CONTROLS - only for **LES**, see tech. table **FS500**

S* options add the closed loop control of pressure (**SP**) or force (**SF** and **SL**) to the basic functions of proportional directional valves flow regulation. A dedicated algorithm alternates pressure (force) depending on the actual hydraulic system conditions.
An additional connector is available for transducers to be interfaced to the valve's driver (1 pressure transducer for SP, 2 pressure transducers for SF or 1 load cell for SL). The alternated pressure control (SP) is possible only for specific installation conditions.
Main 12 pin connector is the same as /Z option plus two analog signals specific for the pressure (force) control.

11 SAFETY OPTIONS - only for **LES**

Atos range of proportional directional valves, provides functional safety options **/U** and **/K** ,
designed to accomplish a safety function, intended to reduce the risk in process control systems.

They are **TÜV certified** in compliance to **IEC 61508 up to SIL 3 and ISO 13849 up to category 4, PL e**

Safe double power supply, option **/U**: the driver has separate power supplies for logic and solenoids. The safe condition is reached by cutting the electrical supply to solenoids, while electronics remains active for monitoring functions and fieldbus communication, see tech table **FY100**

Safety function via on/off signals, option **/K**: upon a disable command, the driver checks the spool position and it provides an on/off acknowledgement signal only when the valve is in safe condition, see tech table **FY200**

12 GENERAL CHARACTERISTICS

Assembly position	Any position
Subplate surface finishing to ISO 4401	Acceptable roughness index: Ra ≤0,8, recommended Ra 0,4 – Flatness ratio 0,01/100
MTTFd valves according to EN ISO 13849	75 years, for further details see technical table P007
Ambient temperature range	**Standard** = -20°C ÷ +60°C **/PE** option = -20°C ÷ +60°C **/BT** option = -40°C ÷ +60°C
Storage temperature range	**Standard** = -20°C ÷ +70°C **/PE** option = -20°C ÷ +70°C **/BT** option = -40°C ÷ +70°C
Surface protection	Zinc coating with black passivation, galvanic treatment (driver housing)
Corrosion resistance	Salt spray test (EN ISO 9227) > 200 h
Vibration resistance	See technical table G004
Compliance	CE according to EMC directive 2014/30/EU (Immunity: EN 61000-6-2; Emission: EN 61000-6-3) RoHS Directive 2011/65/EU as last update by 2015/863/EU REACH Regulation (EC) n°1907/2006

13 HYDRAULIC CHARACTERISTICS - based on mineral oil ISO VG 46 at 50 °C

Valve model		**DPZO-*-1**	**DPZO-*-2**		**DPZO-*-4**	**DPZO-*-4M**	**DPZO-*-6**	**DPZO-*-8**
Pressure limits	[bar]	ports **P, A, B, X** = 350; **T** = 250 (10 for option /D); **Y** = 10;						
Spool type and size	standard	**L5, DL5, S5, D5**	**L3, S3, D3**	**L5, DL5, S5, D5**			**L5, S5, D5**	
	regenerative or P/Q	**D9, V9, Q5**		**D9, L9, V9, Q5**	**D9, V9, Q5**		**V9**	
Nominal flow Δp P-T **(1)** [l/min]	Δp= 10 bar	100	160	250	480	550	640	1200
	Δp= 30 bar	160	270	430	830	950	1100	2000
	Max permissible flow	180	400	550	1000	1100	1600	3500
Piloting pressure	[bar]	min. = 25; max = 350 (option /G advisable for pilot pressure > 150 bar)						
Piloting volume	[cm³]	1,4	3,7		9,0	11,3	21,6	39,8
Piloting flow **(2)**	[l/min]	1,7	3,7		6,8	8	14,4	20
Leakage **(3)**	Pilot [cm³/min]	100 / 300	100 / 300		200 / 500	200 / 600	900 / 2800	900 / 2800
	Main stage [l/min]	0,15 / 0,5	0,2 / 0,6		0,3 / 1,0	0,3 / 1,0	1,0 / 3,0	1,2 / 3,6
Response time **(4)**	[ms]	≤ 50	≤ 60		≤ 80	≤ 85	≤ 90	≤ 120
Hysteresis		≤ 0,1 [% of max regulation]						
Repeatability		± 0,1 [% of max regulation]						
Thermal drift		zero point displacement < 1% at ΔT = 40°C						

(1) For different Δp, the max flow is in accordance to the diagrams in section 16.2
(2) With step reference input signal 0 ÷100 %
(3) At p = 100/350 bar
(4) 0-100% step signal see detailed diagrams in section 16.3

14 ELECTRICAL CHARACTERISTICS

Power supplies	Nominal : +24 VDC Rectified and filtered : VRMS = 20 ÷ 32 VMAX (ripple max 10 % VPP)				
Max power consumption	50 W				
Max. solenoid current	2,6 A				
Coil resistance R at 20°C	3 ÷ 3,3 Ω				
Analog input signals	Voltage: range ±10 VDC (24 VMAX tolerant) Input impedance: Ri > 50 kΩ Current: range ±20 mA Input impedance: Ri = 500 Ω				
Monitor outputs	Output range: voltage ±10 VDC @ max 5 mA current ±20 mA @ max 500 Ω load resistance				
Enable input	Range: 0 ÷ 5 VDC (OFF state), 9 ÷ 24 VDC (ON state), 5 ÷ 9 VDC (not accepted); Input impedance: Ri > 10 kΩ				
Fault output	Output range: 0 ÷ 24 VDC (ON state > [power supply - 2 V] ; OFF state < 1 V) @ max 50 mA; external negative voltage not allowed (e.g. due to inductive loads)				
Pressure/Force transducer power supply (only for SP, SF, SL)	+24VDC @ max 100 mA (E-ATR-8 see tech table **GS465**)				
Alarms	Solenoid not connected/short circuit, cable break with current reference signal, over/under temperature, valve spool transducer malfunctions, alarms history storage function				
Insulation class	H (180°) Due to the occurring surface temperatures of the solenoid coils, the European standards ISO 13732-1 and EN982 must be taken into account				
Protection degree to DIN EN60529	IP66 / IP67 with mating connectors				
Duty factor	Continuous rating (ED=100%)				
Tropicalization	Tropical coating on electronics PCB				
Additional characteristics	Short circuit protection of solenoid's current supply; 3 leds for diagnostic (only for LES); spool position control (SN) or pressure/force control (SP, SF, SL) by P.I.D. with rapid solenoid switching; protection against reverse polarity of power supply				
Communication interface	USB Atos ASCII coding	IO-Link Interface and System Specification 1.1.3	CANopen EN50325-4 + DS408	PROFIBUS DP EN50170-2/IEC61158	EtherCAT POWERLINK EtherNet/IP PROFINET IO RT/IRT IEC 61158
Communication physical layer	not insulated USB 2.0+USB OTG	SDCI class port B	optical insulated CAN ISO11898	optical insulated RS485	Fast Ethernet, insulated 100 Base TX
Recommended wiring cable	LiYCY shielded cables, see section 24				

Note: a maximum time of 800 ms (depending on communication type) has to be considered between the driver energizing with the 24 VDC power supply and when the valve is ready to operate. During this time the current to the valve coils is switched to zero.

15 SEALS AND HYDRAULIC FLUIDS - for other fluids not included in below table, consult our technical office

Seals, recommended fluid temperature	NBR seals (standard) = -20°C ÷ +60°C, with HFC hydraulic fluids = -20°C ÷ +50°C FKM seals (/PE option) = -20°C ÷ +80°C NBR low temp. seals (/BT option) = -40°C ÷ +60°C, with HFC hydraulic fluids = -20°C ÷ +50°C			
Recommended viscosity	20÷100 mm²/s - max allowed range 15 ÷ 380 mm²/s			
Max fluid contamination level — normal operation	ISO4406 class 18/16/13 NAS1638 class 7		see also filter section at www.atos.com or KTF catalog	
Max fluid contamination level — longer life	ISO4406 class 16/14/11 NAS1638 class 5			
Hydraulic fluid	**Suitable seals type**	**Classification**	**Ref. Standard**	
Mineral oils	NBR, FKM, NBR low temp.	HL, HLP, HLPD, HVLP, HVLPD	DIN 51524	
Flame resistant without water	FKM	HFDU, HFDR	ISO 12922	
Flame resistant with water	NBR, NBR low temp.	HFC		

16 DIAGRAMS (based on mineral oil ISO VG 46 at 50 °C)

16.1 Regulation diagrams (values measure at Δp 10 bar P-T)

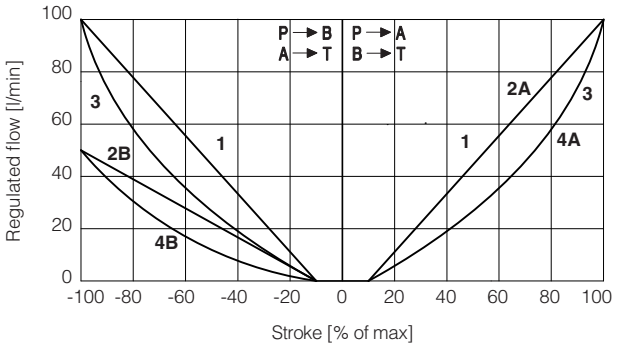

DPZO-1:
1 = L5 **2A** = DL5 (P → A, A → T)
3 = S5 **2B** = DL5 (P → B, B → T)
4A = D5 (P → A, A → T)
4B = D5 (P → B, B → T)

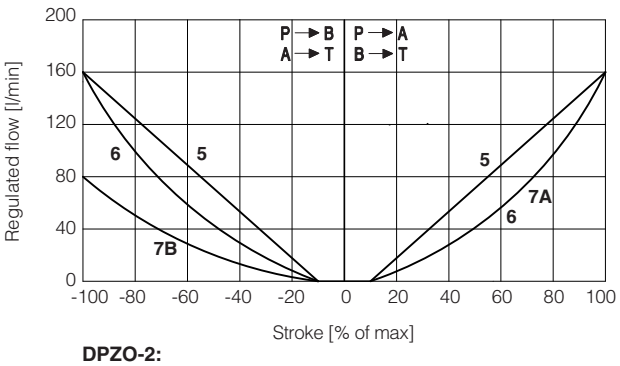

DPZO-2:
5 = L3 **7A** = D3 (P → A, A → T)
6 = S3 **7B** = D3 (P → B, B → T)

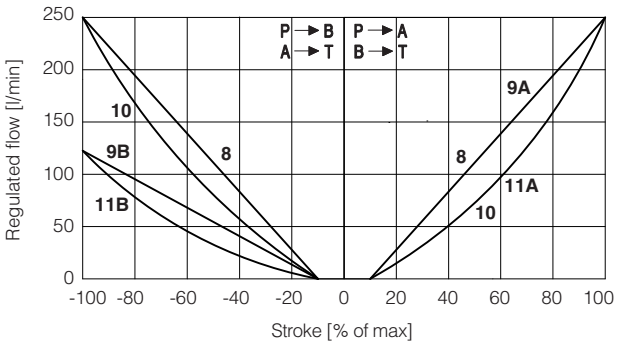

DPZO-2:
8 = L5 **9A** = DL5 (P → A, A → T)
10 = S5 **9B** = DL5 (P → B, B → T)
11A = D5 (P → A, A → T)
11B = D5 (P → B, B → T)

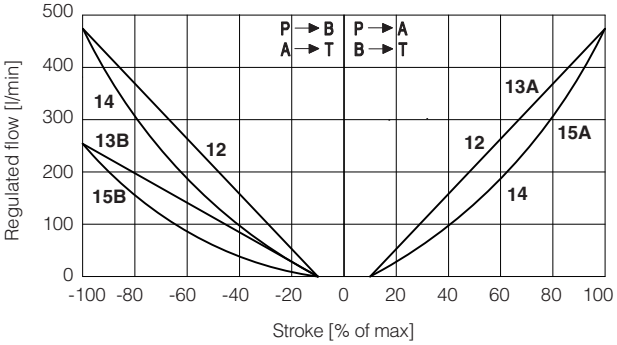

DPZO-4:
12 = L5 **13A** = DL5 (P → A, A → T)
14 = S5 **13B** = DL5 (P → B, B → T)
15A = D5 (P → A, A → T)
15B = D5 (P → B, B → T)

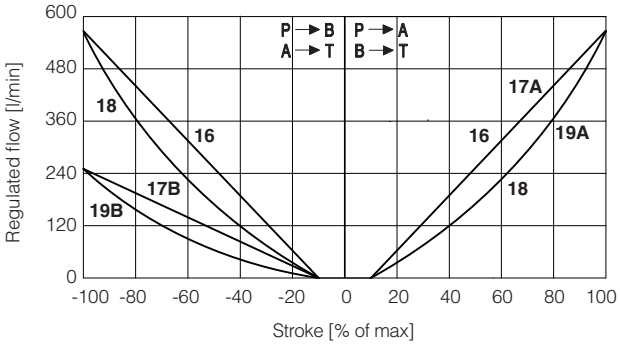

DPZO-4M:
16 = L5 **17A** = DL5 (P → A, A → T)
18 = S5 **17B** = DL5 (P → B, B → T)
19A = D5 (P → A, A → T)
19B = D5 (P → B, B → T)

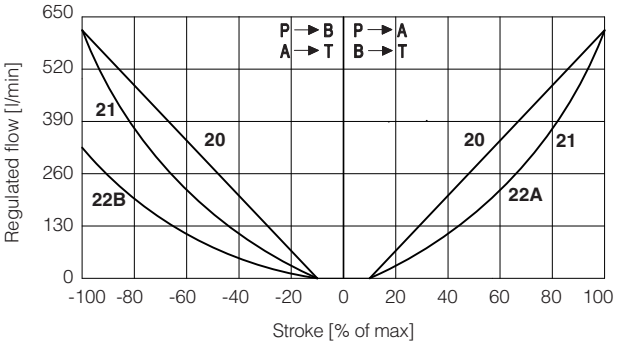

DPZO-6:
20 = L5 **22A** = D5 (P → A, A → T)
21 = S5 **22B** = D5 (P → B, B → T)

Note:
Hydraulic configuration vs. reference signal (standard and option /B)

Reference signal $\left.\begin{matrix} 0 \div +10\ V \\ 12 \div 20\ mA \end{matrix}\right\}$ P → A / B → T

Reference signal $\left.\begin{matrix} 0 \div -10\ V \\ 12 \div 4\ mA \end{matrix}\right\}$ P → B / A → T

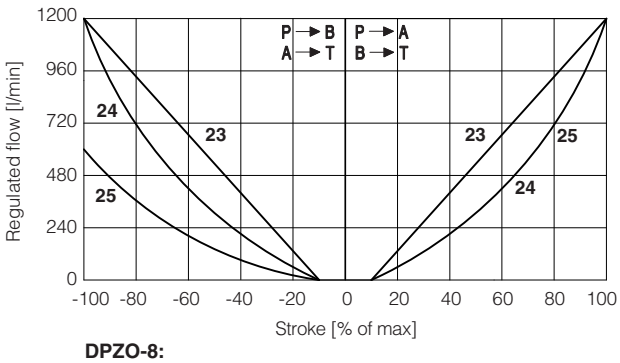

DPZO-8:
23 = L5 **24** = S5
25 = D5

26 = differential - regenerative spool **D9**
(not available for valve size 32 and 35)

D9 spool type with a fourth position specific to regenerative circuit, performed by means of an additional external check valve.

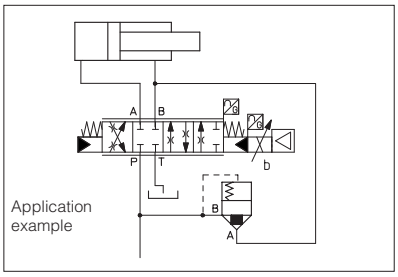

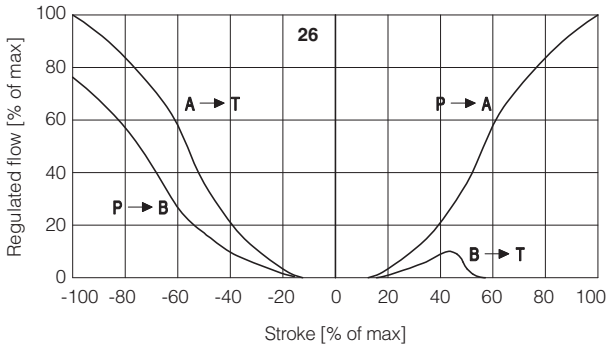

27 = linear - internal regenerative spool **L9**
(available only for valve size 16)

L9 spool type with a fourth position specific to perform a regenerative circuit internal to the valve.

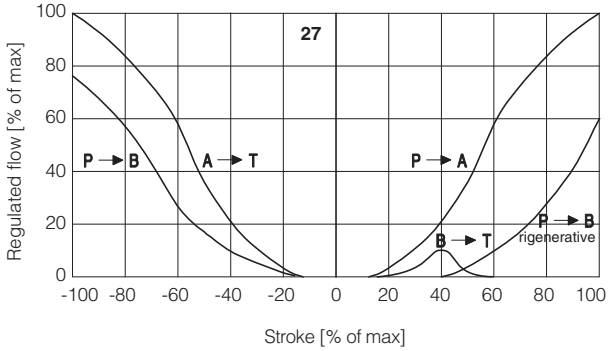

28 = linear spool **Q5**
(not available for valve size 32 and 35)

Q5 spool type is specific for alternate P/Q controls in combination with /S* option of digital on-board drivers, (see tech. table **FS500**).
It allows to control the pressure in A port or B port and it provides a safety central position (A-T/B-T) to depressurize the actuator chambers.
The strong meter-in characteristic makes the spool suitable for both pressure control and motion regulations in several applications.

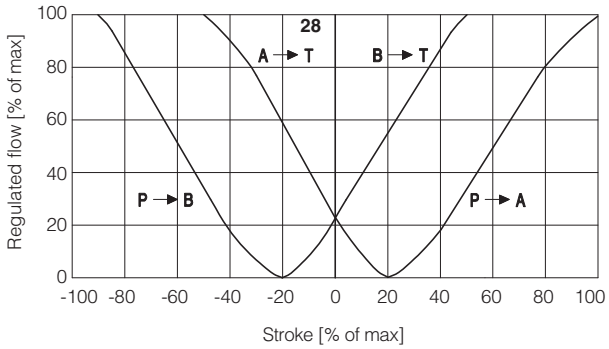

29 = differential - progressive spool **V9**

V9 spool type is specific for alternate P/Q controls in combination with S* option of digital on-board drivers, (see tech. table **FS500**).
This spool is specially designed to manage the whole injection cycle in plastic machinery, thanks to the following specific features:

- strong meter-in characteristic to allow the pressure control in A port during the holding pressure (P-A) and the plasticizing (A-T) phases
- safety central position (A-T/B-T) to depressurize the actuator chambers
- large A-T and B-T flow capability, required during the plasticizing phase, to discharge big volumes from high differential injection cylinders with low pressure drops and permitting the contemporary oil suction from tank

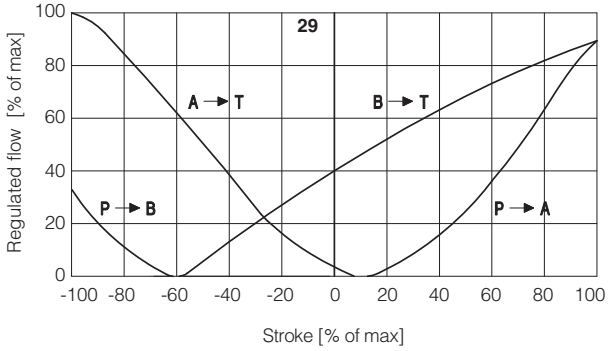

16.2 Operating diagrams

Flow /Δp diagram

stated at 100% of spool stroke

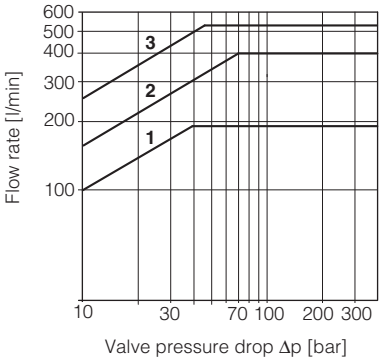

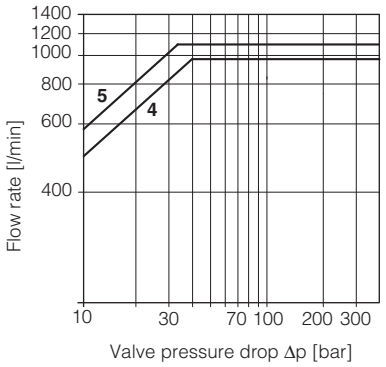

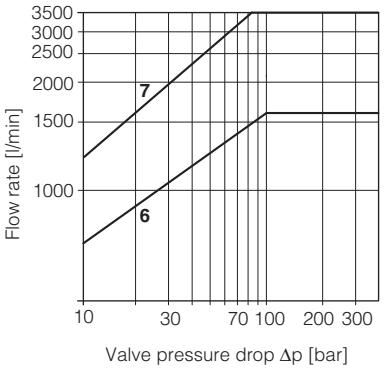

DPZO-1:
1 = spools L5, S5, D5, DL5, D9, V9, Q5

DPZO-2:
2 = spools L3, S3, D3
3 = spools L5, S5, D5, DL5, D9, L9, V9, Q5

DPZO-4:
4 = spools L5, S5, D5, DL5, D9, V9, Q5

DPZO-4M:
5 = spools L5, S5, D5,DL5, D9, V9, Q5

DPZO-6:
6 = L5, S5, D5, V9

DPZO-8:
7 = L5, S5, D5, V9

16.3 Response time

The response times in below diagrams are measured at different steps of the reference input signal. They have to be considered as average values.

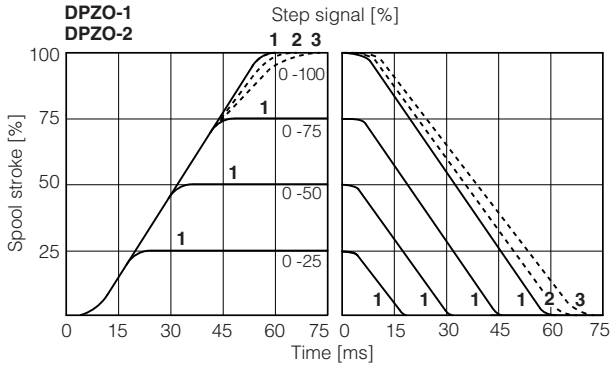

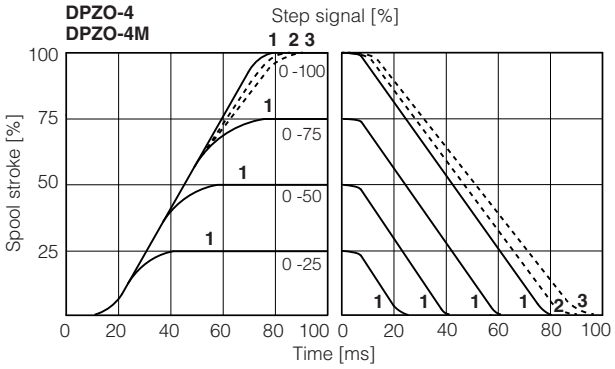

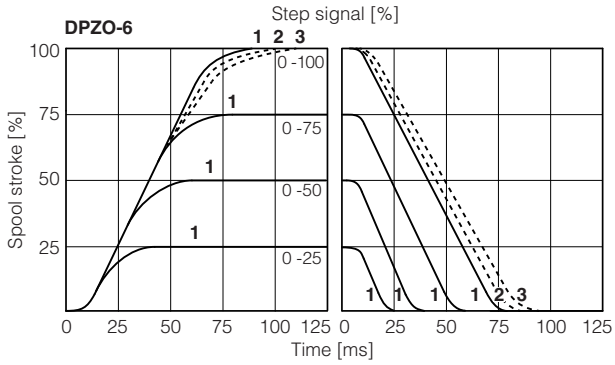

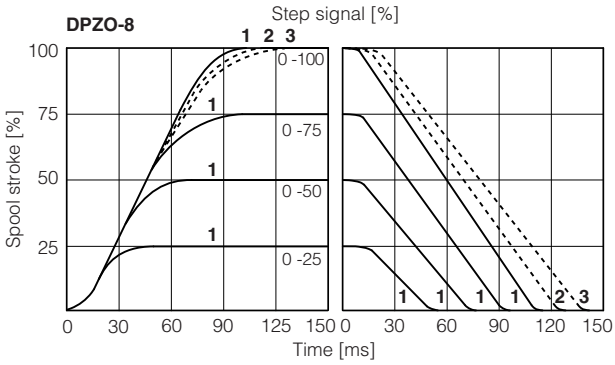

1 = dynamic **2** = balanced (*) **3** = smooth (*)

(*) Response time is represented only for 0-100% step; for intermediate steps, the response time increment of presets 2 (balanced) and 3 (smooth) with respect to the preset 1 (dynamic) is proportional to the step amplitude of the reference input signal

16.4 Configuration 72

Only for **DPZO** sizes **2**, **4**, **4M** with spools **L5** or **S5**: in central position the leakages P-A and P-B are drained to tank, avoiding the drift of cylinders with differential areas.

17 HYDRAULIC OPTIONS

B = Solenoid, on-board digital driver and LVDT transducer at side of port B of the main stage (side A of pilot valve). For hydraulic configuration vs reference signal, see 16.1

D = Internal drain (through port T).
Pilot and drain configuration can be modified as shown in the functional scheme here aside. For detailed view of plugs position, see section 25
The valve's standard configuration provides internal pilot and external drain.

E = External pilot (through port X).
Pilot and drain configuration can be modified as shown in the functional scheme here aside. For detailed view of plugs position, see section 25
The valve's standard configuration provides internal pilot and external drain.

G = Pressure reducing valve ③ with fixed setting, installed between pilot valve and main body. Reduced pressure setting:
DPZO-1, DPZO-2, DPZO-4(M), DPZO-6 and DPZO-8 = **40 bar**

It is advisable for valves with internal pilot in case of system pressure higher than 150 bar.
Pressure reducing valve ③ is standard for DPZO-1, for other sizes add /G option.

Functional Scheme - example of configuration 71

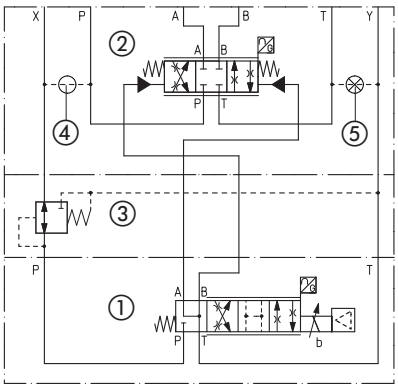

① Pilot valve
② Main stage
③ Pressure reducing valve
④ Plug to be added for external pilot trough port X
⑤ Plug to be removed for internal drain through port T

18 ELECTRONIC OPTIONS - not available for LEB-SN-IL

F = This option permits to monitor the eventual fault condition of the driver, as for example the solenoid short circuit/not connected, reference signal cable broken for option /I, spool position transducer broken, etc. - see 20.9 for signal specifications.

I = This option provides 4 ÷ 20 mA current reference and monitor signals, instead of the standard ±10 VDC.
Input signal can be reconfigured via software selecting between voltage and current, within a maximum range of ±10 VDC or ±20 mA.
It is normally used in case of long distance between the machine control unit and the valve or where the reference signal can be affected by electrical noise; the valve functioning is disabled in case of reference signal cable breakage.

Q = This option permits to inhibit the valve function without removing the power supply to the driver. Upon disable command the current to the solenoid is zeroed and the valve's spool moves to rest position.
The option /Q is suggested for all cases where the valve has to be frequently inhibited during the machine cycle – see 20.7 for signal specifications.

Z = This option provides, on the 12 pin main connector, the following additional features:
Fault output signal - see above option **/F**
Enable input signal - see above option **/Q**
Repeat enable output signal - only for **LEB-SN-NP** (see 20.8)
Power supply for driver's logics and communication - only for **LES** (see 20.2)

C = This option is available to connect pressure (force) transducers with 4 ÷ 20 mA current output signal, instead of the standard ±10 VDC.
Input signal can be reconfigured via software selecting between voltage and current, within a maximum range of ±10 VDC or ±20 mA.

19 POSSIBLE COMBINED OPTIONS

Hydraulic options:
all combination possible

Electronic options - Standard versions:		**Electronic options** - Safety certified versions:	
LEB-SN, **LES-SN**	**LES-SP, SF, SL**	**LES-SN**	**LES-SP, SF, SL**
/FI, /IQ, /IZ	/CI	/I/U, /I/K	/C/U, /I/U, /CI/U, /C/K, /I/K, /CI/K

Note: **/T** Bluetooth adapter option can be combined with all other options

20 POWER SUPPLY AND SIGNALS SPECIFICATIONS

Generic electrical output signals of the valve (e.g. fault or monitor signals) must not be directly used to activate safety functions, like to switch-ON/OFF the machine's safety components, as prescribed by the European standards (Safety requirements of fluid technology systems and components-hydraulics, ISO 4413).

For **LEB-SN-IL** signals see section 21

For certified safety options: **/U** see tech. table **FY100** and **/K** see tech. table **FY200**

20.1 Power supply (V+ and V0)

The power supply must be appropriately stabilized or rectified and filtered: apply at least a 10000 μF/40 V capacitance to single phase rectifiers or a 4700 μF/40 V capacitance to three phase rectifiers. In case of separate power supply see 20.2.

⚠ A safety fuse is required in series to each power supply: 2,5 A time lag fuse.

20.2 Power supply for driver's logic and communication (VL+ and VL0) - only for **LES** with **/Z** option and for **LES-SP, SF, SL** with fieldbus

The power supply for driver's logic and communication must be appropriately stabilized or rectified and filtered: apply at least a 10000 μF/40 V capacitance to single phase rectifiers or a 4700 μF/40 V capacitance to three phase rectifiers.

The separate power supply for driver's logic on pin 9 and 10, allow to remove solenoid power supply from pin 1 and 2 maintaining active the diagnostics, USB and fieldbus communications.

⚠ A safety fuse is required in series to each driver's logic and communication power supply: 500 mA fast fuse.

20.3 Flow reference input signal (Q_INPUT+)

The driver controls in closed loop the valve spool position proportionally to the external reference input signal.

Reference input signal is factory preset according to selected valve code, defaults are ±10 VDC for standard and 4 ÷ 20 mA for /I option.

Input signal can be reconfigured via software selecting between voltage and current, within a maximum range of ±10 VDC or ± 20 mA.

Drivers with fieldbus interface can be software set to receive reference signal directly from the machine control unit (fieldbus reference).

Analog reference input signal can be used as on-off commands with input range 0 ÷ 24VDC.

20.4 Pressure or force reference input signal (F_INPUT+) - only for **LES-SP, SF, SL**

Functionality of F_INPUT+ signal (pin 7), is used as reference for the driver pressure/force closed loop (see tech. table **FS500**).

Reference input signal is factory preset according to selected valve code, defaults are ±10 VDC for standard and 4 ÷ 20 mA for /I option.

Input signal can be reconfigured via software selecting between voltage and current, within a maximum range of ±10 VDC or ± 20 mA.

Drivers with fieldbus interface can be software set to receive reference signal directly by the machine control unit (fieldbus reference).

Analog reference input signal can be used as on-off commands with input range 0 ÷ 24VDC.

20.5 Flow monitor output signal (Q_MONITOR) - not for **/F**

The driver generates an analog output signal proportional to the actual spool position of the valve; the monitor output signal can be software set to show other signals available in the driver (e.g. analog reference, fieldbus reference, pilot spool position).

Monitor output signal is factory preset according to selected valve code, defaults are ±10 VDC for standard and 4 ÷ 20 mA for /I option.

Output signal can be reconfigured via software selecting between voltage and current, within a maximum range of ±10 VDC or ± 20 mA.

20.6 Pressure or force monitor output signal (F_MONITOR) - only for **LES-SP, SF, SL**

The driver generates an analog output signal proportional to alternated pressure/force control; the monitor output signal can be software set to show other signals available in the driver (e.g. analog reference, force reference).

Monitor output signal is factory preset according to selected valve code, defaults are ±10 VDC for standard and 4 ÷ 20 mA for /I option.

Output signal can be reconfigured via software selecting between voltage and current, within a maximum range of ±10 VDC or ± 20 mA.

20.7 Enable input signal (ENABLE) - not for standard and **/F**

To enable the driver, supply a 24 VDC on pin 3 (pin C): Enable input signal allows to enable/disable the current supply to the solenoid, without removing the electrical power supply to the driver; it is used to active the communication and the other driver functions when the valve must be disabled for safety reasons. This condition **does not comply** with norms IEC 61508 and ISO 13849.

Enable input signal can be used as generic digital input by software selection.

20.8 Repeat enable output signal (R_ENABLE) - only for **LEB-SN-NP** with **/Z** option

Repeat enable is used as output repeater signal of enable input signal (see 20.7).

20.9 Fault output signal (FAULT) - not for standard and **/Q**

Fault output signal indicates fault conditions of the driver (solenoid short circuits/not connected, reference signal cable broken for 4 ÷ 20 mA input, spool position transducer cable broken, etc.). Fault presence corresponds to 0 VDC, normal working corresponds to 24 VDC.

Fault status is not affected by the Enable input signal. Fault output signal can be used as digital output by software selection.

20.10 Remote pressure/force transducer input signal - only for **LES-SP, SF, SL**

Analog remote pressure transducers or load cell can be directly connected to the driver (see 22.5).

Analog input signal is factory preset according to selected valve code, defaults are ±10 VDC for standard and 4 ÷ 20 mA for /C option.

Input signal can be reconfigured via software selecting between voltage and current, within a maximum range of ±10 VDC or ± 20 mA.

Refer to pressure/force transducer characteristics to select the transducer type according to specific application requirements (see tech table **FS500**).

20.11 Multiple PID selection (D_IN0 and D_IN1) - only **NP** execution for **LES-SP, SF, SL**

Two on-off input signals are available on the main connector to select one of the four pressure (force) PID parameters setting, stored into the driver.

Switching the active setting of pressure PID during the machine cycle allows to optimize the system dynamic response in different hydraulic working conditions (volume, flow, etc.).

Supply a 24 VDC or a 0 VDC on pin 9 and/or pin 10, to select one of the PID settings as indicated by binary code table at side. Gray code can be selected by software.

	PID SET SELECTION			
PIN	**SET 1**	**SET 2**	**SET 3**	**SET 4**
9	0	24 VDC	0	24 VDC
10	0	0	24 VDC	24 VDC

21 IO-LINK SIGNALS SPECIFICATIONS - only for **LEB-SN-IL**

21.1 Power supply for IO-Link communication (L+ and L-)

The IO-Link master provides dedicated 24 VDC power supply for IO-Link communication.
Maximum power consumption: 2 W
Internal electrical isolation of power L+, L- from P24, N24

21.2 Power supply for driver's logic and valve regulation (P24 and N24)

The IO-Link master provides dedicated 24 VDC power supply for valve regulation, logics and diagnostics.
Maximum power consumption: 50 W
Internal electrical isolation of power P24, N24 from L+, L-

21.3 IO-Link data line (C/Q)

C/Q signal is used to establish communication between IO-Link master and valve.

22 ELECTRONIC CONNECTIONS

For electronic connection of certified safety options **/U** see tech. table **FY100** and **/K** see tech. table **FY200**

22.1 Main connector signals - 7 pin (A1) **Standard**, **/Q** and **/F** options

PIN	Standard	/Q	/F	TECHNICAL SPECIFICATIONS	NOTES
A	**V+**			Power supply 24 VDC	Input - power supply
B	**V0**			Power supply 0 VDC	Gnd - power supply
C	**AGND**		**AGND**	Analog ground	Gnd - analog signal
		ENABLE		Enable (24 VDC) or disable (0 VDC) the valve, referred to V0	Input - on/off signal
D	**Q_INPUT+**			Flow reference input signal: ±10 VDC / ±20 mA maximum range Defaults are ±10 VDC for standard and 4 ÷ 20 mA for /I option	Input - analog signal **Software selectable**
E	**INPUT-**			Negative reference input signal for Q_INPUT+	Input - analog signal
F	**Q_MONITOR** referred to: AGND V0			Flow monitor output signal: ±10 VDC / ±20 mA maximum range Defaults are ±10 VDC for standard and 4 ÷ 20 mA for /I option	Output - analog signal **Software selectable**
			FAULT	Fault (0 VDC) or normal working (24 VDC)	Output - on/off signal
G	**EARTH**			Internally connected to the driver housing	

22.2 Main connector signals - 12 pin (A2) **/Z** option and **LES-SP, SF, SL**

PIN	LEB-SN /Z	LES-SN /Z	LES-SP, SF, SL Fieldbus	LES-SP, SF, SL NP	TECHNICAL SPECIFICATIONS	NOTES
1	**V+**				Power supply 24 VDC	Input - power supply
2	**V0**				Power supply 0 VDC	Gnd - power supply
3	**ENABLE** referred to: V0	VL0	VL0	V0	Enable (24 VDC) or disable (0 VDC) the valve	Input - on/off signal
4	**Q_INPUT+**				Flow reference input signal: ±10 VDC / ±20 mA maximum range Defaults are ±10 VDC for standard and 4 ÷ 20 mA for /I option	Input - analog signal **Software selectable**
5	**INPUT-**				Negative reference input signal for Q_INPUT+ and F_INPUT+	Input - analog signal
6	**Q_MONITOR** referred to: AGND	VL0	VL0	V0	Flow monitor output signal: ±10 VDC / ±20 mA maximum range Defaults are ±10 VDC for standard and 4 ÷ 20 mA for /I option	Output - analog signal **Software selectable**
7	**AGND**				Analog ground	Gnd - analog signal
		NC			Do not connect	
			F_INPUT+		Pressure/Force reference input signal: ±10 VDC / ±20 mA maximum range Defaults are ±10 VDC for standard and 4 ÷ 20 mA for /I option	Input - analog signal **Software selectable**
8	**R_ENABLE**				Repeat enable, output repeater signal of enable input, referred to V0	Output - on/off signal
		NC			Do not connect	
			F_MONITOR referred to: VL0	V0	Pressure/Force monitor output signal: ±10 VDC / ±20 mA maximum range Defaults are ±10 VDC for standard and 4 ÷ 20 mA for /I option	Output - analog signal **Software selectable**
9	**NC**				Do not connect	
		VL+			Power supply 24 VDC for driver's logic and communication	Input - power supply
				D_IN0	Multiple pressure/force PID selection, referred to V0	Input - on/off signal
10	**NC**				Do not connect	
		VL0			Power supply 0 VDC for driver's logic and communication	Gnd - power supply
				D_IN1	Multiple pressure/force PID selection (not available for SF), referred to V0	Input - on/off signal
11	**FAULT** referred to: V0	VL0	VL0	V0	Fault (0 VDC) or normal working (24 VDC)	Output - on/off signal
PE	**EARTH**				Internally connected to the driver housing	

Note: do not disconnect VL0 before VL+ when the driver is connected to PC USB port

22.3 IO-Link connector signals - M12 - 5 pin - Coding A, port class B (A) only for **LEB-SN-IL**

PIN	SIGNAL	TECHNICAL SPECIFICATIONS	NOTES
1	**L+**	Power supply 24 VDC for IO-Link communication	Input - power supply
2	**P24**	Power supply 24 VDC for valve regulation, logics and diagnostics	Input - power supply
3	**L-**	Power supply 0 VDC for IO-Link communication	Gnd - power supply
4	**C/Q**	IO-Link data line	Input / Output - signal
5	**N24**	Power supply 0 VDC for valve regulation, logics and diagnostics	Gnd - power supply

Note: L+, L- and P24, N24 are electrically isolated

22.4 Communications connectors (B) - (C)

(B) **USB connector - M12 - 5 pin** always present		
PIN	**SIGNAL**	**TECHNICAL SPECIFICATION** (1)
1	**+5V_USB**	Power supply
2	**ID**	Identification
3	**GND_USB**	Signal zero data line
4	**D-**	Data line -
5	**D+**	Data line +

(C1) (C2) **BC fieldbus execution, connector - M12 - 5 pin**		
PIN	**SIGNAL**	**TECHNICAL SPECIFICATION** (1)
1	**CAN_SHLD**	Shield
2	**not used**	(C1) - (C2) pass-through connection (2)
3	**CAN_GND**	Signal zero data line
4	**CAN_H**	Bus line (high)
5	**CAN_L**	Bus line (low)

(C1) (C2) **BP fieldbus execution, connector - M12 - 5 pin**		
PIN	**SIGNAL**	**TECHNICAL SPECIFICATION** (1)
1	**+5V**	Termination supply signal
2	**LINE-A**	Bus line (high)
3	**DGND**	Data line and termination signal zero
4	**LINE-B**	Bus line (low)
5	**SHIELD**	

(C1) (C2) **EH, EW, EI, EP fieldbus execution, connector - M12 - 4 pin**		
PIN	**SIGNAL**	**TECHNICAL SPECIFICATION** (1)
1	**TX+**	Transmitter
2	**RX+**	Receiver
3	**TX-**	Transmitter
4	**RX-**	Receiver
Housing	**SHIELD**	

(1) Shield connection on connector's housing is recommended

(2) Pin 2 can be fed with external +5V supply of CAN interface

22.5 Remote pressure/force transducer connector - M12 - 5 pin - only for **SP, SF, SL** (D)

PIN	SIGNAL	TECHNICAL SPECIFICATION	NOTES	(D1) **SP, SL - Single transducer** (1)		(D2) **SF - Double transducers** (1)	
				Voltage	**Current**	**Voltage**	**Current**
1	**VF +24V**	Power supply +24VDC	Output - power supply	Connect	Connect	Connect	Connect
2	**TR1**	1st signal transducer: ±10 VDC / ±20 mA maximum range	Input - analog signal **Software selectable**	Connect	Connect	Connect	Connect
3	**AGND**	Common gnd for transducer power and signals	Common gnd	Connect	/	Connect	/
4	**TR2**	2nd signal transducer: ±10 VDC / ±20 mA maximum range	Input - analog signal **Software selectable**	/	/	Connect	Connect
5	**NC**	Not connect		/	/	/	/

(1) Single/double transducer configuration is software selectable

Remote pressure transducers connection - example

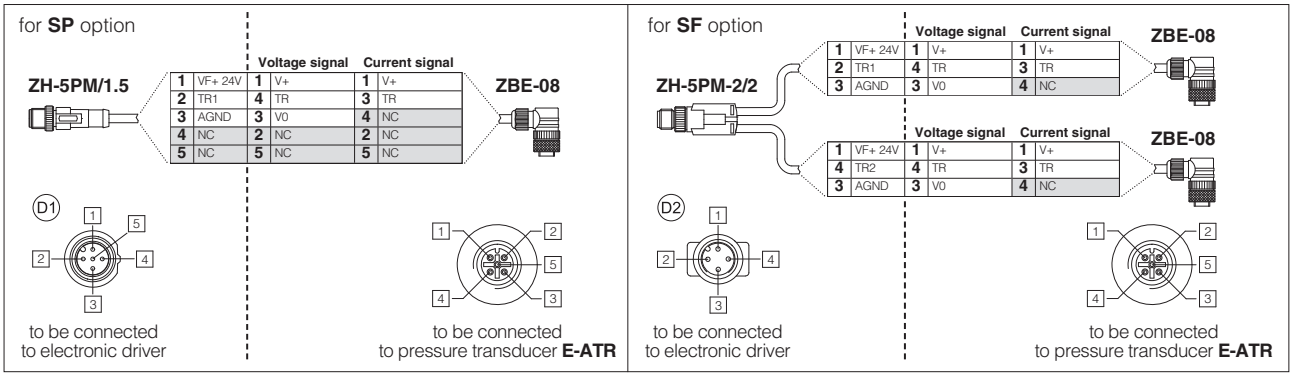

Note: pin layout always referred to driver's view

22.6 LEB-SN-NP connections layout

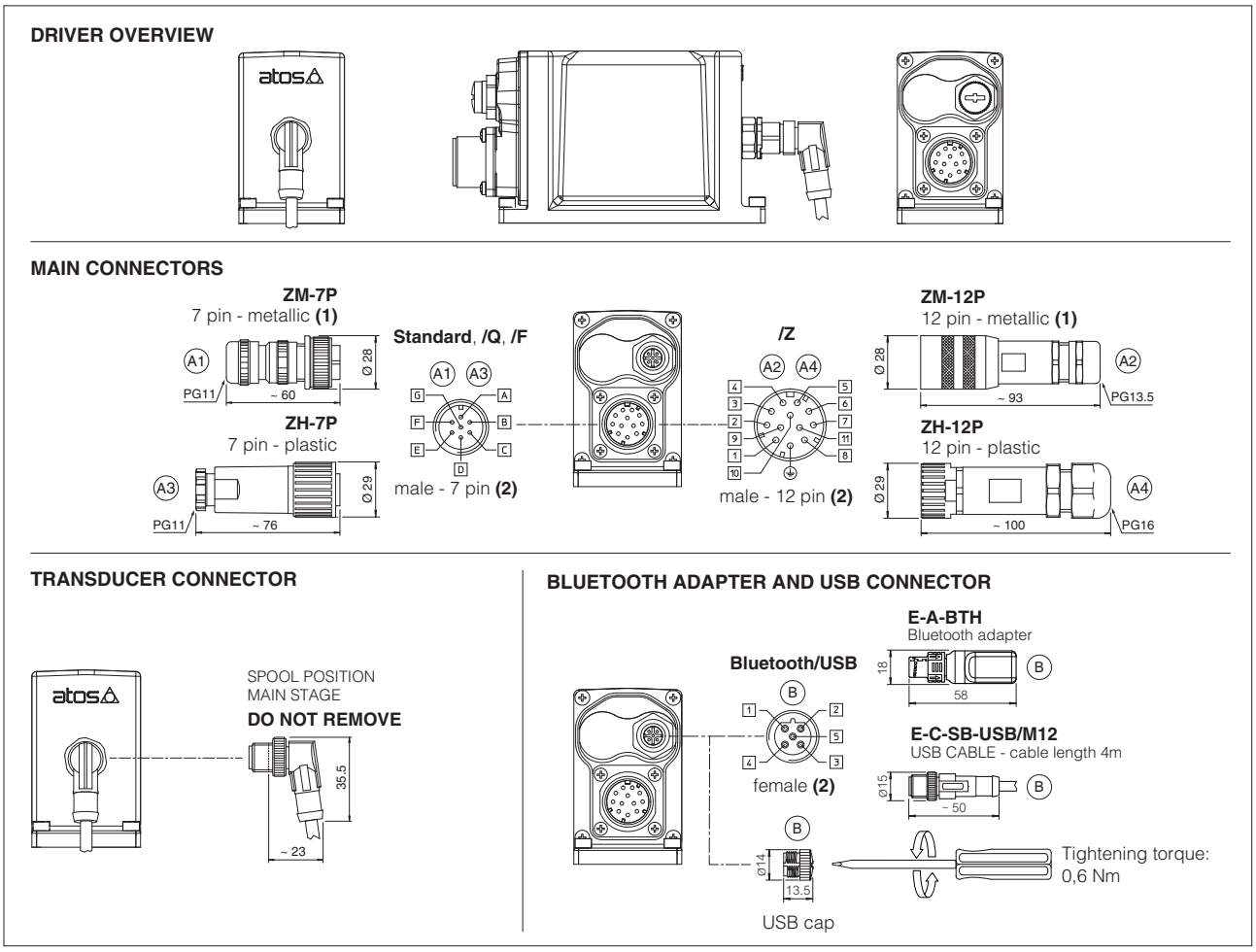

(1) Use of metallic connectors is strongly recommended in order to fulfill EMC requirements **(2)** Pin layout always referred to driver's view

22.7 LEB-SN-IL connections layout

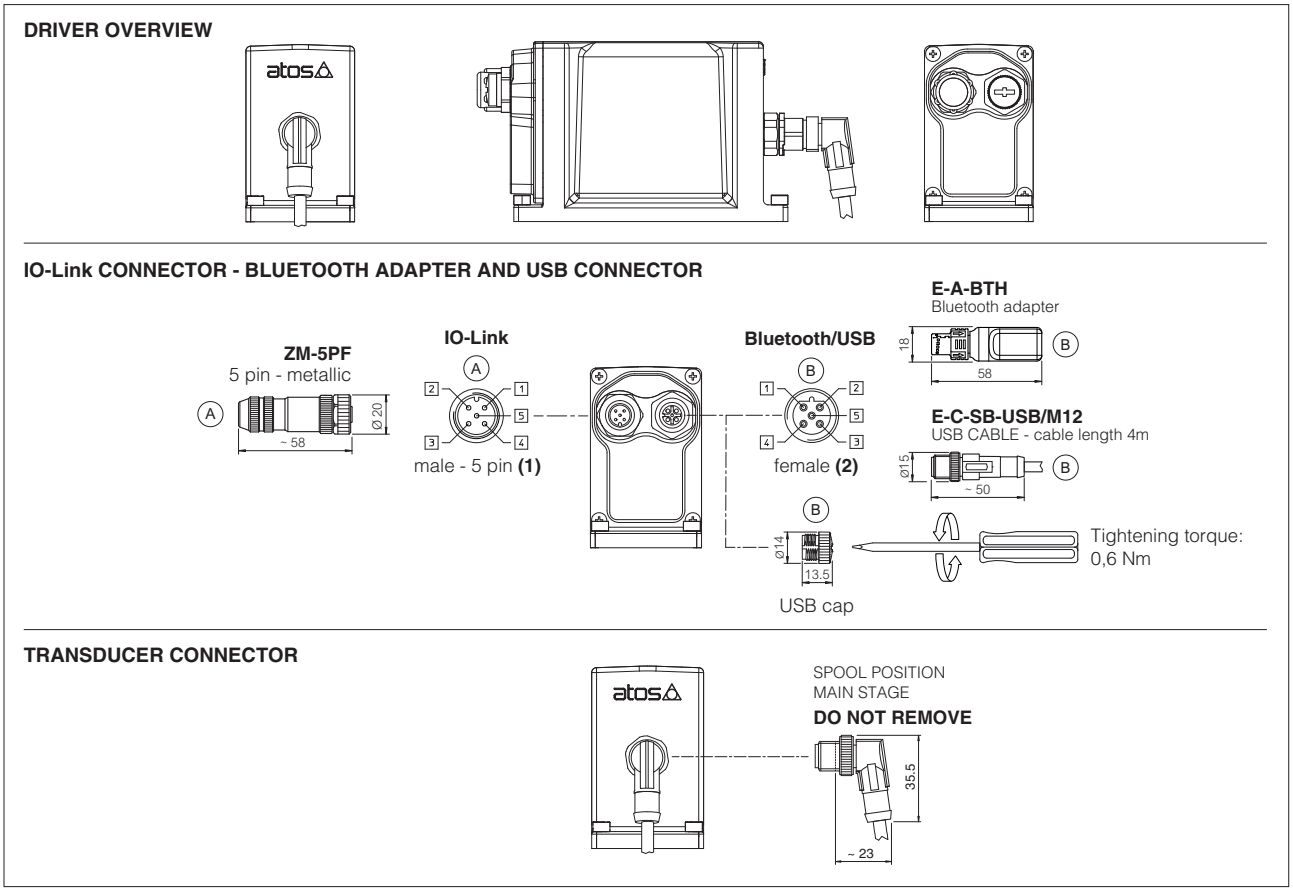

(1) Pin layout always referred to driver's view

22.8 LES connections layout

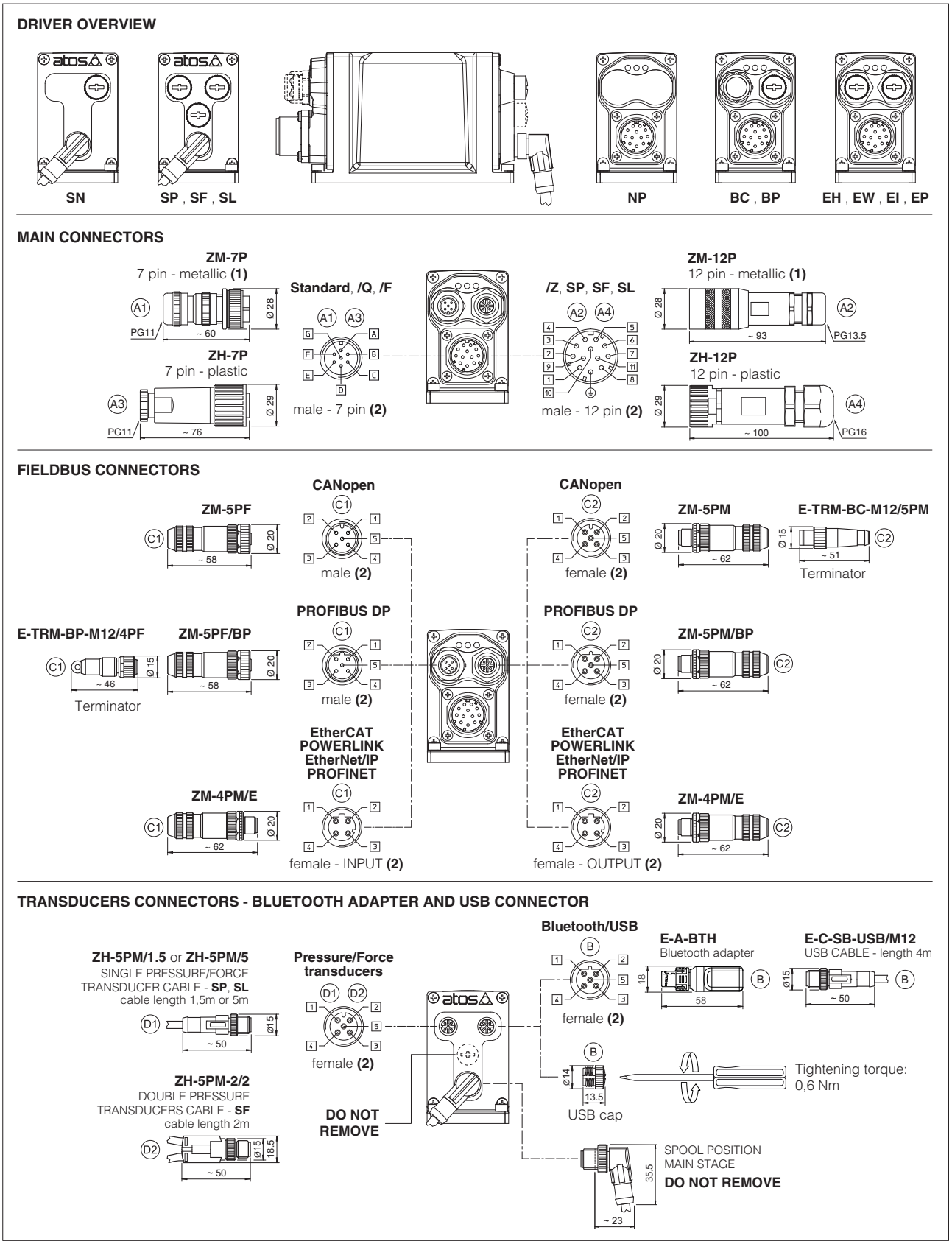

(1) Use of metallic connectors is strongly recommended in order to fulfill EMC requirements **(2)** Pin layout always referred to driver's view

22.9 Diagnostic LEDs - only for **LES**

Three leds show driver operative conditions for immediate basic diagnostics. Please refer to the driver user manual for detailed information.

FIELDBUS / LEDS	NP Not Present	BC CANopen	BP PROFIBUS DP	EH EtherCAT	EW POWERLINK	EI EtherNet/IP	EP PROFINET
L1	VALVE STATUS			LINK/ACT			
L2	NETWORK STATUS			NETWORK STATUS			
L3	SOLENOID STATUS			LINK/ACT			

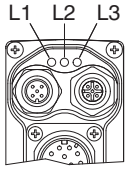

23 IN / OUT FIELDBUS COMMUNICATION CONNECTORS

Two fieldbus communication connectors are always available for digital drivers executions BC, BP, EH, EW, EI, EP. This features allows considerable technical advantages in terms of installation simplicity, wirings reduction and also avoid the usage expensive T-connectors.
For BC and BP executions the fieldbus connectors have an internal pass-through connection and can be used like end point of the fieldbus network, using an external terminator (see tech table **GS500**).
For EH, EW, EI and EP executions the external terminators are not required: each connector is internally terminated.

BC and BP pass-through connection

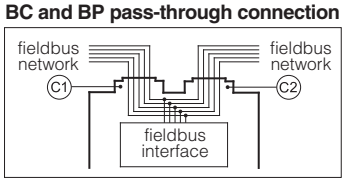

24 CONNECTORS CHARACTERISTICS - to be ordered separately

24.1 Main connectors - 7 pin

CONNECTOR TYPE	POWER SUPPLY AND SIGNALS	POWER SUPPLY AND SIGNALS
CODE	A1 ZM-7P	A3 ZH-7P
Type	7pin female straight circular	7pin female straight circular
Standard	According to MIL-C-5015	According to MIL-C-5015
Material	Metallic	Plastic reinforced with fiber glass
Cable gland	PG11	PG11
Recommended cable	LiYCY 7 x 0,75 mm² max 20 m (logic and power supply) or LiYCY 7 x 1 mm² max 40 m (logic and power supply)	LiYCY 7 x 0,75 mm² max 20 m (logic and power supply) or LiYCY 7 x 1 mm² max 40 m (logic and power supply)
Conductor size	up to 1 mm² - available for 7 wires	up to 1 mm² - available for 7 wires
Connection type	to solder	to solder
Protection (EN 60529)	IP 67	IP 67

24.2 Main connectors - 12 pin

CONNECTOR TYPE	POWER SUPPLY AND SIGNALS	POWER SUPPLY AND SIGNALS
CODE	A2 ZM-12P	A4 ZH-12P
Type	12pin female straight circular	12pin female straight circular
Standard	DIN 43651	DIN 43651
Material	Metallic	Plastic reinforced with fiber glass
Cable gland	PG13,5	PG16
Recommended cable	LiYCY 12 x 0,75 mm² max 20 m (logic and power supply)	LiYCY 10 x 0,14mm² max 40 m (logic) LiYY 3 x 1mm² max 40 m (power supply)
Conductor size	0,5 mm² to 1,5 mm² - available for 12 wires	0,14 mm² to 0,5 mm² - available for 9 wires 0,5 mm² to 1,5 mm² - available for 3 wires
Connection type	to crimp	to crimp
Protection (EN 60529)	IP 67	IP 67

24.3 IO-Link connector - only for **LEB-SN-IL**

CONNECTOR TYPE	IL IO-Link
CODE	A ZM-5PF
Type	5pin female straight circular
Standard	M12 coding A – IEC 61076-2-101
Material	Metallic
Cable gland	Pressure nut - cable diameter 6÷8 mm
Recommended cable	5 x 0,75 mm² max 20 m
Connection type	screw terminal
Protection (EN 60529)	IP 67

24.4 Fieldbus communication connectors

CONNECTOR TYPE	BC CANopen (1)		BP PROFIBUS DP (1)		EH EtherCAT, EW POWERLINK, EI EtherNet/IP, EP PROFINET (2)
CODE	C1 ZM-5PF	C2 ZM-5PM	C1 ZM-5PF/BP	C2 ZM-5PM/BP	C1 C2 ZM-4PM/E
Type	5 pin female straight circular	5 pin male straight circular	5 pin female straight circular	5 pin male straight circular	4 pin male straight circular
Standard	M12 coding A – IEC 61076-2-101		M12 coding B – IEC 61076-2-101		M12 coding D – IEC 61076-2-101
Material	Metallic		Metallic		Metallic
Cable gland	Pressure nut - cable diameter 6÷8 mm		Pressure nut - cable diameter 6÷8 mm		Pressure nut - cable diameter 4÷8 mm
Cable	CANbus Standard (DR 303-1)		PROFIBUS DP Standard		Ethernet standard CAT-5
Connection type	screw terminal		screw terminal		terminal block
Protection (EN 60529)	IP67		IP 67		IP 67

(1) E-TRM-** terminators can be ordered separately - see tech table **GS500**

(2) Internally terminated

24.5 Remote pressure/Force transducer connectors - only for **SP, SF, SL**

CONNECTOR TYPE	SP, SL - Single transducer		SF - Double transducers
CODE	D1 ZH-5PM/1.5	D1 ZH-5PM/5	D2 ZH-5PM-2/2
Type	5 pin male straight circular		4 pin male straight circular
Standard	M12 coding A – IEC 61076-2-101		M12 coding A – IEC 61076-2-101
Material	Plastic		Plastic
Cable gland	Connector moulded on cables 1,5 m length	5 m length	Connector moulded on cables 2 m length
Cable	5 x 0,25 mm²		3 x 0,25 mm² (both cables)
Connection type	molded cable		splitting cable
Protection (EN 60529)	IP 67		IP 67

25 PLUGS LOCATION FOR PILOT/DRAIN CHANNELS

Depending on the position of internal plugs, different pilot/drain configurations can be obtained as shown below.
To modify the pilot/drain configuration, proper plugs must only be interchanged. The plugs have to be sealed using loctite 270.
Standard valves configuration provides internal pilot and external drain.

DPZO-1 **Pilot channels** **Drain channels**

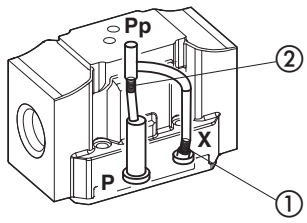

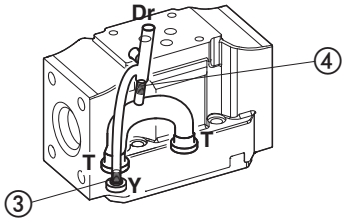

Internal piloting: blinded plug SP-X300F ① in X;
External piloting: blinded plug SP-X300F ② in Pp;
Internal drain: blinded plug SP-X300F ③ in Y;
External drain: blinded plug SP-X300F ④ in Dr.

DPZO-2 **Pilot channels** **Drain channels**

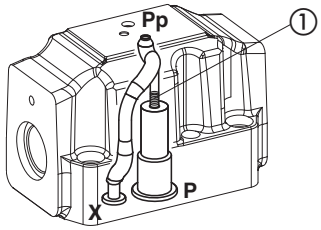

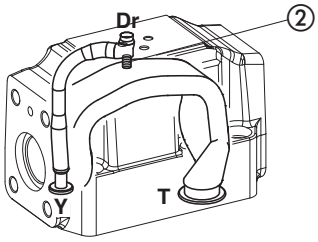

Internal piloting: Without blinded plug SP-X300F ①;
External piloting: Add blinded plug SP-X300F ①;
Internal drain: Without blinded plug SP-X300F ②;
External drain: Add blinded plug SP-X300F ②.

DPZO-4 **Pilot channels** **Drain channels**

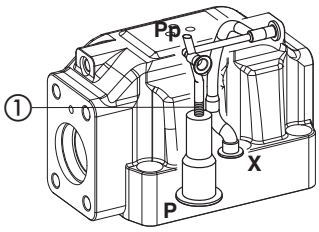

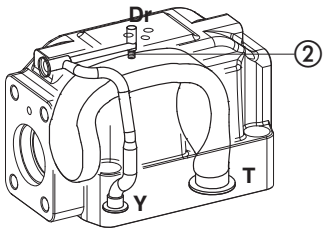

Internal piloting: Without blinded plug SP-X500F ①;
External piloting: Add blinded plug SP-X500F ①;
Internal drain: Without blinded plug SP-X300F ②;
External drain: Add blinded plug SP-X300F ②.

DPZO-6 **Pilot channels** **Drain channels**

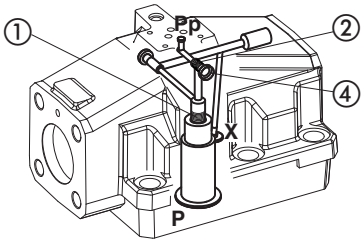

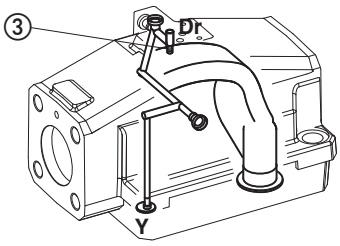

Internal piloting: Without plug ①;
External piloting: Add DIN-908 M16x1,5 in pos ①;
Internal drain: Without blinded plug SP-X300F ③;
External drain: Add blinded plug SP-X300F ③.

DPZO-8 **Pilot channels** **Drain channels**

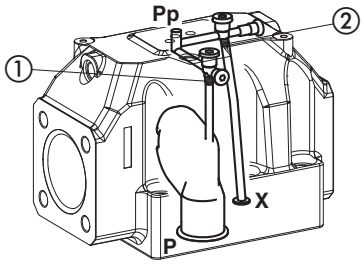

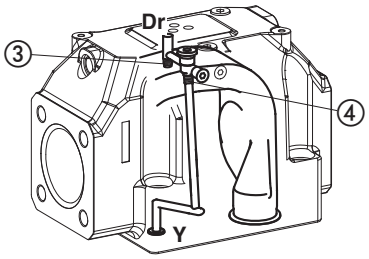

Internal piloting: Without plug ①;
External piloting: Add NPTF 1/8 in pos ①;
plug NPTF 1/8 in pos ②;
Internal drain: Without plug NPTF 1/8 in pos ③;
Add plug NPTF 1/8 in pos ④;
External drain: Add plug NPTF 1/8 in pos ③.

DPZO-LEB-*-1
DPZO-LES-*-1

ISO 4401: 2005
Mounting surface: 4401-05-05-0-05 (see table P005)

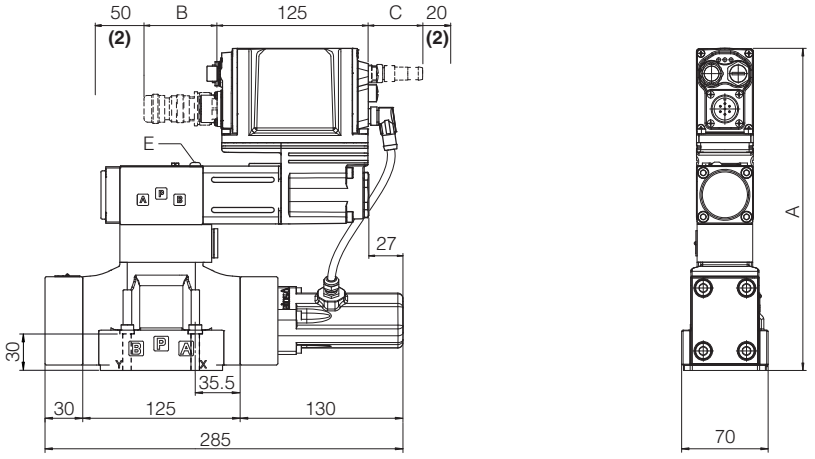

DPZO-*-1	A	B (1)	C (1)	E (air bleeding)	Mass [kg]
LEB - SN - IL	256	60	-	3	9,8
LEB - SN - NP	256	100	-		
LES - SN - NP, BC, BP, EH	256	100	58		
LES - SN - EW, EI, EP	271	100	58		
LES - SP, SF, SL - *	271	100	58		

(1) The indicated dimension refers to the longer connectors or Bluetooth adapter
For dimensions of connectors and Bluetooth adapter, see sections 22.6, 22.7 and 22.8
(2) Space required for connection cable and for connector removal

DPZO-LEB-*-2
DPZO-LES-*-2

ISO 4401: 2005
Mounting surface: 4401-07-07-0-05 (see table P005)

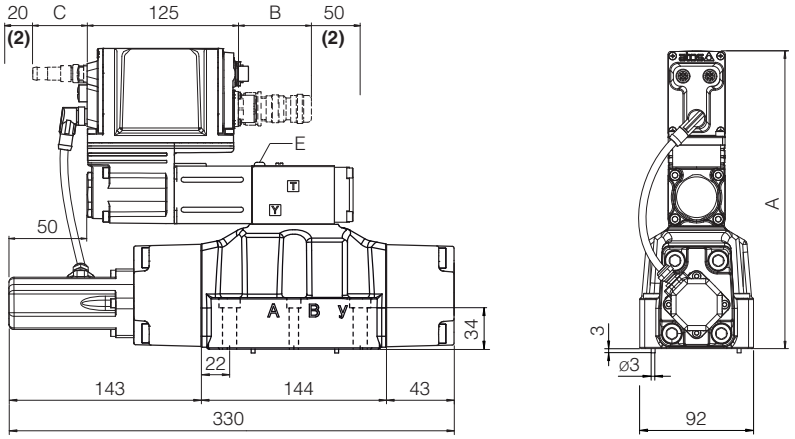

DPZO-*-2	A	B (1)	C (1)	E (air bleeding)	Mass [kg]
LEB - SN - IL	237	60	-	3	14,4
LEB - SN - NP	237	100	-		
LES - SN - NP, BC, BP, EH	237	100	58		
LES - SN - EW, EI, EP	252	100	58		
LES - SP, SF, SL - *	252	100	58		
Option /G	+30	-			+0,9

(1) The indicated dimension refers to the longer connectors or Bluetooth adapter
For dimensions of connectors and Bluetooth adapter, see sections 22.6, 22.7 and 22.8
(2) Space required for connection cable and for connector removal

Note: for /B option the proportional solenoid, the LVDT transducer and the on-board digital driver are at side of port B of the main stage

DPZO-LEB-*-4
DPZO-LES-*-4

ISO 4401: 2005
Mounting surface: 4401-08-08-0-05(see table P005)

DPZO-LEB-*-4M
DPZO-LES-*-4M

ISO 4401: 2005
Mounting surface: 4401-08-08-0-05(see table P005)
ports A, B, P, T Ø 32mm

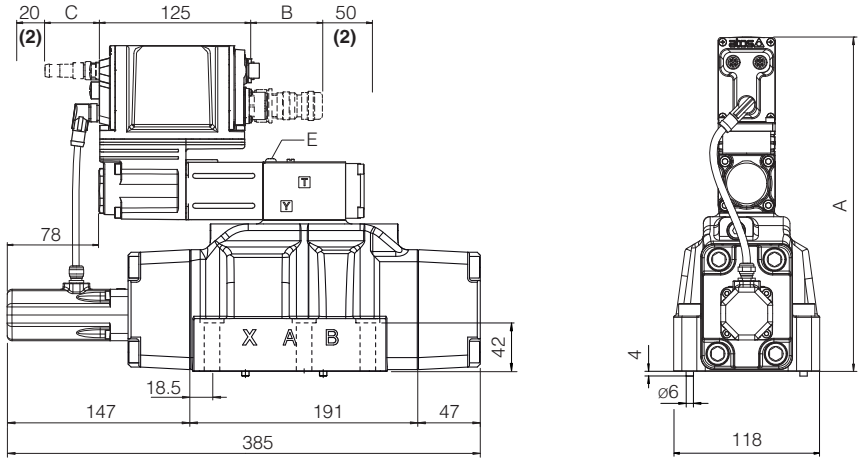

DPZO-*-4 and **DPZO-*-4M**	**A**	**B** (1)	**C** (1)	**E** (air bleeding)	**Mass [kg]**
LEB - SN - IL	266	60	-	3	19,4
LEB - SN - NP	266	100	-		
LES - SN - NP, BC, BP, EH	266	100	58		
LES - SN - EW, EI, EP	281	100	58		
LES - SP, SF, SL - *	281	100	58		
Option /G	+30	-			+0,9

(1) The indicated dimension refers to the longer connectors or Bluetooth adapter
For dimensions of connectors and Bluetooth adapter, see sections 22.6, 22.7 and 22.8
(2) Space required for connection cable and for connector removal

DPZO-LEB-*-6
DPZO-LES-*-6

ISO 4401: 2005
Mounting surface: 4401-10-09-0-05 (see table P005)

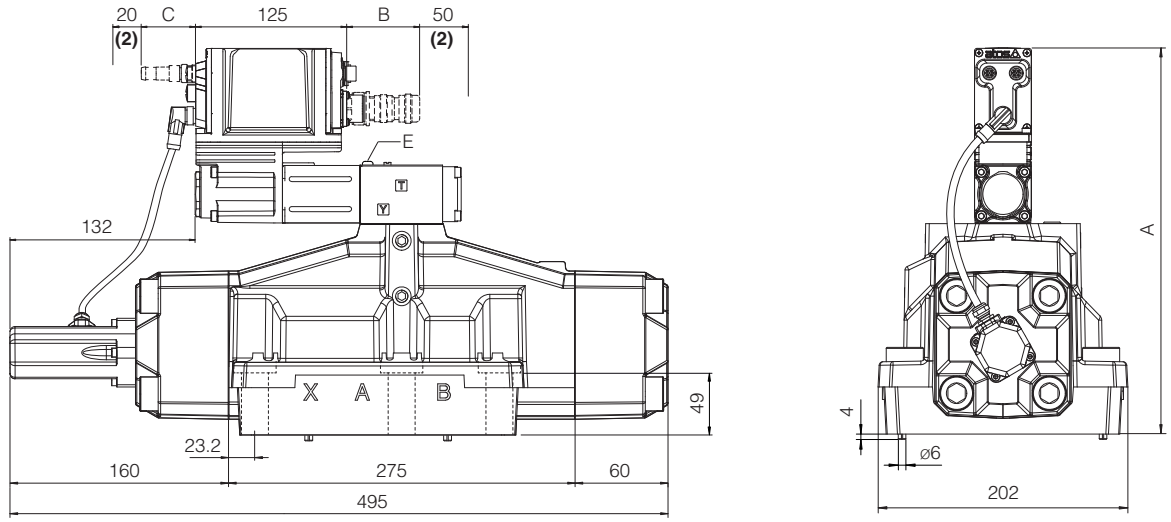

DPZO-*-6	**A**	**B** (1)	**C** (1)	**E** (air bleeding)	**Mass [kg]**
LEB - SN - IL	308	60	-	3	43,4
LEB - SN - NP	308	100	-		
LES - SN - NP, BC, BP, EH	323	100	58		
LES - SN - EW, EI, EP	323	100	58		
LES - SP, SF, SL - *	323	100	58		
Option /G	+40	-			+0,9

(1) The indicated dimension refers to the longer connectors or Bluetooth adapter
For dimensions of connectors and Bluetooth adapter, see sections 22.6, 22.7 and 22.8
(2) Space required for connection cable and for connector removal

Note: for /B option the proportional solenoid, the LVDT transducer and the on-board digital driver are at side of port B of the main stage

DPZO-LEB-*-8
DPZO-LES-*-8

ISO 4401: 2005
Mounting surface: 4401-10-09-0-05 (see table P005)

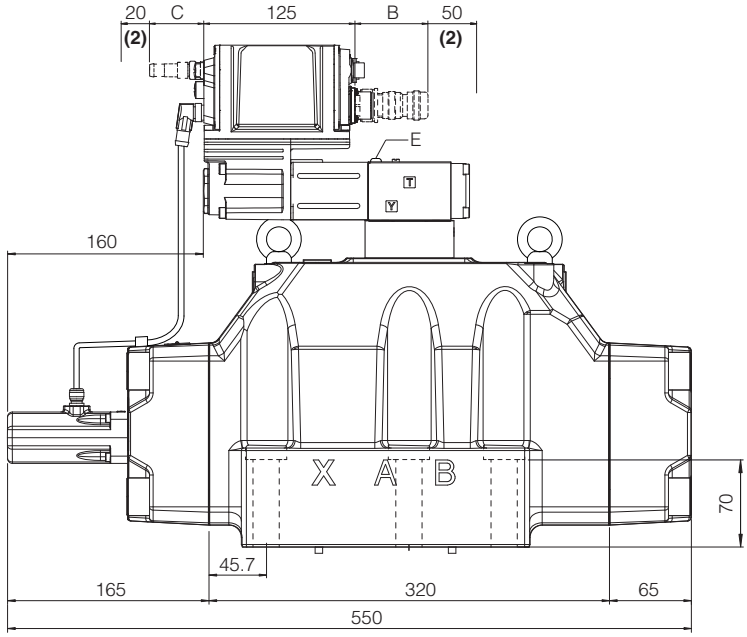

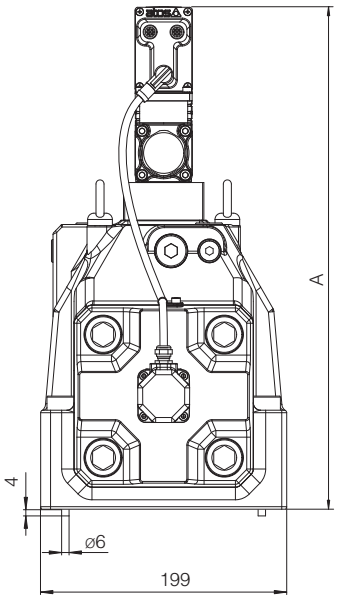

DPZO-*-8	A	B (1)	C (1)	E (air bleeding)	Mass [kg]
LEB - SN - IL	402	60	-	3	80,4
LEB - SN - NP	402	100	-		
LES - SN - NP, BC, BP, EH	402	100	58		
LES - SN - EW, EI, EP	417	100	58		
LES - SP, SF, SL - *	417	100	58		
Option /G	+40	-			+0,9

(1) The indicated dimension refers to the longer connectors or Bluetooth adapter
For dimensions of connectors and Bluetooth adapter, see sections 22.6, 22.7 and 22.8
(2) Space required for connection cable and for connector removal

Note: for /B option the proportional solenoid, the LVDT transducer and the on-board digital driver are at side of port B of the main stage

27 FASTENING BOLTS AND SEALS

Type	Size	Fastening bolts	Seals
DPZO	**1** = 10	4 socket head screws M6x40 class 12.9 Tightening torque = 15 Nm	5 OR 2050 Diameter of ports A, B, P, T: Ø 11 mm (max) 2 OR 108 Diameter of ports X, Y: Ø = 5 mm (max)
	2 = 16	4 socket head screws M10x50 class 12.9 Tightening torque = 70 Nm 2 socket head screws M6x45 class 12.9 Tightening torque = 15 Nm	4 OR 130 Diameter of ports A, B, P, T: Ø 20 mm (max) 2 OR 2043 Diameter of ports X, Y: Ø = 7 mm (max)
	4 = 25	6 socket head screws M12x60 class 12.9 Tightening torque = 125 Nm	4 OR 4112 Diameter of ports A, B, P, T: Ø 24 mm (max) 2 OR 3056 Diameter of ports X, Y: Ø = 7 mm (max)
	4M = 27	6 socket head screws M12x60 class 12.9 Tightening torque = 125 Nm	4 OR 3137 Diameter of ports A, B, P, T: Ø 32 mm (max) 2 OR 3056 Diameter of ports X, Y: Ø = 7 mm (max)
	6 = 32	6 socket head screws M20x80 class 12.9 Tightening torque = 600 Nm	4 OR 144 Diameter of ports A, B, P, T: Ø 34 mm (max) 2 OR 3056 Diameter of ports X, Y: Ø = 7 mm (max)
	8 = 35	6 socket head screws M20x100 class 12.9 Tightening torque = 600 Nm	4 OR 156 Diameter of ports A, B, P, T: Ø 50 mm (max) 2 OR 3056 Diameter of ports X, Y: Ø = 9 mm (max)

28 RELATED DOCUMENTATION

FS001	Basics for digital electrohydraulics	**K800**	Electric and electronic connectors
FS500	Digital proportional valves with p/Q control	**P005**	Mounting surfaces for electrohydraulic valves
FS900	Operating and maintenance information for proportional valves	**QB320**	Quickstart for LEB valves commissioning
FY100	Safety proportional valves - option /U	**QF320**	Quickstart for LES valves commissioning
FY200	Safety proportional valves - option /K	**Y010**	Basics for safety components
GS500	Programming tools	**E-MAN-RI-LEB**	TEB/LEB user manual
GS510	Fieldbus	**E-MAN-RI-LES**	TES/LES user manual
GS520	IO-Link interface	**E-MAN-RI-LES-S**	TES/LES with p/Q control user manual

Proportional directional valves **high performance**

piloted, with two LVDT transducers and positive spool overlap

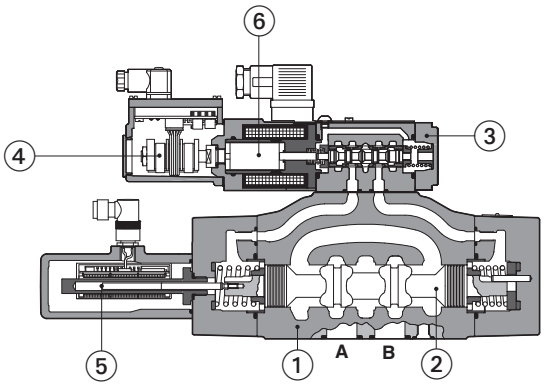

DPZO-L-271

① Valve body
② Main stage Spool
③ Pilot valve
④ Pilot valve LVDT transducer
⑤ Main stage LVDT transducer
⑥ Pilot valve solenoid

DPZO-L

Proportional directional valves, piloted, with two LVDT position transducers and positive spool overlap for best dynamics in directional controls and not compensated flow regulations.

The valves operate in association with digital off-board divers, see section 3.

The two LVDT transducers (pilot and main stage) grant very high regulation accuracy and response sensitivity.

With de-energized proportional solenoids, mechanical central position of the spool is performed by centering springs

Spools regulation characteristics:
L = linear
S = progressive for fine low flow control
D and DL = differential, for control of actuators with area ratio 1:2
D9 and L9 = for regenerative circuit
Q5 and V9 = for alternate P/Q control

Size: **10** ÷ **32** - ISO 4401
Max flow: **180** ÷ **1600 l/min**
Max pressure: **350 bar**

1 MODEL CODE OF STANDARD SPOOLS

DPZO	-	L	-	2	71	-	L	5	/	*	*	/	*

Proportional directional valve, piloted

L = two LVDT transducers

Valve size ISO 4401:
1 = 10 **2** = 16 **4** = 25 **4M** = 27 **6** = 32

Configuration:

Standard | Option **/B**

71 =

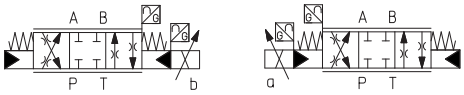

72 = (1)

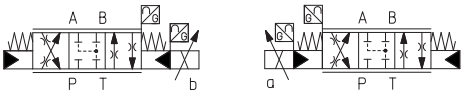

73 =

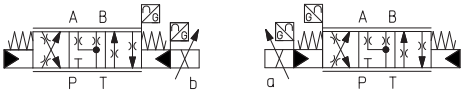

Spool type, regulating characteristics **(2)**:

L = linear

DL = differential-linear
P-A = Q, B-T = Q/2
P-B = Q/2, A-T = Q

S = progressive

D = differential-progressive
P-A = Q, B-T = Q/2
P-B = Q/2, A-T = Q

(1) Only for DPZO sizes 2, 4, 4M with spools L5, S5 or D5: in central position the leakages P-A and P-B are drained to tank, avoiding the drift of cylinders with differential areas

Seals material,
see section 7 :
- = NBR
PE = FKM
BT = NBR low temperature

Series number

Hydraulic options (3):
B = solenoid and LVDT transducer at side of port B of the main stage (side A of pilot valve)
D = internal drain
E = external pilot pressure
G = pressure reducing valve for piloting

Spool size:	**3**	**5**	**5**	**5**
Spool type:	L, S, D	L, DL, S, D	L, S, D	L, S, D5
Configuration:	71, 73	71, 73	71, 73	72
DPZO-1 =	-	100	-	-
DPZO-2 =	160	250	-	250
DPZO-4 =	-	480	-	480
DPZO-4M =	-	550	-	550
DPZO-6 =	-	-	640	-

Nominal flow (l/min) at Δp 10bar P-T

(2) Spools for regenerative circuit or alternated P/Q control, see section 2

(3) All combination possible

2 MODEL CODE OF SPOOLS FOR REGENERATIVE CIRCUIT OR ALTERNATED P/Q CONTROL - for valve model code and options, see sect. 1

DPZO	-	L	-	2	71 - L9	/	*	*	/	*

Configuration and spool for regenerative circuit:

71-D9

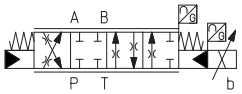

71-L9

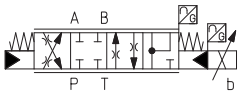

73-D9

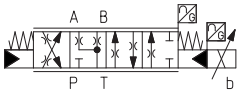

73-L9

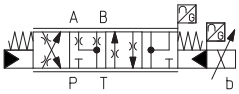

Configuration and spool for alternated P/Q control:

73-Q5

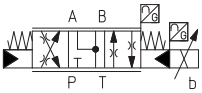

73-V9

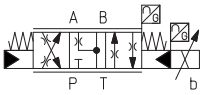

Spool size:	**D9**	**L9**	**V9**	**Q5**
DPZO-1 =	100	-	100	100
DPZO-2 =	250	250	250	250
DPZO-4 =	480	-	480	480
DPZO-4M =	550	-	550	550
DPZO-6 =	-	-	640	-

Nominal flow (l/min) at Δp 10bar P-T

D9

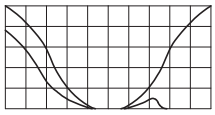

For regenerative circuit (additional external check valve required)
see 8.1 - diagram 26

L9

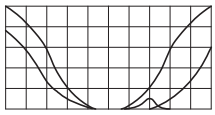

For regenerative circuit internal to the valve
see 8.1 - diagram 27

Q5

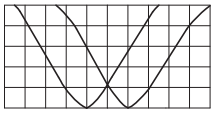

For alternated P/Q control
see 8.1 - diagram 28

V9

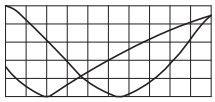

For alternated P/Q control of injection cycle in plastic machinery
see 8.1 - diagram 29

3 OFF-BOARD ELECTRONIC DRIVERS

Please include in the driver order also the complete code of the connected proportional valve.

Drivers model	E-BM-LEB	E-BM-LES
Type	digital	digital
Format	DIN-rail panel	DIN-rail panel
Tech table	GS230	GS240

4 GENERAL CHARACTERISTICS

Assembly position	Any position
Subplate surface finishing to ISO 4401	Acceptable roughness index: Ra ≤ 0,8, recommended Ra 0,4 – Flatness ratio 0,01/100
MTTFd valves according to EN ISO 13849	75 years, for futher details see technical table P007
Ambient temperature range	**Standard** = -20°C ÷ +60°C **/PE** option = -20°C ÷ +60°C **/BT** option = -40°C ÷ +60°C
Storage temperature range	**Standard** = -20°C ÷ +70°C **/PE** option = -20°C ÷ +70°C **/BT** option = -40°C ÷ +70°C
Surface protection	Zinc coating with black passivation
Corrosion resistance	Salt spray test (EN ISO 9227) > 200 h
Vibration resistance	See technical table G004
Compliance	CE according to EMC directive 2014/30/EU (Immunity: EN 61000-6-2; Emission: EN 61000-6-3) RoHS Directive 2011/65/EU as last update by 2015/863/EU REACH Regulation (EC) n°1907/2006

5 HYDRAULIC CHARACTERISTICS - based on mineral oil ISO VG 46 at 50 °C

Valve model	DPZO-L-1	DPZO-L-2		DPZO-L-4	DPZO-L-4M	DPZO-L-6
Pressure limits [bar]	ports **P, A, B, X** = 350; **T** = 250 (10 for option /D); **Y** = 10;					
Spool type standard	**L5, DL5, S5, D5**	**L3, S3, D3**	**L5, DL5, S5, D5**			**L5, S5, D5**
Spool type regenerative or P/Q	**D9, V9, Q5**		**D9, L9, V9, Q5**	**D9, V9, Q5**		**V9**
Nominal flow Δp P-T [l/min] **(1)** Δp= 10 bar	100	160	250	480	550	640
Nominal flow Δp P-T [l/min] **(1)** Δp= 30 bar	160	270	430	830	950	1100
Max permissible flow [l/min]	180	400	550	1000	1100	1600
Piloting pressure [bar]	min. = 25; max = 350 (option /G advisable for pilot pressure > 150 bar)					
Piloting volume [cm³]	1,4	3,7		9,0	11,3	21,6
Piloting flow **(2)** [l/min]	1,7	3,7		6,8	8	14,4
Leakage **(3)** Pilot [cm³/min]	100 / 300	100 / 300		200 / 500	200 / 600	900 / 2800
Leakage **(3)** Main stage [l/min]	0,15 / 0,5	0,2 / 0,6		0,3 / 1,0	0,3 / 1,0	1,0 / 3,0
Response time **(4)** [ms]	≤ 50	≤ 60		≤ 80	≤ 85	≤ 90
Hysteresis	≤ 0,1 [% of max regulation]					
Repeatability	± 0,1 [% of max regulation]					
Thermal drift	zero point displacement < 1% at ΔT = 40°C					

(1) For different Δp, the max flow is in accordance to the diagrams in section 8.2
(2) With step reference input signal 0 ÷100 %
(3) At p = 100/350 bar
(4) 0-100% step signal see detailed diagrams in section 8.3

6 ELECTRICAL CHARACTERISTICS

Max power consumption	30 W
Max. solenoid current	2,6 A
Coil resistance R at 20°C	3 ÷ 3,3 Ω
Insulation class	H (180°) Due to the occuring surface temperatures of the solenoid coils, the European standards ISO 13732-1 and EN982 must be taken into account
Protection degree to DIN EN60529	IP65 with mating connectors
Duty factor	Continuous rating (ED=100%)

7 SEALS AND HYDRAULIC FLUIDS - for other fluids not included in below table, consult our technical office

Seals, recommended fluid temperature	NBR seals (standard) = -20°C ÷ +80°C, with HFC hydraulic fluids = -20°C ÷ +50°C FKM seals (/PE option) = -20°C ÷ +80°C HNBR seals (/BT option) = -40°C ÷ +60°C, with HFC hydraulic fluids = -20°C ÷ +50°C			
Recommended viscosity	20÷100 mm²/s - max allowed range 15 ÷ 380 mm²/s			
Max fluid contamination level normal operation	ISO4406 class 18/16/13 NAS1638 class 7		see also filter section at www.atos.com or KTF catalog	
Max fluid contamination level longer life	ISO4406 class 16/14/11 NAS1638 class 5			
Hydraulic fluid	**Suitable seals type**	**Classification**	**Ref. Standard**	
Mineral oils	NBR, FKM, NBR low temp.	HL, HLP, HLPD, HVLP, HVLPD	DIN 51524	
Flame resistant without water	FKM	HFDU, HFDR	ISO 12922	
Flame resistant with water	NBR, NBR low temp.	HFC		

8 DIAGRAMS (based on mineral oil ISO VG 46 at 50 °C)

8.1 Regulation diagrams (values measure at Δp 10 bar P-T)

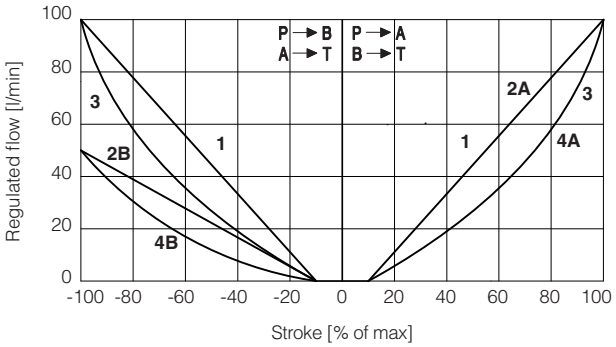

DPZO-1:
1 = L5 **2A** = DL5 (P → A, A → T)
3 = S5 **2B** = DL5 (P → B, B → T)
4A = D5 (P → A, A → T)
4B = D5 (P → B, B → T)

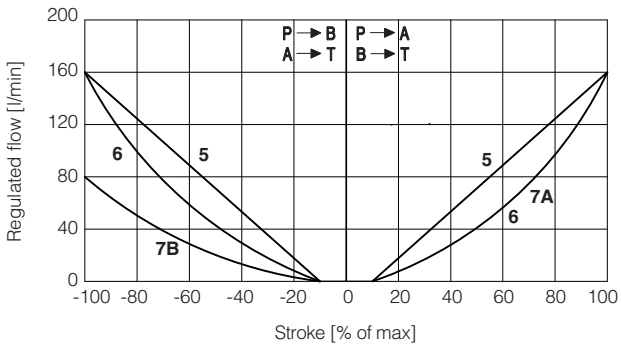

DPZO-2:
5 = L3 **7A** = D3 (P → A, A → T)
6 = S3 **7B** = D3 (P → B, B → T)

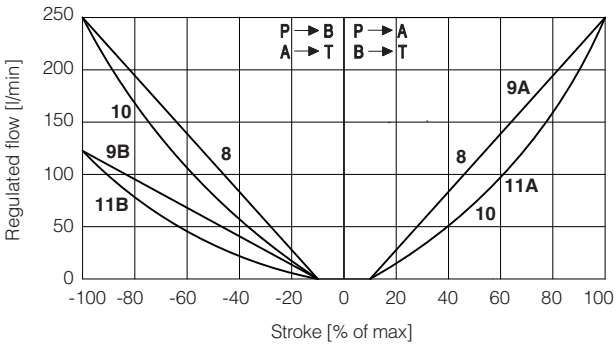

DPZO-2:
8 = L5 **9A** = DL5 (P → A, A → T)
10 = S5 **9B** = DL5 (P → B, B → T)
11A = D5 (P → A, A → T)
11B = D5 (P → B, B → T)

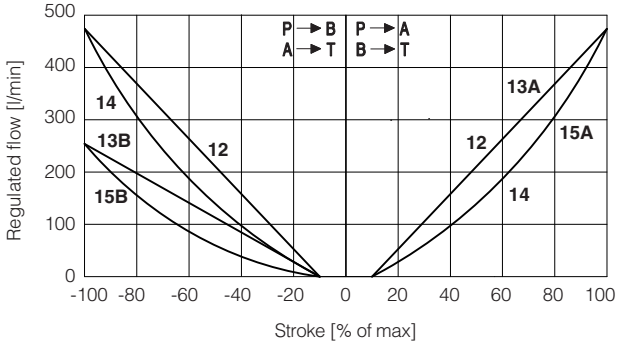

DPZO-4:
12 = L5 **13A** = DL5 (P → A, A → T)
14 = S5 **13B** = DL5 (P → B, B → T)
15A = D5 (P → A, A → T)
15B = D5 (P → B, B → T)

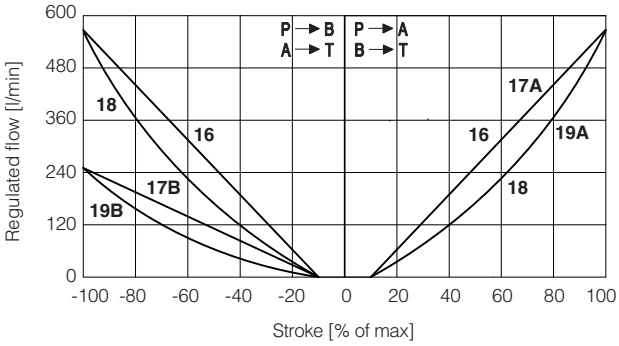

DPZO-4M:
16 = L5 **17A** = DL5 (P → A, A → T)
18 = S5 **17B** = DL5 (P → B, B → T)
19A = D5 (P → A, A → T)
19B = D5 (P → B, B → T)

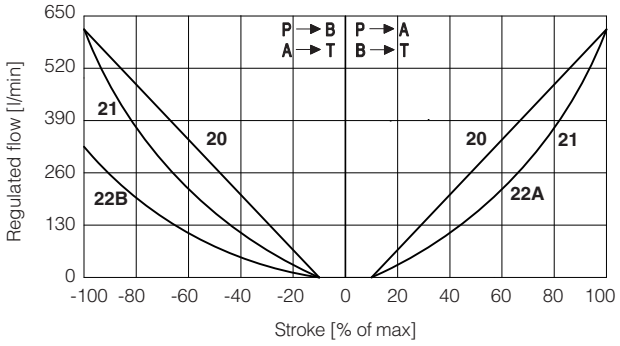

DPZO-6:
20 = L5 **22A** = D5 (P → A, A → T)
21 = S5 **22B** = D5 (P → B, B → T)

Note:
Hydraulic configuration vs. reference signal (standard and option /B)

Reference signal $\left.\begin{matrix} 0 \div +10\ V \\ 12 \div 20\ mA \end{matrix}\right\}$ P → A / B → T

Reference signal $\left.\begin{matrix} 0 \div -10\ V \\ 12 \div 4\ mA \end{matrix}\right\}$ P → B / A → T

23 = differential - regenerative spool **D9**
(not available for valve size 32 and 35)

D9 spool type with a fourth position specific to regenerative circuit, performed by means of an additional external check valve.

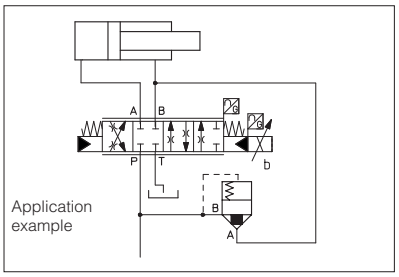

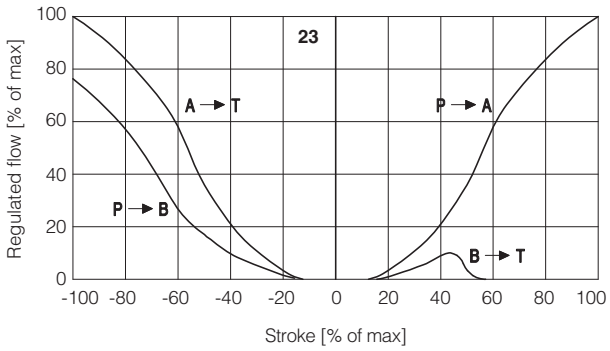

24 = linear - internal regenerative spool **L9**
(available only for valve size 16)

L9 spool type with a fourth position specific to perform a regenerative circuit internal to the valve.

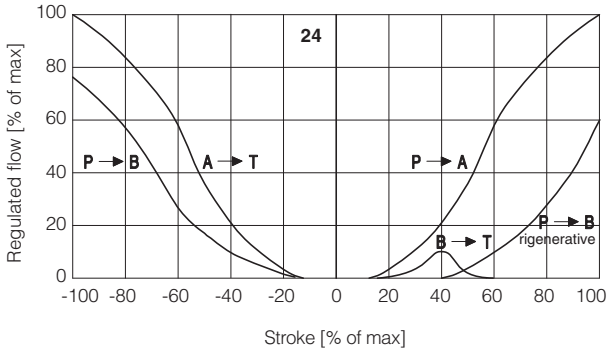

25 = linear spool **Q5**
(not available for valve size 32 and 35)

Q5 spool type is specific for alternate P/Q controls in combination with /S* option of digital integral drivers, (see tech. table **FS500**).
It allows to control the pressure in A port or B port and it provides a safety central position (A-T/B-T) to depressurize the actuator chambers.
The strong meter-in characteristic makes the spool suitable for both pressure control and motion regulations in several applications.

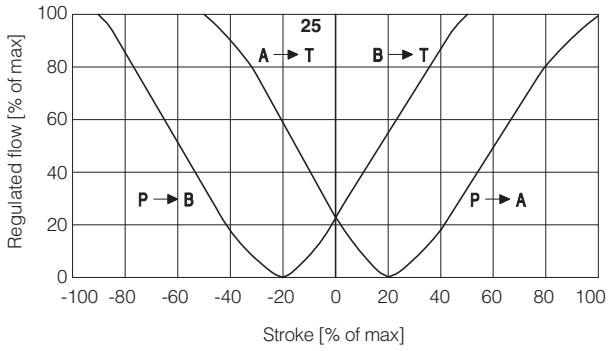

26 = differential - progressive spool **V9**

V9 spool type is specific for alternate P/Q controls in combination with S* option of digital integral drivers (see tech table **FS500**).
This spool is specially designed to manage the whole injection cycle in plastic machinery, thanks to the following specific features:

- strong meter-in characteristic to allow the pressure control in A port during the holding pressure (P-A) and the plasticizing (A-T) phases
- safety central position (A-T/B-T) to depressurize the actuator chambers
- large A-T and B-T flow capability, required during the plasticizing phase, to discharge big volumes from high differential injection cylinders with low pressure drops and permitting the contemporary oil suction from tank

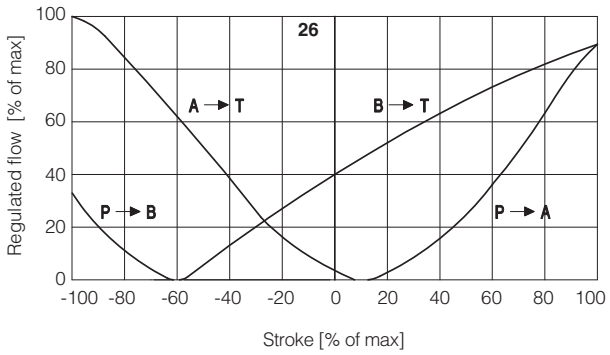

8.2 Operating diagrams

Flow /Δp diagram

stated at 100% of spool stroke

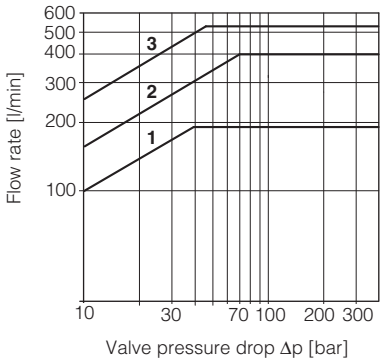

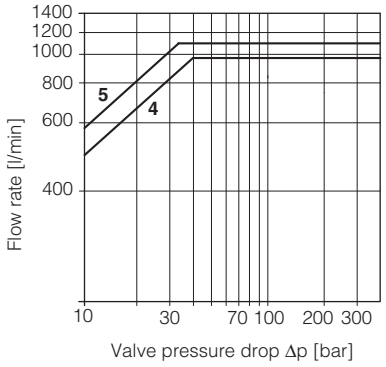

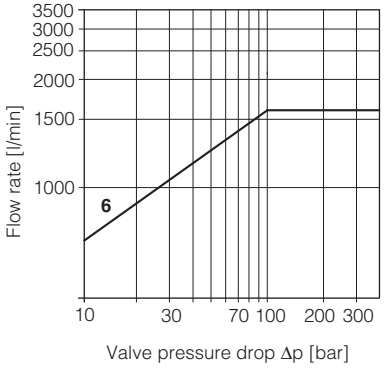

DPZO-1:
1 = spools L5, S5, D5, DL5, D9, V9, Q5

DPZO-2:
2 = spools L3, S3, D3
3 = spools L5, S5, D5, DL5, D9, L9, V9, Q5

DPZO-4:
4 = spools L5, S5, D5, DL5, D9, V9, Q5

DPZO-4M:
5 = spools L5, S5, D5,DL5, D9, V9, Q5

DPZO-6:
6 = L5, S5, D5, V9

8.3 Response time

The response times in below diagrams are measured at different steps of the reference input signal. They have to be considered as average values. For the valves with digital electronics the dynamics performances can be optimized by setting the internal software parameters.

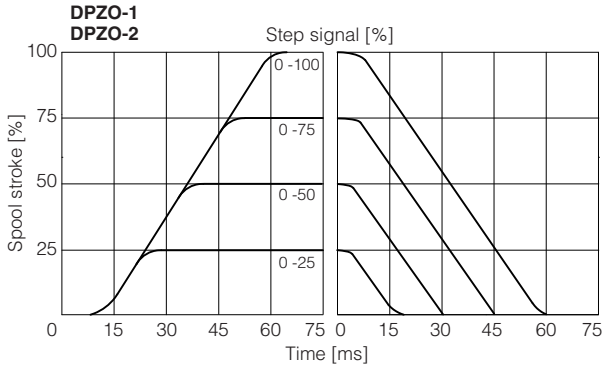

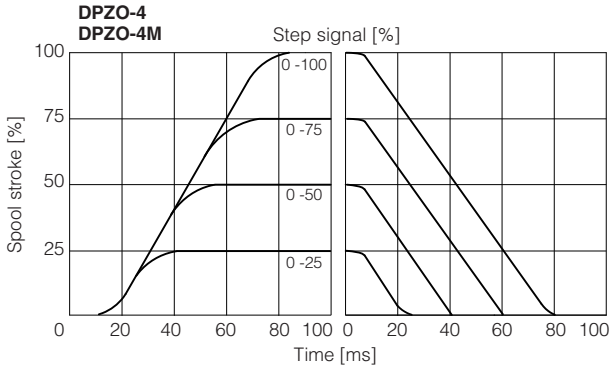

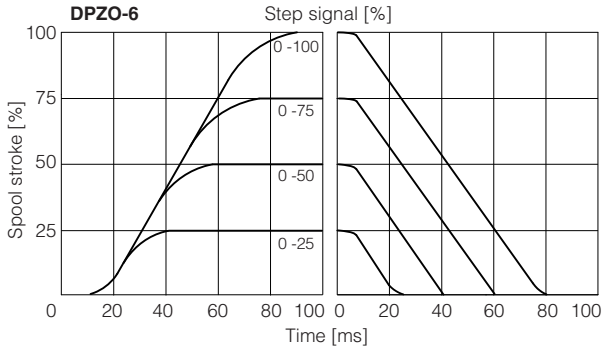

9 HYDRAULIC OPTIONS

B = Solenoid and LVDT transducer at side of port B of the main stage (side A of pilot valve). For hydraulic configuration vs reference signal, see 8.1

D = Internal drain (through port T).
Pilot and drain configuration can be modified as shown in the functional scheme here aside. For detailed view of plugs position, see section 12
The valve's standard configuration provides internal pilot and external drain.

E = External pilot (through port X).
Pilot and drain configuration can be modified as shown in the functional scheme here aside. For detailed view of plugs position, see section 12
The valve's standard configuration provides internal pilot and external drain.

G = Pressure reducing valve ③ with fixed setting, installed between pilot valve and main body. Reduced pressure setting:

DPZO-1, DPZO-2, DPZO-4(M) and DPZO-6 = **40 bar**

It is advisable for valves with internal pilot in case of system pressure higher than 150 bar.
Pressure reducing valve ③ is standard for DPZO-1, for other sizes add /G option.

Functional Scheme - example of configuration 71

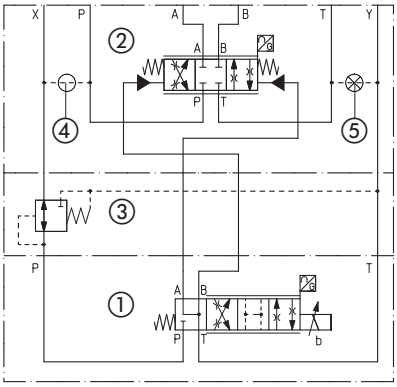

① Pilot valve
② Main stage
③ Pressure reducing valve
④ Plug to be added for external pilot trough port X
⑤ Plug to be removed for internal drain through port T

10 ELECTRICAL CONNECTION - connectors supplied with the valve

10.1 Pilot valve solenoid connector

PIN	SIGNAL	TECHNICAL SPECIFICATION	Connector code 666
1	**COIL**	Power supply	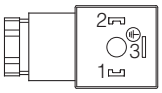
2	**COIL**	Power supply	
3	**GND**	Ground	

10.2 LVDT pilot transducer connector

PIN	SIGNAL	TECHNICAL SPECIFICATION	Connector code 345
1	**TR**	Output signal	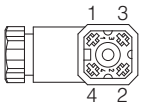
2	**VT-**	Power supply -15VDC	
3	**VT+**	Power supply +15VDC	
4	**GND**	Ground	

10.3 LVDT main stage transducer connector

PIN	SIGNAL	TECHNICAL SPECIFICATION	Connector code ZBE-08
1	**PROG**	Do not connect	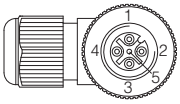
2	**VT+**	Power supply +15VDC	
3	**AGND**	Ground	
4	**TR**	Output signal	
5	**VT-**	Power supply -15VDC	

11 FASTENING BOLTS AND SEALS

Type	Size	Fastening bolts	Seals
DPZO	**1** = 10	4 socket head screws M6x40 class 12.9 Tightening torque = 15 Nm	5 OR 2050; Diameter of ports A, B, P, T: Ø 11 mm (max) 2 OR 108 Diameter of ports X, Y: Ø = 5 mm (max)
	2 = 16	4 socket head screws M10x50 class 12.9 Tightening torque = 70 Nm 2 socket head screws M6x45 class 12.9 Tightening torque = 15 Nm	4 OR 130; Diameter of ports A, B, P, T: Ø 20 mm (max) 2 OR 2043 Diameter of ports X, Y: Ø = 7 mm (max)
	4 = 25	6 socket head screws M12x60 class 12.9 Tightening torque = 125 Nm	4 OR 4112; Diameter of ports A, B, P, T: Ø 24 mm (max) 2 OR 3056 Diameter of ports X, Y: Ø = 7 mm (max)
	4M = 27	6 socket head screws M12x60 class 12.9 Tightening torque = 125 Nm	4 OR 3137; Diameter of ports A, B, P, T: Ø 32 mm (max) 2 OR 3056 Diameter of ports X, Y: Ø = 7 mm (max)
	6 = 32	6 socket head screws M20x80 class 12.9 Tightening torque = 600 Nm	4 OR 144; Diameter of ports A, B, P, T: Ø 34 mm (max) 2 OR 3056 Diameter of ports X, Y: Ø = 7 mm (max)

12 PLUGS LOCATION FOR PILOT/DRAIN CHANNELS

Depending on the position of internal plugs, different pilot/drain configurations can be obtained as shown below.
To modify the pilot/drain configuration, proper plugs must only be interchanged. The plugs have to be sealed using loctite 270.
Standard valves configuration provides internal pilot and external drain.

DPZO-1 **Pilot channels** **Drain channels**

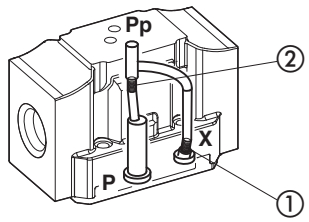

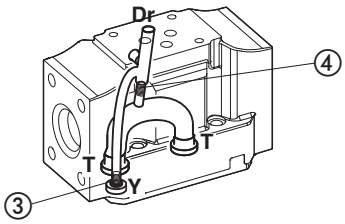

Internal piloting: blinded plug SP-X300F ① in X;
External piloting: blinded plug SP-X300F ② in Pp;
Internal drain: blinded plug SP-X300F ③ in Y;
External drain: blinded plug SP-X300F ④ in Dr.

DPZO-2 **Pilot channels** **Drain channels**

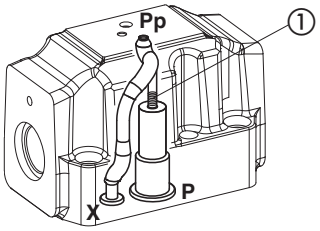

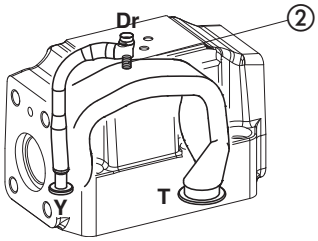

Internal piloting: Without blinded plug SP-X300F ①;
External piloting: Add blinded plug SP-X300F ①;
Internal drain: Without blinded plug SP-X300F ②;
External drain: Add blinded plug SP-X300F ②.

DPZO-4 **Pilot channels** **Drain channels**

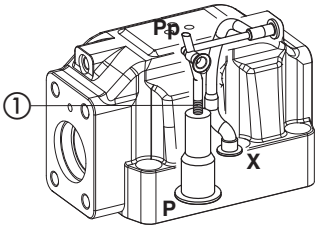

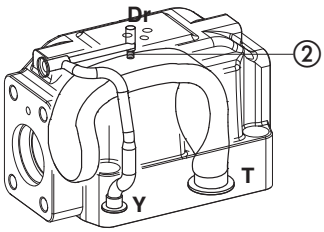

Internal piloting: Without blinded plug SP-X500F ①;
External piloting: Add blinded plug SP-X500F ①;
Internal drain: Without blinded plug SP-X300F ②;
External drain: Add blinded plug SP-X300F ②.

DPZO-6 **Pilot channels** **Drain channels**

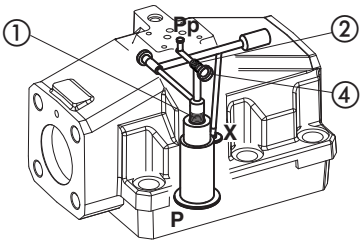

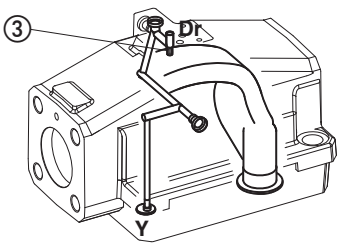

Internal piloting: Without plug ①;
External piloting: Add DIN-908 M16x1,5 in pos ①;
Internal drain: Without blinded plug SP-X300F ③;
External drain: Add blinded plug SP-X300F ③.

DPZO-L-1

ISO 4401: 2005
Mounting surface: 4401-05-05-0-05 (see table P005)

Mass [kg]	
DPZO-L-1	9

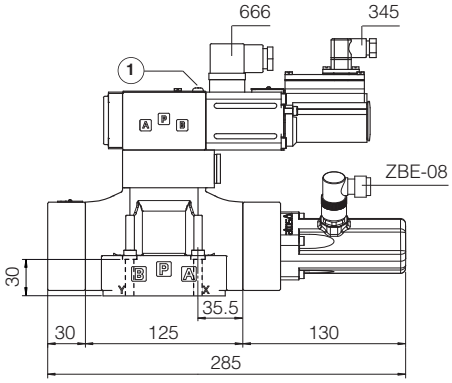

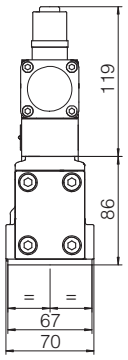

1 = Air bleeding 3

DPZO-L-2

ISO 4401: 2005
Mounting surface: 4401-07-07-0-05 (see table P005)

Mass [kg]	
DPZO-L-2	13,5

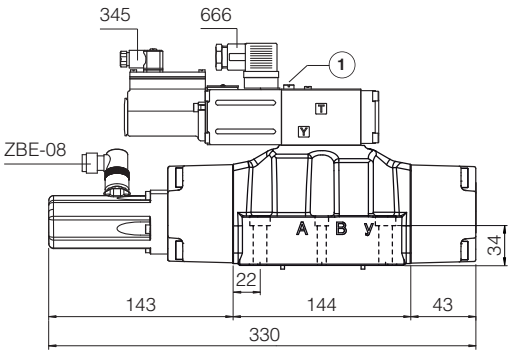

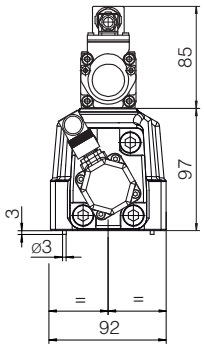

1 = Air bleeding 3

Notes: the overall height is increased by 30 mm for /G option (0,9 kg);
for option /B the proportional solenoid and the LVDT transducer are at side of port B of the main stage

DPZO-L-4

ISO 4401: 2005
Mounting surface: 4401-08-08-0-05(see table P005)

Mass [kg]	
DPZO-L-4	17,5

DPZO-L-4M

ISO 4401: 2005
Mounting surface: 4401-08-08-0-05(see table P005)
ports A, B, P, T Ø 32mm

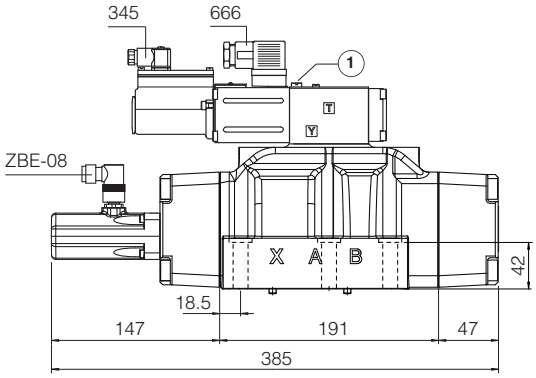

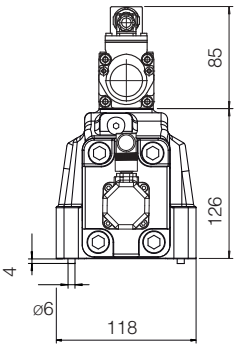

1 = Air bleeding 3

DPZO-L-6

ISO 4401: 2005
Mounting surface: 4401-10-09-0-05 (see table P005)

Mass [kg]	
DPZO-L-6	42,5

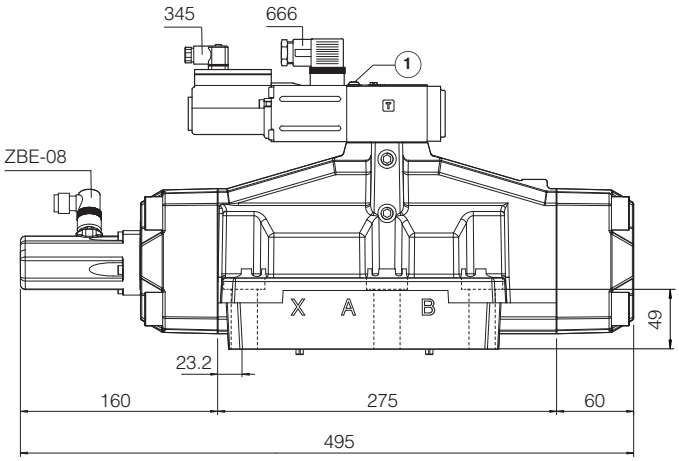

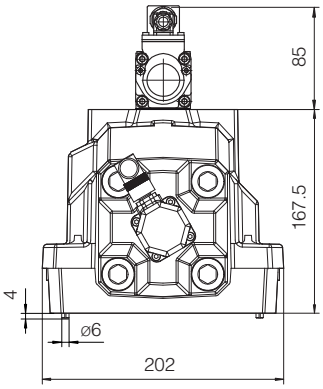

1 = Air bleeding 3

Notes: the overall height is increased by 40 mm for /G option (0,9 kg);
for option /B the proportional solenoid and the LVDT transducer are at side of port B of the main stage

14 RELATED DOCUMENTATION

FS001	Basics for digital electrohydraulics	**GS500**	Programming tools
FS900	Operating and maintenance information for proportional valves	**GS510**	Fieldbus
GS230	E-BM-LEB digital driver	**K800**	Electric and electronic connectors
GS240	E-BM-LES digital driver	**P005**	Mounting surfaces for electrohydraulic valves

Digital proportional directional valves high performance

piloted, with on-board driver, LVDT transducer and positive spool overlap

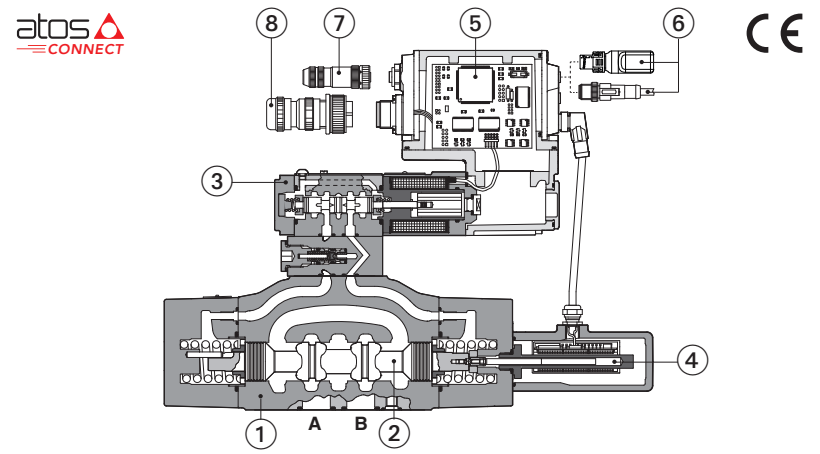

DPZO-TES-SN-BP-251

① Valve body
② Main stage Spool
③ Pilot valve
④ Main stage LVDT transducer
⑤ On-board digital driver
⑥ Bluetooth/USB connection
⑦ Fieldbus connectors
⑧ Main connector

DPZO-TEB, DPZO-TES

Digital proportional directional valves, piloted, specifically designed for directional and speed controls.

They are equipped with one LVDT position transducer (main stage) and positive spool overlap for best dynamics in directional controls and not compensated flow regulations.

TEB basic execution with analog reference signal or IO-Link interface for digital reference signals, valve settings, and real-time diagnostics.

TES full execution which includes also optional fieldbus interfaces for digital reference signals, valve settings, and real-time diagnostics.

Bluetooth/USB connection is always present for valve settings via mobile App and Atos PC software.

Size: **10** ÷ **32** - ISO 4401
Max flow: **180** ÷ **1600 l/min**
Max pressure: **350 bar**

1 MODEL CODE

DPZO - **TES** - **SN** - **NP** - **2** **71** - **L** **5** / * / * / * *

Proportional directional valve, piloted

TEB = basic on-board digital driver
TES = full on-board digital driver

Alternated P/Q controls:
SN = none

IO-Link interface, only for TEB, see section 6 :
NP = Not present **IL** = IO-Link

Fieldbus interfaces, only for TES, see section 7 :
NP = Not present
BC = CANopen **EW** = POWERLINK
BP = PROFIBUS DP **EI** = EtherNet/IP
EH = EtherCAT **EP** = PROFINET RT/IRT

Valve size ISO 4401:
1 = 10 **2** = 16 **4** = 25 **6** = 32

Configuration (1):

	Standard	Option **/B**
51 =	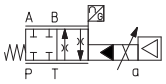	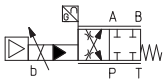
53 =	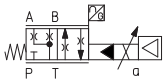	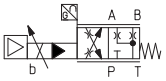
71 =	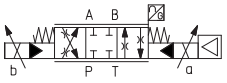	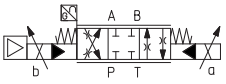
72 = (2)	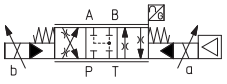	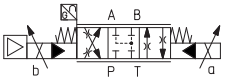
73 =	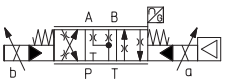	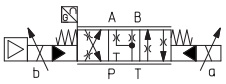

Series number

Seals material, see section 12 :
- = NBR
PE = FKM
BT = NBR low temperature

Safety options TÜV certified - only for TES **(3)**:
U = safe double power supply
K = safe on/off signals
See section 8

SAFETY CERTIFIED

Bluetooth option (2), see section 5 :
T = Bluetooth adapter supplied with the valve

Hydraulic options (3):
B = solenoid with on-board digital driver and LVDT transducer at side of port A of the main stage (side B of pilot valve)
D = internal drain
E = external pilot pressure

Electronic options (3), not available for TEB-SN-IL:
F = fault signal
I = current reference input and monitor 4÷20mA
Q = enable signal
Z = double power supply (only for TES), enable, fault and monitor signals - 12 pin connector

Spool size:	**3**	**5**	**5**	**5**
Spool type:	L, S, D	L, DL, S, D	L, S, D	L, S, D
Configuration:	51,53,71,73	51,53,71,73	51,53,71,73	72
DPZO-1 =	-	100	-	-
DPZO-2 =	160	250	-	250
DPZO-4 =	-	480	-	480
DPZO-6 =	-	-	640	-

Nominal flow (l/min) at Δp 10 bar P-T (see section 13)

Spool type, regulating characteristics, see section 16 :

L =linear
DL = differential-linear
P-A = Q, B-T = Q/2
P-B = Q/2, A-T = Q

S = progressive
D = differential-progressive
P-A = Q, B-T = Q/2
P-B = Q/2, A-T = Q

(1) For regenerative circuit select configuration 71 or 73 with specific spools D9 or L9, see section 2
(2) Only for DPZO sizes 2, 4 with spools L5, S5 or D5, see 13.5
(3) For possible combined option, see section 16

2 SPOOLS SPECIFIC FOR REGENERATIVE CIRCUIT - for valve model code and options, see section 1

DPZO	-	TES	-	SN	-	NP	-	2	71 - L9	/ * / * / *	*	/	*

Configuration and spool:

71-D9

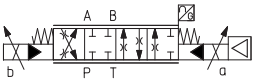

71-L9

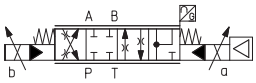

73-D9

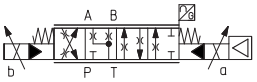

73-L9

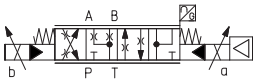

Spool type and size:

		D9	L9
DPZO-1	=	100	-
DPZO-2	=	250	250
DPZO-4	=	480	-

Nominal flow (l/min) at Δp 10bar P-T

D9

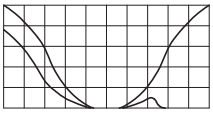

For regenerative circuit (additional external check valve required)

see 13.1 - diagram 19

L9

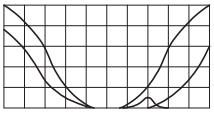

For regenerative circuit internal to the valve

see 13.1 - diagram 20

3 GENERAL NOTES

Atos digital proportionals valves are CE marked according to the applicable directives (e.g. Immunity and Emission EMC Directive).
Installation, wirings and start-up procedures must be performed according to the general prescriptions shown in tech table **FS900** and in the user manuals included in the E-SW-SETUP programming software.

4 VALVE SETTINGS AND PROGRAMMING TOOLS - see tech. table GS500

4.1 Atos CONNECT mobile App

Free downloadable App for smartphones and tablets which allows quick access to valve main functional parameters and basic diagnostic information via Bluetooth, thus avoiding physical cable connection and significantly reducing commissioning time.
Atos CONNECT supports Atos digital valve drivers equipped with E-A-BTH adapter or with built-in Bluetooth. It does not support valves with p/Q control or axis controls.

Download on the App Store

GET IT ON Google Play

4.2 E-SW-SETUP PC software

Free downloadable software for PC allows to set all valve functional parameters and to access complete diagnostic information of digital valve drivers via Bluetooth/USB service port.
Atos E-SW-SETUP PC software supports all Atos digital valve drivers and it is available at www.atos.com in MyAtos area.

WARNING: drivers USB port is not isolated! For E-C-SB-USB/M12 cable, the use of E-A-SB-USB/OPT isolator adapter is highly recommended for PC protection

Bluetooth or USB connection

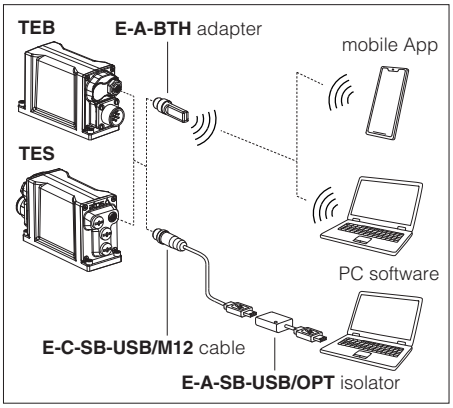

5 BLUETOOTH OPTION - see tech. table GS500

T option adds Bluetooth® connectivity to Atos valve drivers thanks to E-A-BTH adapter, which can be left permanently installed on-board, to allow the Bluetooth connection with the valve drivers at any time. E-A-BTH adapter can also be purchased separately and used to connect with any supported Atos digital product.
Bluetooth connection to the valve can be protected against unauthorised access by setting a personal password. The adapter leds visually indicates the status of valve driver and Bluetooth connection.

WARNING: for the list of countries where the Bluetooth adapter has been approved, see tech. table **GS500**
T option is not available for the Indian market, so the Bluetooth adapter must be ordered separately.

6 IO-LINK - only for TEB, see tech. table GS520

IO-Link allows low cost digital communication between the valve and machine central unit. The valve is directly connected to a port of an IO-Link master (point-to-point connection) via low-cost unshielded cables for digital reference, diagnostic and settings. The IO-Link master works as a hub exchanging this information with the machine central unit via fieldbus.

7 FIELDBUS - only for TES, see tech. table GS510

Fieldbus allows valve direct communication with machine control unit for digital reference, valve diagnostics and settings. These execution allow to operate the valves through fieldbus or analog signals available on the main connector.

8 SAFETY OPTIONS - only for TES

Atos range of proportional directional valves, provides functional safety options **/U** and **/K** ,
designed to accomplish a safety function, intended to reduce the risk in process control systems.
They are **TÜV certified** in compliance to **IEC 61508 up to SIL 3 and ISO 13849 up to category 4, PL e**

SAFETY CERTIFIED

Safe double power supply, option **/U**: the driver has separate power supplies for logic and solenoids. The safe condition is reached by cutting the electrical supply to solenoids, while electronics remains active for monitoring functions and fieldbus communication, see tech table **FY100**

Safety function via on/off signals, option **/K**: upon a disable command, the driver checks the spool position and it provides an on/off acknowledgement signal only when the valve is in safe condition, see tech table **FY200**

9 GENERAL CHARACTERISTICS

Assembly position	Any position
Subplate surface finishing to ISO 4401	Acceptable roughness index: Ra ≤0,8, recommended Ra 0,4 – Flatness ratio 0,01/100
MTTFd valves according to EN ISO 13849	75 years, for further details see technical table P007
Ambient temperature range	**Standard** = -20°C ÷ +60°C **/PE** option = -20°C ÷ +60°C **/BT** option = -40°C ÷ +60°C
Storage temperature range	**Standard** = -20°C ÷ +70°C **/PE** option = -20°C ÷ +70°C **/BT** option = -40°C ÷ +70°C
Surface protection	Zinc coating with black passivation, galvanic treatment (driver housing)
Corrosion resistance	Salt spray test (EN ISO 9227) > 200 h
Vibration resistance	See technical table G004
Compliance	CE according to EMC directive 2014/30/EU (Immunity: EN 61000-6-2; Emission: EN 61000-6-3) RoHS Directive 2011/65/EU as last update by 2015/863/EU REACH Regulation (EC) n°1907/2006

10 HYDRAULIC CHARACTERISTICS - based on mineral oil ISO VG 46 at 50 °C

Valve model		DPZO-*-1	DPZO-*-2		DPZO-*-4	DPZO-*-6
Pressure limits	[bar]	ports **P, A, B, X** = 350; **T** = 250 (10 for option /D); **Y** = 10;				
Spool type and size	standard	**L5, DL5, S5, D5**	**L3, S3, D3**	**L5, DL5, S5, D5**		**L5, S5, D5**
	regenerative	**D9**		**D9, L9**	**D9**	
Nominal flow Δp P-T **(1)**	[l/min]					
	Δp= 10 bar	100	160	250	480	640
	Δp= 30 bar	160	270	430	830	1100
	Max permissible flow	180	400	550	1000	1600
Piloting pressure	[bar]	min. = 25; max = 350				
Piloting volume	[cm³]	1,4	3,7		9,0	21,6
Piloting flow **(2)**	[l/min]	1,7	3,7		6,8	14,4
Leakage **(3)**	Pilot [cm³]	100 / 300	100 / 300		200 / 500	900 / 2800
	Main stage [l/min]	0,15 / 0,5	0,2 / 0,6		0,3 / 1,0	1,0 / 3,0
Response time **(4)**	[ms]	≤ 60	≤ 75		≤ 90	≤ 120
Hysteresis		≤ 1 [% of max regulation]				
Repeatability		± 0,5 [% of max regulation]				
Thermal drift		zero point displacement < 1% at ΔT = 40°C				

(1) For different Δp, the max flow is in accordance to the diagrams in section 13.2
(2) With step reference input signal 0 ÷100 %
(3) At p = 100/350 bar
(4) 0-100% step signal see detailed diagrams in section 13.3

11 ELECTRICAL CHARACTERISTICS

Power supplies	Nominal : +24 VDC Rectified and filtered : VRMS = 20 ÷ 32 VMAX (ripple max 10 % VPP)				
Max power consumption	50 W				
Max. solenoid current	2,6 A				
Coil resistance R at 20°C	3 ÷ 3,3 Ω				
Analog input signals	Voltage: range ±10 VDC (24 VMAX tolerant) Input impedance: Ri > 50 kΩ Current: range ±20 mA Input impedance: Ri = 500 Ω				
Monitor outputs	Output range: voltage ±10 VDC @ max 5 mA current ±20 mA @ max 500 Ω load resistance				
Enable input	Range: 0 ÷ 5 VDC (OFF state), 9 ÷ 24 VDC (ON state), 5 ÷ 9 VDC (not accepted); Input impedance: Ri > 10 kΩ				
Fault output	Output range: 0 ÷ 24 VDC (ON state > [power supply - 2 V] ; OFF state < 1 V) @ max 50 mA; external negative voltage not allowed (e.g. due to inductive loads)				
Alarms	Solenoid not connected/short circuit, cable break with current reference signal, over/under temperature, valve spool transducer malfunctions, alarms history storage function				
Insulation class	H (180°) Due to the occurring surface temperatures of the solenoid coils, the European standards ISO 13732-1 and EN982 must be taken into account				
Protection degree to DIN EN60529	IP66 / IP67 with mating connectors				
Duty factor	Continuous rating (ED=100%)				
Tropicalization	Tropical coating on electronics PCB				
Additional characteristics	Short circuit protection of solenoid's current supply; 3 leds for diagnostic (only for TES); spool position control by P.I.D. with rapid solenoid switching; protection against reverse polarity of power supply				
Communication interface	USB Atos ASCII coding	IO-Link Interface and System Specification 1.1.3	CANopen EN50325-4 + DS408	PROFIBUS DP EN50170-2/IEC61158	EtherCAT POWERLINK EtherNet/IP PROFINET IO RT/IRT IEC 61158
Communication physical layer	not insulated USB 2.0+USB OTG	SDCI class port B	optical insulated CAN ISO11898	optical insulated RS485	Fast Ethernet, insulated 100 Base TX
Recommended wiring cable	LiYCY shielded cables, see section 20				

Note: a maximum time of 800 ms (depending on communication type) has to be considered between the driver energizing with the 24 VDC power supply and when the valve is ready to operate. During this time the current to the valve coils is switched to zero.

12 SEALS AND HYDRAULIC FLUIDS - for other fluids not included in below table, consult our technical office

Seals, recommended fluid temperature	NBR seals (standard) = -20°C ÷ +60°C, with HFC hydraulic fluids = -20°C ÷ +50°C FKM seals (/PE option) = -20°C ÷ +80°C NBR low temp. seals (/BT option) = -40°C ÷ +60°C, with HFC hydraulic fluids = -20°C ÷ +50°C		
Recommended viscosity	20÷100 mm²/s - max allowed range 15 ÷ 380 mm²/s		
Max fluid contamination level — normal operation	ISO4406 class 18/16/13 NAS1638 class 7		see also filter section at www.atos.com or KTF catalog
Max fluid contamination level — longer life	ISO4406 class 16/14/11 NAS1638 class 5		
Hydraulic fluid	**Suitable seals type**	**Classification**	**Ref. Standard**
Mineral oils	NBR, FKM, NBR low temp.	HL, HLP, HLPD, HVLP, HVLPD	DIN 51524
Flame resistant without water	FKM	HFDU, HFDR	ISO 12922
Flame resistant with water	NBR, NBR low temp.	HFC	

13 DIAGRAMS (based on mineral oil ISO VG 46 at 50 °C)

13.1 Regulation diagrams (values measure at p 10 bar P-T)

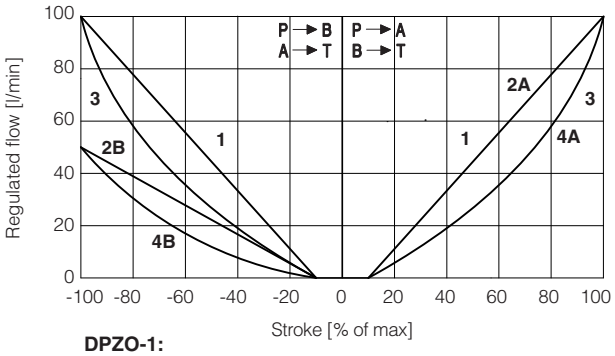

DPZO-1:
1 = L5 **2A** = DL5 (P → A, A → T) **4A** = D5 (P → A, A → T)
3 = S5 **2B** = DL5 (P → B, B → T) **4B** = D5 (P → B, B → T)

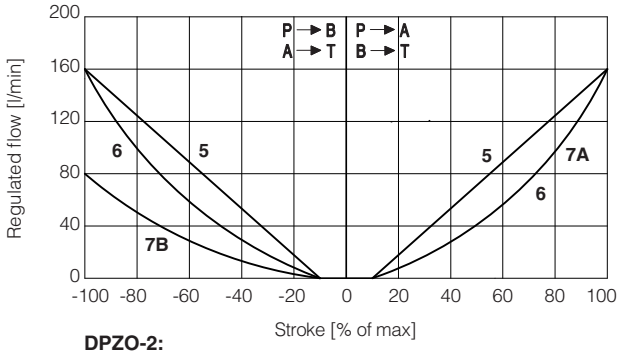

DPZO-2:
5 = L3 **7A** = D3 (P → A, A → T)
6 = S3 **7B** = D3 (P → B, B → T)

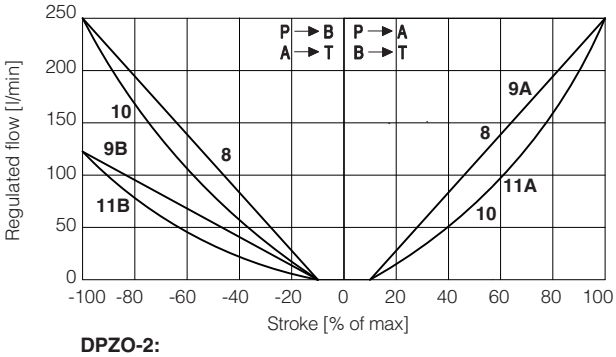

DPZO-2:
8 = L5 **9A** = DL5 (P → A, A → T) **11A** = D5 (P → A, A → T)
10 = S5 **9B** = DL5 (P → B, B → T) **11B** = D5 (P → B, B → T)

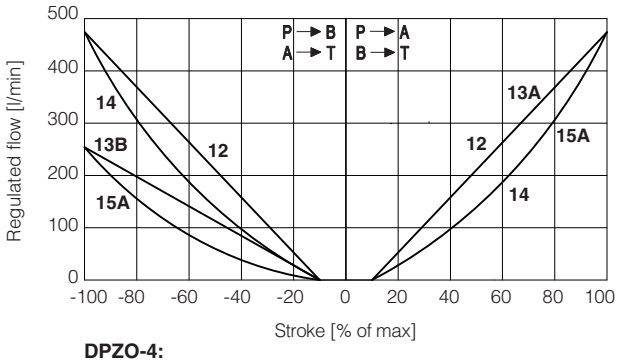

DPZO-4:
12=L5 **13A**=DL5 (P → A, A → T) **15A**=D5 (P → A, A → T)
14=S5 **13B**=DL5 (P → B, B → T) **15B**=D5 (P → B, B → T)

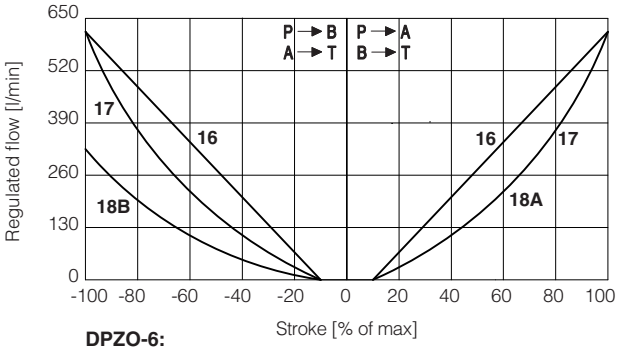

DPZO-6:
16 = L5 **18A** = D5 (P → A, A → T)
17 = S5 **18B** = D5 (P → B, B → T)

Note:
Hydraulic configuration vs. reference signal (standard and option /B)

Reference signal 0 ÷ +10 V / 12 ÷ 20 mA } P → A / B → T

Reference signal 0 ÷ -10 V / 12 ÷ 4 mA } P → B / A → T

19 = differential - regenerative spool **D9**
(not available for valve size 32)

D9 spool type with a fourth position specific to regenerative circuit, performed by means of an additional external check valve.

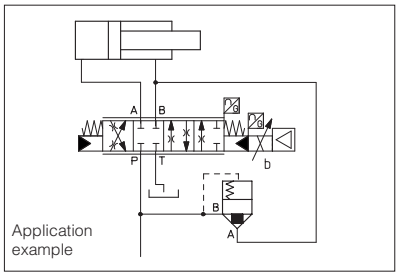

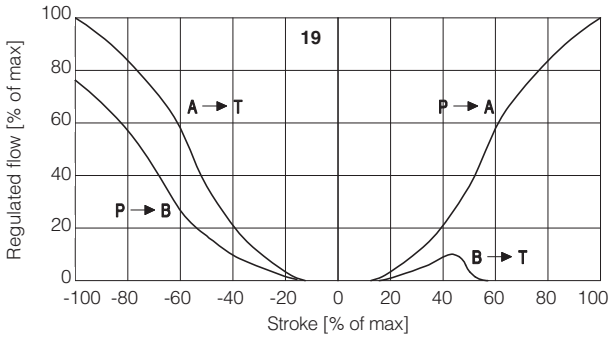

20 = linear - internal regenerative spool **L9**
(available only for valve size 16)

L9 spool type with a fourth position specific to perform a regenerative circuit internal to the valve.

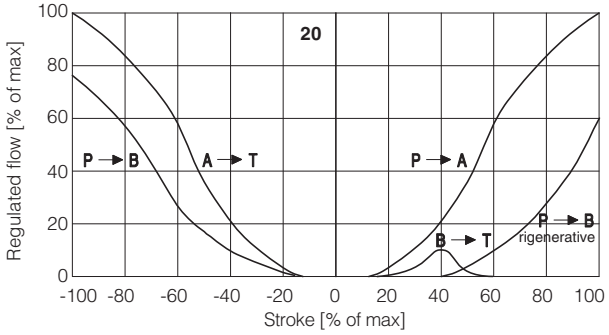

13.2 Operating diagrams

Flow /Δp diagram stated at 100% of spool stroke

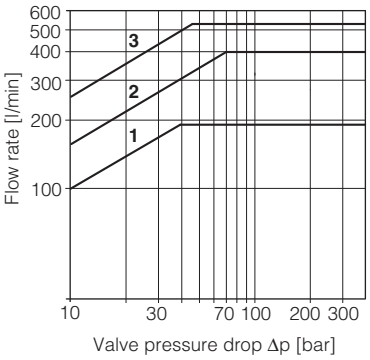

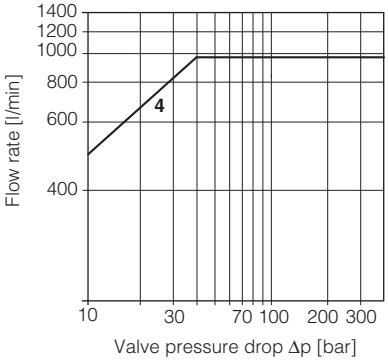

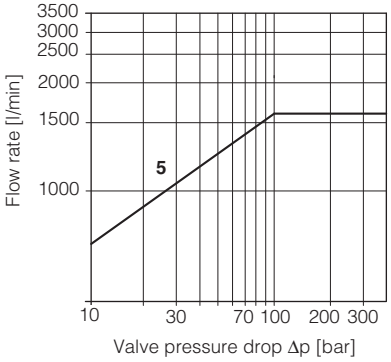

DPZO-1:
1 = spools L5, S5, D5, DL5, D9
DPZO-2:
2 = spools L3, S3, D3
3 = spools L5, S5, D5, DL5, D9, L9

DPZO-4:
4 = spools L5, S5, D5, DL5, D9

DPZO-6:
6 = L5, S5, D5

13.3 Response time

The response times in below diagrams are measured at different steps of the reference input signal. They have to be considered as average values.
For the valves with digital electronics the dynamics performances can be optimized by setting the internal software parameters.

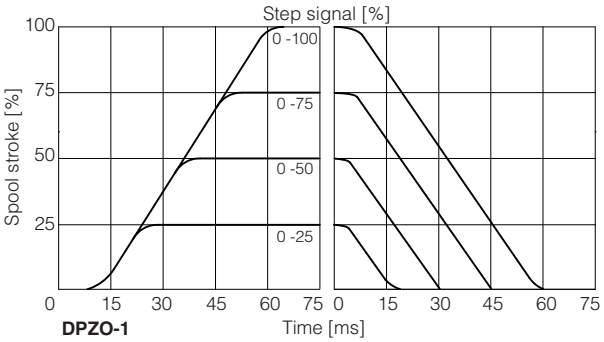

DPZO-1
DPZO-2

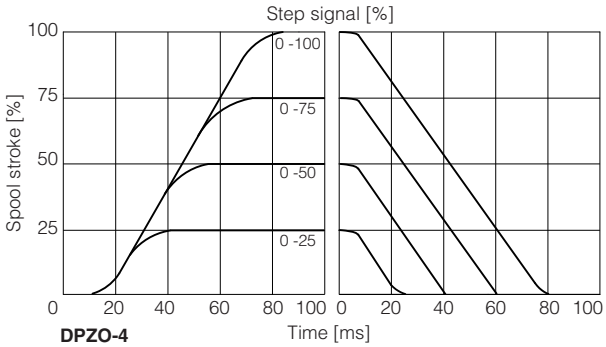

DPZO-4

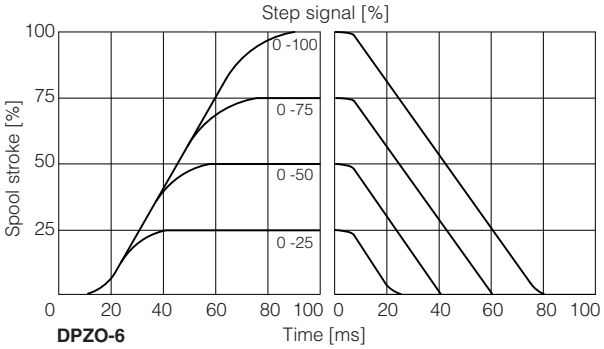

DPZO-6

13.4 Operation as throttle valve

Single solenoid valves (*51) can be used as simple throttle valves:
Pmax = 250 bar

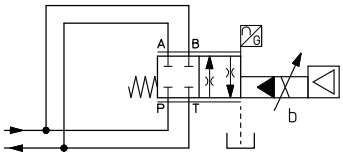

DPZO-*-	151-L5	251-L5	451-L5	651-L5
Max flow [l/min] Δp = 15 bar	320	860	1600	2200

13.5 Configuration 72

Only for **DPZO** sizes **2**, **4** with spools **L5** or **S5**: in central position the leakages P-A and P-B are drained to tank, avoiding the drift of cylinders with differential areas.

14 HYDRAULIC OPTIONS

B = Solenoid, on-board digital driver and LVDT transducer at side of port A of the main stage (side B of pilot valve). For hydraulic configuration vs reference signal, see 13.1

D = Internal drain (through port T).
Pilot and drain configuration can be modified as shown in the functional scheme here aside. For detailed view of plugs position, see section 22
The valve's standard configuration provides internal pilot and external drain.

E = External pilot (through port X).
Pilot and drain configuration can be modified as shown in the functional scheme here aside. For detailed view of plugs position, see section 22
The valve's standard configuration provides internal pilot and external drain.

① Pilot valve
② Main stage
③ Pressure reducing valve
④ Plug to be added for external pilot trough port X
⑤ Plug to be removed for internal drain through port T

Functional Scheme - example of configuration 71

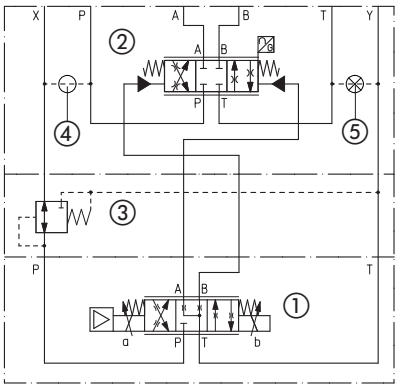

15 ELECTRONIC OPTIONS - not available for TEB-SN-IL

F = This option permits to monitor the eventual fault condition of the driver, as for example the solenoid short circuit/not connected, reference signal cable broken for option /I, spool position transducer broken, etc. - see 17.7 for signal specifications.

I = This option provides 4 ÷ 20 mA current reference and monitor signals, instead of the standard ±10 VDC.
Input signal can be reconfigured via software selecting between voltage and current, within a maximum range of ±10 VDC or ±20 mA.
It is normally used in case of long distance between the machine control unit and the valve or where the reference signal can be affected by electrical noise; the valve functioning is disabled in case of reference signal cable breakage.

Q = This option permits to inhibit the valve function without removing the power supply to the driver. Upon disable command the current to the solenoid is zeroed and the valve's spool moves to rest position.
The option /Q is suggested for all cases where the valve has to be frequently inhibited during the machine cycle – see 17.5 for signal specifications.

Z = This option provides, on the 12 pin main connector, the following additional features:
Fault output signal - see above option **/F**
Enable input signal - see above option **/Q**
Repeat enable output signal - only for **TEB-SN-NP** (see 17.6)
Power supply for driver's logics and communication - only for **TES** (see 17.2)

16 POSSIBLE COMBINED OPTIONS

Hydraulic options:
all combination possible

Electronic options - Standard versions:
TEB-SN, **TES-SN**
/FI, /IQ, /IZ

Electronic options - Safety certified versions:
TES-SN
/I/U, /I/K

Note: **/T** Bluetooth adapter option can be combined with all other options

17 POWER SUPPLY AND SIGNALS SPECIFICATIONS

Generic electrical output signals of the valve (e.g. fault or monitor signals) must not be directly used to activate safety functions, like to switch-ON/OFF the machine's safety components, as prescribed by the European standards (Safety requirements of fluid technology systems and components-hydraulics, ISO 4413).

For **TEB-SN-IL** signals see section 18

For certified safety options: **/U** see tech. table **FY100** and **/K** see tech. table **FY200**

17.1 Power supply (V+ and V0)

The power supply must be appropriately stabilized or rectified and filtered: apply at least a 10000 µF/40 V capacitance to single phase rectifiers or a 4700 µF/40 V capacitance to three phase rectifiers. In case of separate power supply see 17.2.

⚠ A safety fuse is required in series to each power supply: 2,5 A time lag fuse.

17.2 Power supply for driver's logic and communication (VL+ and VL0) - only for **TES** with **/Z** option

The power supply for driver's logic and communication must be appropriately stabilized or rectified and filtered: apply at least a 10000 µF/40 V capacitance to single phase rectifiers or a 4700 µF/40 V capacitance to three phase rectifiers.

The separate power supply for driver's logic on pin 9 and 10, allow to remove solenoid power supply from pin 1 and 2 maintaining active the diagnostics, USB and fieldbus communications.

⚠ A safety fuse is required in series to each driver's logic and communication power supply: 500 mA fast fuse.

17.3 Flow reference input signal (Q_INPUT+)

The driver controls in closed loop the valve spool position proportionally to the external reference input signal.

Reference input signal is factory preset according to selected valve code, defaults are ±10 VDC for standard and 4 ÷ 20 mA for /I option.

Input signal can be reconfigured via software selecting between voltage and current, within a maximum range of ±10 VDC or ± 20 mA.

Drivers with fieldbus interface can be software set to receive reference signal directly from the machine control unit (fieldbus reference).

Analog reference input signal can be used as on-off commands with input range 0 ÷ 24VDC.

17.4 Flow monitor output signal (Q_MONITOR) - not for **/F**

The driver generates an analog output signal proportional to the actual spool position of the valve; the monitor output signal can be software set to show other signals available in the driver (e.g. analog reference, fieldbus reference, pilot spool position).

Monitor output signal is factory preset according to selected valve code, defaults are ±10 VDC for standard and 4 ÷ 20 mA for /I option.

Output signal can be reconfigured via software selecting between voltage and current, within a maximum range of ±10 VDC or ± 20 mA.

17.5 Enable input signal (ENABLE) - not for standard and **/F**

To enable the driver, supply a 24 VDC on pin 3 (pin C): Enable input signal allows to enable/disable the current supply to the solenoid, without removing the electrical power supply to the driver; it is used to active the communication and the other driver functions when the valve must be disabled for safety reasons. This condition **does not comply** with norms IEC 61508 and ISO 13849.

Enable input signal can be used as generic digital input by software selection.

17.6 Repeat enable output signal (R_ENABLE) - only for **TEB-SN-NP** with **/Z** option

Repeat enable is used as output repeater signal of enable input signal (see 17.5).

17.7 Fault output signal (FAULT) - not for standard and **/Q**

Fault output signal indicates fault conditions of the driver (solenoid short circuits/not connected, reference signal cable broken for 4 ÷ 20 mA input, spool position transducer cable broken, etc.). Fault presence corresponds to 0 VDC, normal working corresponds to 24 VDC.

Fault status is not affected by the Enable input signal. Fault output signal can be used as digital output by software selection.

18 IO-LINK SIGNALS SPECIFICATIONS - only for **TEB-SN-IL**

18.1 Power supply for IO-Link communication (L+ and L-)

The IO-Link master provides dedicated 24 VDC power supply for IO-Link communication.

Maximum power consumption: 2 W

Internal electrical isolation of power L+, L- from P24, N24

18.2 Power supply for driver's logic and valve regulation (P24 and N24)

The IO-Link master provides dedicated 24 VDC power supply for valve regulation, logics and diagnostics.

Maximum power consumption: 50 W

Internal electrical isolation of power P24, N24 from L+, L-

18.3 IO-Link data line (C/Q)

C/Q signal is used to establish communication between IO-Link master and valve.

19 ELECTRONIC CONNECTIONS AND LEDS

19.1 Main connector signals - 7 pin - standard, /F and /Q options (A1)

PIN	Standard	/Q	/F	TECHNICAL SPECIFICATIONS	NOTES
A	**V+**			Power supply 24 VDC	Input - power supply
B	**V0**			Power supply 0 VDC	Gnd - power supply
C	**AGND**		**AGND**	Analog ground	Gnd - analog signal
		ENABLE		Enable (24 VDC) or disable (0 VDC) the valve, referred to V0	Input - on/off signal
D	**Q_INPUT+**			Flow reference input signal: ±10 VDC / ±20 mA maximum range Defaults are ±10 VDC for standard and 4 ÷ 20 mA for /I option	Input - analog signal **Software selectable**
E	**INPUT-**			Negative reference input signal for Q_INPUT+	Input - analog signal
F	**Q_MONITOR** referred to: AGND / V0			Flow monitor output signal: ±10 VDC / ±20 mA maximum range Defaults are ±10 VDC for standard and 4 ÷ 20 mA for /I option	Output - analog signal **Software selectable**
			FAULT	Fault (0 VDC) or normal working (24 VDC)	Output - on/off signal
G	**EARTH**			Internally connected to the driver housing	

19.2 Main connector signal - 12 pin - /Z option (A2)

PIN	TEB /Z	TES /Z	TECHNICAL SPECIFICATIONS	NOTES
1	**V+**		Power supply 24 VDC	Input - power supply
2	**V0**		Power supply 0 VDC	Gnd - power supply
3	**ENABLE** referred to: V0	VL0	Enable (24 VDC) or disable (0 VDC) the valve	Input - on/off signal
4	**Q_INPUT+**		Flow reference input signal: ±10 VDC / ±20 mA maximum range Defaults are ±10 VDC for standard and 4 ÷ 20 mA for /I option	Input - analog signal **Software selectable**
5	**INPUT-**		Negative reference input signal for Q_INPUT+	Input - analog signal
6	**Q_MONITOR** referred to: AGND	VL0	Flow monitor output signal: ±10 VDC / ±20 mA maximum range Defaults are ±10 VDC for standard and 4 ÷ 20 mA for /I option	Input - analog signal **Software selectable**
7	**AGND**		Analog ground	Output - analog signal
		NC	Do not connect	Gnd - analog signal
8	**R_ENABLE**		Repeat enable, output repeater signal of enable input, referred to V0	Output - on/off signal
		NC	Do not connect	
9	**NC**		Do not connect	
		VL+	Power supply 24 VDC for driver's logic and communication	Input - power supply
10	**NC**		Do not connect	
		VL0	Power supply 0 VDC for driver's logic and communication	Gnd - power supply
11	**FAULT** referred to: V0	VL0	Fault (0 VDC) or normal working (24 VDC)	Output - on/off signal
PE	**EARTH**		Internally connected to the driver housing	

Note: do not disconnect VL0 before VL+ when the driver is connected to PC USB port

19.3 IO-Link connector signals - M12 - 5 pin - Coding A, port class B (A) only for **TEB-SN-IL**

PIN	SIGNAL	TECHNICAL SPECIFICATIONS	NOTES
1	**L+**	Power supply 24 VDC for IO-Link communication	Input - power supply
2	**P24**	Power supply 24 VDC for valve regulation, logics and diagnostics	Input - power supply
3	**L-**	Power supply 0 VDC for IO-Link communication	Gnd - power supply
4	**C/Q**	IO-Link data line	Input / Output - signal
5	**N24**	Power supply 0 VDC for valve regulation, logics and diagnostics	Gnd - power supply

Note: L+, L- and P24, N24 are electrically isolated

19.4 Communications connectors (B) - (C)

(B) **USB connector - M12 - 5 pin** always present		
PIN	**SIGNAL**	**TECHNICAL SPECIFICATION** (1)
1	**+5V_USB**	Power supply
2	**ID**	Identification
3	**GND_USB**	Signal zero data line
4	**D-**	Data line -
5	**D+**	Data line +

(C1) (C2) **BC fieldbus execution, connector - M12 - 5 pin**		
PIN	**SIGNAL**	**TECHNICAL SPECIFICATION** (1)
1	**CAN_SHLD**	Shield
2	**not used**	(C1) - (C2) pass-through connection (2)
3	**CAN_GND**	Signal zero data line
4	**CAN_H**	Bus line (high)
5	**CAN_L**	Bus line (low)

(C1) (C2) **BP fieldbus execution, connector - M12 - 5 pin**		
PIN	**SIGNAL**	**TECHNICAL SPECIFICATION** (1)
1	**+5V**	Termination supply signal
2	**LINE-A**	Bus line (high)
3	**DGND**	Data line and termination signal zero
4	**LINE-B**	Bus line (low)
5	**SHIELD**	

(C1) (C2) **EH, EW, EI, EP fieldbus execution, connector - M12 - 4 pin**		
PIN	**SIGNAL**	**TECHNICAL SPECIFICATION** (1)
1	**TX+**	Transmitter
2	**RX+**	Receiver
3	**TX-**	Transmitter
4	**RX-**	Receiver
Housing	**SHIELD**	

(1) shield connection on connector's housing is recommended

(2) Pin 2 can be fed with external +5V supply of CAN interface

19.5 TEB-SN-NP connections layout

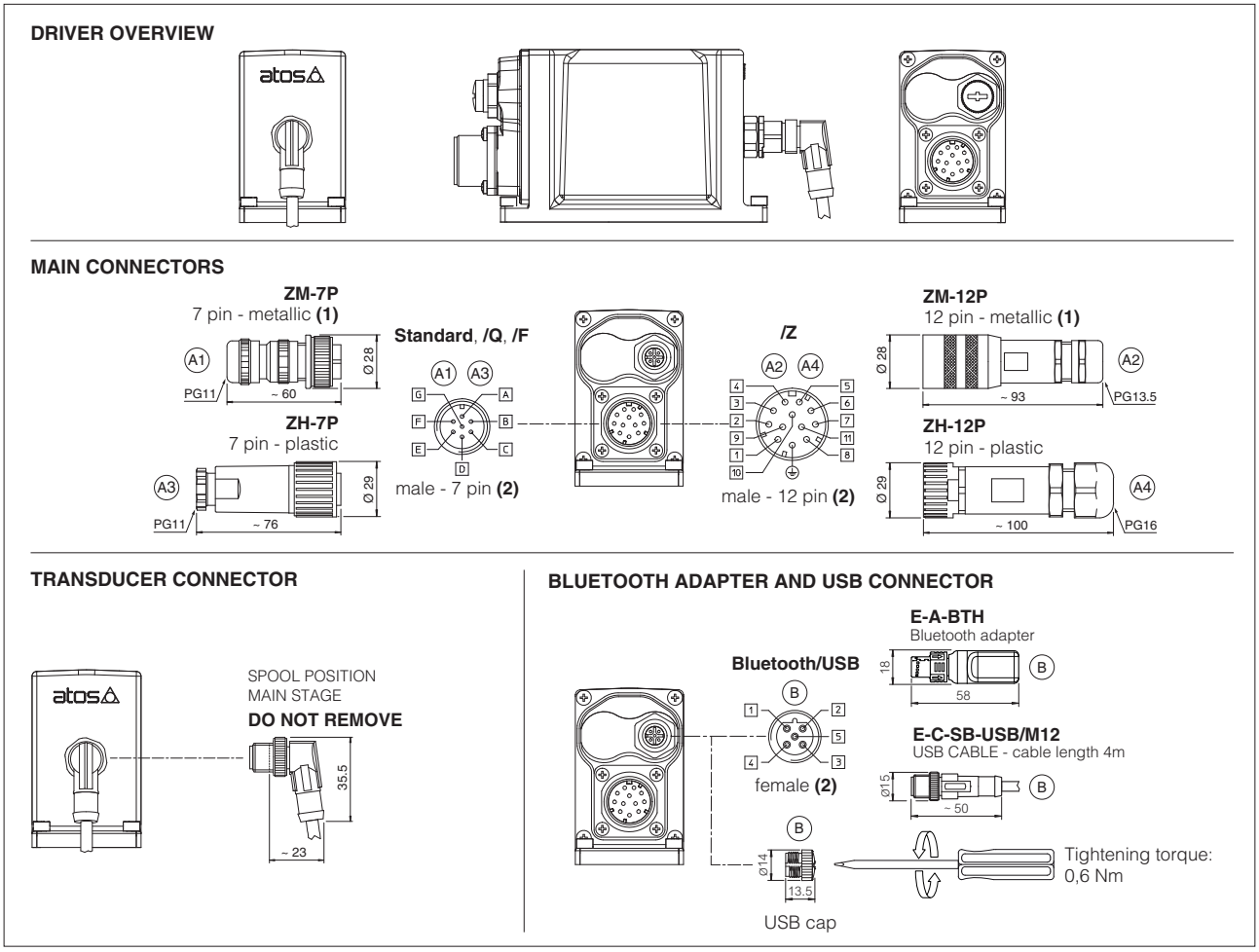

(1) Use of metallic connectors is strongly recommended in order to fulfill EMC requirements **(2)** Pin layout always referred to driver's view

19.6 TEB-SN-IL connections layout

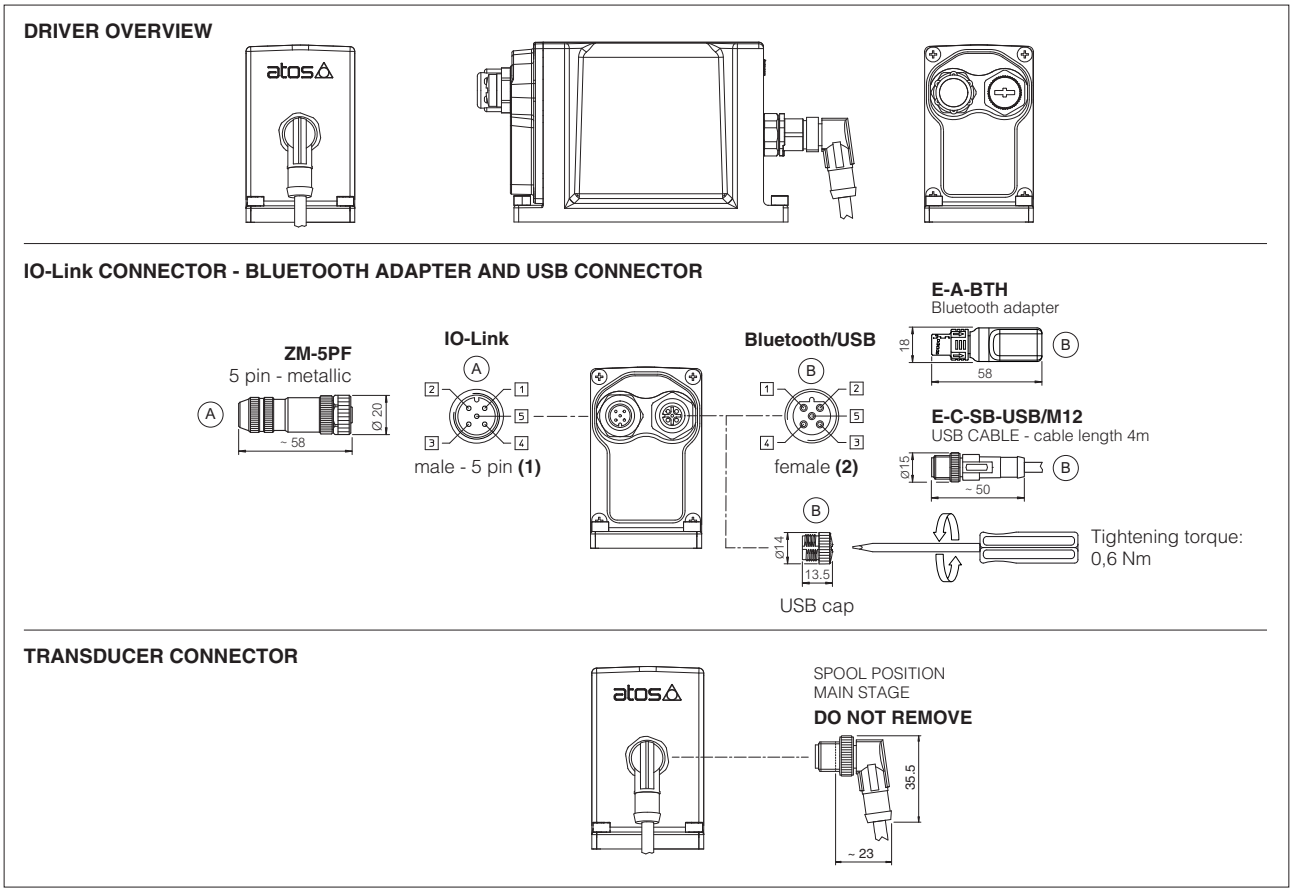

(1) Pin layout always referred to driver's view

19.7 TES connections layout

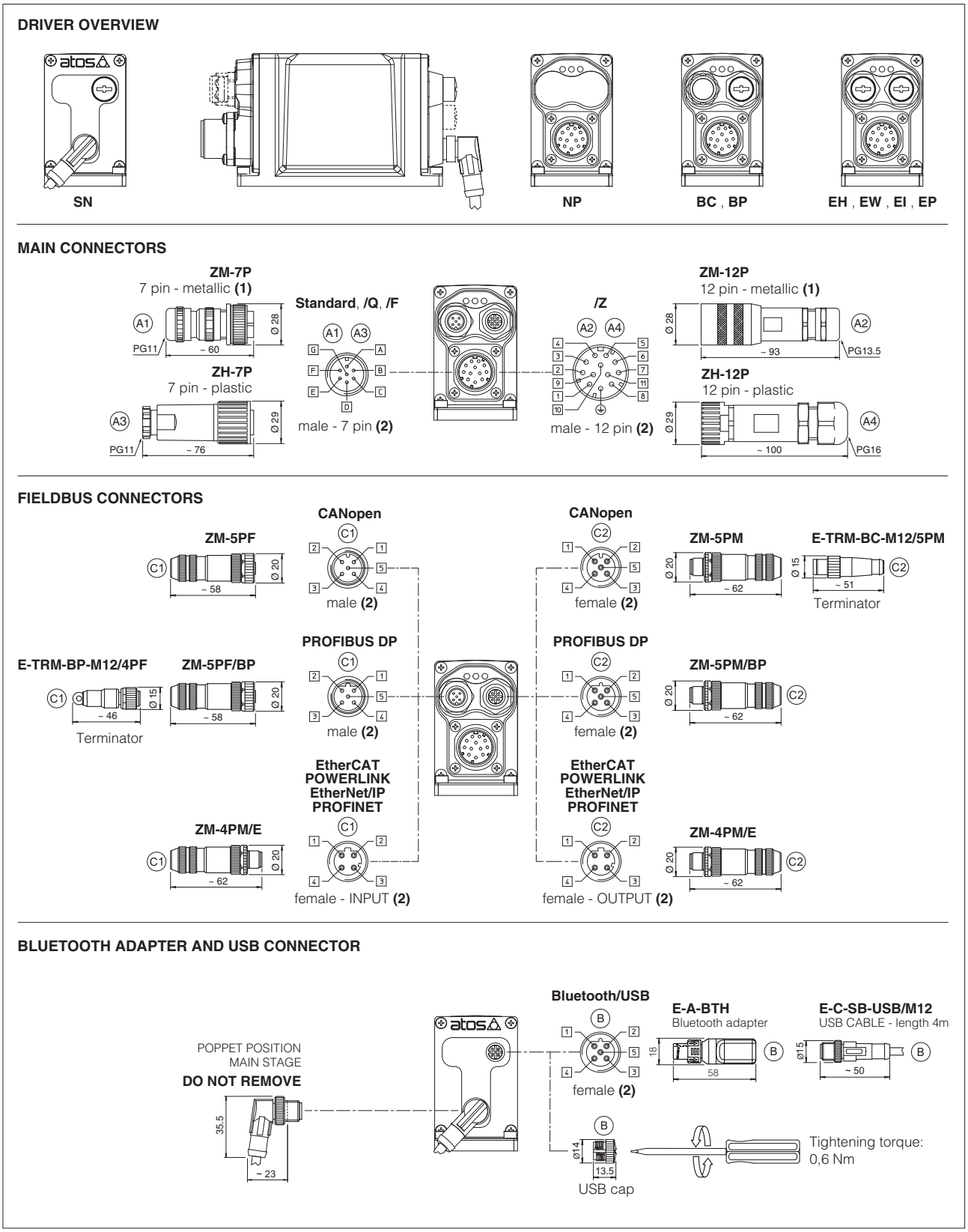

(1) Use of metallic connectors is strongly recommended in order to fulfill EMC requirements **(2)** Pin layout always referred to driver's view

19.8 Diagnostic LEDs - only for **TES**

Three leds show driver operative conditions for immediate basic diagnostics. Please refer to the driver user manual for detailed information.

FIELDBUS / LEDS	NP Not Present	BC CANopen	BP PROFIBUS DP	EH EtherCAT	EW POWERLINK	EI EtherNet/IP	EP PROFINET
L1	VALVE STATUS			LINK/ACT			
L2	NETWORK STATUS			NETWORK STATUS			
L3	SOLENOID STATUS			LINK/ACT			

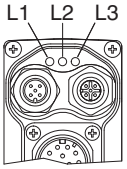

20 IN / OUT FIELDBUS COMMUNICATION CONNECTORS

Two fieldbus communication connectors are always available for digital drivers executions BC, BP, EH, EW, EI, EP. This features allows considerable technical advantages in terms of installation simplicity, wirings reduction and also avoid the usage expensive T-connectors.
For BC and BP executions the fieldbus connectors have an internal pass-through connection and can be used like end point of the fieldbus network, using an external terminator (see tech table **GS500**).
For EH, EW, EI and EP executions the external terminators are not required: each connector is internally terminated.

BC and BP pass-through connection

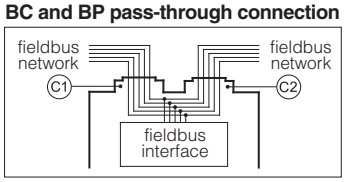

21 CONNECTORS CHARACTERISTICS - to be ordered separately

21.1 Main connectors - 7 pin

CONNECTOR TYPE	POWER SUPPLY AND SIGNALS	POWER SUPPLY AND SIGNALS
CODE	A1 ZM-7P	A3 ZH-7P
Type	7pin female straight circular	7pin female straight circular
Standard	According to MIL-C-5015	According to MIL-C-5015
Material	Metallic	Plastic reinforced with fiber glass
Cable gland	PG11	PG11
Recommended cable	LiYCY 7 x 0,75 mm² max 20 m (logic and power supply) or LiYCY 7 x 1 mm² max 40 m (logic and power supply)	LiYCY 7 x 0,75 mm² max 20 m (logic and power supply) or LiYCY 7 x 1 mm² max 40 m (logic and power supply)
Conductor size	up to 1 mm² - available for 7 wires	up to 1 mm² - available for 7 wires
Connection type	to solder	to solder
Protection (EN 60529)	IP 67	IP 67

21.2 Main connectors - 12 pin

CONNECTOR TYPE	POWER SUPPLY AND SIGNALS	POWER SUPPLY AND SIGNALS
CODE	A2 ZM-12P	A4 ZH-12P
Type	12pin female straight circular	12pin female straight circular
Standard	DIN 43651	DIN 43651
Material	Metallic	Plastic reinforced with fiber glass
Cable gland	PG13,5	PG16
Recommended cable	LiYCY 12 x 0,75 mm² max 20 m (logic and power supply)	LiYCY 10 x 0,14mm² max 40 m (logic) LiYY 3 x 1mm² max 40 m (power supply)
Conductor size	0,5 mm² to 1,5 mm² - available for 12 wires	0,14 mm² to 0,5 mm² - available for 9 wires 0,5 mm² to 1,5 mm² - available for 3 wires
Connection type	to crimp	to crimp
Protection (EN 60529)	IP 67	IP 67

21.3 IO-Link connector - only for **TEB-SN-IL**

CONNECTOR TYPE	IL IO-Link
CODE	A ZM-5PF
Type	5pin female straight circular
Standard	M12 coding A – IEC 61076-2-101
Material	Metallic
Cable gland	Pressure nut - cable diameter 6÷8 mm
Recommended cable	5 x 0,75 mm² max 20 m
Connection type	screw terminal
Protection (EN 60529)	IP 67

21.4 Fieldbus communication connectors

CONNECTOR TYPE	BC CANopen (1)		BP PROFIBUS DP (1)		EH EtherCAT, EW POWERLINK, EI EtherNet/IP, EP PROFINET (2)
CODE	C1 ZM-5PF	C2 ZM-5PM	C1 ZM-5PF/BP	C2 ZM-5PM/BP	C1 C2 ZM-4PM/E
Type	5 pin female straight circular	5 pin male straight circular	5 pin female straight circular	5 pin male straight circular	4 pin male straight circular
Standard	M12 coding A – IEC 61076-2-101		M12 coding B – IEC 61076-2-101		M12 coding D – IEC 61076-2-101
Material	Metallic		Metallic		Metallic
Cable gland	Pressure nut - cable diameter 6÷8 mm		Pressure nut - cable diameter 6÷8 mm		Pressure nut - cable diameter 4÷8 mm
Cable	CANbus Standard (DR 303-1)		PROFIBUS DP Standard		Ethernet standard CAT-5
Connection type	screw terminal		screw terminal		terminal block
Protection (EN 60529)	IP67		IP 67		IP 67

(1) E-TRM-** terminators can be ordered separately - see tech table **GS500**

(2) Internally terminated

22 PLUGS LOCATION FOR PILOT/DRAIN CHANNELS

Depending on the position of internal plugs, different pilot/drain configurations can be obtained as shown below.
To modify the pilot/drain configuration, proper plugs must only be interchanged. The plugs have to be sealed using loctite 270.
Standard valves configuration provides internal pilot and external drain

DPZO-1 **Pilot channels** **Drain channels**

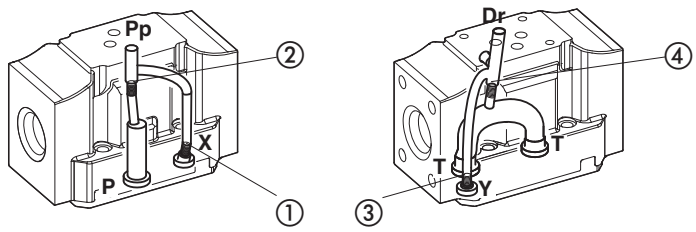

Internal piloting: blinded plug SP-X300F ① in X;
External piloting: blinded plug SP-X300F ② in Pp;
Internal drain: blinded plug SP-X300F ③ in Y;
External drain: blinded plug SP-X300F ④ in Dr.

DPZO-2 **Pilot channels** **Drain channels**

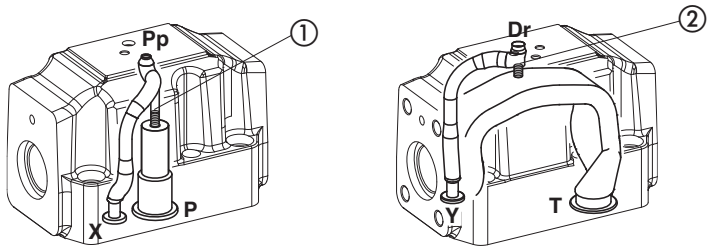

Internal piloting: Without blinded plug SP-X300F ①;
External piloting: Add blinded plug SP-X300F ①;
Internal drain: Without blinded plug SP-X300F ②;
External drain: Add blinded plug SP-X300F ②.

DPZO-4 **Pilot channels** **Drain channels**

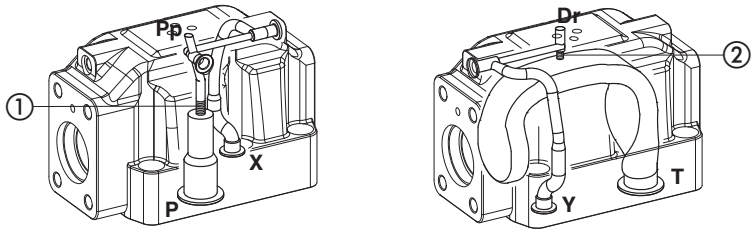

Internal piloting: Without blinded plug SP-X500F ①;
External piloting: Add blinded plug SP-X500F ①;
Internal drain: Without blinded plug SP-X300F ②;
External drain: Add blinded plug SP-X300F ②.

DPZO-6 **Pilot channels** **Drain channels**

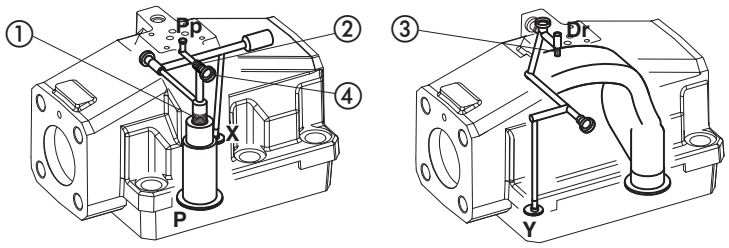

Internal piloting: Without plug ①;
External piloting: Add DIN-908 M16x1,5 in pos ①;
Internal drain: Without blinded plug SP-X300F ③;
External drain: Add blinded plug SP-X300F ③.

23 FASTENING BOLTS AND SEALS

Type	Size	Fastening bolts	Seals
DPZO	**1** = 10	4 socket head screws M6x40 class 12.9 Tightening torque = 15 Nm	5 OR 2050 Diameter of ports A, B, P, T: Ø 11 mm (max) 2 OR 108 Diameter of ports X, Y: Ø = 5 mm (max)
	2 = 16	4 socket head screws M10x50 class 12.9 Tightening torque = 70 Nm 2 socket head screws M6x45 class 12.9 Tightening torque = 15 Nm	4 OR 130 Diameter of ports A, B, P, T: Ø 20 mm (max) 2 OR 2043 Diameter of ports X, Y: Ø = 7 mm (max)
	4 = 25	6 socket head screws M12x60 class 12.9 Tightening torque = 125 Nm	4 OR 4112 Diameter of ports A, B, P, T: Ø 24 mm (max) 2 OR 3056 Diameter of ports X, Y: Ø = 7 mm (max)
	6 = 32	6 socket head screws M20x80 class 12.9 Tightening torque = 600 Nm	4 OR 144 Diameter of ports A, B, P, T: Ø 34 mm (max) 2 OR 3056 Diameter of ports X, Y: Ø = 7 mm (max)

24 INSTALLATION DIMENSIONS [mm]

ISO 4401: 2005
Mounting surface: 4401-05-05-0-05
(see table P005)

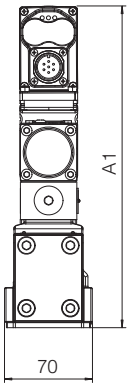

DPZO-TEB-*-15
DPZO-TES-*-15

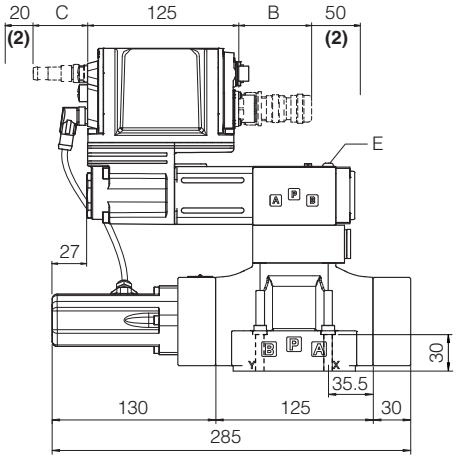

DPZO-TEB-*-17
DPZO-TES-*-17

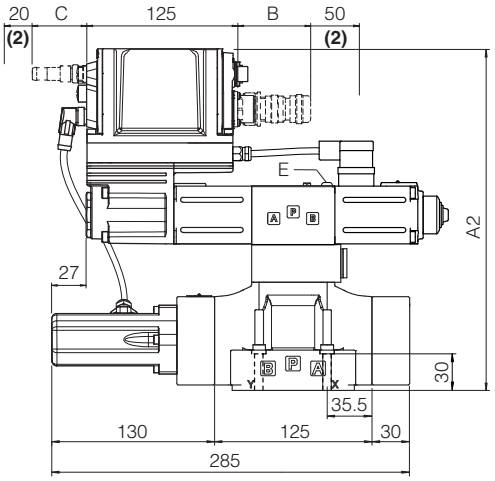

DPZO-*-1	A1	A2	B (1)	C (1)	E (air bleeding)	Mass [kg]	
TEB - SN - IL	256	271	60	-	3	DPZO-*-15	DPZO-*-17
TEB - SN - NP	256	271	100	-			
TES - SN - NP, BC, BP, EH	256	271	100	58		9,8	10,5
TES - SN - EW, EI, EP	271	271	100	58			

(1) The indicated dimension refers to the longer connectors or Bluetooth adapter
For dimensions of connectors and Bluetooth adapter, see sections 19.5, 19.6 and 19.7
(2) Space required for connection cable and for connector removal

Note: for /B option the proportional solenoid, the LVDT transducer and the on-board digital driver are at side of port A of the main stage

ISO 4401: 2005
Mounting surface: 4401-07-07-0-05
(see table P005)

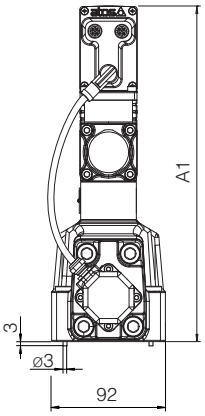

DPZO-TEB-*-25
DPZO-TES-*-25

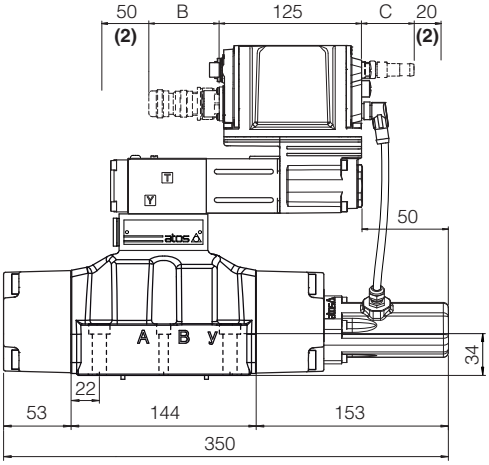

DPZO-TEB-*-27
DPZO-TES-*-27

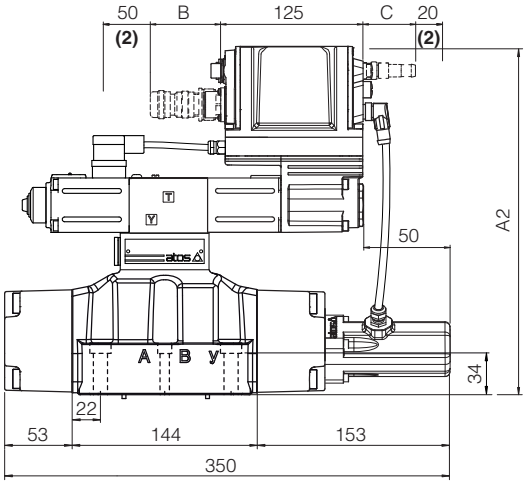

DPZO-*-2	A1	A2	B (1)	C (1)	E (air bleeding)	Mass [kg]	
TEB - SN - IL	237	252	60	-	3	DPZO-*-25	DPZO-*-27
TEB - SN - NP	237	252	100	-			
TES - SN - NP, BC, BP, EH	237	252	100	58		14,4	15,1
TES - SN - EW, EI, EP	252	252	100	58			

(1) The indicated dimension refers to the longer connectors or Bluetooth adapter
For dimensions of connectors and Bluetooth adapter, see sections 19.5, 19.6 and 19.7
(2) Space required for connection cable and for connector removal

Note: for /B option the proportional solenoid, the LVDT transducer and the on-board digital driver are at side of port A of the main stage

ISO 4401: 2005
Mounting surface: 4401-08-08-0-05
(see table P005)

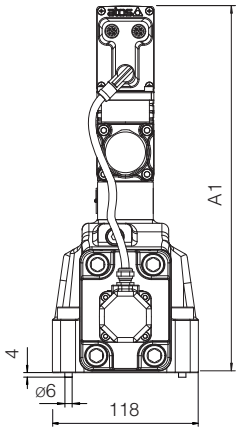

DPZO-TEB-*-45
DPZO-TES-*-45

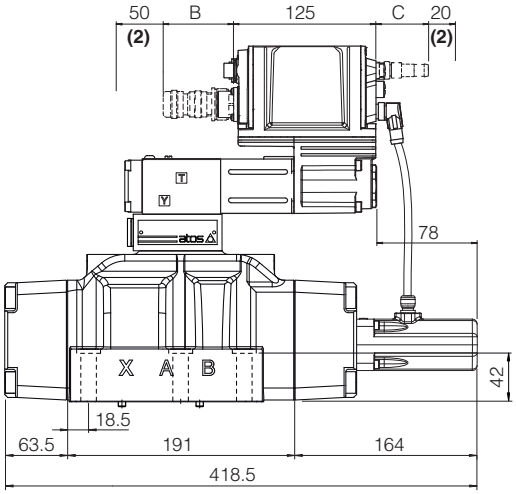

DPZO-TEB-*-47
DPZO-TES-*-47

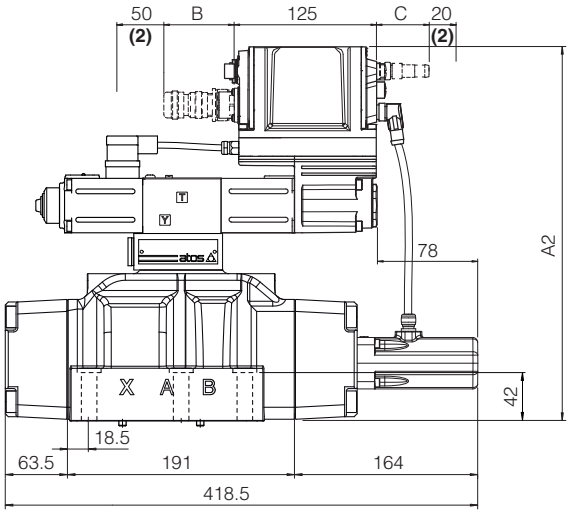

DPZO-*-4	A1	A2	B (1)	C (1)	E (air bleeding)	Mass [kg]	
TEB - SN - IL	266	281	60	-	3	DPZO-*-45	DPZO-*-47
TEB - SN - NP	266	281	100	-			
TES - SN - NP, BC, BP, EH	266	281	100	58		18,9	19,6
TES - SN - EW, EI, EP	281	281	100	58			

(1) The indicated dimension refers to the longer connectors or Bluetooth adapter
For dimensions of connectors and Bluetooth adapter, see sections 19.5, 19.6 and 19.7
(2) Space required for connection cable and for connector removal

Note: for /B option the proportional solenoid, the LVDT transducer and the on-board digital driver are at side of port A of the main stage

ISO 4401: 2005
Mounting surface: 4401-10-09-0-05
(see table P005)

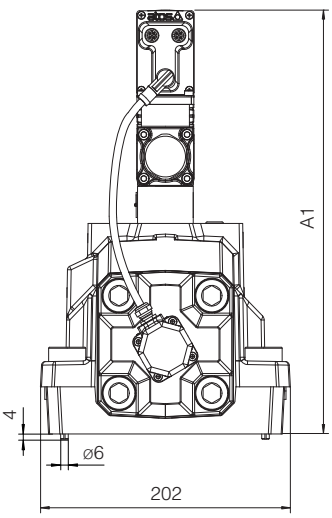

DPZO-TEB-*-65
DPZO-TES-*-65

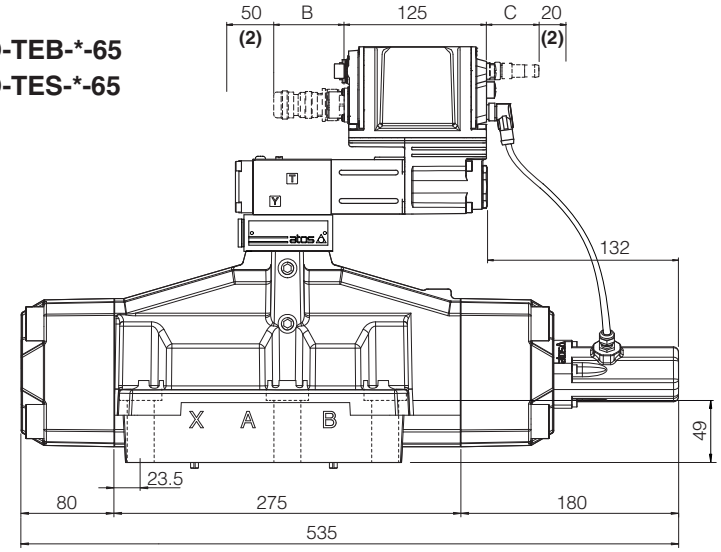

DPZO-TEB-*-67
DPZO-TES-*-67

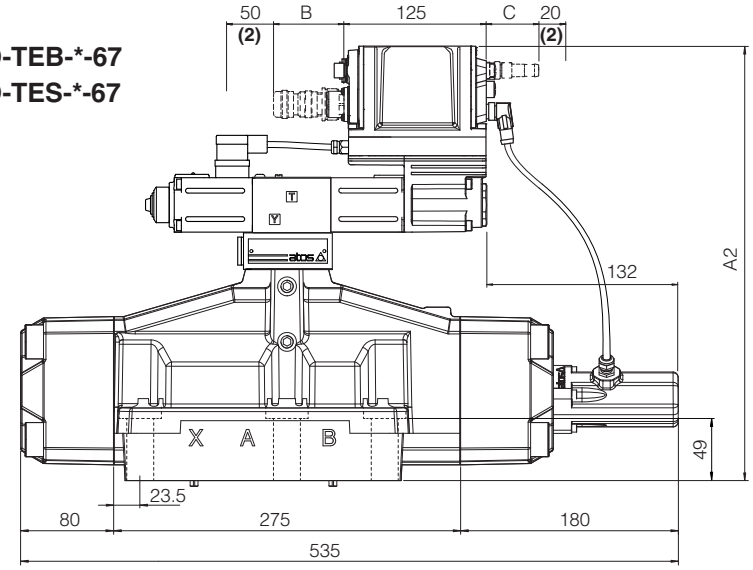

DPZO-*-6	A1	A2	B (1)	C (1)	E (air bleeding)	Mass [kg]	
TEB - SN - IL	308	323	60	-	3	DPZO-*-65	DPZO-*-67
TEB - SN - NP	308	323	100	-			
TES - SN - NP, BC, BP, EH	308	323	100	58		43,4	44,1
TES - SN - EW, EI, EP	323	323	100	58			

(1) The indicated dimension refers to the longer connectors or Bluetooth adapter
For dimensions of connectors and Bluetooth adapter, see sections 19.5, 19.6 and 19.7
(2) Space required for connection cable and for connector removal

Note: for /B option the proportional solenoid, the LVDT transducer and the on-board digital driver are at side of port A of the main stage

25 RELATED DOCUMENTATION

FS001	Basics for digital electrohydraulics
FS900	Operating and maintenance information for proportional valves
FY100	Safety proportional valves - option /U
FY200	Safety proportional valves - option /K
GS500	Programming tools
GS510	Fieldbus
GS520	IO-Link interface
K800	Electric and electronic connectors
P005	Mounting surfaces for electrohydraulic valves
QB320	Quickstart for TEB valves commissioning
QF320	Quickstart for TES valves commissioning
Y010	Basics for safety components
E-MAN-RI-LEB	TEB/LEB user manual
E-MAN-RI-LES	TES/LES user manual

Digital proportional directional valves high performance

piloted, with on-board driver, LVDT transducer and positive spool overlap

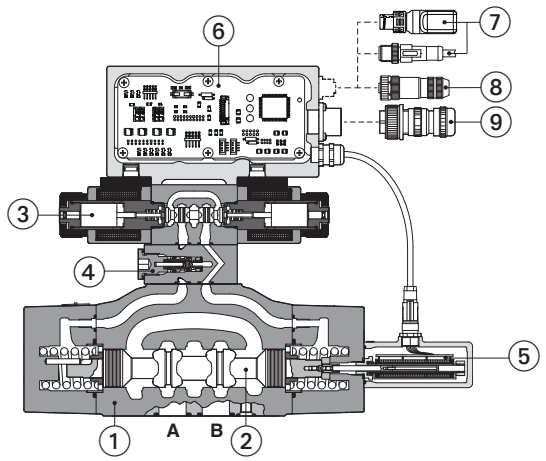

DPZE-TID-*-271

① Valve body
② Main stage Spool
③ Pilot valve
④ Pilot pressure reducing (standard)
⑤ Main stage LVDT transducer
⑥ On-board digital driver
⑦ Bluetooth/USB connection - only for TID-NP
⑧ CANopen connector - only for TID-BC
⑨ Main connector

DPZE-TID

Digital high performances proportional directional valves, piloted, with LVDT position transducer (main stage) and positive spool overlap for directional controls and not compensated flow regulations.

TID on-board digital driver performs the valve's hydraulic regulation according to the reference signal, analog for TID-NP or CANopen for TID-BC.

For **TID-NP**, Bluetooth/USB connection is always present for valve settings via mobile App and Atos PC software.

For **TID-BC**, CANopen interface is always present for valve settings via fieldbus and Atos PC software.

The LVDT transducer grants high regulation accuracy and response sensitivity.
With de-energized proportional solenoids, the mechanical central position of the spool is performed by centering springs.

Size: **16** ÷ **32** - ISO 4401
4/3 and 4/2 way with standard spools
4/4 way with regenerative spools
Max flow: **400** ÷ **1600 l/min**
Max pressure: **350 bar**

1 MODEL CODE OF STANDARD SPOOLS

DPZE	-	TID	-	NP	-	2	71	-	L	5	/	*	/	*	*	/	*

Proportional directional valve, piloted

TID = on-board digital driver and LVDT transducer

Fieldbus interfaces:
NP = Not present (USB port available)
BC = CANopen (USB port not available) **(1)**

Valve size ISO 4401:
2 = 16 **4** = 25 **6** = 32

Series number

Seals material, see section 10 :
- = NBR
PE = FKM

Bluetooth option (2), only for TID-NP, see section 5 :
T = Bluetooth adapter supplied with the valve

Hydraulic options (2) (3):
B = on-board digital driver, connectors and LVDT position transducer at side of port A of the main stage (side B of pilot valve)
D = internal drain
E = external pilot pressure

Electronic options, only for **TID-NP (2)**:
I = current reference input and monitor 4÷20mA
J = current reference input 4÷20mA and voltage monitor ±10 VDC

Configuration: **Standard** Option **/B**

71 =

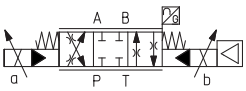

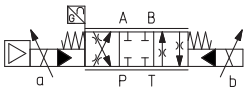

72 = (2)

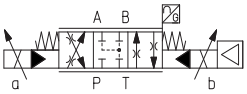

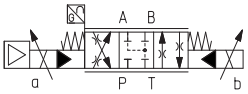

73 =

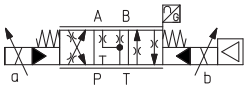

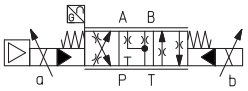

Spool size:	**3**	**5**	**5**	**5**
Spool type:	L, S, D	L, DL, S, D	L, S, D	L, S, D
Configuration:	71, 73	71, 73	71, 73	72
DPZE-2 =	160	250	-	250
DPZE-4 =	-	480	-	480
DPZE-6 =	-	-	640	-

Nominal flow (l/min) at Δp 10 bar P-T (see section 7)

Spool type, regulating characteristics **(4)**, see section 10 :

L = linear
DL = differential-linear
P-A = Q, B-T = Q/2
P-B = Q/2, A-T = Q

S = progressive
D = differential-progressive
P-A = Q, B-T = Q/2
P-B = Q/2, A-T = Q

(1) Reference and monitor signals only via CANopen (analog signals not available)
(2) Only for DPZE sizes 2, 4, with spools L5, S5 or D5 see 10.4
(3) For possible combined options, see section 13
(4) Pilot and Drain configuration: standard configuration is internal pilot and external drain, other configurations on request
(5) For regenerative circuit select configuration 71 or 73 with specific spools D9 or L9, see section 2

2 SPOOLS SPECIFIC FOR REGENERATIVE CIRCUIT - for valve model code and options, see section 1

DPZE	-	TID	-	NP	-	2	71 - L9	/	*	/	*	*	/	*

Configuration and spool:

Standard | Option **/B**

71-D9

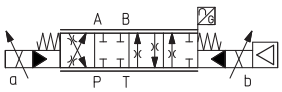

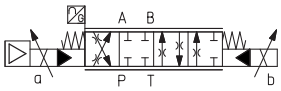

71-L9

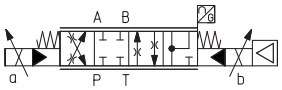

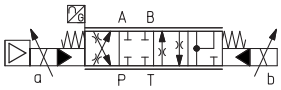

73-D9

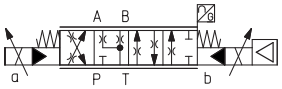

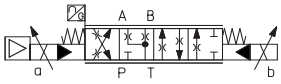

73-L9

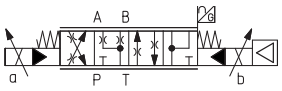

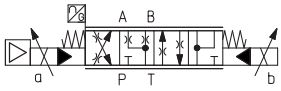

D9

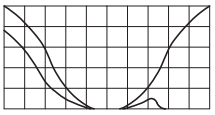

For regenerative circuit (additional external check valve required)

see 10.1 - diagram 19

L9

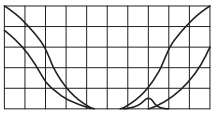

For regenerative circuit internal to the valve

see 10.1 - diagram 20

Spool type and size:

		D9	L9
DPZO-2	=	250	250
DPZO-4	=	480	-
DPZO-6	=	-	-

Nominal flow (l/min) at Δp 10bar P-T

3 GENERAL NOTES

Atos digital proportionals valves are CE marked according to the applicable directives (e.g. Immunity and Emission EMC Directive).
Installation, wirings and start-up procedures must be performed according to the general prescriptions shown in tech table **FS900** and in the user manuals included in the E-SW-SETUP programming software.

4 VALVE SETTINGS AND PROGRAMMING TOOLS - see tech. table **GS500**

4.1 TID-NP

Atos CONNECT mobile App

Free downloadable App for smartphones and tablets which allows quick access to valve main functional parameters and basic diagnostic information via Bluetooth, thus avoiding physical cable connection and significantly reducing commissioning time.
Atos CONNECT supports Atos digital valve drivers equipped with E-A-BTH adapter or with built-in Bluetooth. It does not support valves with p/Q control or axis controls.

Download on the App Store

GET IT ON Google Play

E-SW-SETUP PC software

Free downloadable software for PC allows to set all valve functional parameters and to access complete diagnostic information of digital valve drivers via Bluetooth/USB service port.
Atos E-SW-SETUP PC software supports all Atos digital valve drivers and it is available at www.atos.com in MyAtos area.

WARNING: drivers USB port is not isolated! For E-C-SB-USB/M12 cable, the use of E-A-SB-USB/OPT isolator adapter is highly recommended for PC protection

Bluetooth or USB connection

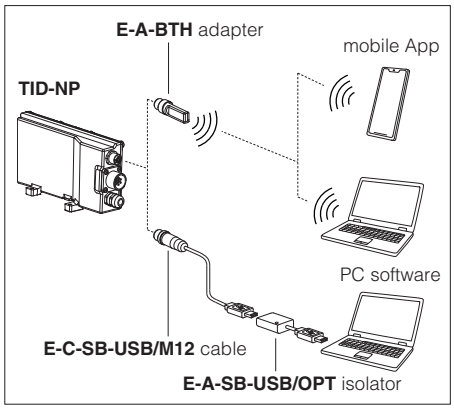

4.2 TID-BC

E-SW-SETUP PC software

Free downloadable software for PC allows to set all valve functional parameters and to access complete diagnostic information of digital valve drivers via CANopen connector.
Atos E-SW-SETUP PC software supports all Atos digital valve drivers and it is available at www.atos.com in MyAtos area.

CANopen connection

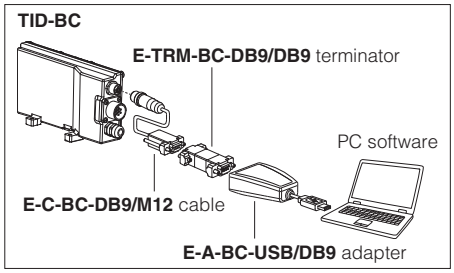

5 BLUETOOTH OPTION - only for TID-NP - see tech. table **GS500**

T option adds Bluetooth® connectivity to Atos valve drivers thanks to E-A-BTH adapter, which can be left permanently installed on-board, to allow the Bluetooth connection with the valve drivers at any time. E-A-BTH adapter can also be purchased separately and used to connect with any supported Atos digital product.
Bluetooth connection to the valve can be protected against unauthorised access by setting a personal password. The adapter leds visually indicates the status of valve driver and Bluetooth connection.

WARNING: for the list of countries where the Bluetooth adapter has been approved, see tech. table **GS500**
T option is not available for the Indian market, so the Bluetooth adapter must be ordered separately.

6 GENERAL CHARACTERISTICS

Assembly position	Any position
Subplate surface finishing to ISO 4401	Acceptable roughness index: Ra ≤ 0,8, recommended Ra 0,4 – Flatness ratio 0,01/100
MTTFd valves according to EN ISO 13849	75 years, for further details see technical table P007
Ambient temperature range	**Standard** = -20°C ÷ +60°C **/PE** option = -20°C ÷ +60°C
Storage temperature range	**Standard** = -20°C ÷ +70°C **/PE** option = -20°C ÷ +70°C
Surface protection	Zinc coating with black passivation (body), tin plating (driver housing)
Corrosion resistance	Salt spray test (EN ISO 9227) > 200 h
Vibration resistance	See technical table G004
Conformity	CE according to EMC directive 2014/30/EU (Immunity: EN 61000-6-2; Emission: EN 61000-6-3) RoHS Directive 2011/65/EU as last update by 2015/863/EU REACH Regulation (EC) n°1907/2006

7 HYDRAULIC CHARACTERISTICS - based on mineral oil ISO VG 46 at 50 °C

Valve model		DPZE-*-2		DPZE-*-4	DPZE-*-6
Pressure limits	[bar]	ports **P, A, B, X** = 350; **T** = 250 (10 for option /D); **Y** = 10;			
Spool type and size **(1)**	standard	**L3, S3, D3**	**L5, DL5, S5, D5**		**L5, S5, D5**
	regenerative		**D9, L9**	**D9**	
Nominal flow Δp P-T **(2)**	[l/min]				
	Δp= 10 bar	160	250	480	640
	Δp= 30 bar	270	430	830	1100
	Max permissible flow	400	550	1000	1600
Piloting pressure	[bar]	min. = 25; max = 350			
Piloting volume	[cm³]	3,7		9,0	21,6
Piloting flow **(3)**	[l/min]	3,7		6,8	14,4
Leakage **(4)**	Pilot [cm³]	100 / 300		200 / 500	900 / 2800
	Main stage [l/min]	0,2 / 0,6		0,3 / 1,0	1,0 / 3,0
Response time **(5)**	[ms]	≤ 75		≤ 90	≤ 120
Hysteresis		≤ 1 [% of max regulation]			
Repeatability		± 0,5 [% of max regulation]			
Thermal drift		zero point displacement < 1% at ΔT = 40°C			

(1) For spool type **D** and **DL** the flow value is referred to single path P-A (A-T) at Δp/2 per control edge. The flow P-B (B-T) is 50% of P-A (A-T)

(2) For different Δp, the max flow is in accordance to the diagrams in section 10.2

(3) With step reference input signal 0 ÷100 %

(4) At p = 100/350 bar

(5) 0-100% step signal see detailed diagrams in section 10.3

8 ELECTRICAL CHARACTERISTICS

Power supplies	Nominal : +24 VDC Rectified and filtered : VRMS = 20 ÷ 32 VMAX (ripple max 10 % VPP)	
Max power consumption	50 W	
Max. solenoid current	2,6 A	
Coil resistance R at 20°C	3,1 Ω	
Analog input signals **(1)**	Voltage: range ±10 VDC (24 VMAX tolerant) Input impedance: Ri > 50 kΩ Current: range ±20 mA Input impedance: Ri = 500 Ω	
Monitor outputs **(1)**	Output range: voltage ±10 VDC @ max 5 mA current ±20 mA @ max 500 Ω load resistance	
Alarms	Solenoid not connected/short circuit, cable break with current reference signal **(1)**, over/under temperature, valve spool transducer malfunctions, alarms history storage function	
Insulation class	H (180°) Due to the occurring surface temperatures of the solenoid coils, the European standards ISO 13732-1 and EN982 must be taken into account	
Protection degree to DIN EN60529	IP66 / IP67 with mating connectors	
Duty factor	Continuous rating (ED=100%)	
Additional characteristics	Short circuit protection of solenoid's current supply; spool position control by P.I.D. with rapid solenoid switching; protection against reverse polarity of power supply	
Communication interface	USB - Atos ASCII coding	CANopen - EN50325-4 + DS408
Communication physical layer	not insulated - USB 2.0 + USB OTG	optical insulated - CAN ISO11898
Recommended wiring cable	LiYCY shielded cables, see section 16	

(1) Available only for TID-NP

Note: a maximum time of 500 ms (depending on communication type) has to be considered between the driver energizing with the 24 VDC power supply and when the valve is ready to operate. During this time the current to the valve coils is switched to zero.

9 SEALS AND HYDRAULIC FLUIDS - for other fluids not included in below table, consult our technical office

Seals, recommended fluid temperature	NBR seals (standard) = -20°C ÷ +60°C, with HFC hydraulic fluids = -20°C ÷ +50°C FKM seals (/PE option) = -20°C ÷ +80°C		
Recommended viscosity	20÷100 mm²/s - max allowed range 15 ÷ 380 mm²/s		
Max fluid contamination level — normal operation	ISO4406 class 18/16/13 NAS1638 class 7		see also filter section at www.atos.com or KTF catalog
Max fluid contamination level — longer life	ISO4406 class 16/14/11 NAS1638 class 5		
Hydraulic fluid	**Suitable seals type**	**Classification**	**Ref. Standard**
Mineral oils	NBR, FKM	HL, HLP, HLPD, HVLP, HVLPD	DIN 51524
Flame resistant without water	FKM	HFDU, HFDR	ISO 12922
Flame resistant with water	NBR	HFC	

10 DIAGRAMS (based on mineral oil ISO VG 46 at 50 °C)

10.1 Regulation diagrams (values measure at p 10 bar P-T)

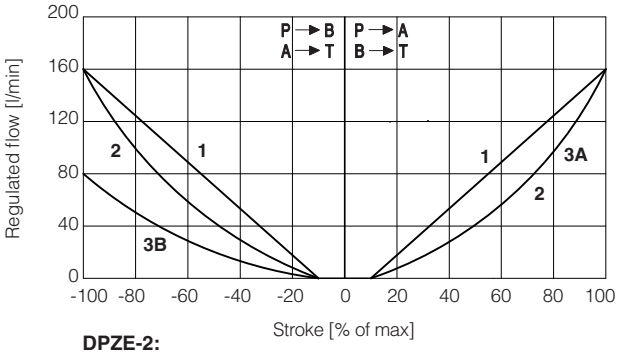

DPZE-2:
1 = L3 **3A** = D3 (P → A, A → T)
2 = S3 **3B** = D3 (P → B, B → T)

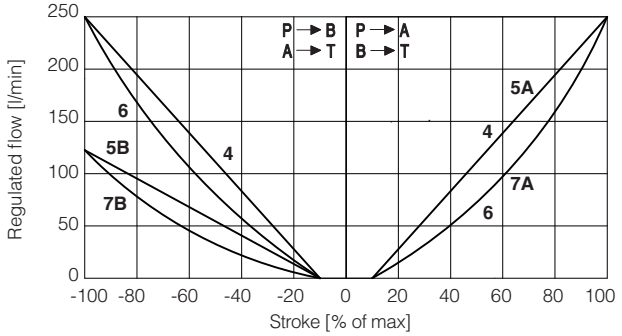

DPZE-2:
4 = L5 **5A** = DL5 (P → A, A → T) **7A** = D5 (P → A, A → T)
6 = S5 **5B** = DL5 (P → B, B → T) **7B** = D5 (P → B, B → T)

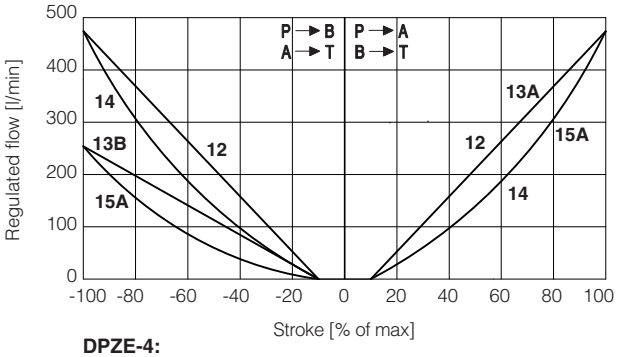

DPZE-4:
12=L5 **13A**=DL5 (P → A, A → T) **15A**=D5 (P → A, A → T)
14=S5 **13B**=DL5 (P → B, B → T) **15B**=D5 (P → B, B → T)

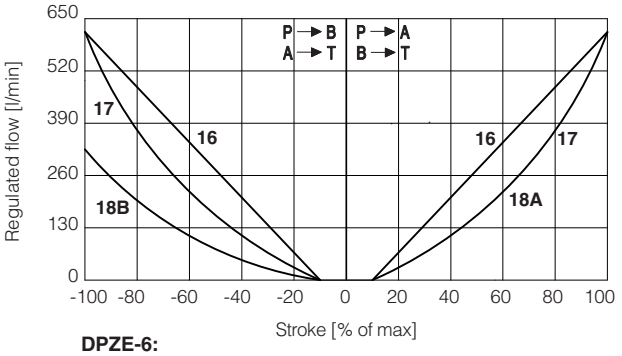

DPZE-6:
16 = L5 **18A** = D5 (P → A, A → T)
17 = S5 **18B** = D5 (P → B, B → T)

Note:
Hydraulic configuration vs. reference signal (standard and option /B)

TID-NP

Reference signal 0 ÷ +10 V / 12 ÷ 20 mA } P → A / B → T

Reference signal 0 ÷ -10 V / 12 ÷ 4 mA } P → B / A → T

TID-BC

Positive reference signal P → A / B → T

Negative reference signal P → B / A → T

19 = differential - regenerative spool **D9**
(not available for valve size 32)

D9 spool type with a fourth position specific to regenerative circuit, performed by means of an additional external check valve.

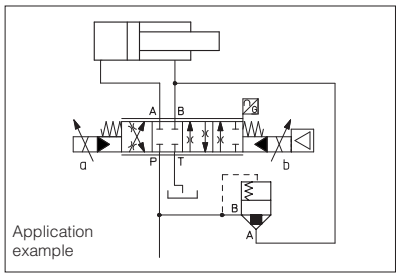

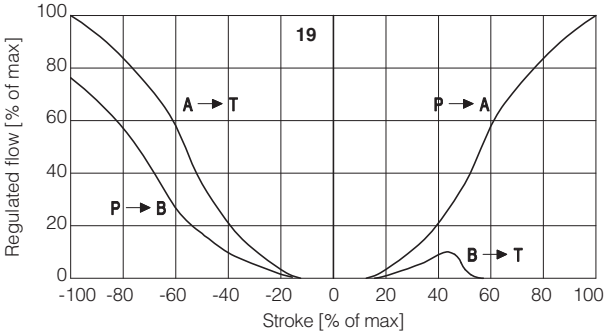

20 = linear - internal regenerative spool **L9**
(available only for valve size 16)

L9 spool type with a fourth position specific to perform a regenerative circuit internal to the valve.

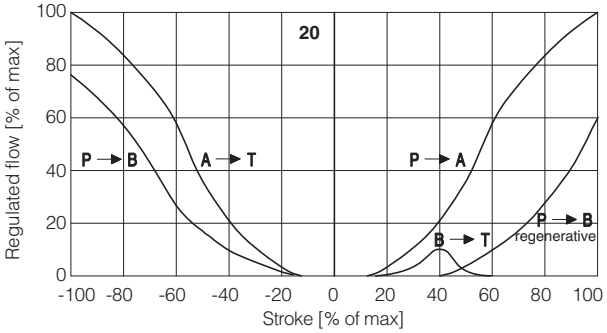

10.2 Operating diagrams

Flow /Δp diagram stated at 100% of spool stroke

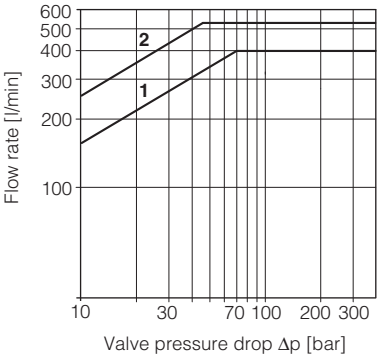

DPZE-2:
1 = spools L3, S3, D3
2 = spools L5, S5, D5, DL5, D9, L9

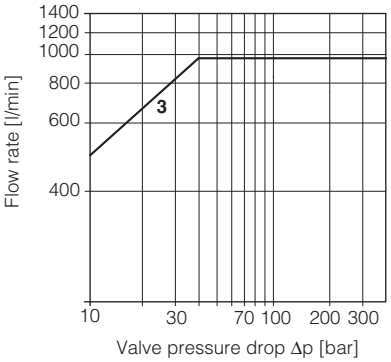

DPZE-4:
3 = spools L5, S5, D5, DL5, D9

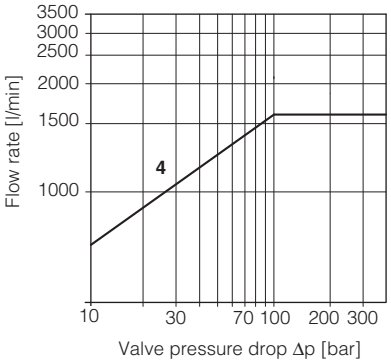

DPZE-6:
4 = L5, S5, D5

10.3 Response time

The response times in below diagrams are measured at different steps of the reference input signal. They have to be considered as average values.
For the valves with digital electronics the dynamics performances can be optimized by setting the internal software parameters.

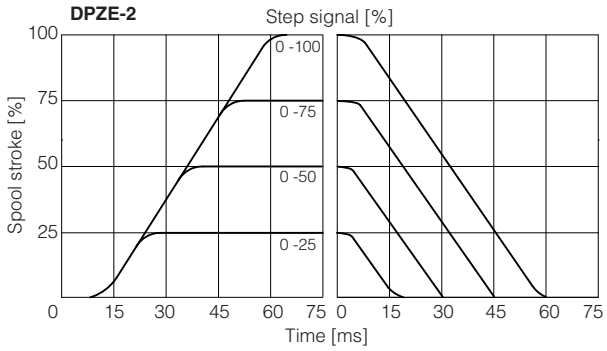

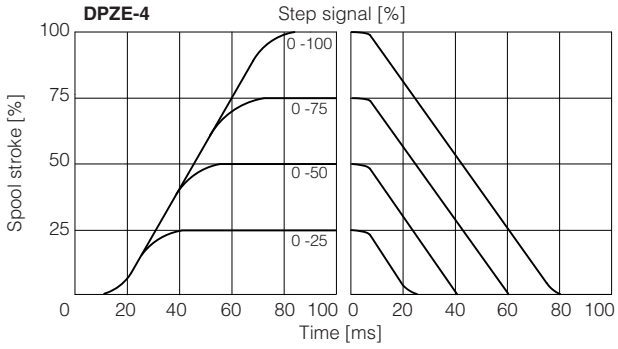

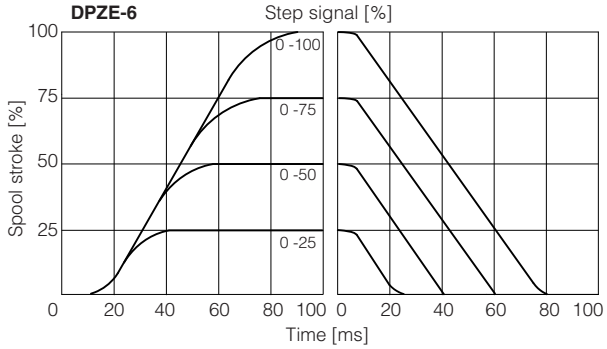

10.4 Configuration 72

Only for **DPZE** sizes **2** and **4** with spools **L5**, **S5** or **D5**: in central position the leakages P-A and P-B are drained to tank, avoiding the drift of cylinders with differential areas.

11 HYDRAULIC OPTIONS

B = Configurations 71, 73: on-board digital driver connectors and LVDT transducer at side of port A of the main stage (side B of pilot valve).
For hydraulic configuration vs reference signal, see 9.1

D = Internal drain.
Pilot and drain configuration can be modified as shown in section 17.
The valve's standard configuration provides internal pilot and external drain.

E = External pilot (through port X).
Pilot and drain configuration can be modified as shown in section 17.
The valve's standard configuration provides internal pilot and external drain.

① Pilot valve
② Main stage
③ Pressure reducing valve
④ Plug to be added for external pilot trough port X
⑤ Plug to be removed for internal drain through port T

Functional Scheme - example of configuration 71

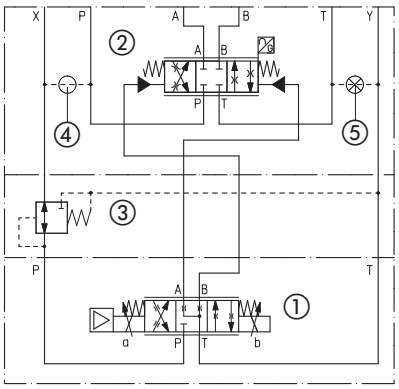

12 ELECTRONIC OPTIONS - only for TID-NP

I = This option provides 4 ÷ 20 mA current reference and monitor signals, instead of the standard ±10 VDC.
It is normally used in case of long distance between the machine control unit and the valve or where the reference signal can be affected by electrical noise; the valve functioning is disabled in case of reference signal cable breakage.

J = This option provides 4 ÷ 20 mA current reference and ±10 VDC voltage monitor signals.
The valve functioning is disabled in case of reference signal cable breakage.

13 POSSIBLE COMBINED OPTIONS

for **TID-NP**: /BD, /BE, /BI, /BJ, /BDE, /BDI, /BDJ, /BEI, /BEJ, /BDEI, /BDEJ, /DE, /DI, /DJ, /DEI, /DEJ, /EI, /EJ
for **TID-BC**: /BD, /BE, /DE, BDE,

Note: **/T** Bluetooth adapter option can be combined with all other options

14 POWER SUPPLY AND SIGNALS SPECIFICATIONS

14.1 Power supply (V+ and V0)

The power supply must be appropriately stabilized or rectified and filtered: apply at least a 10000 μF/40 V capacitance to single phase rectifiers or a 4700 μF/40 V capacitance to three phase rectifiers.

⚠ A safety fuse is required in series to the power supply: 2,5 A time lag fuse.

14.2 Flow reference input signal (Q_INPUT+) - only for **TID-NP**

The driver controls in closed loop the valve spool position proportionally to the external reference input signal.
Standard (voltage reference input): default is ±10 VDC and can be reconfigured via software, within a maximum range of ±10 VDC.
Options /I and /J (current reference input): default is 4 ÷ 20 mA and can be reconfigured via software, within a maximum range of ± 20 mA.

14.3 Flow monitor output signal (Q_MONITOR) - only for **TID-NP**

The driver generates an analog output signal proportional to the actual spool position of the valve; the monitor output signal can be software set to show other signals available in the driver.
Standard and option /J (voltage monitor output): default is ±10 VDC and can be reconfigured via software, within a maximum range of ±10 VDC.
Options /I and /J (current monitor output): default is 4 ÷ 20 mA and can be reconfigured via software, within a maximum range of ± 20 mA.

Note:
monitor output signal must not be directly used to activate safety functions, like to switch-ON/OFF the machine's safety components, as prescribed by the European standards (Safety requirements of fluid technology systems and components-hydraulics, ISO 4413).

15 ELECTRONIC CONNECTIONS

15.1 Main connector signals - 7 pin (A1) (A2)

PIN	TID-NP	TID-BC	TECHNICAL SPECIFICATIONS	NOTES
A	**V+**		Power supply 24 VDC	Input - power supply
B	**V0**		Power supply 0 VDC	Gnd - power supply
C	**AGND**	**(1)**	Analog ground	Gnd - analog signal
D	**Q_INPUT+**	**(1)**	Flow reference input signal: ±10 VDC for standard, 4 ÷ 20 mA for /I and /J options	Input - analog signal
E	**INPUT-**	**(1)**	Negative reference input signal for Q_INPUT+	Input - analog signal
F	**Q_MONITOR**	**(1)**	Flow monitor output signal: ±10 VDC for standard and /J option, 4 ÷ 20 mA for /I option, referred to AGND	Output - analog signal
G	**EARTH**		Internally connected to driver housing	

(1) Do not connect for TID-BC

15.2 USB connector - M12 5 pin (B) - only for **TID-NP**

PIN	SIGNAL	TECHNICAL SPECIFICATION (1)
1	**+5V_USB**	Power supply
2	**ID**	Identification
3	**GND_USB**	Signal zero data line
4	**D-**	Data line -
5	**D+**	Data line +

(1) Shield connection on connector housing is recommended

15.3 CANopen connector - M12 - 5 pin (C) - only for **TID-BC**

PIN	SIGNAL	TECHNICAL SPECIFICATION (1)
1	**CAN_SHLD**	Shield
2	**not used**	-
3	**CAN_GND**	Signal zero data line
4	**CAN_H**	Bus line (high)
5	**CAN_L**	Bus line (low)

(1) Shield connection on connector housing is recommended

15.4 Connections layout

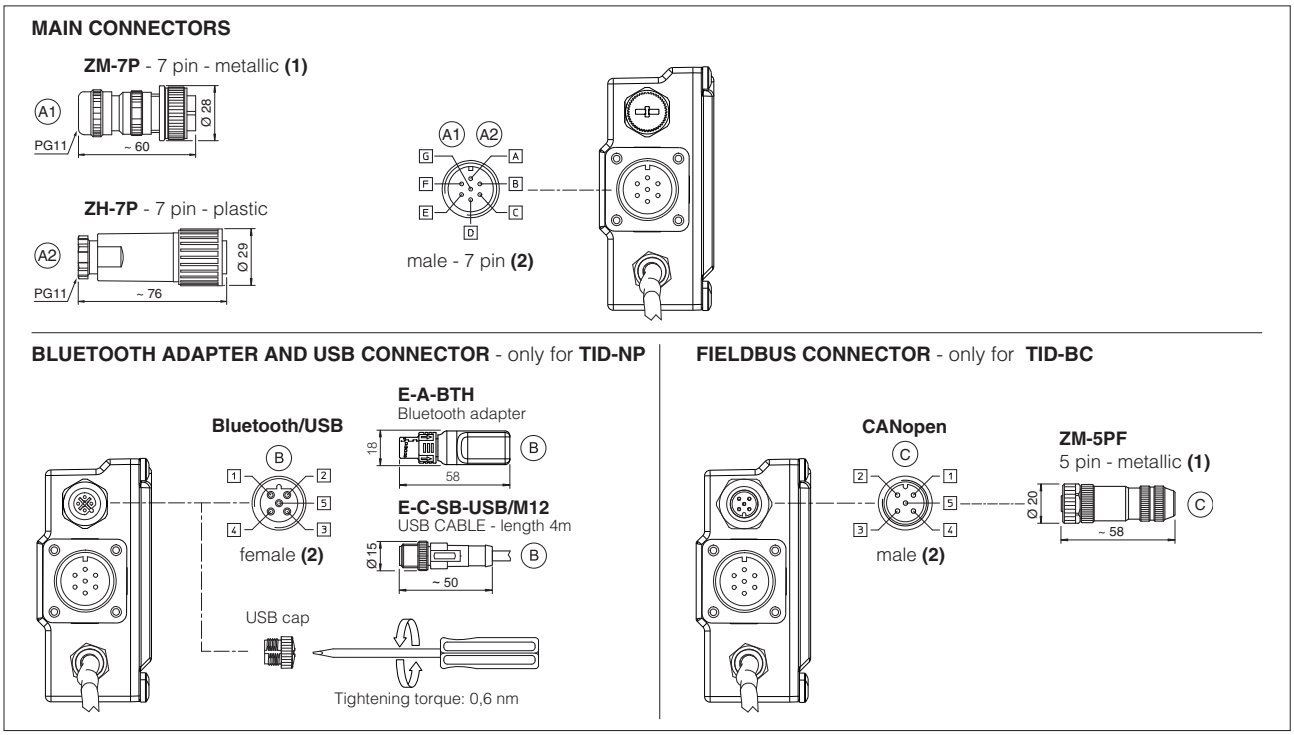

(1) use of metallic connectors is strongly recommended in order to fulfill EMC requirements **(2)** pin layout always referred to driver's view

16 CONNECTORS CHARACTERISTICS - to be ordered separately

16.1 Main connectors - 7 pin

CONNECTOR TYPE	POWER SUPPLY	POWER SUPPLY
CODE	(A1) ZM-7P	(A2) ZH-7P
Type	7pin female straight circular	7pin female straight circular
Standard	According to MIL-C-5015	According to MIL-C-5015
Material	Metallic	Plastic reinforced with fiber glass
Cable gland	PG11	PG11
Recommended cable	LiYCY 7 x 0,75 mm² max 20 m (logic and power supply) or LiYCY 7 x 1 mm² max 40 m (logic and power supply)	LiYCY 7 x 0,75 mm² max 20 m (logic and power supply) or LiYCY 7 x 1 mm² max 40 m (logic and power supply)
Conductor size	up to 1 mm² - available for 7 wires	up to 1 mm² - available for 7 wires
Connection type	to solder	to solder
Protection (EN 60529)	IP 67	IP 67

16.2 Fieldbus communication connector - only for TID-BC

CONNECTOR TYPE	CANopen
CODE	(C) ZM-5PF
Type	5 pin female straight circular
Standard	M12 coding A – IEC 61076-2-101
Material	Metallic
Cable gland	Pressure nut - cable diameter 6÷8 mm
Cable	CANbus Standard (DR 303-1)
Connection type	screw terminal
Protection (EN 60529)	IP67

17 PLUGS LOCATION FOR PILOT/DRAIN CHANNELS

Depending on the position of internal plugs, different pilot/drain configurations can be obtained as shown below.
To modify the pilot/drain configuration, proper plugs must only be interchanged. The plugs have to be sealed using loctite 270.
Standard valves configuration provides internal pilot and external drain

DPZE-2 **Pilot channels** **Drain channels**

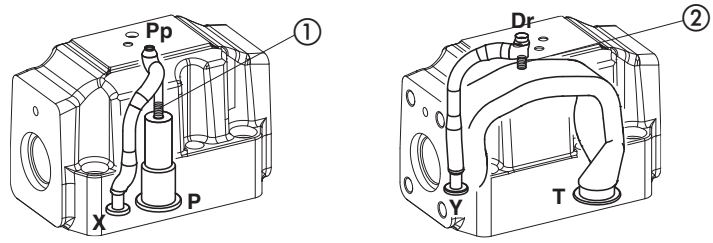

Internal piloting: Without blinded plug SP-X300F ①;
External piloting: Add blinded plug SP-X300F ①;
Internal drain: Without blinded plug SP-X300F ②;
External drain: Add blinded plug SP-X300F ②.

DPZE-4 **Pilot channels** **Drain channels**

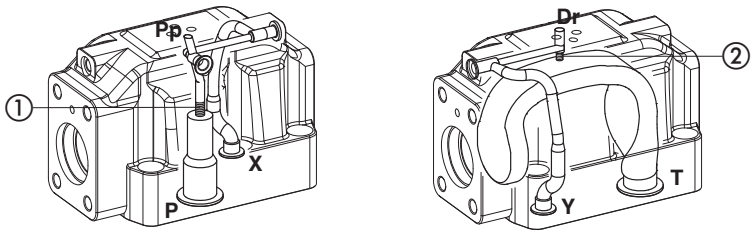

Internal piloting: Without blinded plug SP-X500F ①;
External piloting: Add blinded plug SP-X500F ①;
Internal drain: Without blinded plug SP-X300F ②;
External drain: Add blinded plug SP-X300F ②.

DPZE-6 **Pilot channels** **Drain channels**

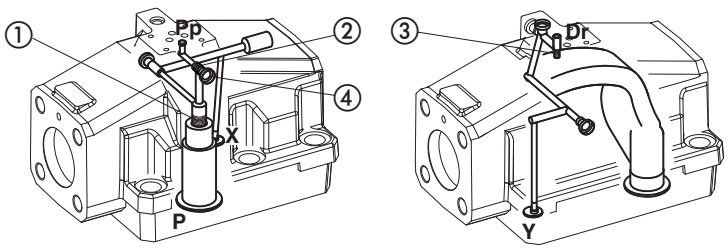

Internal piloting: Without plug ①;
External piloting: Add DIN-908 M16x1,5 in pos ①;
Internal drain: Without blinded plug SP-X300F ③;
External drain: Add blinded plug SP-X300F ③.

DPZE-TID-*-2

ISO 4401: 2005
Mounting surface: 4401-07-07-0-05
(see table P005)

DPZE-*-2	Mass [kg]
all versions	14,8

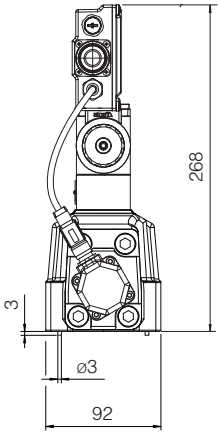

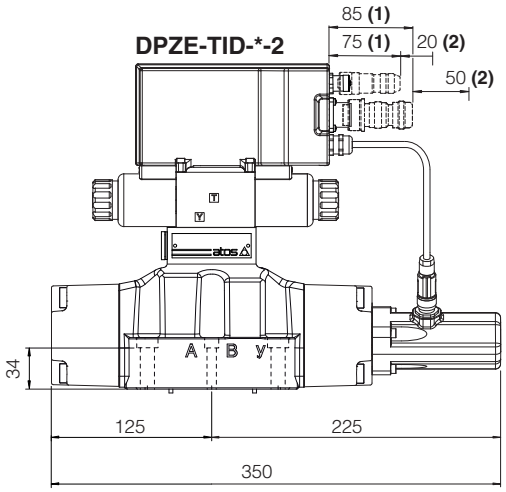

(1) The indicated dimension refers to the longer connectors or Bluetooth adapter
For dimensions of connectors and Bluetooth adapter, see section 15.4
(2) Space required for connection cable and for connector removal

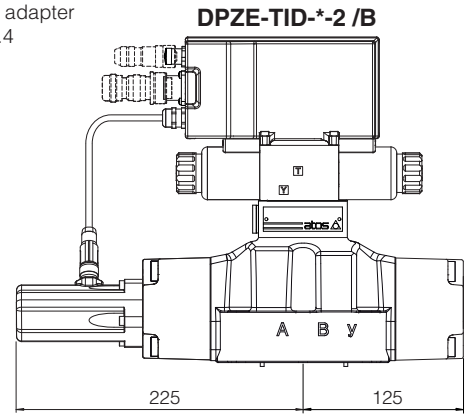

DPZE-TID-*-4

ISO 4401: 2005
Mounting surface: 4401-08-08-0-05
(see table P005)

DPZE-*-4	Mass [kg]
all versions	19,3

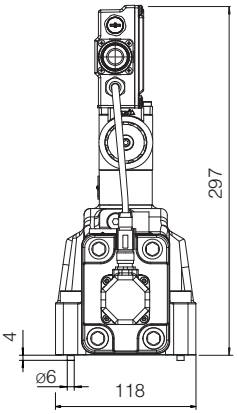

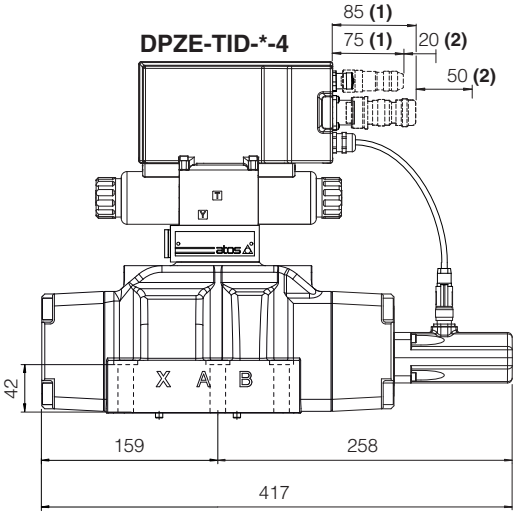

(1) The indicated dimension refers to the longer connectors or Bluetooth adapter
For dimensions of connectors and Bluetooth adapter, see section 15.4
(2) Space required for connection cable and for connector removal

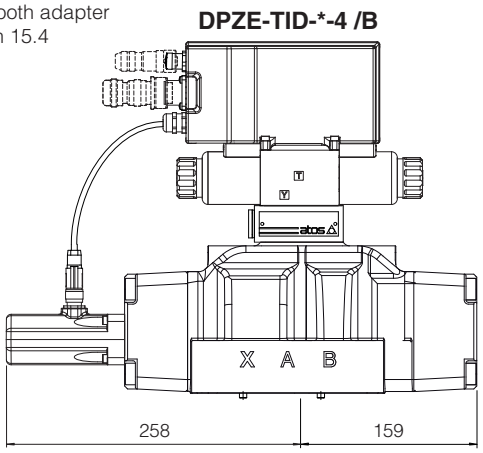

DPZE-TID-*-6

ISO 4401: 2005
Mounting surface: 4401-10-09-0-05
(see table P005)

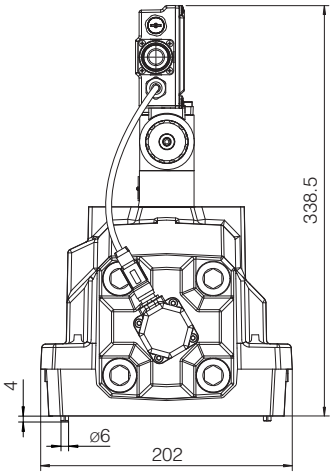

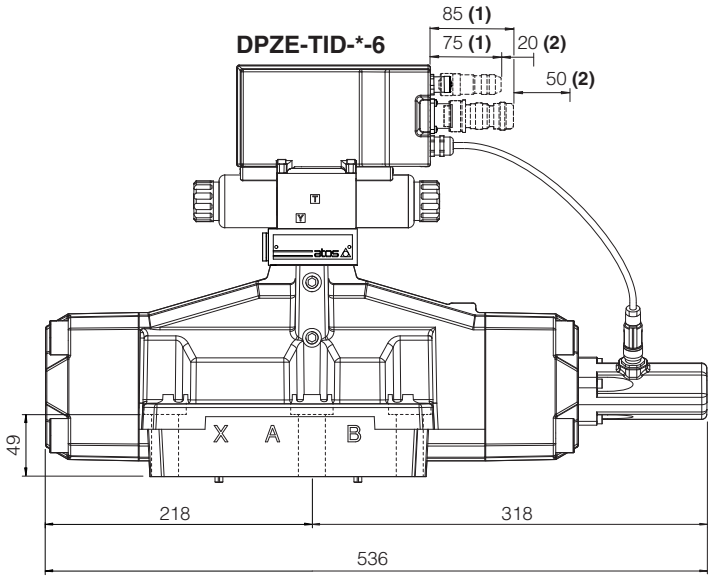

DPZE-*-6	Mass [kg]
all versions	43,3

(1) The indicated dimension refers to the longer connectors or Bluetooth adapter
For dimensions of connectors and Bluetooth adapter, see section 15.4
(2) Space required for connection cable and for connector removal

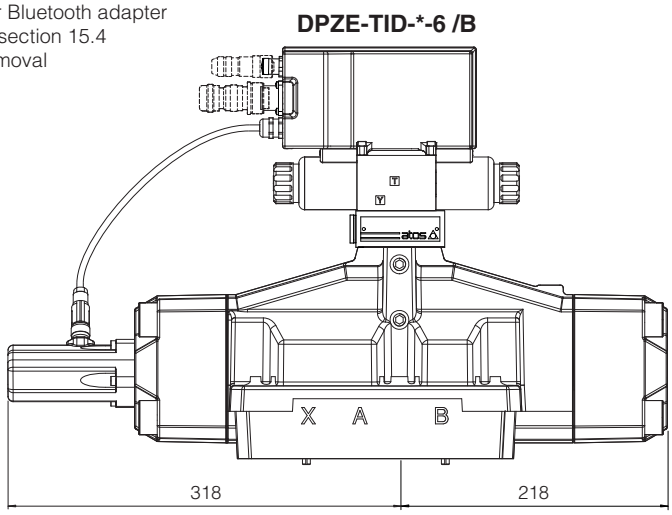

19 FASTENING BOLTS AND SEALS

Type	Size	Fastening bolts	Seals
DPZE	**2** = 16	4 socket head screws M10x50 class 12.9 Tightening torque = 70 Nm 2 socket head screws M6x45 class 12.9 Tightening torque = 15 Nm	4 OR 130; Diameter of ports A, B, P, T: Ø 20 mm (max) 2 OR 2043 Diameter of ports X, Y: Ø = 7 mm (max)
	4 = 25	6 socket head screws M12x60 class 12.9 Tightening torque = 125 Nm	4 OR 4112; Diameter of ports A, B, P, T: Ø 24 mm (max) 2 OR 3056 Diameter of ports X, Y: Ø = 7 mm (max)
	6 = 32	6 socket head screws M20x80 class 12.9 Tightening torque = 600 Nm	4 OR 144; Diameter of ports A, B, P, T: Ø 34 mm (max) 2 OR 3056 Diameter of ports X, Y: Ø = 7 mm (max)

20 RELATED DOCUMENTATION

FS001	Basics for digital electrohydraulics	**K800**	Electric and electronic connectors
FS900	Operating and maintenance information for proportional valves	**P005**	Mounting surfaces for electrohydraulic valves
GS500	Programming tools	**QD320**	Quickstart for TID valves commissioning
GS510	Fieldbus	**E-MAN-RI-TID**	TID user manual

Proportional directional valves

piloted, with LVDT transducer and positive spool overlap

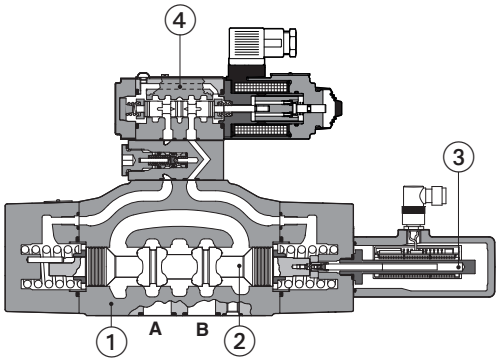

DPZO-T-251

① Valve body
② Main stage Spool
③ Main stage LVDT transducer
④ Pilot valve

DPZO-T

Proportional directional valves, piloted, with LVDT position transducer (main stage) and positive spool overlap for directional controls and not compensated flow regulations.

The valves operate in association with digital off-board divers, see section 3.

With de-energized proportional solenoids, mechanical central position of the spool is performed by centering springs.

Spools regulation characteristics:
L = linear
S = progressive for fine low flow control
D and DL = differential-progressive, for control of actuators with area ratio 1:2
D9 and L9 = for regenerative circuit

Size: **10** ÷ **32** - ISO 4401
Max flow: **180** ÷ **1600 l/min**
Max pressure: **350 bar**

1 MODEL CODE OF STANDARD SPOOLS

DPZO - **T** - **2** **71** - **L** **5** / ***** ***** / *****

Proportional directional valve, piloted

T = with LVDT transducer

Valve size ISO 4401:
1 = 10 **2** = 16 **4** = 25 **6** = 32

Configuration:

	Standard	Option **/B**
51 =	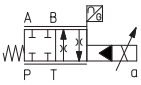	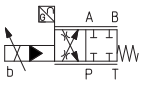
53 =	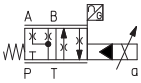	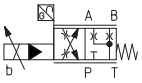
71 =	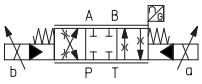	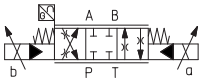
72 = (1)	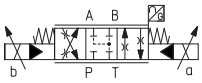	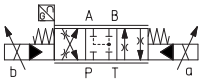
73 =	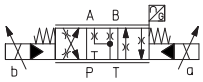	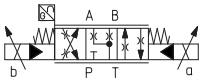

(1) Only for DPZO sizes 2 and 4 with spools L5, S5 or D5: in central position the leakages P-A and P-B are drained to tank, avoiding the drift of cylinders with differential areas

Series number

Seals material, see section 7 :
- = NBR
PE = FKM
BT = HNBR

Hydraulic options (3):
B = solenoid and LVDT transducer at side of port A of the main stage (side B of pilot valve)
D = internal drain
E = external pilot pressure

Spool size:	**3**	**5**	**5**	**5**
Spool type:	L, S, D	L, DL, S, D	L, S, D	L, S, D
Configuration:	51,53,71,73	51,53,71,73	51,53,71,73	72
DPZO-1 =	-	100	-	-
DPZO-2 =	160	250	-	250
DPZO-4 =	-	480	-	480
DPZO-6 =	-	-	640	-
Nominal flow (l/min) at Δp 10 bar P-T				

Spool type, regulating characteristics **(2)**:

L
linear

DL
differential-linear
P-A = Q, B-T = Q/2
P-B = Q/2, A-T = Q

S
progressive

D
differential-progressive
P-A = Q, B-T = Q/2
P-B = Q/2, A-T = Q

(2) Spools for regenerative circuit, see section 2
(3) All combination possible

2 MODEL CODE OF SPOOLS FOR REGENERATIVE CIRCUIT - for valve model code and options, see section 1

DPZO	-	T	-	2	71 - L9	/	*	*	/	*

Configuration and spool:

71-D9

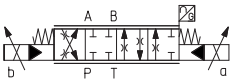

71-L9

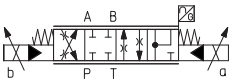

73-D9

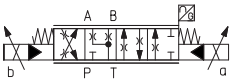

73-L9

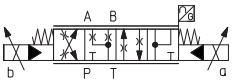

Spool size:		**D9**	**L9**
DPZO-1	=	100	-
DPZO-2	=	250	250
DPZO-4	=	480	-

Nominal flow (l/min) at Δp 10bar P-T

D9

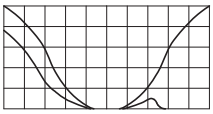

For regenerative circuit (additional external check valve required)

see 11.1 - diagram 19

L9

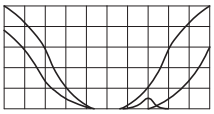

For regenerative circuit internal to the valve

see 11.1 - diagram 20

3 OFF-BOARD ELECTRONIC DRIVERS

Please include in the driver order also the complete code of the connected proportional valve.

Drivers model	E-BM-TEB	E-BM-TES
Type	digital	digital
Format	DIN-rail panel	DIN-rail panel
Tech table	GS230	GS240

4 GENERAL CHARACTERISTICS

Assembly position	Any position
Subplate surface finishing to ISO 4401	Acceptable roughness index: Ra ≤ 0,8, recommended Ra 0,4 – Flatness ratio 0,01/100
MTTFd valves according to EN ISO 13849	75 years, for futher details see technical table P007
Ambient temperature range	**Standard** = -20°C ÷ +60°C **/PE** option = -20°C ÷ +60°C **/BT** option = -40°C ÷ +60°C
Storage temperature range	**Standard** = -20°C ÷ +70°C **/PE** option = -20°C ÷ +70°C **/BT** option = -40°C ÷ +70°C
Surface protection	Zinc coating with black passivation
Corrosion resistance	Salt spray test (EN ISO 9227) > 200 h
Vibration resistance	See technical table G004
Compliance	CE according to EMC directive 2014/30/EU (Immunity: EN 61000-6-2; Emission: EN 61000-6-3) RoHS Directive 2011/65/EU as last update by 2015/863/EU REACH Regulation (EC) n°1907/2006

5 HYDRAULIC CHARACTERISTICS - based on mineral oil ISO VG 46 at 50 °C

Valve model		**DPZO-T-1**	**DPZO-T-2**		**DPZO-T-4**	**DPZO-T-6**
Pressure limits	[bar]	ports **P, A, B, X** = 350; **T** = 250 (10 for option /D); **Y** = 10;				
Spool type	standard	**L5, DL5, S5, D5**	**L3, S3, D3**	**L5, DL5, S5, D5**		**L5, S5, D5**
	regenerative	**D9**		**D9, L9**	**D9**	
Nominal flow Δp P-T **(1)**	[l/min]					
	Δp= 10 bar	100	160	250	480	640
	Δp= 30 bar	160	270	430	830	1100
	Max permissible flow	180	400	550	1000	1600
Piloting pressure	[bar]	min. = 25; max = 350				
Piloting volume	[cm³]	1,4	3,7		9,0	21,6
Piloting flow **(2)**	[l/min]	1,7	3,7		6,8	14,4
Leakage **(3)**	Pilot [cm³]	100 / 300	100 / 300		200 / 500	900 / 2800
	Main stage [l/min]	0,15 / 0,5	0,2 / 0,6		0,3 / 1,0	1,0 / 3,0
Response time **(4)**	[ms]	≤ 60	≤ 75		≤ 90	≤ 120
Hysteresis		≤ 1 [% of max regulation]				
Repeatability		± 0,5 [% of max regulation]				
Thermal drift		zero point displacement < 1% at ΔT = 40°C				

(1) For different Δp, the max flow is in accordance to the diagrams in section 8.2
(2) With step reference input signal 0 ÷100 %
(3) At p = 100/350 bar
(4) 0-100% step signal see detailed diagrams in section 8.3

6 ELECTRICAL CHARACTERISTICS

Max power consumption	30 W
Max. solenoid current	2,6 A
Coil resistance R at 20°C	3 ÷ 3,3 Ω
Insulation class	H (180°) Due to the occuring surface temperatures of the solenoid coils, the European standards ISO 13732-1 and EN982 must be taken into account
Protection degree to DIN EN60529	IP65 with mating connectors
Duty factor	Continuous rating (ED=100%)

7 SEALS AND HYDRAULIC FLUIDS - for other fluids not included in below table, consult our technical office

Seals, recommended fluid temperature		NBR seals (standard) = -20°C ÷ +80°C, with HFC hydraulic fluids = -20°C ÷ +50°C FKM seals (/PE option) = -20°C ÷ +80°C HNBR seals (/BT option) = -40°C ÷ +60°C, with HFC hydraulic fluids = -40°C ÷ +50°C		
Recommended viscosity		20÷100 mm²/s - max allowed range 15 ÷ 380 mm²/s		
Max fluid contamination level	normal operation	ISO4406 class 18/16/13 NAS1638 class 7		see also filter section at www.atos.com or KTF catalog
	longer life	ISO4406 class 16/14/11 NAS1638 class 5		
Hydraulic fluid		**Suitable seals type**	**Classification**	**Ref. Standard**
Mineral oils		NBR, FKM, HNBR	HL, HLP, HLPD, HVLP, HVLPD	DIN 51524
Flame resistant without water		FKM	HFDU, HFDR	ISO 12922
Flame resistant with water		NBR, HNBR	HFC	

8 DIAGRAMS (based on mineral oil ISO VG 46 at 50 °C)

8.1 Regulation diagrams (values measure at p 10 bar P-T)

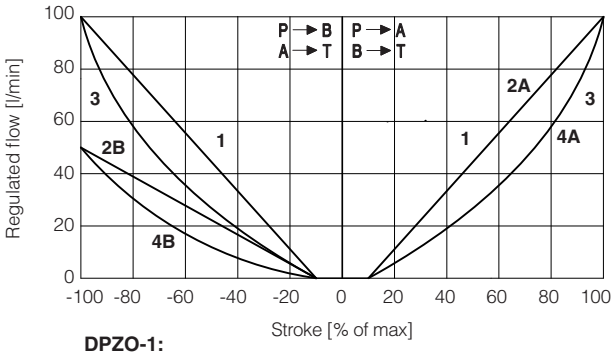

DPZO-1:
1 = L5 **2A** = DL5 (P → A, A → T) **4A** = D5 (P → A, A → T)
3 = S5 **2B** = DL5 (P → B, B → T) **4B** = D5 (P → B, B → T)

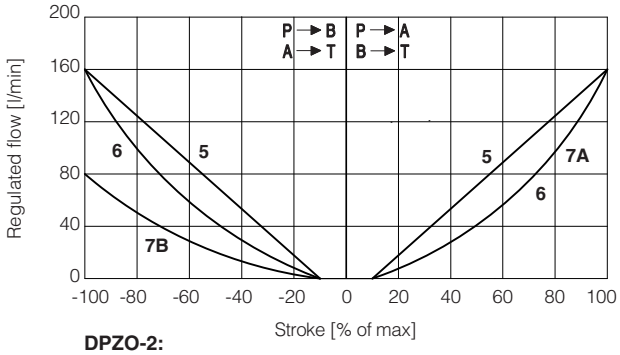

DPZO-2:
5 = L3 **7A** = D3 (P → A, A → T)
6 = S3 **7B** = D3 (P → B, B → T)

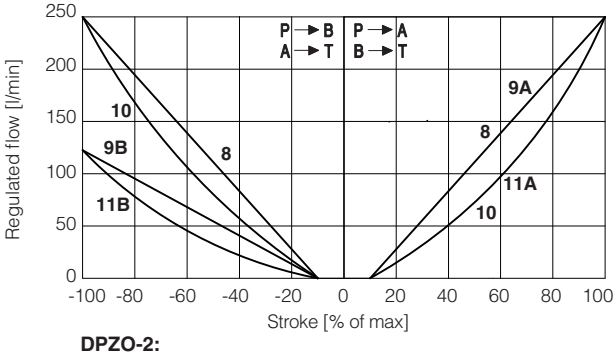

DPZO-2:
8 = L5 **9A** = DL5 (P → A, A → T) **11A** = D5 (P → A, A → T)
10 = S5 **9B** = DL5 (P → B, B → T) **11B** = D5 (P → B, B → T)

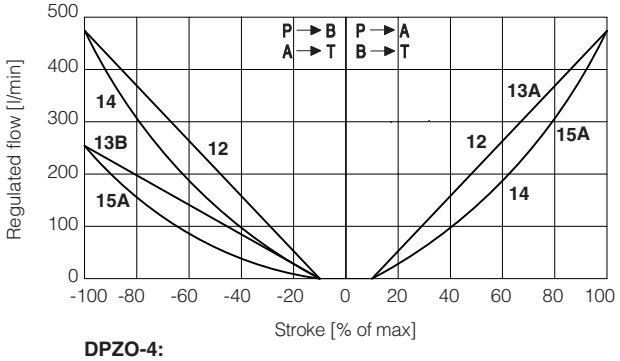

DPZO-4:
12=L5 **13A**=DL5 (P → A, A → T) **15A**=D5 (P → A, A → T)
14=S5 **13B**=DL5 (P → B, B → T) **15B**=D5 (P → B, B → T)

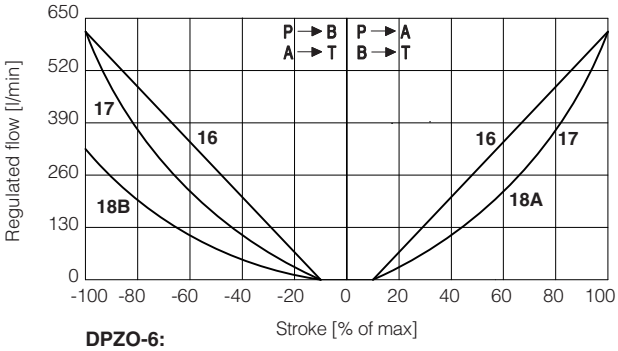

DPZO-6:
16 = L5 **18A** = D5 (P → A, A → T)
17 = S5 **18B** = D5 (P → B, B → T)

Note:
Hydraulic configuration vs. reference signal (standard and option /B)

Reference signal 0 ÷ +10 V / 12 ÷ 20 mA } P → A / B → T

Reference signal 0 ÷ -10 V / 12 ÷ 4 mA } P → B / A → T

19 = differential - regenerative spool **D9**
(not available for valve size 32)

D9 spool type with a fourth position specific to regenerative circuit, performed by means of an additional external check valve.

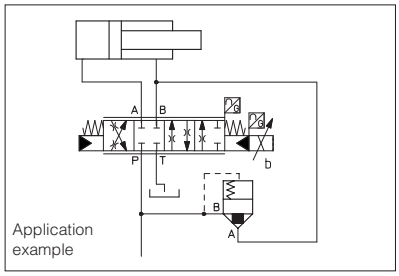

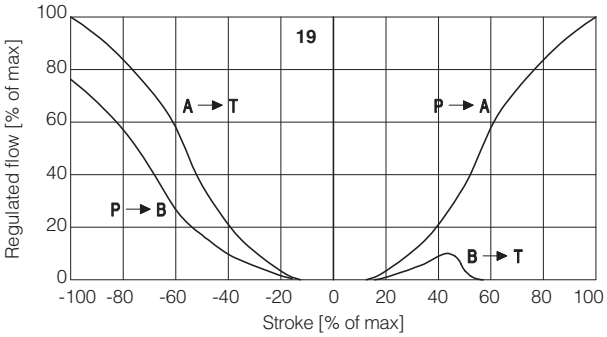

20 = linear - internal regenerative spool **L9**
(available only for valve size 16)

L9 spool type with a fourth position specific to perform a regenerative circuit internal to the valve.

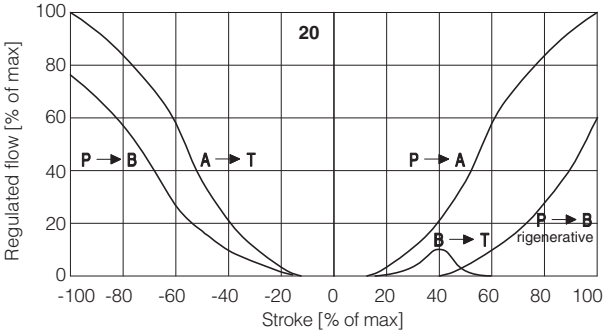

8.2 Operating diagrams

Flow /Δp diagram stated at 100% of spool stroke

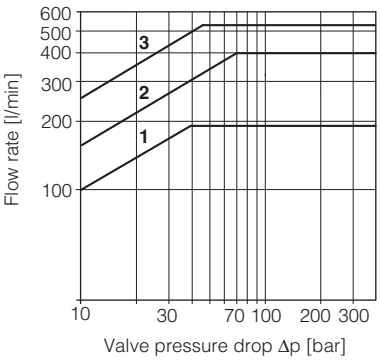

DPZO-1:
1 = spools L5, S5, D5, DL5, D9
DPZO-2:
2 = spools L3, S3, D3
3 = spools L5, S5, D5, DL5, D9, L9

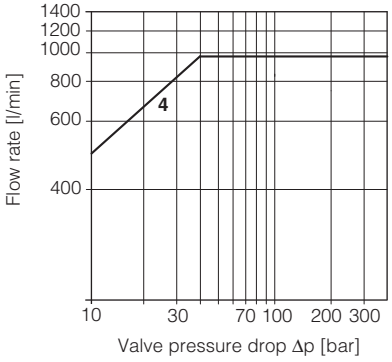

DPZO-4:
4 = spools L5, S5, D5, DL5, D9

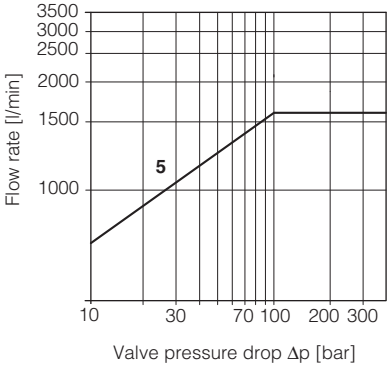

DPZO-6:
6 = L5, S5, D5

8.3 Response time

The response times in below diagrams are measured at different steps of the reference input signal. They have to be considered as average values.
For the valves with digital electronics the dynamics performances can be optimized by setting the internal software parameters.

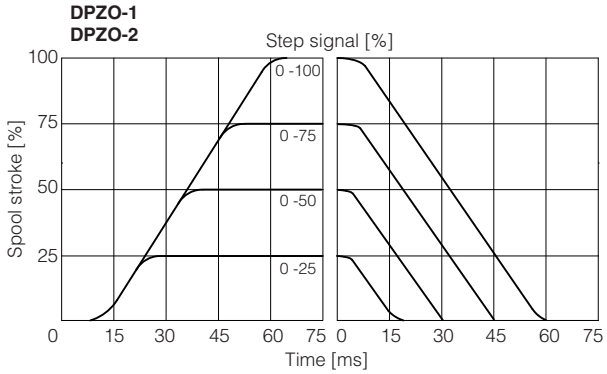

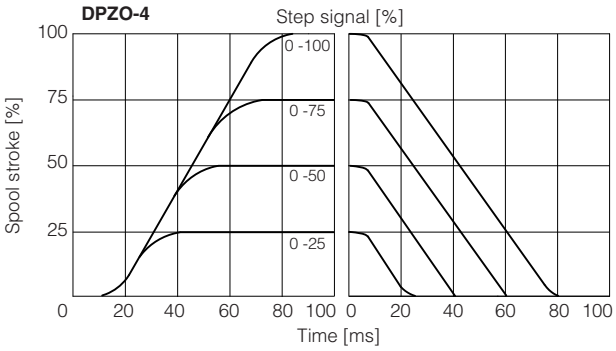

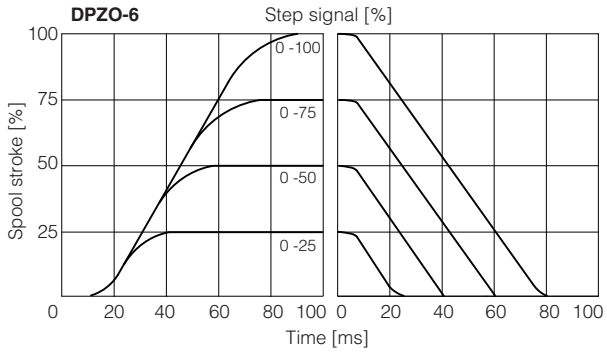

8.4 Operation as throttle valve

Single solenoid valves (*51) can be used as simple throttle valves:
Pmax = 250 bar

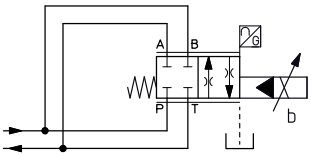

DPZO-*-	151-L5	251-L5	451-L5	651-L5
Max flow [l/min] Δp = 15 bar	320	860	1600	2200

9 HYDRAULIC OPTIONS

B = Solenoid and LVDT transducer at side of port A of the main stage (side B of pilot valve). For hydraulic configuration vs reference signal, see 8.1

D = Internal drain (through port T).
Pilot and drain configuration can be modified as shown in the functional scheme here aside. For detailed view of plugs position, see section 11
The valve's standard configuration provides internal pilot and external drain.

E = External pilot (through port X).
Pilot and drain configuration can be modified as shown in the functional scheme here aside. For detailed view of plugs position, see section 11
The valve's standard configuration provides internal pilot and external drain.

Functional Scheme - example of configuration 71

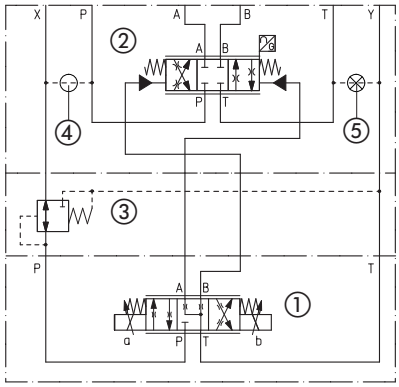

① Pilot valve ② Main stage
③ Pressure reducing valve
④ Plug to be added for external pilot trough port X
⑤ Plug to be removed for internal drain through port T

10 ELECTRICAL CONNECTION - connectors supplied with the valve

10.1 Pilot valve solenoid connector

PIN	SIGNAL	TECHNICAL SPECIFICATION	Connector code 666
1	**COIL**	Power supply	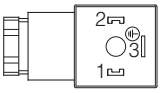
2	**COIL**	Power supply	
3	**GND**	Ground	

10.2 LVDT main stage transducer connector

PIN	SIGNAL	TECHNICAL SPECIFICATION	Connector code ZBE-08
1	**PROG**	Do not connect	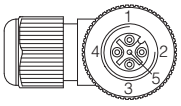
2	**VT+**	Power supply +15VDC	
3	**AGND**	Ground	
4	**TR**	Output signal	
5	**VT-**	Power supply -15VDC	

11 PLUGS LOCATION FOR PILOT/DRAIN CHANNELS

Depending on the position of internal plugs, different pilot/drain configurations can be obtained as shown below.
To modify the pilot/drain configuration, proper plugs must only be interchanged. The plugs have to be sealed using loctite 270.
Standard valves configuration provides internal pilot and external drain

DPZO-1 **Pilot channels** **Drain channels**

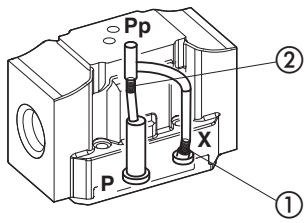

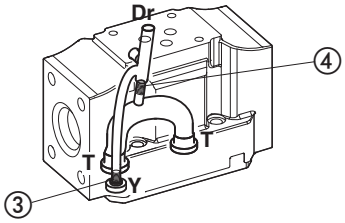

Internal piloting: blinded plug SP-X300F ① in X;
External piloting: blinded plug SP-X300F ② in Pp;
Internal drain: blinded plug SP-X300F ③ in Y;
External drain: blinded plug SP-X300F ④ in Dr.

DPZO-2 **Pilot channels** **Drain channels**

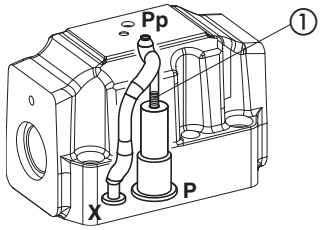

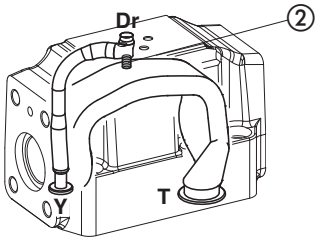

Internal piloting: Without blinded plug SP-X300F ①;
External piloting: Add blinded plug SP-X300F ①;
Internal drain: Without blinded plug SP-X300F ②;
External drain: Add blinded plug SP-X300F ②.

DPZO-4 **Pilot channels** **Drain channels**

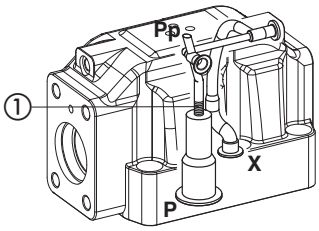

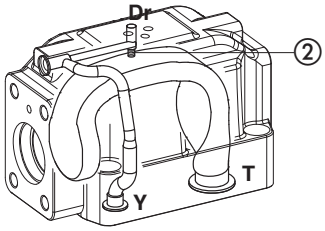

Internal piloting: Without blinded plug SP-X500F ①;
External piloting: Add blinded plug SP-X500F ①;
Internal drain: Without blinded plug SP-X300F ②;
External drain: Add blinded plug SP-X300F ②.

DPZO-6 **Pilot channels** **Drain channels**

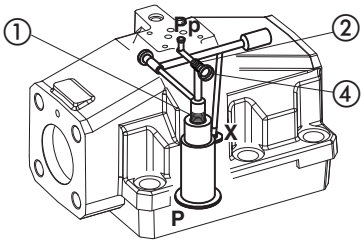

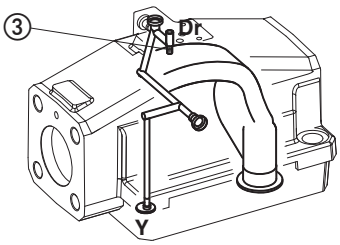

Internal piloting: Without plug ①;
External piloting: Add DIN-908 M16x1,5 in pos ①;
Internal drain: Without blinded plug SP-X300F ③;
External drain: Add blinded plug SP-X300F ③.

12 FASTENING BOLTS AND SEALS

Type	Size	Fastening bolts	Seals
DPZO	**1** = 10	4 socket head screws M6x40 class 12.9 Tightening torque = 15 Nm	5 OR 2050 Diameter of ports A, B, P, T: Ø 11 mm (max) 2 OR 108 Diameter of ports X, Y: Ø = 5 mm (max)
	2 = 16	4 socket head screws M10x50 class 12.9 Tightening torque = 70 Nm 2 socket head screws M6x45 class 12.9 Tightening torque = 15 Nm	4 OR 130; Diameter of ports A, B, P, T: Ø 20 mm (max) 2 OR 2043 Diameter of ports X, Y: Ø = 7 mm (max)
	4 = 25	6 socket head screws M12x60 class 12.9 Tightening torque = 125 Nm	4 OR 4112 Diameter of ports A, B, P, T: Ø 24 mm (max) 2 OR 3056 Diameter of ports X, Y: Ø = 7 mm (max)
	6 = 32	6 socket head screws M20x80 class 12.9 Tightening torque = 600 Nm	4 OR 144 Diameter of ports A, B, P, T: Ø 34 mm (max) 2 OR 3056 Diameter of ports X, Y: Ø = 7 mm (max)

DPZO-T-1 (dotted line = double solenoid version)

ISO 4401: 2005
Mounting surface: 4401-05-05-0-05 (see table P005)

Mass [kg]	
DPZO-T-15	8,5
DPZO-T-17	9,4

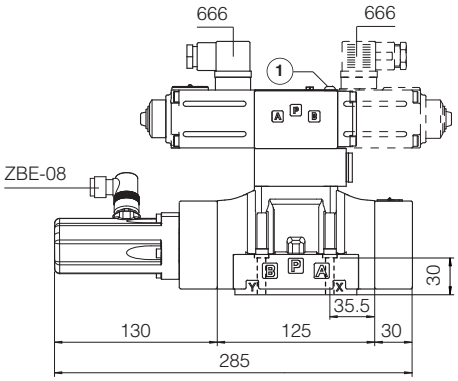

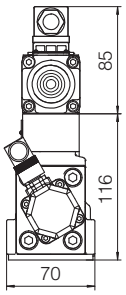

1 = Air bleeding 3

DPZO-T-2 (dotted line = double solenoid version)

ISO 4401: 2005
Mounting surface: 4401-07-07-0-05 (see table P005)

Mass [kg]	
DPZO-T-25	13,5
DPZO-T-27	14,4

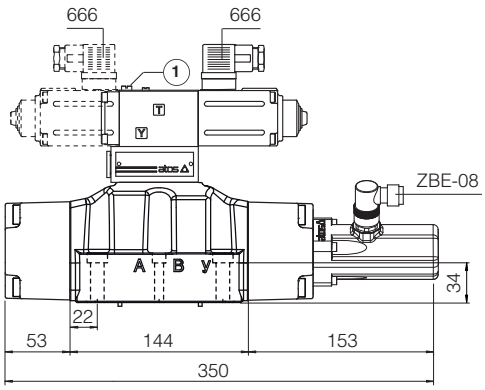

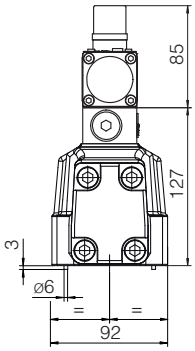

1 = Air bleeding 3

Notes: For option /B the proportional solenoid and the LVDT transducer are at side of port A of the main stage

DPZO-T-4 (dotted line = double solenoid version)

ISO 4401: 2005
Mounting surface: 4401-08-08-0-05 (see table P005)

Mass [kg]	
DPZO-T-45	17,6
DPZO-T-47	18,5

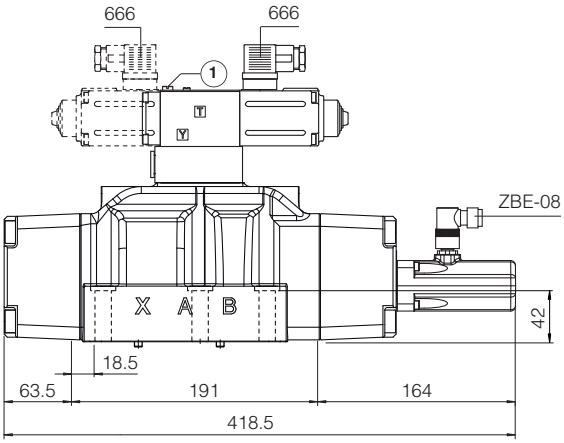

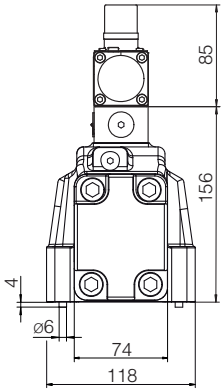

1 = Air bleeding 3

DPZO-T-6 (dotted line = double solenoid version)

ISO 4401: 2005
Mounting surface: 4401-10-09-0-05 (see table P005)

Mass [kg]	
DPZO-T-65	42,3
DPZO-T-67	43,1

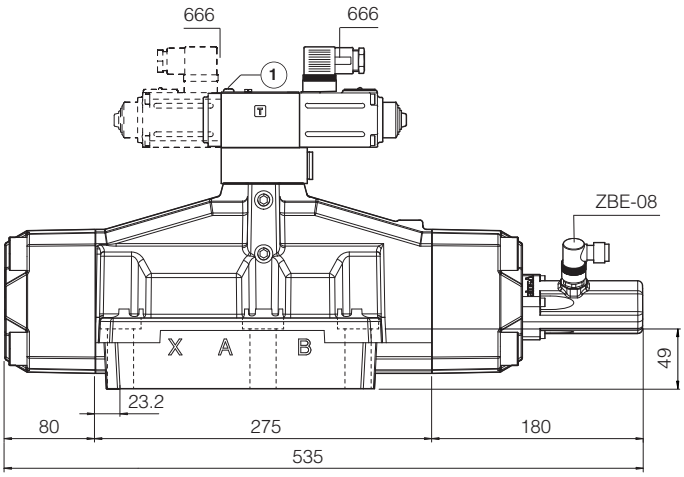

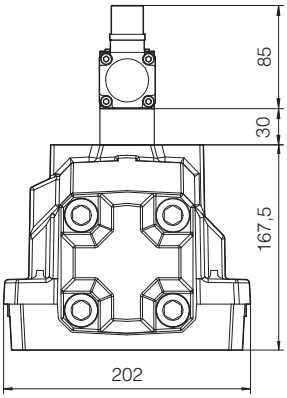

1 = Air bleeding 3

Notes: For option /B the proportional solenoid and the LVDT transducer are at side of port A of the main stage

14 RELATED DOCUMENTATION

FS001	Basics for digital electrohydraulics	**GS500**	Programming tools
FS900	Operating and maintenance information for proportional valves	**GS510**	Fieldbus
GS230	E-BM-TEB digital driver	**K800**	Electric and electronic connectors
GS240	E-BM-TES digital driver	**P005**	Mounting surfaces for electrohydraulic valves

Digital proportional 2-way cartridges high performance

piloted, with on-board driver and two LVDT transducers

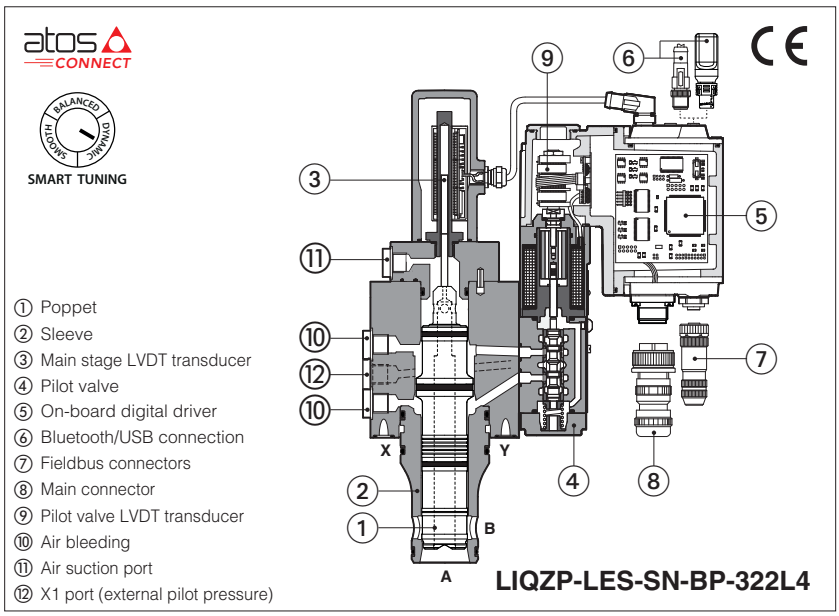

① Poppet
② Sleeve
③ Main stage LVDT transducer
④ Pilot valve
⑤ On-board digital driver
⑥ Bluetooth/USB connection
⑦ Fieldbus connectors
⑧ Main connector
⑨ Pilot valve LVDT transducer
⑩ Air bleeding
⑪ Air suction port
⑫ X1 port (external pilot pressure)

LIQZP-LEB, LIQZP-LES

Digital high performance 2-way proportional cartridges specifically designed for high speed closed loop controls. They are equipped with two LVDT position transducers for best dynamics in not compensated flow regulations. The cartridge execution for blocks installation grants high flow capabilities and minimized pressure drops.

LEB basic execution with analog reference signal or IO-Link interface for digital reference signals, valve settings, and real-time diagnostics.

LES full execution which includes also optional fieldbus interfaces for digital reference signals, valve settings, and real-time diagnostics.

Bluetooth/USB connection is always present for valve settings via mobile App and Atos PC software.

Size: **16** ÷ **125** - ISO 7368
Max flow: **600** ÷ **22000 l/min**
Max pressure: **420 bar**

1 MODEL CODE

LIQZP	-	LES	-	SN	-	NP	-	25	2	L4	/	*	/	*	*	/	*

Proportional 2-way cartridge, piloted

LEB = basic on-board digital driver
LES = full on-board digital driver

Alternated p/Q controls:
SN = none

IO-Link interface, only for LEB, see section 6 :
NP = Not present **IL** = IO-Link

Fieldbus interfaces, only for LES, see section 7 :
NP = Not present
BC = CANopen **EW** = POWERLINK
BP = PROFIBUS DP **EI** = EtherNet/IP
EH = EtherCAT **EP** = PROFINET RT/IRT

Valve size ISO 7368, see section 9 :

Size	**16**	**25**	**32**	**40**	
l/min	250	500	800	1200	
Size	**50**	**63**	**80**	**100**	**125**
l/min	2000	3000	4500	7200	9350

Nominal flow (l/min) at Δp 5 bar

Configuration:
2 = 2 way

functional symbol

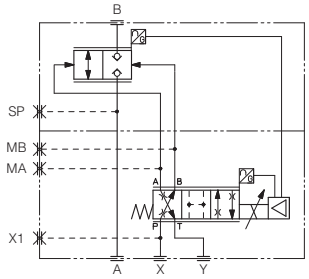

simplified symbol

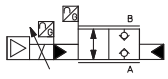

Poppet type, regulating characteristics, see section 12 :
L4 = linear

Electronic options (1), not available for LEB-SN-IL:
F = fault signal
I = current reference input and monitor 4 ÷ 20 mA
Q = enable signal
Z = double power supply (only for LES), enable, fault and monitor signals - 12 pin connector

Bluetooth option (1), see section 4 :
T = Bluetooth adapter supplied with the valve

Series number

Seals material, see section 11 :
- = NBR
PE = FKM
BT = NBR low temperature

(1) Possible combined options: /FI, /IQ, /IZ (/T Bluetooth adapter option can be combined with all other options)

2 GENERAL NOTES

Atos digital proportionals valves are CE marked according to the applicable directives (e.g. Immunity and Emission EMC Directive).
Installation, wirings and start-up procedures must be performed according to the general prescriptions shown in tech table **FS900** and in the user manuals included in the E-SW-SETUP programming software.

WARNING

To avoid overheating and possible damage of the electronic driver, the valves must be never energized without hydraulic supply to the pilot stage.
In case of prolonged pauses of the valve operation during the machine cycle, it is always advisable to disable the driver (option /Q or /Z).
A safety fuse 2,5 A installed on 24VDC power supply of each valve is always recommended, see also power supply note at sections 16 .

WARNING

The loss of the pilot pressure causes the undefined position of the main poppet.
The sudden interruption of the power supply during the valve operation causes the immediate shut-off of the main poppet.
This could cause pressure surges in the hydraulic system or high decelerations which may lead to machine damages.

3 VALVE SETTINGS AND PROGRAMMING TOOLS - see tech. table **GS500**

3.1 Atos CONNECT mobile App

Free downloadable App for smartphones and tablets which allows quick access to valve main functional parameters and basic diagnostic information via Bluetooth, thus avoiding physical cable connection and significantly reducing commissioning time.
Atos CONNECT supports Atos digital valve drivers equipped with E-A-BTH adapter or with built-in Bluetooth. It does not support valves with p/Q control or axis controls.

Download on the App Store

GET IT ON Google Play

3.2 E-SW-SETUP PC software

Free downloadable software for PC allows to set all valve functional parameters and to access complete diagnostic information of digital valve drivers via Bluetooth/USB service port.
Atos E-SW-SETUP PC software supports all Atos digital valve drivers and it is available at www.atos.com in MyAtos area.

WARNING: drivers USB port is not isolated! For E-C-SB-USB/M12 cable, the use of E-A-SB-USB/OPT isolator adapter is highly recommended for PC protection

Bluetooth or USB connection

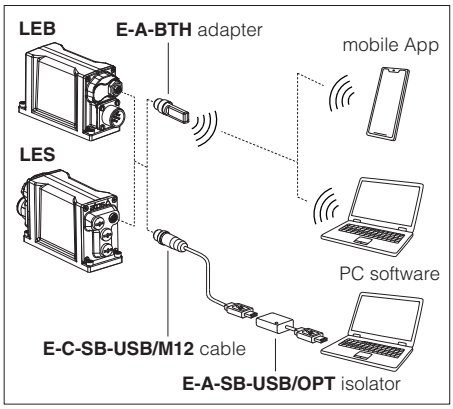

4 BLUETOOTH OPTION - see tech. table **GS500**

T option adds Bluetooth® connectivity to Atos valve drivers thanks to E-A-BTH adapter, which can be left permanently installed on-board, to allow the Bluetooth connection with the valve drivers at any time. E-A-BTH adapter can also be purchased separately and used to connect with any supported Atos digital product.
Bluetooth connection to the valve can be protected against unauthorised access by setting a personal password. The adapter leds visually indicates the status of valve driver and Bluetooth connection.

WARNING: for the list of countries where the Bluetooth adapter has been approved, see tech. table **GS500**
T option is not available for the Indian market, so the Bluetooth adapter must be ordered separately.

5 SMART TUNING

Smart tuning allows to adjust the cartridge dynamic response in order to match different performance requirements.

The cartridge is provided with 3 factory settings for the spool control:
- **dynamic** fast response time and high sensitivity for best dynamic performances. Default factory setting for cartridges
- **balanced** average response time and sensitivity suitable for major applications
- **smooth** attenuated response time and sensitivity to improve control stability in critical applications or in environments with electrical disturbances

Smart tuning setting can be switched from Dynamic (default) to Balanced or Smooth via software or fieldbus; if requested, performances can be further customized directly tuning each single control parameter. For details consult related manuals E-MAN-RI-* and Quickstart, see section 24.

For Response time and Bode diagrams see section 12.

6 IO-LINK - only for **LEB**, see tech. table **GS520**

IO-Link allows low cost digital communication between the valve and machine central unit. The valve is directly connected to a port of an IO-Link master (point-to-point connection) via low-cost unshielded cables for digital reference, diagnostic and settings. The IO-Link master works as a hub exchanging this information with the machine central unit via fieldbus.

7 FIELDBUS - only for **LES**, see tech. table **GS510**

Fieldbus allows valve direct communication with machine control unit for digital reference, valve diagnostics and settings. These execution allow to operate the valves through fieldbus or analog signals available on the main connector.

8 GENERAL CHARACTERISTICS

Assembly position	Any position
Subplate surface finishing to ISO 4401	Acceptable roughness index: Ra ≤0,8, recommended Ra 0,4 – Flatness ratio 0,01/100
MTTFd valves according to EN ISO 13849	75 years, for further details see technical table P007
Ambient temperature range	**Standard** = -20°C ÷ +60°C **/PE** option = -20°C ÷ +60°C **/BT** option = -40°C ÷ +60°C
Storage temperature range	**Standard** = -20°C ÷ +70°C **/PE** option = -20°C ÷ +70°C **/BT** option = -40°C ÷ +70°C
Surface protection	Zinc coating with black passivation, galvanic treatment (driver housing)
Corrosion resistance	Salt spray test (EN ISO 9227) > 200 h
Vibration resistance	See technical table G004
Compliance	CE according to EMC directive 2014/30/EU (Immunity: EN 61000-6-2; Emission: EN 61000-6-3) RoHS Directive 2011/65/EU as last update by 2015/863/EU REACH Regulation (EC) n°1907/2006

9 HYDRAULIC CHARACTERISTICS - based on mineral oil ISO VG 46 at 50 °C

Size	16	25	32	40	50	63	80	100	125
Nominal flow Δp A-B [l/min]									
Δp = 5 bar	250	500	800	1200	2000	3000	4500	7200	9350
Δp = 10 bar	350	700	1100	1700	2800	4250	6350	10200	13200
Max permissible flow	600	1200	1800	2500	4000	6000	10000	16000	22000
Max pressure [bar]	Ports A, B = 420 X = 350 Y ≤ 10								
Nominal flow of pilot valve at Δp = 70 bar [l/min]	4	8	20	40	40	100	100	100	100
Leakage of pilot valve at P = 100 bar [l/min]	0,2	0,2	0,3	0,7	0,7	1	1	1	1
Piloting pressure [bar]	min: 40% of system pressure max 350 recommended 140 ÷ 160								
Piloting volume [cm^3]	1,6	2,2	7,0	9,4	17,7	32,5	39,5	49,5	124,9
Piloting flow **(1)** [l/min]	4	5,3	14	19	35,5	56	60	60	88,1
Response time 0 ÷ 100% step signal **(2)** [ms]	24	25	28	30	30	35	40	50	90
Hysteresis [% of the max regulation]	≤ 0,1								
Repeatability [% of the max regulation]	± 0,1								
Thermal drift	zero point displacement < 1% at ΔT = 40°C								

(1) With step reference input 0÷100% **(2)** With pilot pressure = 140 bar, see datailed diagrams in section 12.2

10 ELECTRICAL CHARACTERISTICS

Power supplies	Nominal : +24 VDC Rectified and filtered : VRMS = 20 ÷ 32 VMAX (ripple max 10 % VPP)				
Max power consumption	50 W				
Max. solenoid current	2,6 A				
Coil resistance R at 20°C	3 ÷ 3,3 Ω				
Analog input signals	Voltage: range ±10 VDC (24 VMAX tolerant) Input impedance: Ri > 50 kΩ Current: range ±20 mA Input impedance: Ri = 500 Ω				
Monitor outputs	Output range: voltage ±10 VDC @ max 5 mA current ±20 mA @ max 500 Ω load resistance				
Enable input	Range: 0 ÷ 5 VDC (OFF state), 9 ÷ 24 VDC (ON state), 5 ÷ 9 VDC (not accepted); Input impedance: Ri > 10 kΩ				
Fault output	Output range: 0 ÷ 24 VDC (ON state > [power supply - 2 V] ; OFF state < 1 V) @ max 50 mA; external negative voltage not allowed (e.g. due to inductive loads)				
Alarms	Solenoid not connected/short circuit, cable break with current reference signal, over/under temperature, valve spool transducer malfunctions, alarms history storage function				
Insulation class	H (180°) Due to the occurring surface temperatures of the solenoid coils, the European standards ISO 13732-1 and EN982 must be taken into account				
Protection degree to DIN EN60529	IP66 / IP67 with mating connectors				
Duty factor	Continuous rating (ED=100%)				
Tropicalization	Tropical coating on electronics PCB				
Additional characteristics	Short circuit protection of solenoid's current supply; 3 leds for diagnostic (only for LES); poppet position control by P.I.D. with rapid solenoid switching; protection against reverse polarity of power supply				
Communication interface	USB Atos ASCII coding	IO-Link Interface and System Specification 1.1.3	CANopen EN50325-4 + DS408	PROFIBUS DP EN50170-2/IEC61158	EtherCAT POWERLINK EtherNet/IP PROFINET IO RT/IRT IEC 61158
Communication physical layer	not insulated USB 2.0+USB OTG	SDCI class port B	optical insulated CAN ISO11898	optical insulated RS485	Fast Ethernet, insulated 100 Base TX
Recommended wiring cable	LiYCY shielded cables, see section 20				

Note: a maximum time of 800 ms (1000 ms just for size 125), depending on communication type, has to be considered between the driver energizing with the 24 VDC power supply and when the valve is ready to operate. During this time the current to the valve coils is switched to zero.

11 SEALS AND HYDRAULIC FLUIDS - for other fluids not included in below table, consult our technical office

Seals, recommended fluid temperature		NBR seals (standard) = -20°C ÷ +60°C, with HFC hydraulic fluids = -20°C ÷ +50°C FKM seals (/PE option) = -20°C ÷ +80°C NBR low temp. seals (/BT option) = -40°C ÷ +60°C, with HFC hydraulic fluids = -20°C ÷ +50°C		
Recommended viscosity		20÷100 mm²/s - max allowed range 15 ÷ 380 mm²/s		
Max fluid contamination level	normal operation	ISO4406 class 18/16/13 NAS1638 class 7		see also filter section at www.atos.com or KTF catalog
	longer life	ISO4406 class 16/14/11 NAS1638 class 5		
Hydraulic fluid		**Suitable seals type**	**Classification**	**Ref. Standard**
Mineral oils		NBR, FKM, NBR low temp.	HL, HLP, HLPD, HVLP, HVLPD	DIN 51524
Flame resistant without water		FKM	HFDU, HFDR	ISO 12922
Flame resistant with water		NBR, NBR low temp.	HFC	

12 DIAGRAMS (based on mineral oil ISO VG 46 at 50 °C)

12.1 Regulation diagrams (values measured at Δp 5 bar)

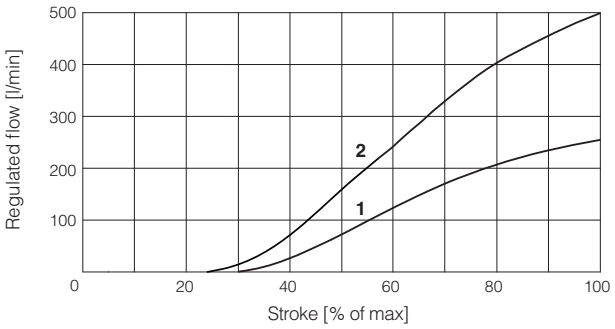

1 = LIQZP-L*-162L4
2 = LIQZP-L*-252L4

3 = LIQZP-L*-322L4
4 = LIQZP-L*-402L4

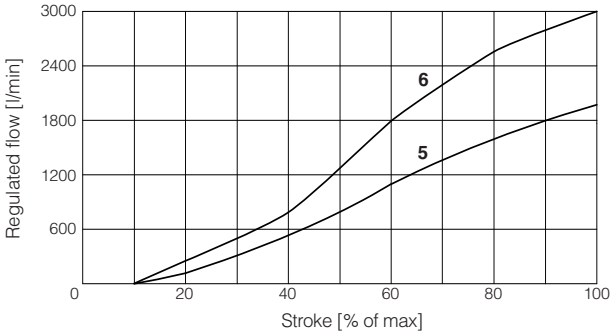

5 = LIQZP-L*-502L4
6 = LIQZP-L*-632L4

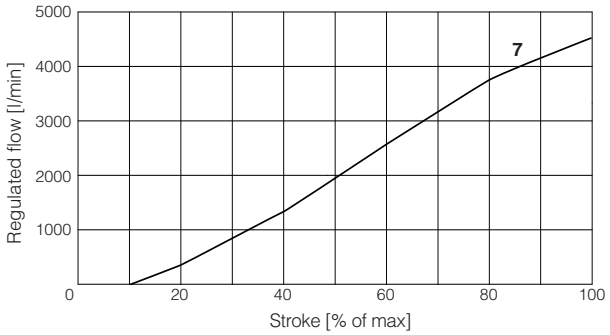

7 = LIQZP-L*-802L4

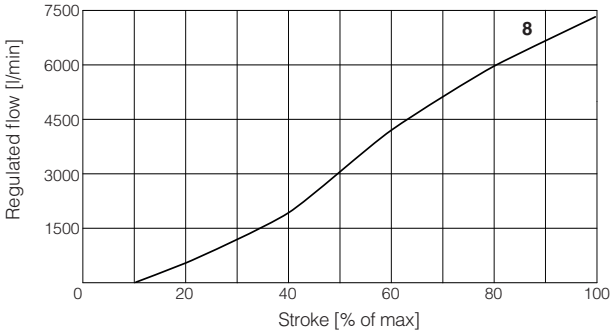

8 = LIQZP-L*-1002L4

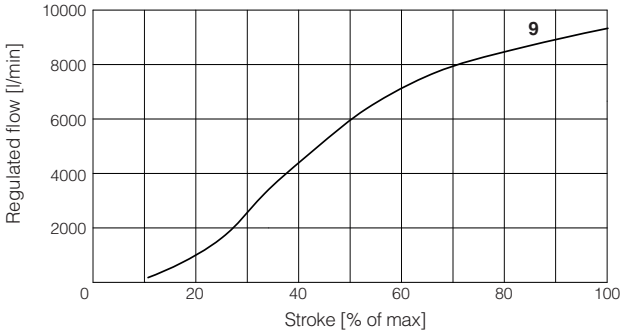

9 = LIQZP-L*-1252L4

12.2 Response time

The response times in below diagrams are measured at different steps of the reference input signal. They have to be considered as average values.

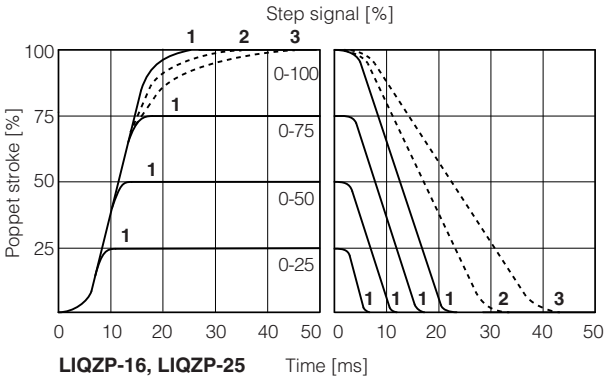

LIQZP-16, LIQZP-25

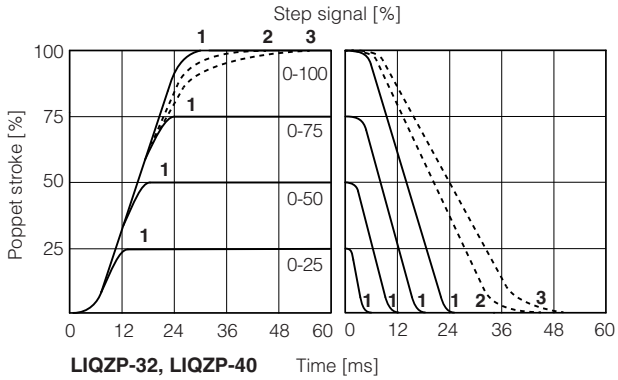

LIQZP-32, LIQZP-40
LIQZP-50

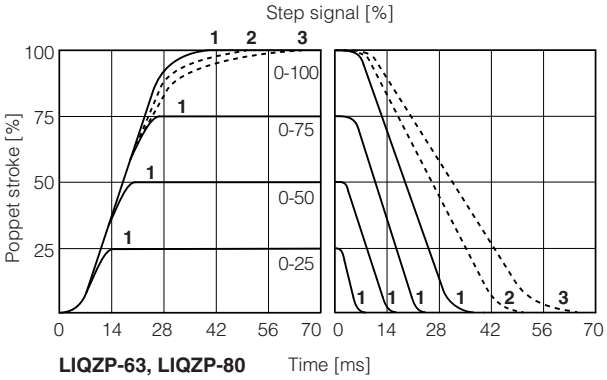

LIQZP-63, LIQZP-80

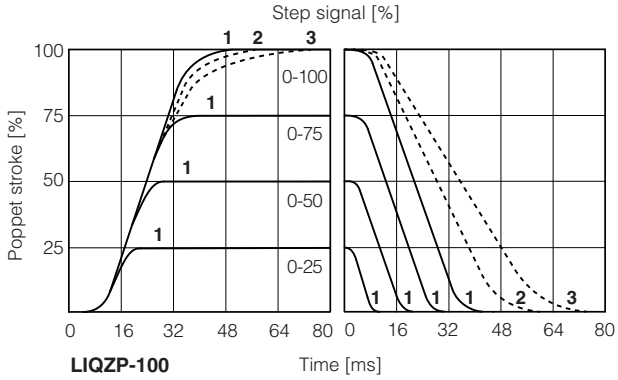

LIQZP-100

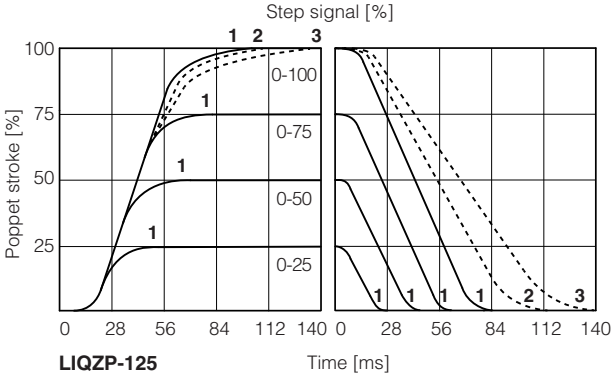

LIQZP-125

1 = dynamic **2** = balanced (*) **3** = smooth (*)

(*) Response time is represented only for 0-100% step; for intermediate steps, the response time increment of presets 2 (balanced) and 3 (smooth) with respect to the preset 1 (dynamic) is proportional to the step amplitude of the reference input signal

12.3 Bode diagrams LIQZP-L*-162L4
Stated at nominal hydraulic conditions

50% ± 5% nominal stroke:
1 = dynamic
2 = balanced
3 = smooth

10% ↔ 90% nominal stroke:
4 = dynamic
5 = balanced
6 = smooth

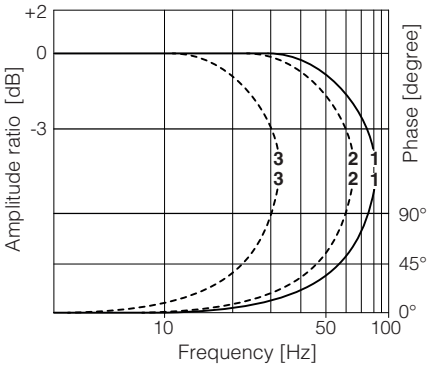

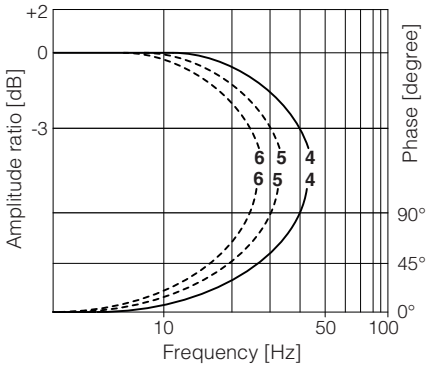

12.4 Bode diagrams LIQZP-L*-252L4
Stated at nominal hydraulic conditions

50% ± 5% nominal stroke:
1 = dynamic
2 = balanced
3 = smooth

10% ↔ 90% nominal stroke:
4 = dynamic
5 = balanced
6 = smooth

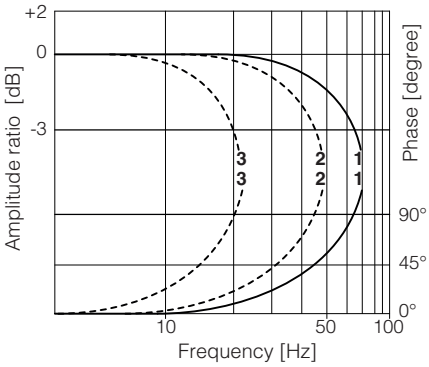

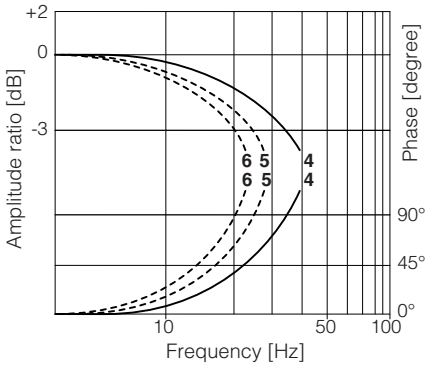

12.5 Bode diagrams LIQZP-L*-322L4
Stated at nominal hydraulic conditions

50% ± 5% nominal stroke:
1 = dynamic
2 = balanced
3 = smooth

10% ↔ 90% nominal stroke:
4 = dynamic
5 = balanced
6 = smooth

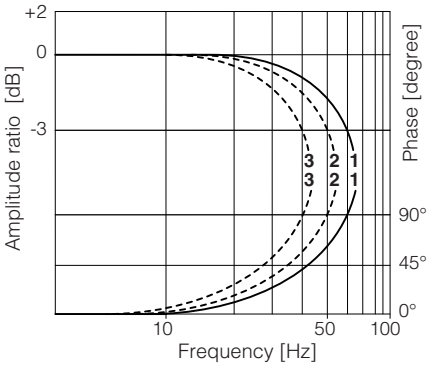

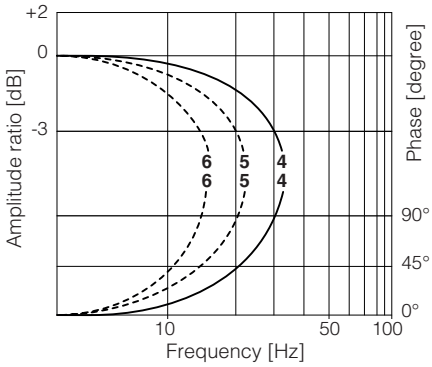

12.6 Bode diagrams LIQZP-L*-402L4
Stated at nominal hydraulic conditions

50% ± 5% nominal stroke:
1 = dynamic
2 = balanced
3 = smooth

10% ↔ 90% nominal stroke:
4 = dynamic
5 = balanced
6 = smooth

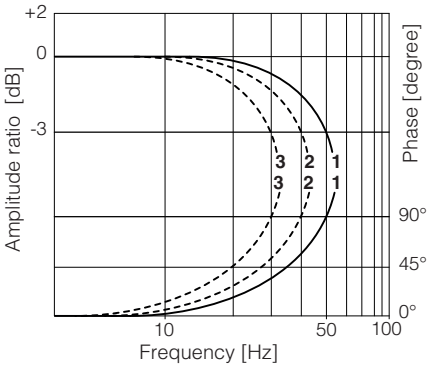

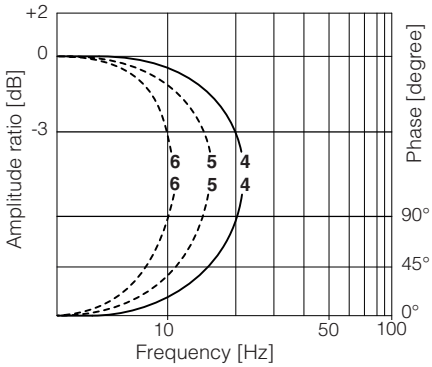

12.7 Bode diagrams LIQZP-L*-502L4
Stated at nominal hydraulic conditions

50% ± 5% nominal stroke:
1 = dynamic
2 = balanced
3 = smooth

10% ↔ 90% nominal stroke:
4 = dynamic
5 = balanced
6 = smooth

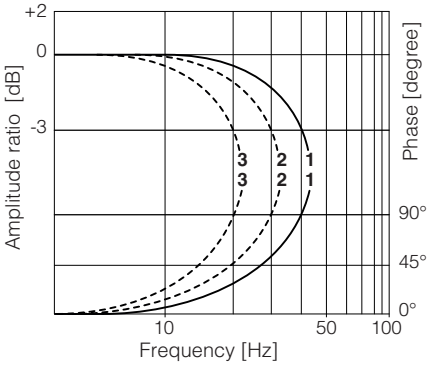

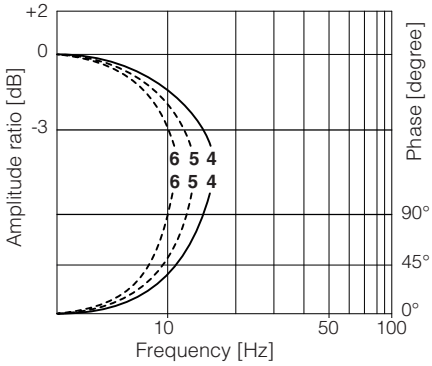

12.8 Bode diagrams LIQZP-L*-632L4
Stated at nominal hydraulic conditions

50% ± 5% nominal stroke:
1 = dynamic
2 = balanced
3 = smooth

10% ↔ 90% nominal stroke:
4 = dynamic
5 = balanced
6 = smooth

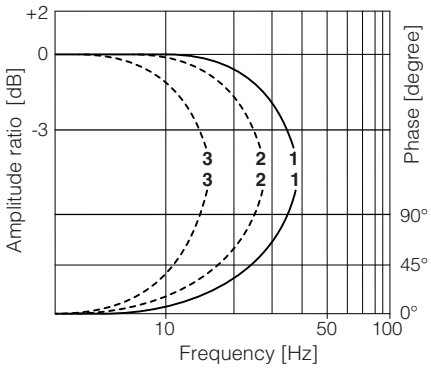

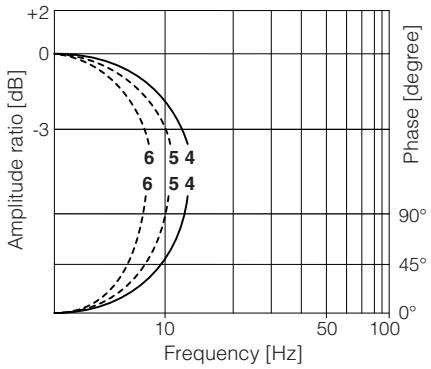

12.9 Bode diagrams LIQZP-L*-802L4
Stated at nominal hydraulic conditions

50% ± 5% nominal stroke:
1 = dynamic
2 = balanced
3 = smooth

10% ↔ 90% nominal stroke:
4 = dynamic
5 = balanced
6 = smooth

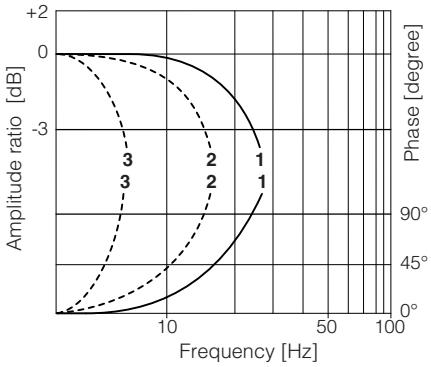

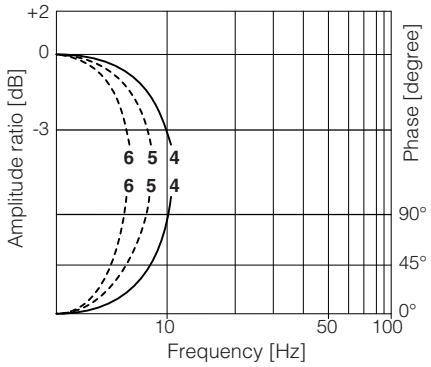

12.10 Bode diagrams LIQZP-L*-1002L4
Stated at nominal hydraulic conditions

50% ± 5% nominal stroke:
1 = dynamic
2 = balanced
3 = smooth

10% ↔ 90% nominal stroke:
4 = dynamic
5 = balanced
6 = smooth

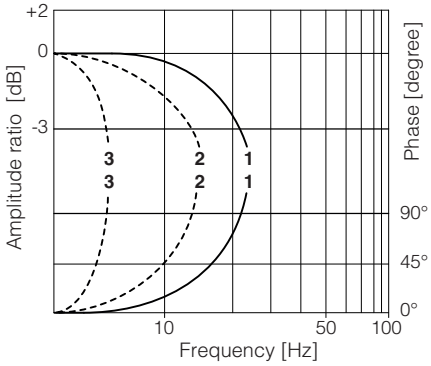

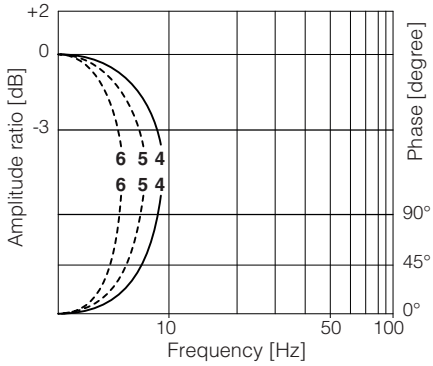

12.11 Bode diagrams LIQZP-L*-1252L4
Stated at nominal hydraulic conditions

50% ± 5% nominal stroke:
1 = dynamic
2 = balanced
3 = smooth

10% ↔ 90% nominal stroke:
4 = dynamic
5 = balanced
6 = smooth

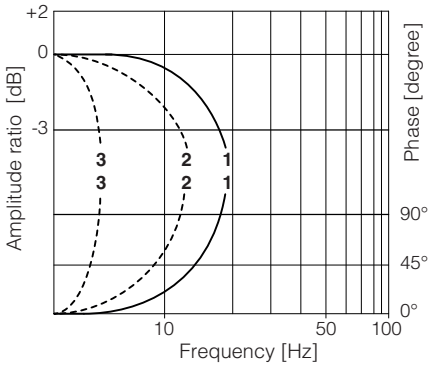

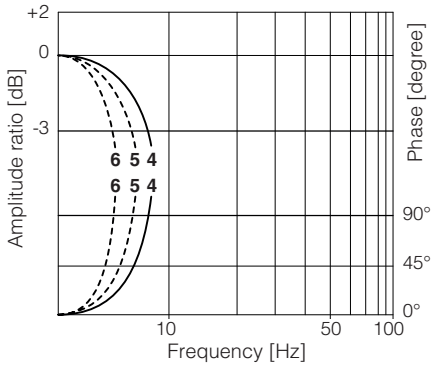

13 ELECTRONIC OPTIONS - not available for LEB-SN-IL

F = This option permits to monitor the eventual fault condition of the driver, as for example the solenoid short circuit/not connected, reference signal cable broken for option /I, poppet position transducer broken, etc. - see 16.7 for signal specifications.

I = This option provides 4 ÷ 20 mA current reference and monitor signals, instead of the standard 0 ÷ 10 VDC.
Input signal can be reconfigured via software selecting between voltage and current, within a maximum range of ±10 VDC or ±20 mA.
It is normally used in case of long distance between the machine control unit and the valve or where the reference signal can be affected by electrical noise; the valve functioning is disabled in case of reference signal cable breakage.

Q = This option permits to inhibit the valve function without removing the power supply to the driver. Upon disable command the current to the solenoid is zeroed and the valve's poppet moves to rest position.
The option /Q is suggested for all cases where the valve has to be frequently inhibited during the machine cycle – see 16.5 for signal specifications.

Z = This option provides, on the 12 pin main connector, the following additional features:
Fault output signal - see above option **/F**
Enable input signal - see above option **/Q**
Repeat enable output signal - only for **LEB-SN-NP** (see 16.6)
Power supply for driver's logics and communication - only for **LES** (see 16.2)

14 POSSIBLE COMBINED OPTIONS

/FI, /IQ, /IZ

Note: **/T** Bluetooth adapter option can be combined with all other options

15 AIR BLEEDING

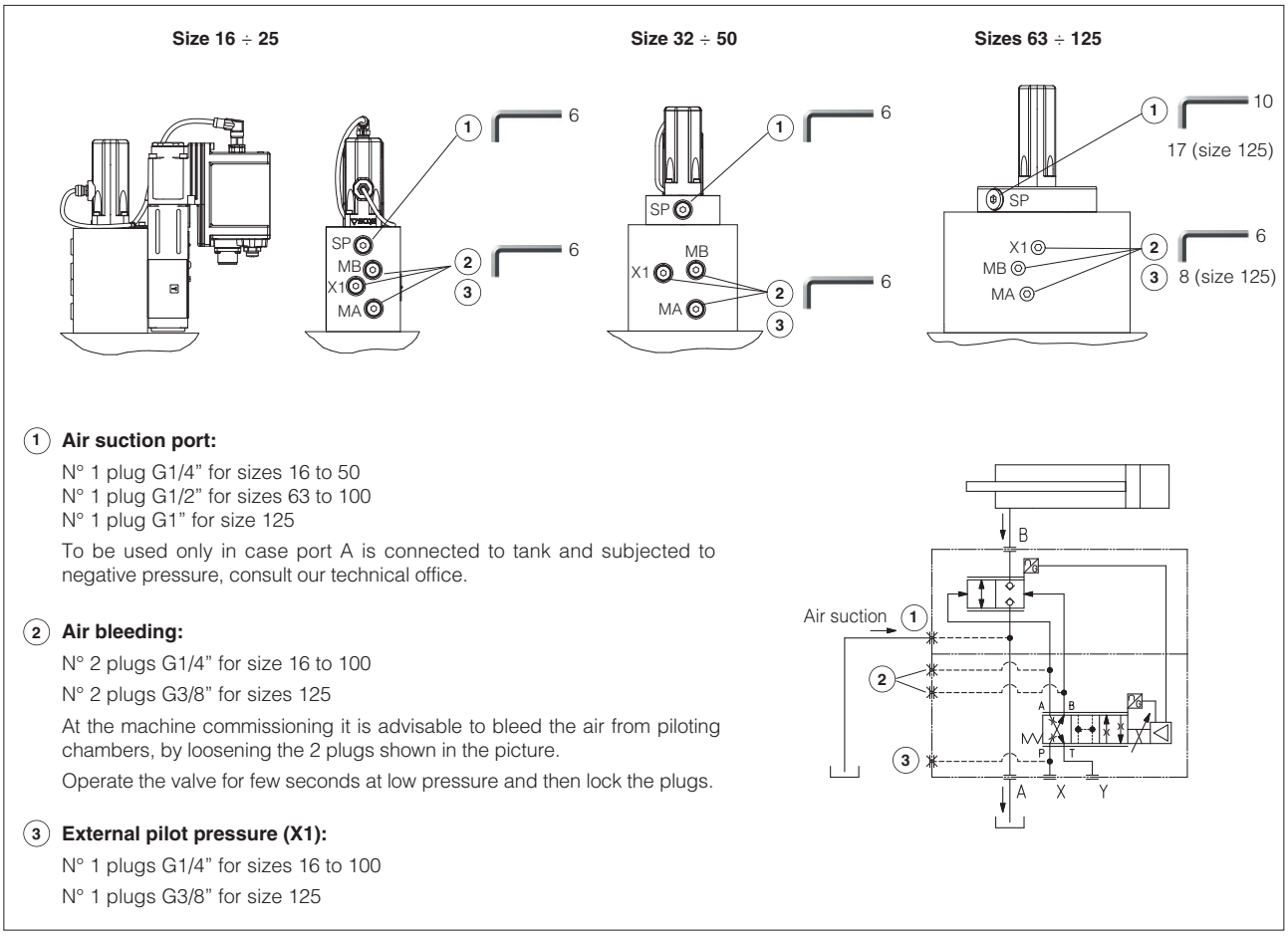

(1) **Air suction port:**

N° 1 plug G1/4" for sizes 16 to 50
N° 1 plug G1/2" for sizes 63 to 100
N° 1 plug G1" for size 125

To be used only in case port A is connected to tank and subjected to negative pressure, consult our technical office.

(2) **Air bleeding:**

N° 2 plugs G1/4" for size 16 to 100

N° 2 plugs G3/8" for sizes 125

At the machine commissioning it is advisable to bleed the air from piloting chambers, by loosening the 2 plugs shown in the picture.

Operate the valve for few seconds at low pressure and then lock the plugs.

(3) **External pilot pressure (X1):**

N° 1 plugs G1/4" for sizes 16 to 100

N° 1 plugs G3/8" for size 125

16 POWER SUPPLY AND SIGNALS SPECIFICATIONS

Generic electrical output signals of the valve (e.g. fault or monitor signals) must not be directly used to activate safety functions, like to switch-ON/OFF the machine's safety components, as prescribed by the European standards (Safety requirements of fluid technology systems and components-hydraulics, ISO 4413).

For **LEB-SN-IL** signals see section 16

16.1 Power supply (V+ and V0)

The power supply must be appropriately stabilized or rectified and filtered: apply at least a 10000 µF/40 V capacitance to single phase rectifiers or a 4700 µF/40 V capacitance to three phase rectifiers. In case of separate power supply see 16.2.

⚠ A safety fuse is required in series to each power supply: 2,5 A time lag fuse.

16.2 Power supply for driver's logic and communication (VL+ and VL0) - only for /Z option

The power supply for driver's logic and communication must be appropriately stabilized or rectified and filtered: apply at least a 10000 µF/40 V capacitance to single phase rectifiers or a 4700 µF/40 V capacitance to three phase rectifiers.
The separate power supply for driver's logic on pin 9 and 10, allow to remove solenoid power supply from pin 1 and 2 maintaining active the diagnostics, USB and fieldbus communications.

⚠ A safety fuse is required in series to each driver's logic and communication power supply: 500 mA fast fuse.

16.3 Flow reference input signal (Q_INPUT+)

The driver controls in closed loop the valve spool position proportionally to the external reference input signal.
Reference input signal is factory preset according to selected valve code, defaults are 0 ÷ 10 VDC for standard and 4 ÷ 20 mA for /I option.
Input signal can be reconfigured via software selecting between voltage and current, within a maximum range of ±10 VDC or ± 20 mA.
Drivers with fieldbus interface can be software set to receive reference signal directly from the machine control unit (fieldbus reference).
Analog reference input signal can be used as on-off commands with input range 0 ÷ 24VDC.

16.4 Flow monitor output signal (Q_MONITOR) - not for /F

The driver generates an analog output signal proportional to the actual spool position of the valve; the monitor output signal can be software set to show other signals available in the driver (e.g. analog reference, fieldbus reference, pilot spool position).
Monitor output signal is factory preset according to selected valve code, defaults are 0 ÷ 10 VDC for standard and 4 ÷ 20 mA for /I option.
Output signal can be reconfigured via software selecting between voltage and current, within a maximum range of ±10 VDC or ± 20 mA.

16.5 Enable input signal (ENABLE) - not for standard and /F

To enable the driver, supply a 24 VDC on pin 3 (pin C): Enable input signal allows to enable/disable the current supply to the solenoid, without removing the electrical power supply to the driver; it is used to active the communication and the other driver functions when the valve must be disabled for safety reasons. This condition **does not comply** with norms IEC 61508 and ISO 13849.
Enable input signal can be used as generic digital input by software selection.

16.6 Repeat enable output signal (R_ENABLE) - only for LEB-SN-NP with /Z option

Repeat enable is used as output repeater signal of enable input signal (see 16.5).

16.7 Fault output signal (FAULT) - not for standard and /Q

Fault output signal indicates fault conditions of the driver (solenoid short circuits/not connected, reference signal cable broken for 4 ÷ 20 mA input, spool position transducer cable broken, etc.). Fault presence corresponds to 0 VDC, normal working corresponds to 24 VDC.
Fault status is not affected by the Enable input signal. Fault output signal can be used as digital output by software selection.

17 IO-LINK SIGNALS SPECIFICATIONS - only for LEB-SN-IL

17.1 Power supply for IO-Link communication (L+ and L-)

The IO-Link master provides dedicated 24 VDC power supply for IO-Link communication.
Maximum power consumption: 2 W
Internal electrical isolation of power L+, L- from P24, N24

17.2 Power supply for driver's logic and valve regulation (P24 and N24)

The IO-Link master provides dedicated 24 VDC power supply for valve regulation, logics and diagnostics.
Maximum power consumption: 50 W
Internal electrical isolation of power P24, N24 from L+, L-

17.3 IO-Link data line (C/Q)

C/Q signal is used to establish communication between IO-Link master and valve.

18 ELECTRONIC CONNECTIONS AND LEDS

18.1 Main connector signals - 7 pin - standard, /F and /Q options (A1)

PIN	Standard	/Q	/F	TECHNICAL SPECIFICATIONS	NOTES
A	**V+**			Power supply 24 VDC	Input - power supply
B	**V0**			Power supply 0 VDC	Gnd - power supply
C	**AGND**		**AGND**	Analog ground	Gnd - analog signal
		ENABLE		Enable (24 VDC) or disable (0 VDC) the valve, referred to V0	Input - on/off signal
D	**Q_INPUT+**			Flow reference input signal: ±10 VDC / ±20 mA maximum range Defaults are 0 ÷ 10 VDC for standard and 4 ÷ 20 mA for /I option	Input - analog signal **Software selectable**
E	**INPUT-**			Negative reference input signal for Q_INPUT+	Input - analog signal
F	**Q_MONITOR** referred to: AGND V0			Flow monitor output signal: ±10 VDC / ±20 mA maximum range Defaults are 0 ÷ 10 VDC for standard and 4 ÷ 20 mA for /I option	Output - analog signal **Software selectable**
			FAULT	Fault (0 VDC) or normal working (24 VDC)	Output - on/off signal
G	**EARTH**			Internally connected to the driver housing	

18.2 Main connector signal - 12 pin - /Z option (A2)

PIN	LEB /Z	LES /Z	TECHNICAL SPECIFICATIONS	NOTES
1	**V+**		Power supply 24 VDC	Input - power supply
2	**V0**		Power supply 0 VDC	Gnd - power supply
3	**ENABLE** referred to: V0	VL0	Enable (24 VDC) or disable (0 VDC) the valve	Input - on/off signal
4	**Q_INPUT+**		Flow reference input signal: ±10 VDC / ±20 mA maximum range Defaults are 0 ÷ 10 VDC for standard and 4 ÷ 20 mA for /I option	Input - analog signal **Software selectable**
5	**INPUT-**		Negative reference input signal for Q_INPUT+	Input - analog signal
6	**Q_MONITOR** referred to: AGND	VL0	Flow monitor output signal: ±10 VDC / ±20 mA maximum range Defaults are 0 ÷ 10 VDC for standard and 4 ÷ 20 mA for /I option	Input - analog signal **Software selectable**
7	**AGND**		Analog ground	Output - analog signal
		NC	Do not connect	Gnd - analog signal
8	**R_ENABLE**		Repeat enable, output repeater signal of enable input, referred to V0	Output - on/off signal
		NC	Do not connect	
9	**NC**		Do not connect	
		VL+	Power supply 24 VDC for driver's logic and communication	Input - power supply
10	**NC**		Do not connect	
		VL0	Power supply 0 VDC for driver's logic and communication	Gnd - power supply
11	**FAULT** referred to: V0	VL0	Fault (0 VDC) or normal working (24 VDC)	Output - on/off signal
PE	**EARTH**		Internally connected to the driver housing	

Note: do not disconnect VL0 before VL+ when the driver is connected to PC USB port

18.3 IO-Link connector signals - M12 - 5 pin - Coding A, port class B (A) only for **LEB-SN-IL**

PIN	SIGNAL	TECHNICAL SPECIFICATIONS	NOTES
1	**L+**	Power supply 24 VDC for IO-Link communication	Input - power supply
2	**P24**	Power supply 24 VDC for valve regulation, logics and diagnostics	Input - power supply
3	**L-**	Power supply 0 VDC for IO-Link communication	Gnd - power supply
4	**C/Q**	IO-Link data line	Input / Output - signal
5	**N24**	Power supply 0 VDC for valve regulation, logics and diagnostics	Gnd - power supply

Note: L+, L- and P24, N24 are electrically isolated

18.4 Communications connectors (B) - (C)

(B) **USB connector - M12 - 5 pin** always present

PIN	SIGNAL	TECHNICAL SPECIFICATION (1)
1	**+5V_USB**	Power supply
2	**ID**	Identification
3	**GND_USB**	Signal zero data line
4	**D-**	Data line -
5	**D+**	Data line +

(C1) (C2) **BC fieldbus execution, connector - M12 - 5 pin**

PIN	SIGNAL	TECHNICAL SPECIFICATION (1)
1	**CAN_SHLD**	Shield
2	**not used**	(C1) - (C2) pass-through connection (2)
3	**CAN_GND**	Signal zero data line
4	**CAN_H**	Bus line (high)
5	**CAN_L**	Bus line (low)

(C1) (C2) **BP fieldbus execution, connector - M12 - 5 pin**

PIN	SIGNAL	TECHNICAL SPECIFICATION (1)
1	**+5V**	Termination supply signal
2	**LINE-A**	Bus line (high)
3	**DGND**	Data line and termination signal zero
4	**LINE-B**	Bus line (low)
5	**SHIELD**	

(C1) (C2) **EH, EW, EI, EP fieldbus execution, connector - M12 - 4 pin**

PIN	SIGNAL	TECHNICAL SPECIFICATION (1)
1	**TX+**	Transmitter
2	**RX+**	Receiver
3	**TX-**	Transmitter
4	**RX-**	Receiver
	SHIELD	

(1) shield connection on connector's housing is recommended

(2) Pin 2 can be fed with external +5V supply of CAN interface

18.5 LEB-SN-NP connections layout

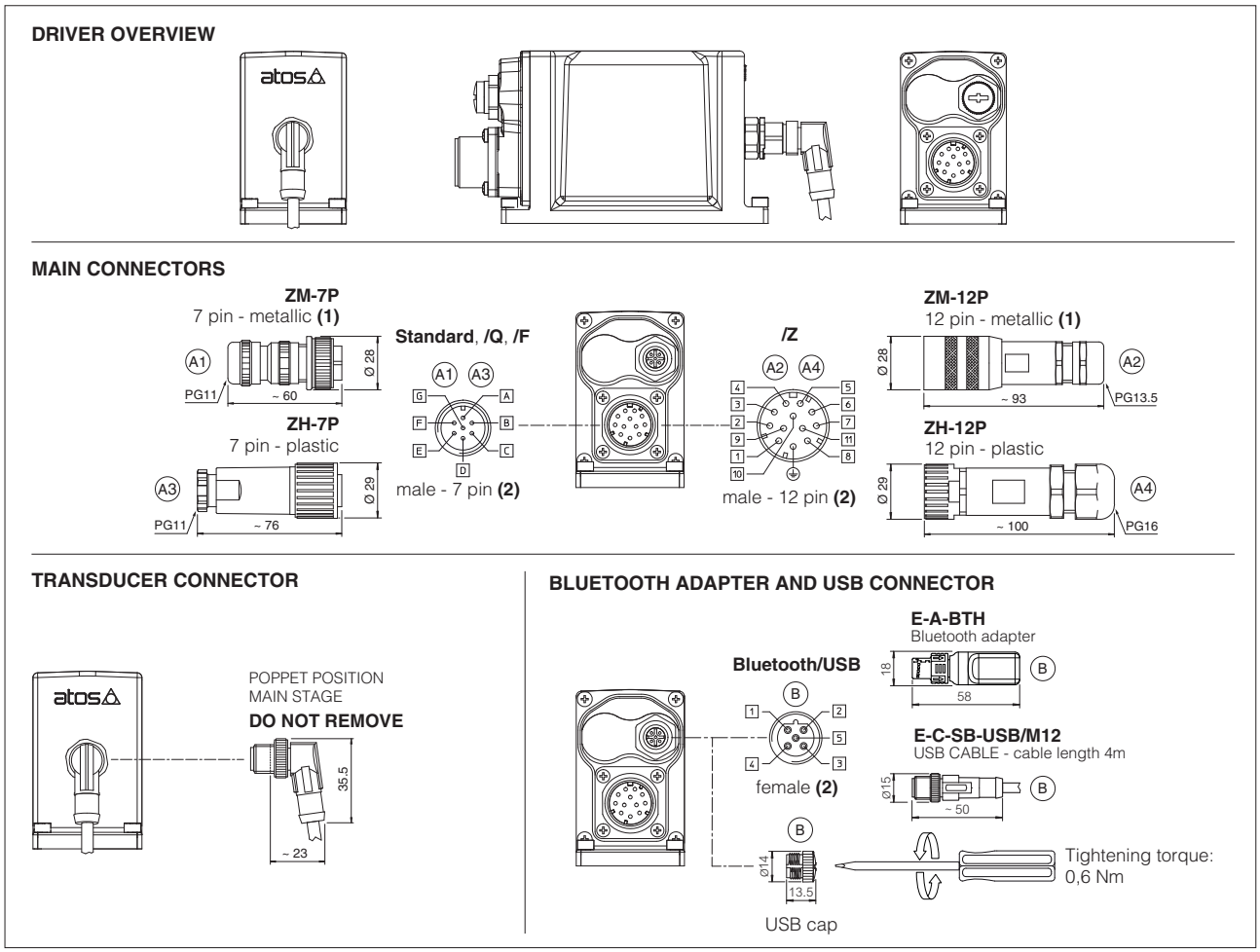

(1) Use of metallic connectors is strongly recommended in order to fulfill EMC requirements **(2)** Pin layout always referred to driver's view

18.6 LEB-SN-IL connections layout

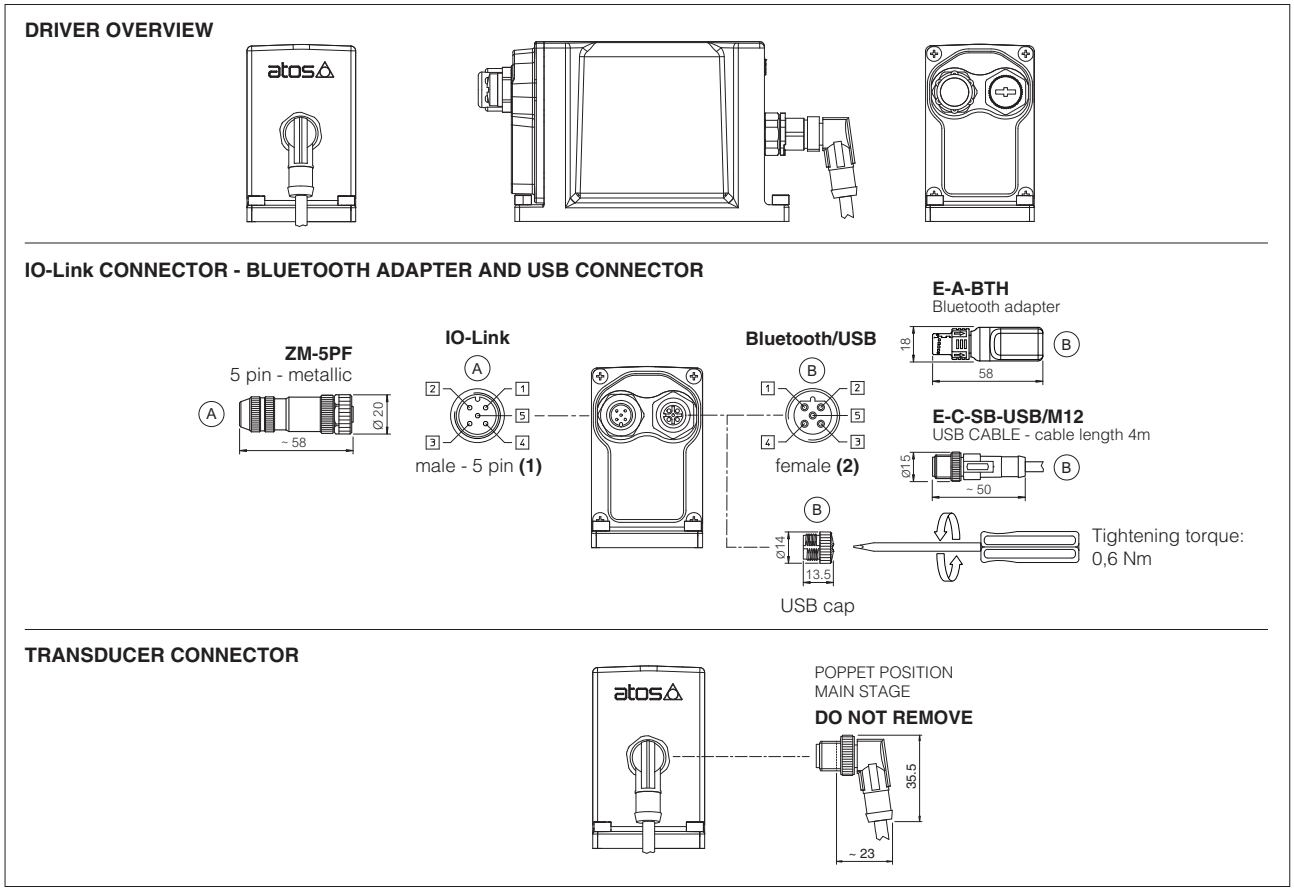

(1) Pin layout always referred to driver's view

18.7 LES connections layout

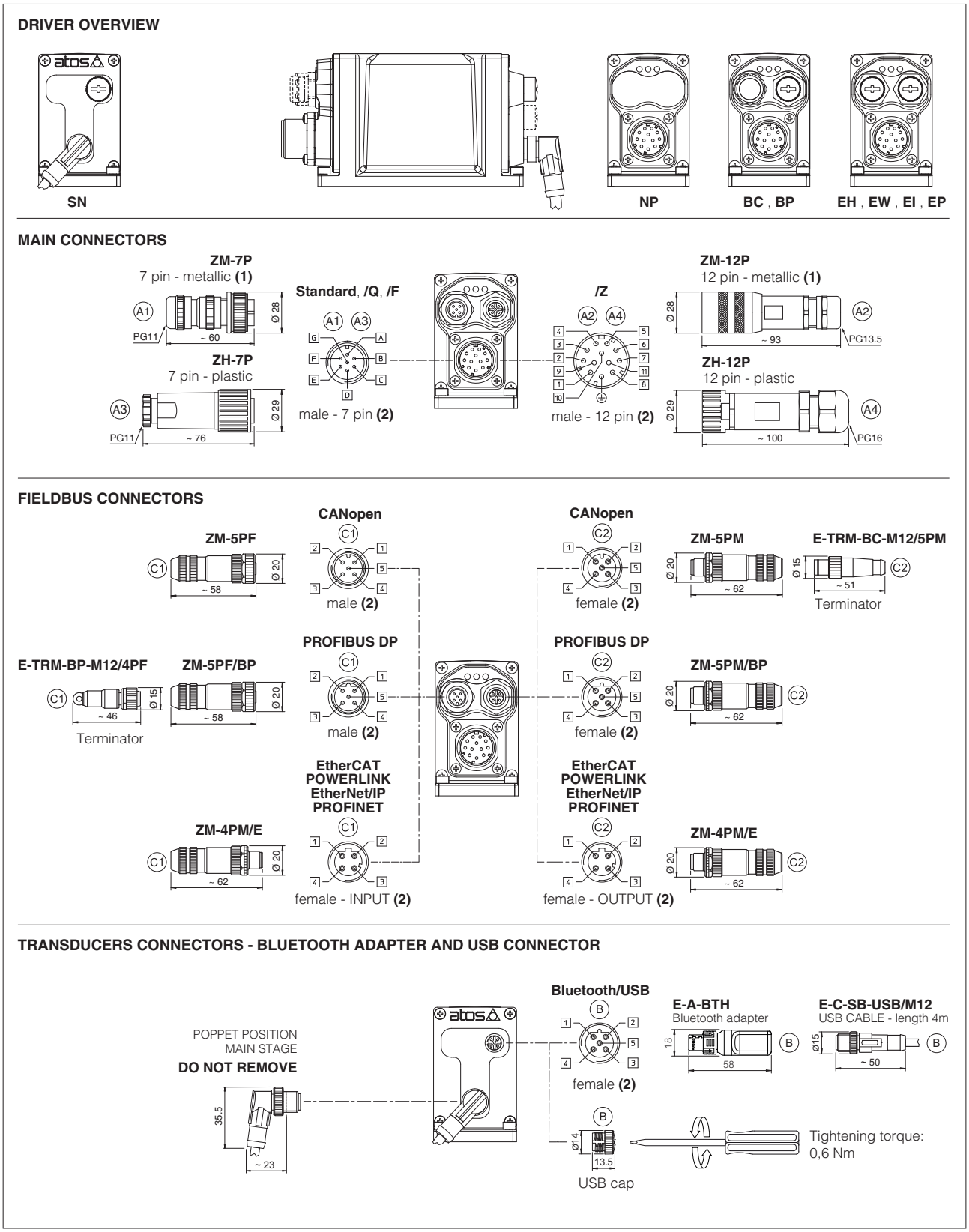

(1) Use of metallic connectors is strongly recommended in order to fulfill EMC requirements **(2)** Pin layout always referred to driver's view

18.8 Diagnostic LEDs - only for **LES**

Three leds show driver operative conditions for immediate basic diagnostics. Please refer to the driver user manual for detailed information.

FIELDBUS / LEDS	NP Not Present	BC CANopen	BP PROFIBUS DP	EH EtherCAT	EW POWERLINK	EI EtherNet/IP	EP PROFINET
L1	VALVE STATUS			LINK/ACT			
L2	NETWORK STATUS			NETWORK STATUS			
L3	SOLENOID STATUS			LINK/ACT			

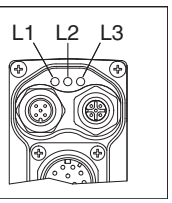

19 IN / OUT FIELDBUS COMMUNICATION CONNECTORS

Two fieldbus communication connectors are always available for digital drivers executions BC, BP, EH, EW, EI, EP. This features allows considerable technical advantages in terms of installation simplicity, wirings reduction and also avoid the usage expensive T-connectors.
For BC and BP executions the fieldbus connectors have an internal pass-through connection and can be used like end point of the fieldbus network, using an external terminator (see tech table **GS500**).
For EH, EW, EI and EP executions the external terminators are not required: each connector is internally terminated.

BC and BP pass-through connection

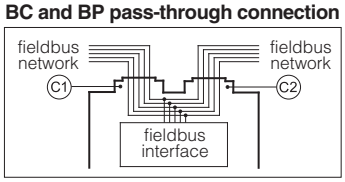

20 CONNECTORS CHARACTERISTICS - to be ordered separately

20.1 Main connectors - 7 pin

CONNECTOR TYPE	POWER SUPPLY AND SIGNALS	POWER SUPPLY AND SIGNALS
CODE	A1 ZM-7P	A3 ZH-7P
Type	7pin female straight circular	7pin female straight circular
Standard	According to MIL-C-5015	According to MIL-C-5015
Material	Metallic	Plastic reinforced with fiber glass
Cable gland	PG11	PG11
Recommended cable	LiYCY 7 x 0,75 mm² max 20 m (logic and power supply) or LiYCY 7 x 1 mm² max 40 m (logic and power supply)	LiYCY 7 x 0,75 mm² max 20 m (logic and power supply) or LiYCY 7 x 1 mm² max 40 m (logic and power supply)
Conductor size	up to 1 mm² - available for 7 wires	up to 1 mm² - available for 7 wires
Connection type	to solder	to solder
Protection (EN 60529)	IP 67	IP 67

20.2 Main connectors - 12 pin

CONNECTOR TYPE	POWER SUPPLY AND SIGNALS	POWER SUPPLY AND SIGNALS
CODE	A2 ZM-12P	A4 ZH-12P
Type	12pin female straight circular	12pin female straight circular
Standard	DIN 43651	DIN 43651
Material	Metallic	Plastic reinforced with fiber glass
Cable gland	PG13,5	PG16
Recommended cable	LiYCY 12 x 0,75 mm² max 20 m (logic and power supply)	LiYCY 10 x 0,14mm² max 40 m (logic) LiYY 3 x 1mm² max 40 m (power supply)
Conductor size	0,5 mm² to 1,5 mm² - available for 12 wires	0,14 mm² to 0,5 mm² - available for 9 wires 0,5 mm² to 1,5 mm² - available for 3 wires
Connection type	to crimp	to crimp
Protection (EN 60529)	IP 67	IP 67

20.3 IO-Link connector - only for **LEB-SN-IL**

CONNECTOR TYPE	IL IO-Link
CODE	A ZM-5PF
Type	5pin female straight circular
Standard	M12 coding A – IEC 61076-2-101
Material	Metallic
Cable gland	Pressure nut - cable diameter 6÷8 mm
Recommended cable	5 x 0,75 mm² max 20 m
Connection type	screw terminal
Protection (EN 60529)	IP 67

20.4 Fieldbus communication connectors

CONNECTOR TYPE	BC CANopen (1)		BP PROFIBUS DP (1)		EH EtherCAT, EW POWERLINK, EI EtherNet/IP, EP PROFINET (2)
CODE	C1 ZM-5PF	C2 ZM-5PM	C1 ZM-5PF/BP	C2 ZM-5PM/BP	C1 C2 ZM-4PM/E
Type	5 pin female straight circular	5 pin male straight circular	5 pin female straight circular	5 pin male straight circular	4 pin male straight circular
Standard	M12 coding A – IEC 61076-2-101		M12 coding B – IEC 61076-2-101		M12 coding D – IEC 61076-2-101
Material	Metallic		Metallic		Metallic
Cable gland	Pressure nut - cable diameter 6÷8 mm		Pressure nut - cable diameter 6÷8 mm		Pressure nut - cable diameter 4÷8 mm
Cable	CANbus Standard (DR 303-1)		PROFIBUS DP Standard		Ethernet standard CAT-5
Connection type	screw terminal		screw terminal		terminal block
Protection (EN 60529)	IP67		IP 67		IP 67

(1) E-TRM-** terminators can be ordered separately - see tech table **GS500**

(2) Internally terminated

21 FASTENING BOLTS AND VALVE MASS

Type	Size	Fastening bolts (1)	Mass [kg]
LIQZP	16	4 socket head screws M8x90 class 12.9 Tightening torque = 35 Nm	5,6
	25	4 socket head screws M12x100 class 12.9 Tightening torque = 125 Nm	8,2
	32	4 socket head screws M16x60 class 12.9 Tightening torque = 300 Nm	10,9
	40	4 socket head screws M20x70 class 12.9 Tightening torque = 600 Nm	16,7
	50	4 socket head screws M20x80 class 12.9 Tightening torque = 600 Nm	23,9
	63	4 socket head screws M30x120 class 12.9 Tightening torque = 2100 Nm	44,0
	80	8 socket head screws M24x80 class 12.9 Tightening torque = 1000 Nm	71,6
	100	8 socket head screws M30x120 class 12.9 Tightening torque = 2100 Nm	122,5
	125	8 socket head screws M36x260 class 12.9 Tightening torque = 3600 Nm	375

(1) Fastening bolts supplied with the valve

22 MAIN CONNECTORS INSTALLATION DIMENSIONS

Installation 1 - possible interference between manifold and main connector

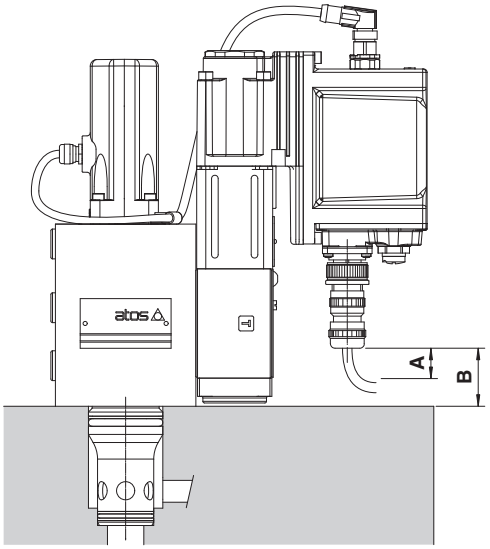

A = 15 mm space to remove the 7 or 12 pin main connectors

B = Clearance between main connector to valve's mounting surface. See the below table to verify eventual interferences, depending to the valve size and connector type

Installation 2 - no interference

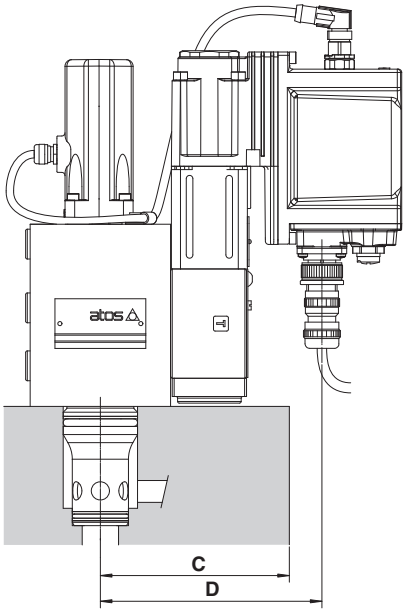

C = Max manifold dimension to avoid interference with the main connector, see below table

Reference dimension	Main connector code	Valve size								
		16	25	32	40	50	63	80	100	125
B	ZM-7P	32	32	32	40	45	68	68	80	142
	ZH-7P	**(1)**	**(1)**	**(1)**	**(1)**	29	52	52	64	125
	ZM-12P	**(1)**	**(1)**	**(1)**	**(1)**	**(1)**	35	35	47	108
	ZH-12P	**(1)**	**(1)**	**(1)**	**(1)**	**(1)**	**(1)**	**(2)**	40	101
C (max)	-	104	114	121	134	141	172	202	229	271
D	-	124	134	141	154	161	192	222	249	291

Above dimenions refer to the main connector fully screwed to driver's connector. The space **A** = 15 mm to remove the connector must be considered

(1) The connector installation can be performed only if the valve's driver protrudes from the edge of the relevant mounting manifold as rapresented in above "Installation 2"

(2) The connector installation may be critic, depending to the cable size and bending radius

23 INSTALLATION DIMENSIONS [mm]

LIQZP-LEB-*-162
LIQZP-LES-*-162

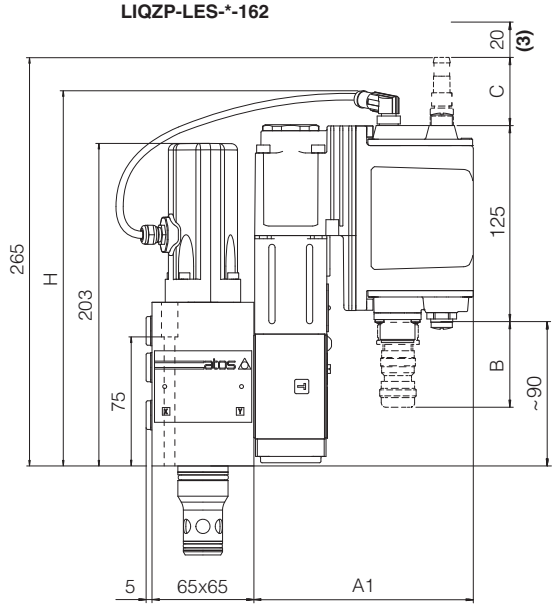

LIQZP-LEB-*-252
LIQZP-LES-*-252

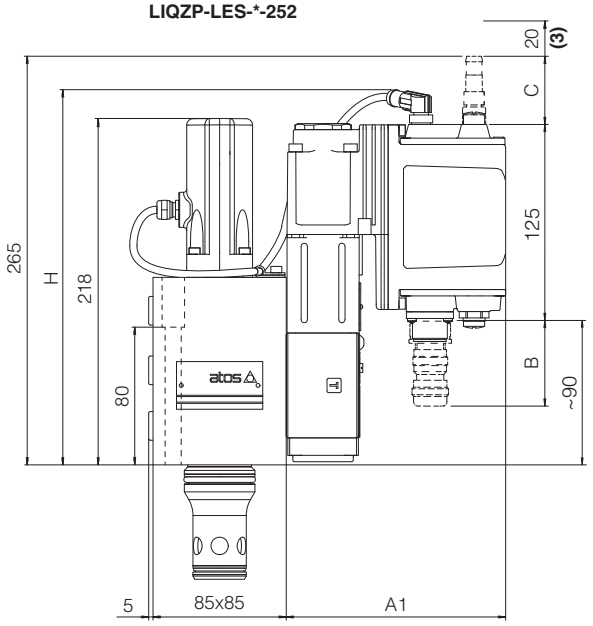

LIQZP-LEB-*-322
LIQZP-LES-*-322

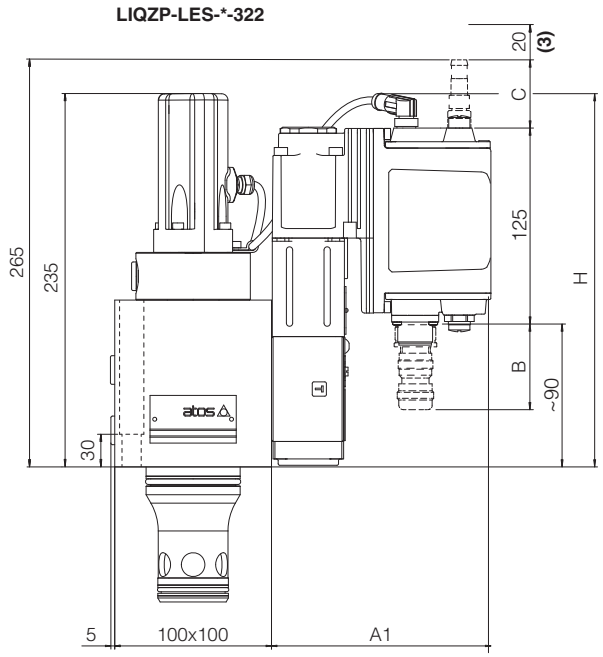

LIQZP-LEB-*-402
LIQZP-LES-*-402

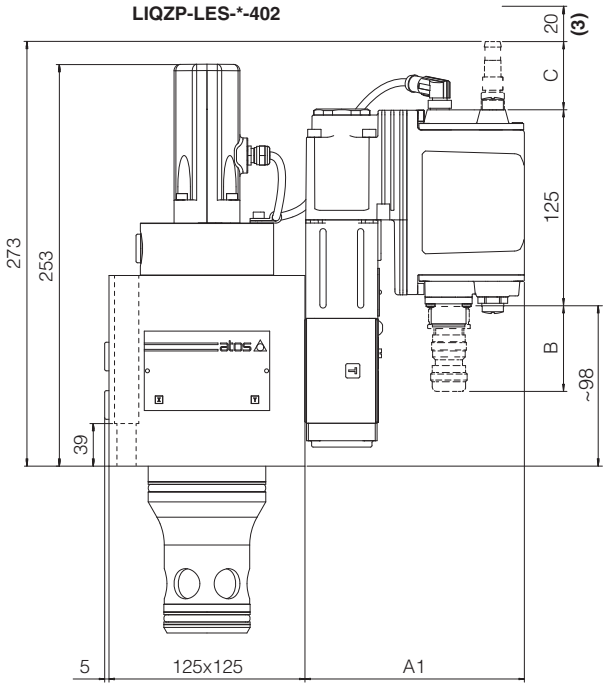

LIQZP	A1	B (1)	C (2)	H
LEB - SN - IL	140	60	-	242
LEB - SN - NP	140	60	-	242
LES - SN - NP, BC, BP, EH	140	60	58	235
LES - SN - EW, EI, EP	155	60	58	235

(1) The indicated dimension refers to the main connector ZM-7P. See section 22 for main connectors installation dimensions
(2) The indicated dimension refers to the longer connectors or Bluetooth adapter
For dimensions of connectors and Bluetooth adapter, see sections 18.5, 18.6 and 18.7
(3) Space required for connection cable and for connector removal

Note: for mounting surface and cavity dimensions, see table P006

LIQZP-LEB-*-502
LIQZP-LES-*-502

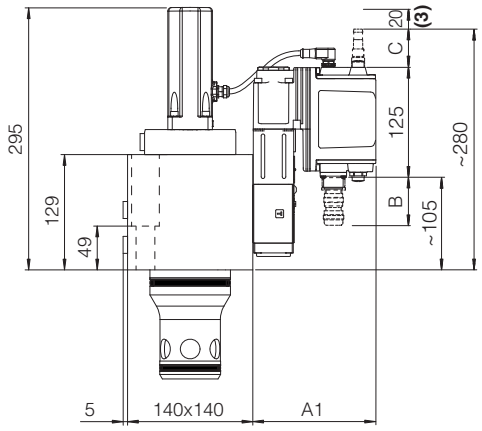

LIQZP-LEB-*-632
LIQZP-LES-*-632

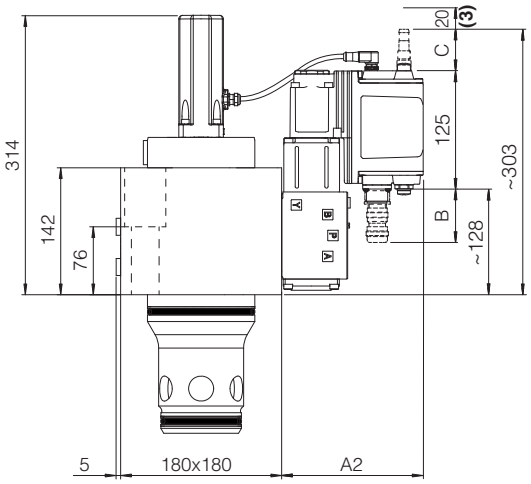

LIQZP-LEB-*-802
LIQZP-LES-*-802

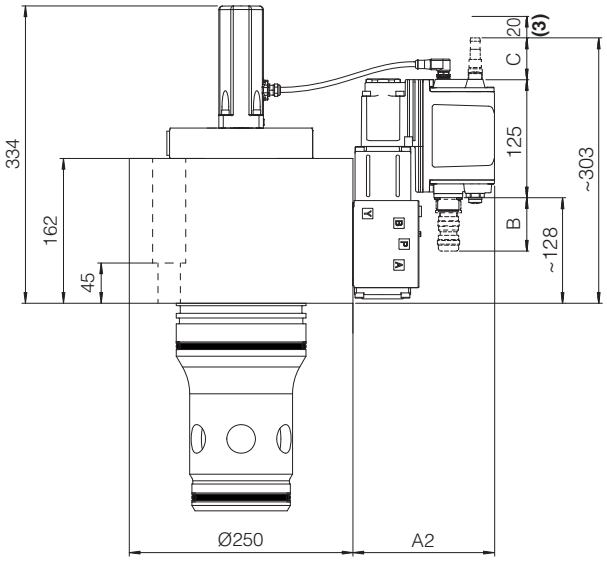

LIQZP-LEB-*-1002
LIQZP-LES-*-1002

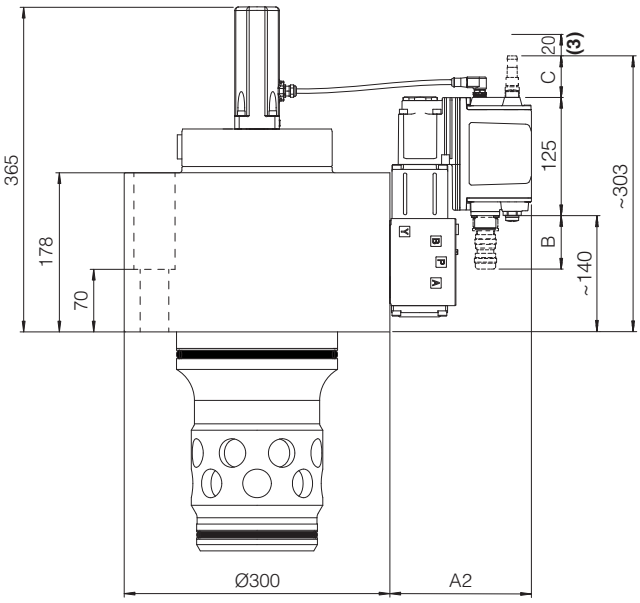

LIQZP	A1	A2	B (1)	C (2)
LEB - SN - IL	140	150	60	-
LEB - SN - NP	140	150	60	-
LES - SN - NP, BC, BP, EH	140	150	60	58
LES - SN - EW, EI, EP	155	165	60	58

(1) The indicated dimension refers to the main connector ZM-7P. See section 22 for main connectors installation dimensions
(2) The indicated dimension refers to the longer connectors or Bluetooth adapter
For dimensions of connectors and Bluetooth adapter, see sections 18.5, 18.6 and 18.7
(3) Space required for connection cable and for connector removal

Note: for mounting surface and cavity dimensions, see table P006

LIQZP-LEB-*-1252
LIQZP-LES-*-1252

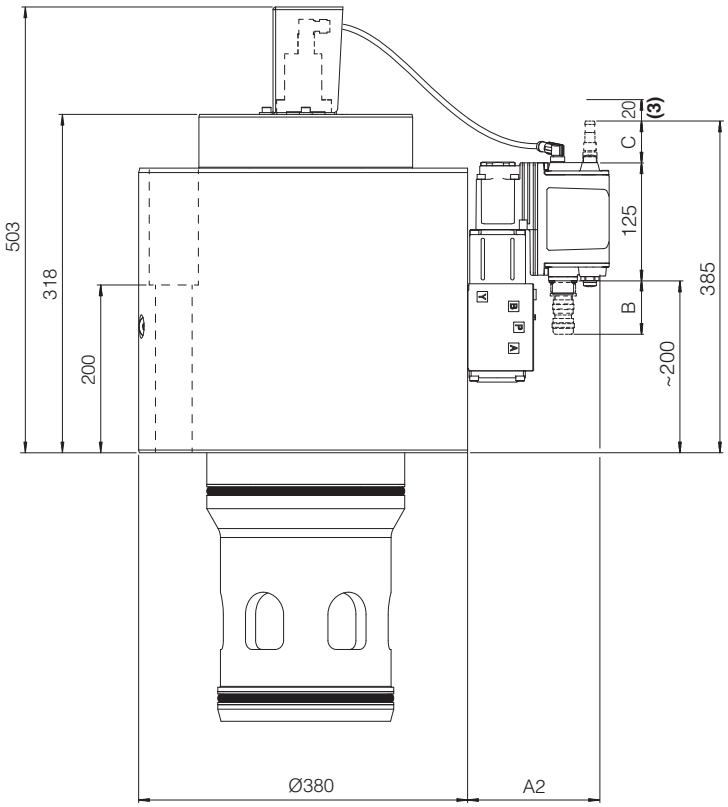

LIQZP	A2	B (1)	C (2)
LEB - SN - IL	140	60	-
LEB - SN - NP	140	60	-
LES - SN - NP, BC, BP, EH	140	60	58
LES - SN - EW, EI, EP	155	60	58

(1) The indicated dimension refers to the main connector ZM-7P. See section 22 for main connectors installation dimensions
(2) The indicated dimension refers to the longer connectors or Bluetooth adapter
For dimensions of connectors and Bluetooth adapter, see sections 18.5, 18.6 and 18.7
(3) Space required for connection cable and for connector removal

Note: for mounting surface and cavity dimensions, see table P006

24 RELATED DOCUMENTATION

FS001	Basics for digital electrohydraulics	**P006**	Mounting surfaces and cavities for cartridge valves
FS900	Operating and maintenance information for proportional valves	**QB340**	Quickstart for LEB valves commissioning
GS500	Programming tools	**QF340**	Quickstart for LES valves commissioning
GS510	Fieldbus	**E-MAN-RI-LEB**	TEB/LEB user manual
GS520	IO-Link interface	**E-MAN-RI-LES**	TES/LES user manual
K800	Electric and electronic connectors		

Proportional 2-way cartridges high performance

piloted, with two LVDT transducers, ISO 7368 sizes from 16 to 125

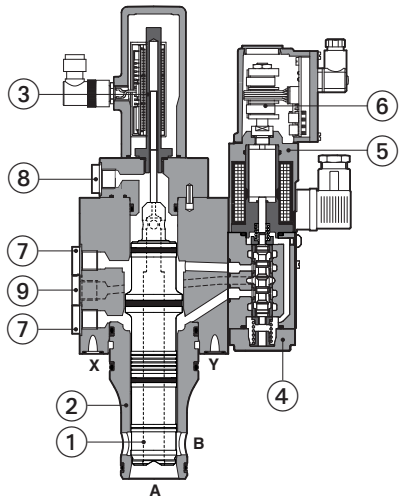

① Poppet
② Sleeve
③ Main stage LVDT transducer
④ Pilot valve
⑤ Proportional solenoid
⑥ Pilot valve LVDT transducer
⑦ Air bleeding
⑧ Air suction port
⑨ X1 port (external pilot pressure)

LIQZP-L-322L4

LIQZP-L

High performance 2-way proportional cartridge valves specifically designed for high speed closed loop controls.

The valves operate in association with digital off-board divers, see section 2.

They are equipped with two LVDT position transducers for best dynamics in not compensated flow regulations.

The cartridge execution for blocks installation grants high flow capabilities and minimized pressure drops.

Spool regulation characteristics: L = linear

LIQZP: Size: **16** ÷ **125** - ISO 7368
Max flow: **600** ÷ **22000 l/min**
Max pressure: **420 bar**

1 MODEL CODE

LIQZP	-	L	-	32	2	L4	/	*	/	*

Proportional 2-way cartridge, piloted

L = two LVDT transducers

Valve size ISO 7368, see section 4 :

size	**16**	**25**	**32**	**40**	
l/min	250	500	800	1200	
size	**50**	**63**	**80**	**100**	**125**
l/min	2000	3000	4500	7200	9350

Nominal flow (l/min) at Δp 5 bar

Configuration: **2** = 2 way

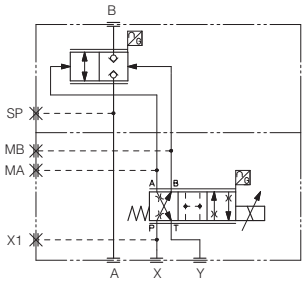

functional symbol

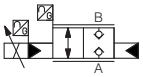

simplified symbol

Series number

Seals material,
see section 6 :

- = NBR
PE = FKM
BT = NBR low temperature

Spool type, regulating characteristics:

L4 = linear

2 OFF-BOARD ELECTRONIC DRIVERS

Please include in the driver order also the complete code of the connected proportional valve.

Drivers model	E-BM-LEB	E-BM-LES
Type	digital	digital
Format	DIN-rail panel	DIN-rail panel
Tech table	GS230	GS240

WARNING

To avoid overheating and possible damage of the electronic driver, the valves must be never energized without hydraulic supply to the pilot stage.
In case of prolonged pauses of the valve operation during the machine cycle, it is always advisable to disable the driver.

3 GENERAL CHARACTERISTICS

Assembly position	Any position
Subplate surface finishing to ISO 4401	Acceptable roughness index: Ra ≤0,8, recommended Ra 0,4 – Flatness ratio 0,01/100
MTTFd valves according to EN ISO 13849	75 years, for futher details see technical table P007
Ambient temperature range	**Standard** = -20°C ÷ +60°C **/PE** option = -20°C ÷ +60°C **/BT** option = -40°C ÷ +60°C
Storage temperature range	**Standard** = -20°C ÷ +70°C **/PE** option = -20°C ÷ +70°C **/BT** option = -40°C ÷ +70°C
Surface protection	Zinc coating with black passivation, galvanic treatment (driver housing)
Corrosion resistance	Salt spray test (EN ISO 9227) > 200 h
Vibration resistance	See technical table G004
Compliance	CE according to EMC directive 2014/30/EU (Immunity: EN 61000-6-2; Emission: EN 61000-6-3) RoHS Directive 2011/65/EU as last update by 2015/863/EU REACH Regulation (EC) n°1907/2006

4 HYDRAULIC CHARACTERISTICS - based on mineral oil ISO VG 46 at 50 °C

Size	**16**	**25**	**32**	**40**	**50**	**63**	**80**	**100**	**125**
Nominal flow Δp A-B [l/min]									
Δp = 5 bar	250	500	800	1200	2000	3000	4500	7200	9350
Δp = 10 bar	350	700	1100	1700	2800	4250	6350	10200	13200
Max permissible flow	600	1200	1800	2500	4000	6000	10000	16000	22000
Max pressure [bar]	Ports A, B = **420** X = 350 Y ≤ 10								
Nominal flow of pilot valve at Δp = 70 bar [l/min]	4	8	20	40	40	100	100	100	100
Leakage of pilot valve at P = 100 bar [l/min]	0,2	0,2	0,3	0,7	0,7	1	1	1	1
Piloting pressure [bar]	min: 40% of system pressure max 350 recommended 140 ÷ 160								
Piloting volume [cm^3]	1,6	2,2	7,0	9,4	17,7	32,5	39,5	49,5	124,9
Piloting flow **(1)** [l/min]	4	5,3	14	19	35,5	56	60	60	88,1
Response time 0 ÷ 100% step signal **(2)** [ms]	24	25	28	30	30	35	40	50	90
Hysteresis [% of the max regulation]	≤ 0,1								
Repeatability [% of the max regulation]	± 0,1								
Thermal drift	zero point displacement < 1% at ΔT = 40°C								

(1) With step reference input 0÷100%
(2) With pilot pressure = 140 bar, see datailed diagrams in section 7.2

WARNING

The loss of the pilot pressure causes the undefined position of the main spool.
The sudden interruption of the power supply during the valve operation causes the immediate shut-off of the main poppet.
This could cause pressure surges in the hydraulic system or high decelerations which may lead to machine damages.

5 ELECTRICAL CHARACTERISTICS

Max power consumption	30 W
Max. solenoid current	2,6 A
Coil resistance R at 20°C	3 ÷ 3,3 Ω
Insulation class	H (180°) Due to the occuring surface temperatures of the solenoid coils, the European standards ISO 13732-1 and EN982 must be taken into account
Protection degree to DIN EN60529	IP65 with mating connectors
Duty factor	Continuous rating (ED=100%)

6 SEALS AND HYDRAULIC FLUIDS - for other fluids not included in below table, consult our technical office

Seals, recommended fluid temperature	NBR seals (standard) = -20°C ÷ +60°C, with HFC hydraulic fluids = -20°C ÷ +50°C FKM seals (/PE option) = -20°C ÷ +80°C NBR low temp. seals (/BT option) = -40°C ÷ +60°C, with HFC hydraulic fluids = -20°C ÷ +50°C		
Recommended viscosity	20÷100 mm²/s - max allowed range 15 ÷ 380 mm²/s		
Max fluid contamination level — normal operation	ISO4406 class 18/16/13 NAS1638 class 7		see also filter section at www.atos.com or KTF catalog
Max fluid contamination level — longer life	ISO4406 class 16/14/11 NAS1638 class 5		
Hydraulic fluid	**Suitable seals type**	**Classification**	**Ref. Standard**
Mineral oils	NBR, FKM, NBR low temp.	HL, HLP, HLPD, HVLP, HVLPD	DIN 51524
Flame resistant without water	FKM	HFDU, HFDR	ISO 12922
Flame resistant with water	NBR, NBR low temp.	HFC	

7 DIAGRAMS (based on mineral oil ISO VG 46 at 50 °C)

7.1 Regulation diagrams (values measured at Dp 5 bar)

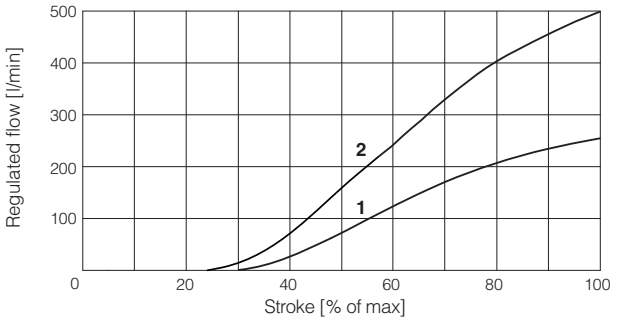

1 = LIQZP-L-162L4
2 = LIQZP-L-252L4

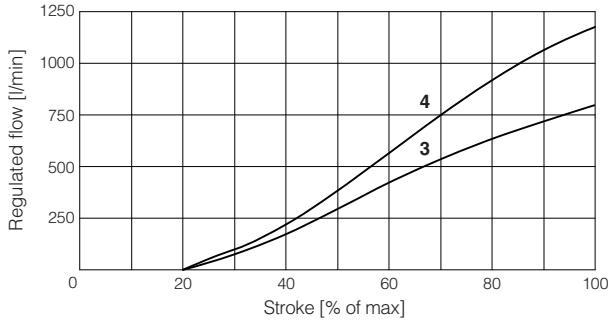

3 = LIQZP-L-322L4
4 = LIQZP-L-402L4

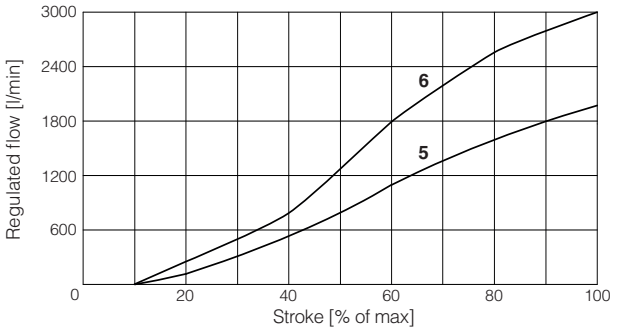

5 = LIQZP-L-502L4
6 = LIQZP-L-632L4

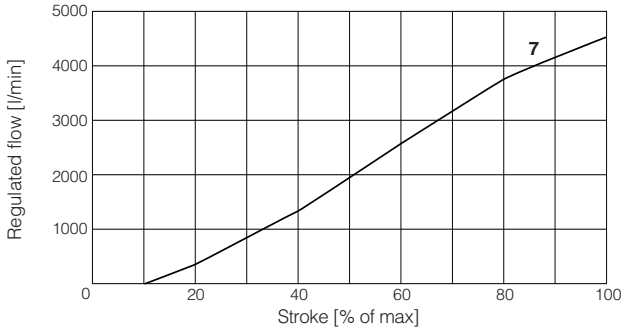

7 = LIQZP-L-802L4

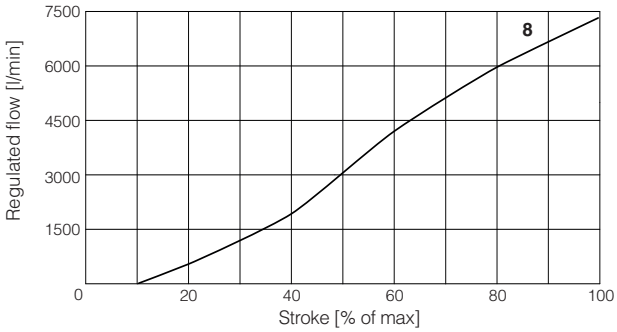

8 = LIQZP-L-1002L4

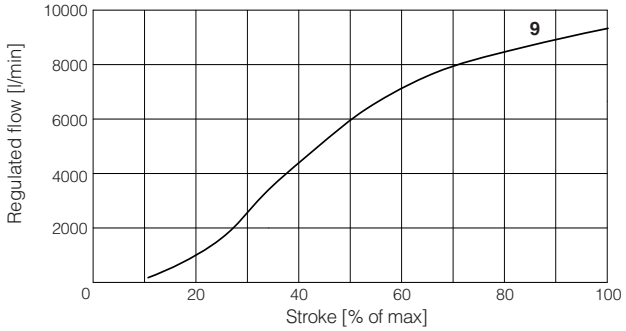

9 = LIQZP-L-1252L4

7.2 Response time

The response times in below diagrams are measured at different steps of the reference input signal. They have to be considered as average values. For the valves with digital electronics the dynamics performances can be optimized by setting the internal software parameters.

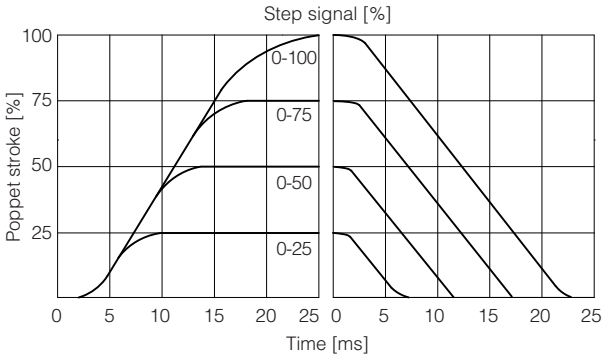

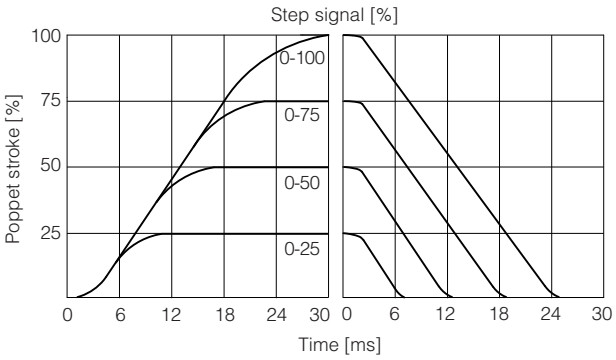

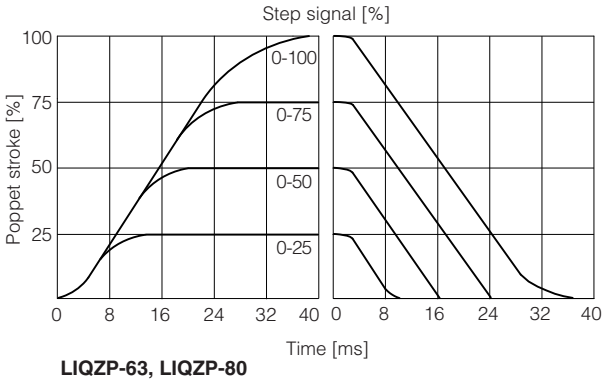

LIQZP-63, LIQZP-80

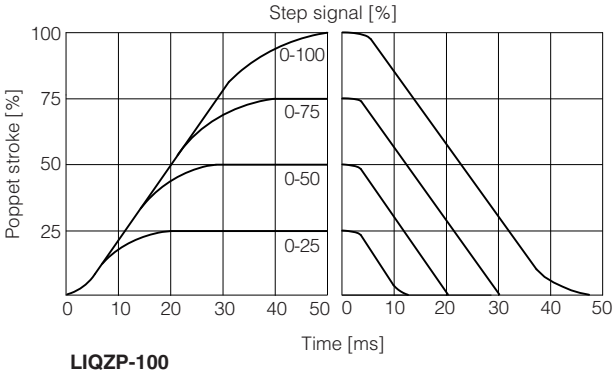

LIQZP-100

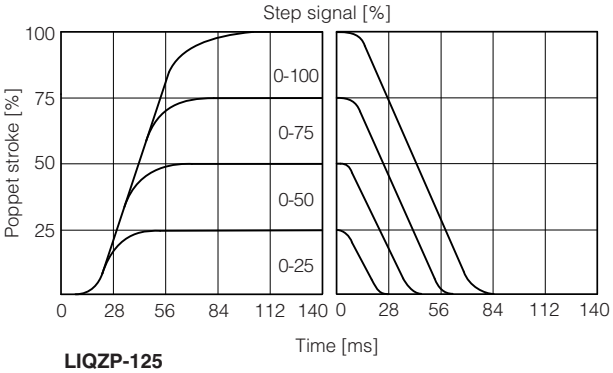

LIQZP-125

7.3 **Bode diagrams** - stated at nominal hydraulic conditions

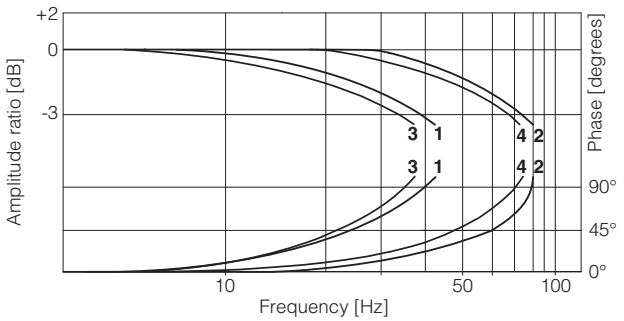

1 = LIQZP-L-162L4: 10% ↔ 90%
2 = LIQZP-L-162L4: 50% ± 5%
3 = LIQZP-L-252L4: 10% ↔ 90%
4 = LIQZP-L-252L4: 50% ± 5%

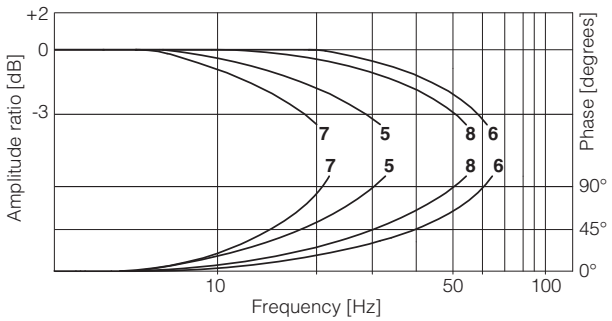

5 = LIQZP-L-322L4: 10% ↔ 90%
6 = LIQZP-L-322L4: 50% ± 5%
7 = LIQZP-L-402L4: 10% ↔ 90%
8 = LIQZP-L-402L4: 50% ± 5%

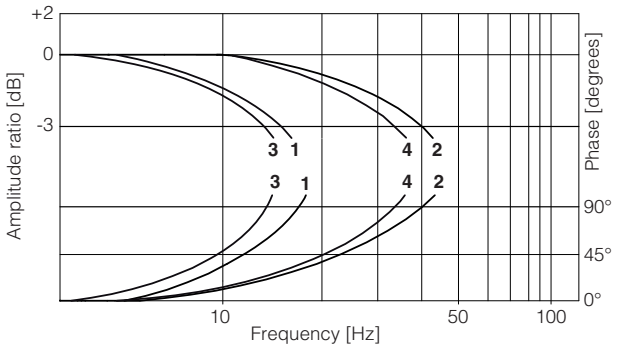

1 = LIQZP-L-502L4: 10% ↔ 90%
2 = LIQZP-L-502L4: 50% ± 5%
3 = LIQZP-L-632L4: 10% ↔ 90%
4 = LIQZP-L-632L4: 50% ± 5%

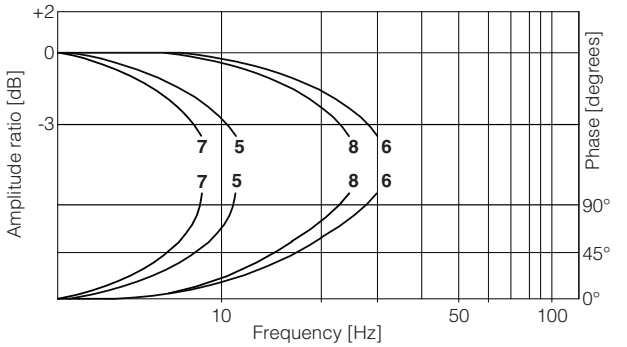

5 = LIQZP-L-802L4: 10% ↔ 90%
6 = LIQZP-L-802L4: 50% ± 5%
7 = LIQZP-L-1002L4: 10% ↔ 90%, LIQZP-L-1252L4: 50% ± 5%
8 = LIQZP-L-1002L4: 50% ± 5%
9 = LIQZP-L-1252L4: 50% ± 5%

8 **ELECTRICAL CONNECTION** - connectors supplied with the valve

8.1 Solenoid connector

PIN	SIGNAL	TECHNICAL SPECIFICATION	Connector code 666
1	**COIL**	Power supply	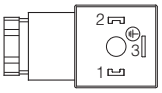
2	**COIL**	Power supply	
3	**GND**	Ground	

8.2 LVDT pilot transducer connector

PIN	SIGNAL	TECHNICAL SPECIFICATION	Connector code 345
1	**TR**	Output signal	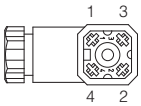
2	**VT-**	Power supply -15VDC	
3	**VT+**	Power supply +15VDC	
4	**GND**	Ground	

8.3 LVDT main stage transducer connector - for size 16 ÷ 100

PIN	SIGNAL	TECHNICAL SPECIFICATION	Connector code ZBE-08
1	**PROG**	Do not connect	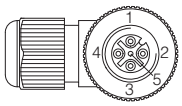
2	**VT+**	Power supply +15VDC	
3	**AGND**	Ground	
4	**TR**	Output signal	
5	**VT-**	Power supply -15VDC	

8.4 LVDT main stage transducer connector - for size 125

PIN	SIGNAL	TECHNICAL SPECIFICATION	Connector code STCO9131-6-PG9
1	**TR**	Output signal	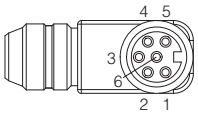
2	**AGND**	Ground	
3	**NC**	Do not connect	
4	**NC**	Do not connect	
5	**VT+**	Power supply 24VDC	
6	**VT-**	Power supply 0VDC	

9 AIR BLEEDING

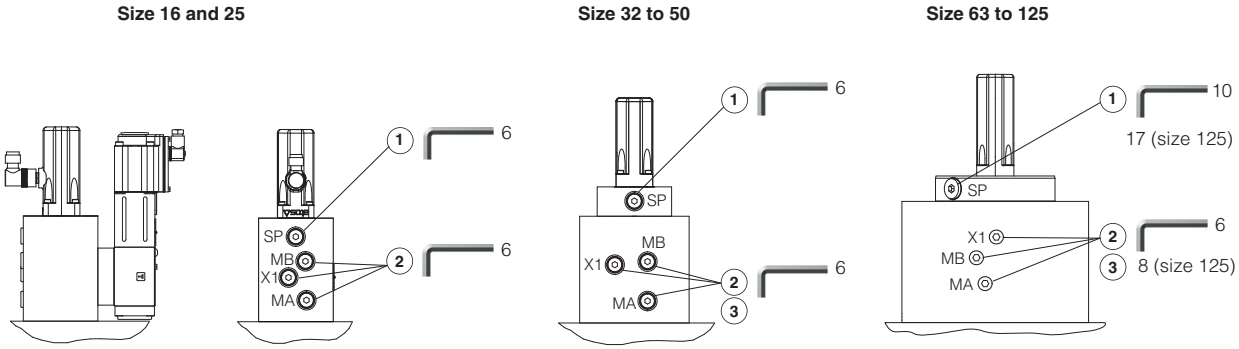

(1) **Air suction port (SP):**

N° 1 plug G1/4” for sizes 16 to 50
N° 1 plug G1/2” for sizes 63 to 100
N° 1 plug G1” for size 125

To be used only in case port A is connected to tank and subjected to negative pressure, consult our technical office.

(2) **Air bleeding (MA, MB) and external pilot pressure (X1):**

N° 3 plugs G1/4” for sizes 16 to 100

N° 3 plugs G3/8” for size 125

At the machine commissioning it is advisable to bleed the air from piloting chambers, by loosening the 2 plugs shown in the picture.

Operate the valve for few seconds at low pressure and then lock the plugs.

(3) **External pilot pressure (X1):**

N° 1 plugs G1/4” for sizes 16 to 100

N° 1 plugs G3/8” for size 125

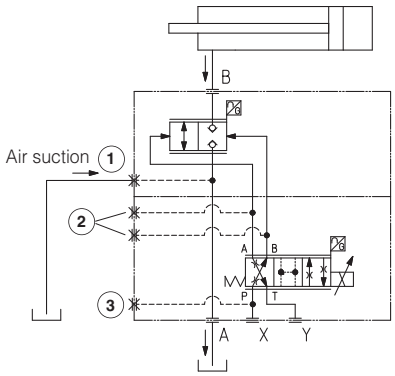

10 FASTENING BOLTS AND VALVE MASS

Type	Size	Fastening bolts (1)	Mass [kg]
LIQZP	16	4 socket head screws M8x90 class 12.9 Tightening torque = 35 Nm	5,6
	25	4 socket head screws M12x100 class 12.9 Tightening torque = 125 Nm	8,2
	32	4 socket head screws M16x60 class 12.9 Tightening torque = 300 Nm	10,9
	40	4 socket head screws M20x70 class 12.9 Tightening torque = 600 Nm	16,7
	50	4 socket head screws M20x80 class 12.9 Tightening torque = 600 Nm	23,9
	63	4 socket head screws M30x120 class 12.9 Tightening torque = 2100 Nm	44,0
	80	8 socket head screws M24x80 class 12.9 Tightening torque = 1000 Nm	71,6
	100	8 socket head screws M30x120 class 12.9 Tightening torque = 2100 Nm	122,5
	125	8 socket head screws M36x260 class 12.9 Tightening torque = 3600 Nm	375

(1) Fastening bolts supplied with the valve

11 INSTALLATION DIMENSIONS [mm]

LIQZP-L-162

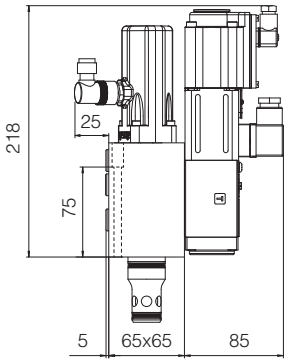

LIQZP-L-252

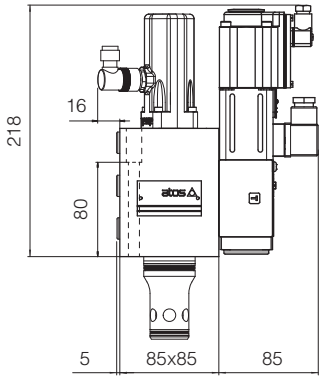

LIQZP-L-322

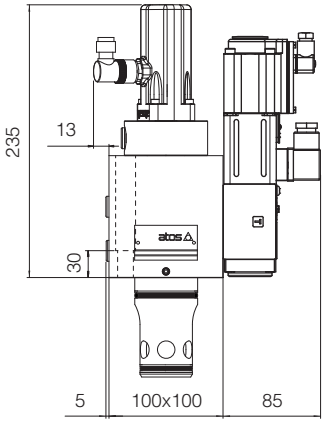

LIQZP-L-402

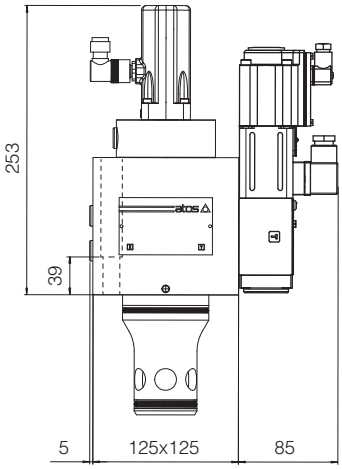

LIQZP-L-502

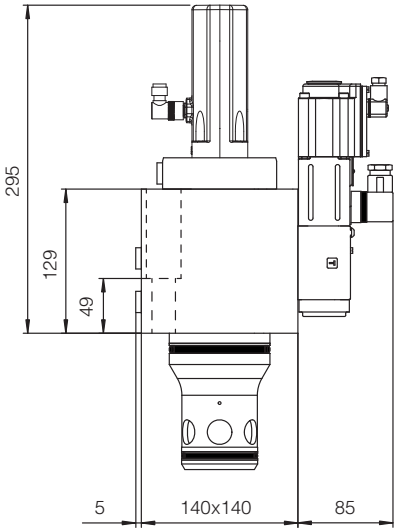

LIQZP-L-632

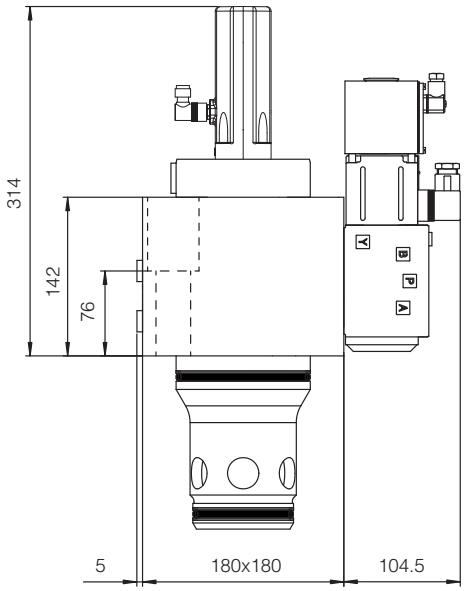

Note: for mounting surface and cavity dimensions, see table P006

LIQZP-L-802

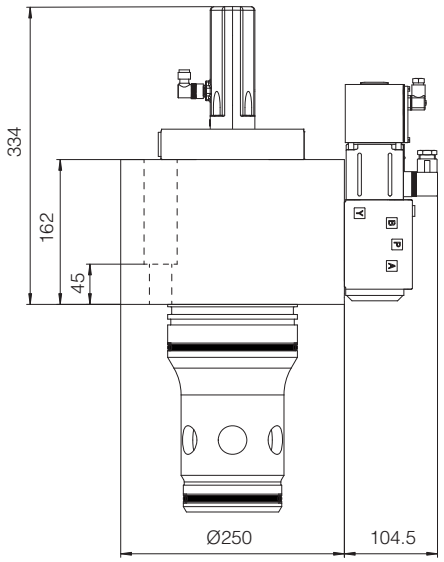

LIQZP-L-1002

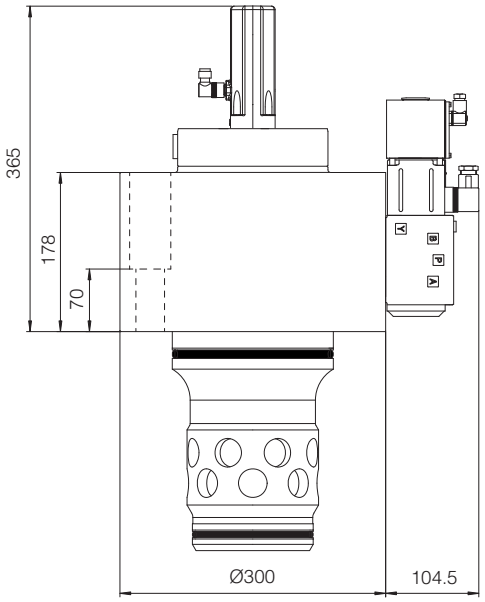

LIQZP-L-1252

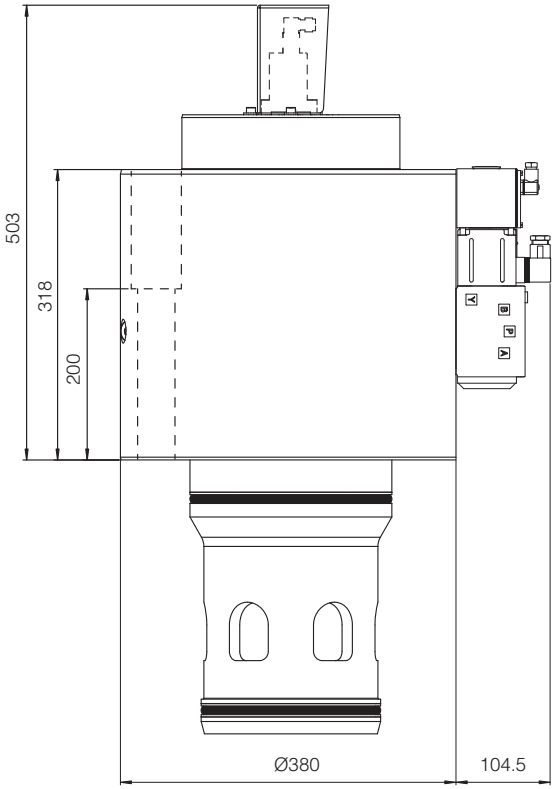

Note: for mounting surface and cavity dimensions, see table P006

12 RELATED DOCUMENTATION

FS001	Basics for digital electrohydraulics	**GS500**	Programming tools
FS900	Operating and maintenance information for proportional valves	**GS510**	Fieldbus
GS230	E-BM-LEB digital driver	**K800**	Electric and electronic connectors
GS240	E-BM-LES digital driver	**P006**	Mounting surfaces and cavities for cartridge valves

Digital servoproportional 2-way cartridges high response

piloted, with on-board driver and two LVDT transducers

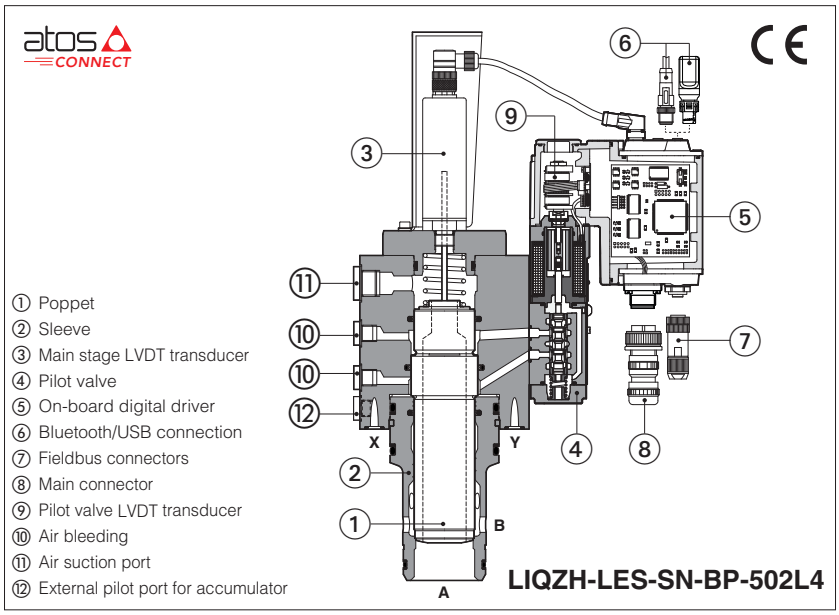

LIQZH-LEB, LIQZH-LES

High response 2-way servoproportional cartridge valves specifically designed for high flow applications requiring maximum dynamics and accurate control. Typical applications are die casting and fast forging presses. They are equipped with two LVDT position transducers for best dynamics in not compensated flow regulations. The cartridge execution for blocks installation grants high flow capabilities and minimized pressure drops.

LEB basic execution with analog reference signal or IO-Link interface for digital reference signals, valve settings, and real-time diagnostics.

LES full execution which includes also optional fieldbus interfaces for digital reference signals, valve settings, and real-time diagnostics.

Bluetooth/USB connection is always present for valve settings via mobile App and Atos PC software.

Size: **32** ÷ **100** - ISO 7368
Max flow: **1800** ÷ **16000 l/min**
Max pressure: **420 bar**

1 MODEL CODE

LIQZH	-	LES	-	SN	-	NP	-	40	2	L4	/	*	/	*	*	/	*

Servoproportional 2-way cartridge, piloted, high response

LEB = basic on-board digital driver
LES = full on-board digital driver

Alternated p/Q controls:
SN = none

IO-Link interface, only for LEB, see section 5 :
NP = Not present **IL** = IO-Link

Fieldbus interfaces, only for LES, see section 6 :
NP = Not present
BC = CANopen **EW** = POWERLINK
BP = PROFIBUS DP **EI** = EtherNet/IP
EH = EtherCAT **EP** = PROFINET RT/IRT

Valve size ISO 7368, see section 7 :

size	32	40	50
l/min	800	1200	2000
size	63	80	100
l/min	3000	4500	7200

Nominal flow (l/min) at Δp 5 bar

Configuration:
2 = 2 way

functional symbol

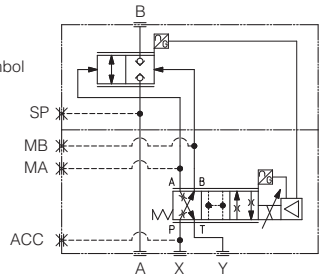

simplified symbol

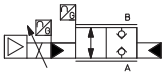

L4 = linear

Poppet type, regulating characteristics, see section 11 :

F = fault signal
I = current reference input and monitor 4 ÷ 20 mA
Q = enable signal
Z = double power supply (only for LES), enable, fault and monitor signals - 12 pin connector

Electronic options (1), not available for LEB-SN-IL:

T = Bluetooth adapter supplied with the valve

Bluetooth option (1), see section 4 :

Series number:
2*

Seals material, see section 10 :
- = NBR
PE = FKM
BT = NBR low temperature

(1) Possible combined options: /FI, /IQ, /IZ (/T Bluetooth adapter option can be combined with all other options)

2 GENERAL NOTES

Atos digital proportionals valves are CE marked according to the applicable directives (e.g. Immunity and Emission EMC Directive).
Installation, wirings and start-up procedures must be performed according to the general prescriptions shown in tech table **FS900** and in the user manuals included in the E-SW-SETUP programming software.

WARNING

To avoid overheating and possible damage of the electronic driver, the valves must be never energized without hydraulic supply to the pilot stage.
In case of prolonged pauses of the valve operation during the machine cycle, it is always advisable to disable the driver (option /Q or /Z).
A safety fuse 2,5 A installed on 24VDC power supply of each valve is always recommended, see also power supply note at sections 15 .

WARNING

The loss of the pilot pressure causes the undefined position of the main poppet.
The sudden interruption of the power supply during the valve operation causes the immediate shut-off of the main poppet.
This could cause pressure surges in the hydraulic system or high decelerations which may lead to machine damages.

3 VALVE SETTINGS AND PROGRAMMING TOOLS - see tech. table **GS500**

3.1 Atos CONNECT mobile App

Free downloadable App for smartphones and tablets which allows quick access to valve main functional parameters and basic diagnostic information via Bluetooth, thus avoiding physical cable connection and significantly reducing commissioning time.
Atos CONNECT supports Atos digital valve drivers equipped with E-A-BTH adapter or with built-in Bluetooth. It does not support valves with p/Q control or axis controls.

Download on the App Store

GET IT ON Google Play

3.2 E-SW-SETUP PC software

Free downloadable software for PC allows to set all valve functional parameters and to access complete diagnostic information of digital valve drivers via Bluetooth/USB service port.
Atos E-SW-SETUP PC software supports all Atos digital valve drivers and it is available at www.atos.com in MyAtos area.

WARNING: drivers USB port is not isolated! For E-C-SB-USB/M12 cable, the use of E-A-SB-USB/OPT isolator adapter is highly recommended for PC protection

Bluetooth or USB connection

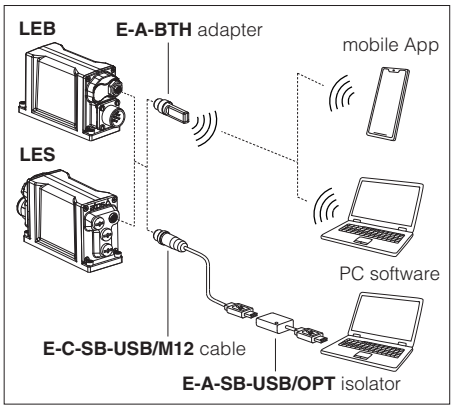

4 BLUETOOTH OPTION - see tech. table **GS500**

T option adds Bluetooth® connectivity to Atos valve drivers thanks to E-A-BTH adapter, which can be left permanently installed on-board, to allow the Bluetooth connection with the valve drivers at any time. E-A-BTH adapter can also be purchased separately and used to connect with any supported Atos digital product.
Bluetooth connection to the valve can be protected against unauthorised access by setting a personal password. The adapter leds visually indicates the status of valve driver and Bluetooth connection.

WARNING: for the list of countries where the Bluetooth adapter has been approved, see tech. table **GS500**
T option is not available for the Indian market, so the Bluetooth adapter must be ordered separately.

5 IO-LINK - only for **LEB**, see tech. table **GS520**

IO-Link allows low cost digital communication between the valve and machine central unit. The valve is directly connected to a port of an IO-Link master (point-to-point connection) via low-cost unshielded cables for digital reference, diagnostic and settings. The IO-Link master works as a hub exchanging this information with the machine central unit via fieldbus.

6 FIELDBUS - only for **LES**, see tech. table **GS510**

Fieldbus allows valve direct communication with machine control unit for digital reference, valve diagnostics and settings. These execution allow to operate the valves through fieldbus or analog signals available on the main connector.

7 GENERAL CHARACTERISTICS

Assembly position	Any position
Subplate surface finishing to ISO 4401	Acceptable roughness index: Ra ≤0,8, recommended Ra 0,4 – Flatness ratio 0,01/100
MTTFd valves according to EN ISO 13849	75 years, for further details see technical table P007
Ambient temperature range	**Standard** = -20°C ÷ +60°C **/PE** option = -20°C ÷ +60°C **/BT** option = -40°C ÷ +60°C
Storage temperature range	**Standard** = -20°C ÷ +70°C **/PE** option = -20°C ÷ +70°C **/BT** option = -40°C ÷ +70°C
Surface protection	Zinc coating with black passivation, galvanic treatment (driver housing)
Corrosion resistance	Salt spray test (EN ISO 9227) > 200 h
Vibration resistance	See technical table G004
Compliance	CE according to EMC directive 2014/30/EU (Immunity: EN 61000-6-2; Emission: EN 61000-6-3) RoHS Directive 2011/65/EU as last update by 2015/863/EU REACH Regulation (EC) n°1907/2006

8 HYDRAULIC CHARACTERISTICS - based on mineral oil ISO VG 46 at 50 °C

Size		32	40	50	63	80	100
Max regulated flow [l/min]							
Δp A-B	at Δp = 5 bar	800	1200	2000	3000	4500	7200
	at Δp = 10 bar	1100	1700	2800	4250	6350	10200
Max permissible flow		1800	2500	4000	6000	10000	16000
Max pressure [bar]		Ports A, B = 420 X = 350 Y ≤ 10					
Nominal flow of pilot valve at Δp = 70 bar [l/min]		20	40	40	100	100	100
Leakage of pilot valve at P = 100 bar [l/min]		0,3	0,7	0,7	1	1	1
Piloting pressure [bar]		min: 40% of system pressure max 350 recommended 140 ÷ 160					
Piloting volume [cm³]		3,31	5,34	7,42	10,28	19,55	22,53
Piloting flow **(1)** [l/min]		13,2	17,8	22,3	31	39	45
Response time 0 ÷ 100% step signal **(2)** [ms]		15	18	20	24	30	37
Hysteresis [% of the max regulation]		≤ 0,1					
Repeatability [% of the max regulation]		± 0,1					
Thermal drift		zero point displacement < 1% at ΔT = 40°C					

(1) With step reference input 0÷100% **(2)** With pilot pressure = 140 bar, see datailed diagrams in section 11.2

9 ELECTRICAL CHARACTERISTICS

Power supplies	Nominal : +24 VDC Rectified and filtered : VRMS = 20 ÷ 32 VMAX (ripple max 10 % VPP)				
Max power consumption	50 W				
Max. solenoid current	2,6 A				
Coil resistance R at 20°C	3 ÷ 3,3 Ω				
Analog input signals	Voltage: range ±10 VDC (24 VMAX tolerant) Input impedance: Ri > 50 kΩ Current: range ±20 mA Input impedance: Ri = 500 Ω				
Monitor outputs	Output range: voltage ±10 VDC @ max 5 mA current ±20 mA @ max 500 Ω load resistance				
Enable input	Range: 0 ÷ 5 VDC (OFF state), 9 ÷ 24 VDC (ON state), 5 ÷ 9 VDC (not accepted); Input impedance: Ri > 10 kΩ				
Fault output	Output range: 0 ÷ 24 VDC (ON state > [power supply - 2 V] ; OFF state < 1 V) @ max 50 mA; external negative voltage not allowed (e.g. due to inductive loads)				
Alarms	Solenoid not connected/short circuit, cable break with current reference signal, over/under temperature, valve spool transducer malfunctions, alarms history storage function				
Insulation class	H (180°) Due to the occurring surface temperatures of the solenoid coils, the European standards ISO 13732-1 and EN982 must be taken into account				
Protection degree to DIN EN60529	IP66 / IP67 with mating connectors				
Duty factor	Continuous rating (ED=100%)				
Tropicalization	Tropical coating on electronics PCB				
Additional characteristics	Short circuit protection of solenoid's current supply; 3 leds for diagnostic (only for LES); poppet position control by P.I.D. with rapid solenoid switching; protection against reverse polarity of power supply				
Communication interface	USB Atos ASCII coding	IO-Link Interface and System Specification 1.1.3	CANopen EN50325-4 + DS408	PROFIBUS DP EN50170-2/IEC61158	EtherCAT POWERLINK EtherNet/IP PROFINET IO RT/IRT IEC 61158
Communication physical layer	not insulated USB 2.0+USB OTG	SDCI class port B	optical insulated CAN ISO11898	optical insulated RS485	Fast Ethernet, insulated 100 Base TX
Recommended wiring cable	LiYCY shielded cables, see section 19				

Note: a maximum time of 800 ms (depending on communication type) has to be considered between the driver energizing with the 24 VDC power supply and when the valve is ready to operate. During this time the current to the valve coils is switched to zero.

10 SEALS AND HYDRAULIC FLUIDS - for other fluids not included in below table, consult our technical office

Seals, recommended fluid temperature		NBR seals (standard) = -20°C ÷ +60°C, with HFC hydraulic fluids = -20°C ÷ +50°C FKM seals (/PE option) = -20°C ÷ +80°C NBR low temp. seals (/BT option) = -40°C ÷ +60°C, with HFC hydraulic fluids = -20°C ÷ +50°C		
Recommended viscosity		20÷100 mm²/s - max allowed range 15 ÷ 380 mm²/s		
Max fluid contamination level	normal operation	ISO4406 class 18/16/13 NAS1638 class 7		see also filter section at www.atos.com or KTF catalog
	longer life	ISO4406 class 16/14/11 NAS1638 class 5		
Hydraulic fluid		**Suitable seals type**	**Classification**	**Ref. Standard**
Mineral oils		NBR, FKM, NBR low temp.	HL, HLP, HLPD, HVLP, HVLPD	DIN 51524
Flame resistant without water		FKM	HFDU, HFDR	ISO 12922
Flame resistant with water		NBR, NBR low temp.	HFC	

11 DIAGRAMS (based on mineral oil ISO VG 46 at 50 °C)

11.1 Regulation diagrams (values measured at Δp 5 bar)

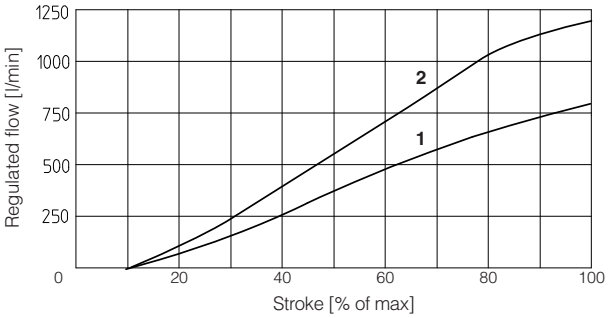

1 = LIQZH-L*-32*
2 = LIQZH-L*-40*

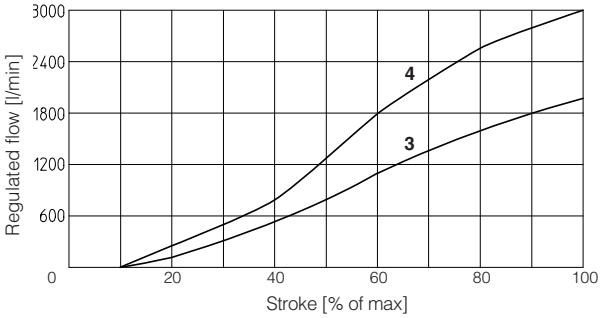

3 = LIQZH-L*-50*
4 = LIQZH-L*-63*

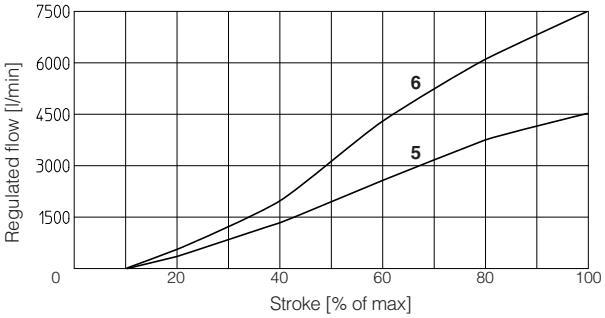

5 = LIQZH-L*-80*
6 = LIQZH-L*-100*

11.2 Response time

The response times in below diagrams are measured at different steps of the reference input signal. They have to be considered as average values. For the valves with digital electronics the dynamics performances can be optimized by setting the internal software parameters.

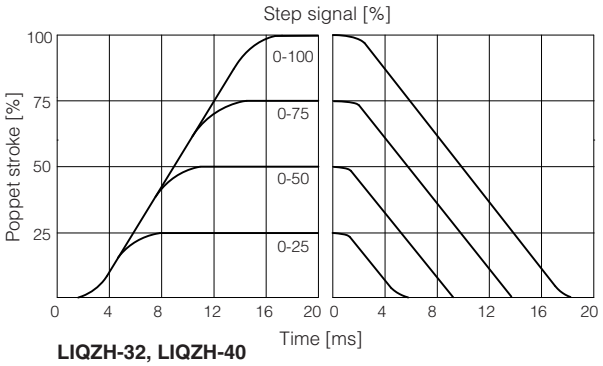

LIQZH-32, LIQZH-40

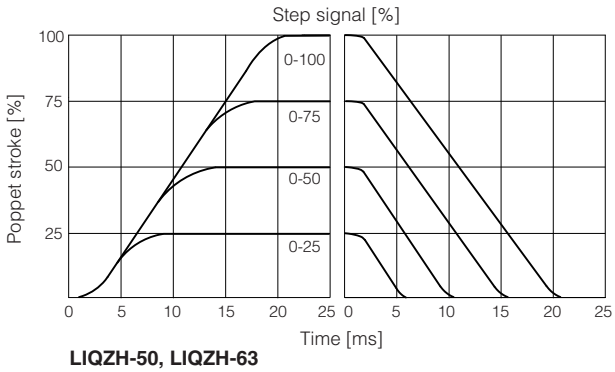

LIQZH-50, LIQZH-63

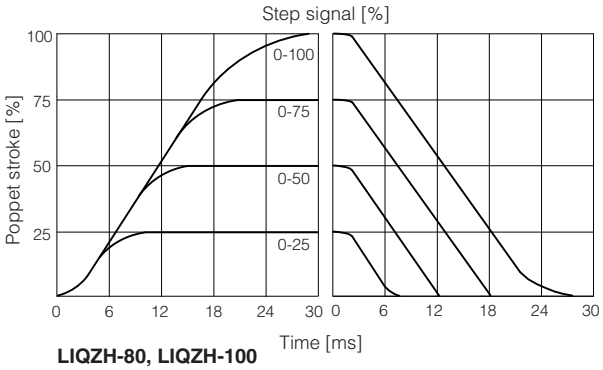

LIQZH-80, LIQZH-100

11.3 Bode diagrams - stated at nominal hydraulic conditions

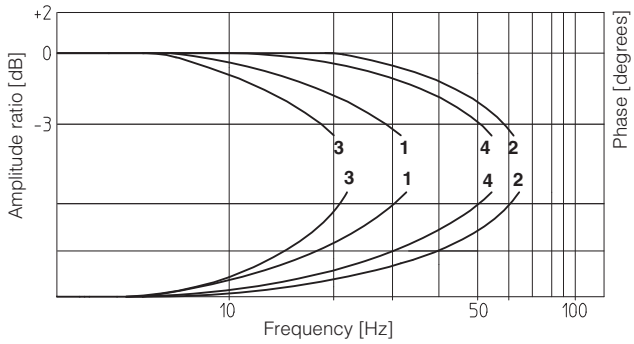

1 = LIQZH-L*-32*: 10% ↔ 90% **3** = LIQZH-L*-40*: 10% ↔ 90%
2 = LIQZH-L*-32*: 50% ± 5% **4** = LIQZH-L*-40*: 50% ± 5%

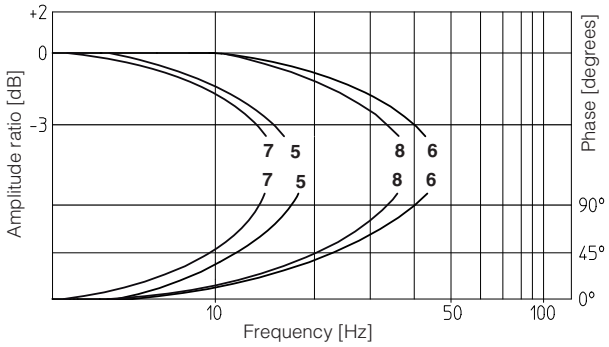

5 = LIQZH-L*-50*: 10% ↔ 90% **7** = LIQZH-L*-63*: 10% ↔ 90%
6 = LIQZH-L*-50*: 50% ± 5% **8** = LIQZH-L*-63*: 50% ± 5%

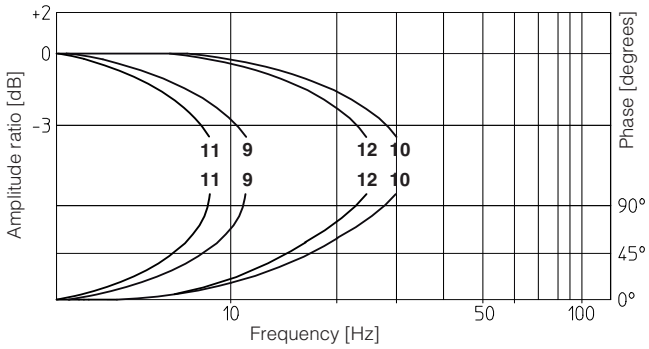

9 = LIQZH-L*-80*: 10% ↔ 90% **11** = LIQZH-L*-100*: 10% ↔ 90%
10 = LIQZH-L*-80*: 50% ± 5% **12** = LIQZH-L*-100*: 50% ± 5%

12 ELECTRONIC OPTIONS - not available for **LEB-SN-IL**

F = This option permits to monitor the eventual fault condition of the driver, as for example the solenoid short circuit/not connected, reference signal cable broken for option /I, poppet position transducer broken, etc. - see 15.7 for signal specifications.

I = This option provides 4 ÷ 20 mA current reference and monitor signals, instead of the standard 0 ÷ 10 VDC.
Input signal can be reconfigured via software selecting between voltage and current, within a maximum range of ±10 VDC or ±20 mA.
It is normally used in case of long distance between the machine control unit and the valve or where the reference signal can be affected by electrical noise; the valve functioning is disabled in case of reference signal cable breakage.

Q = This option permits to inhibit the valve function without removing the power supply to the driver. Upon disable command the current to the solenoid is zeroed and the valve's poppet moves to rest position.
The option /Q is suggested for all cases where the valve has to be frequently inhibited during the machine cycle – see 15.5 for signal specifications.

Z = This option provides, on the 12 pin main connector, the following additional features:
Fault output signal - see above option **/F**
Enable input signal - see above option **/Q**
Repeat enable output signal - only for **LEB-SN-NP** (see 15.6)
Power supply for driver's logics and communication - only for **LES** (see 15.2)

13 POSSIBLE COMBINED OPTIONS

/FI, /IQ, /IZ

Note: **/T** Bluetooth adapter option can be combined with all other options

14 AIR BLEEDING

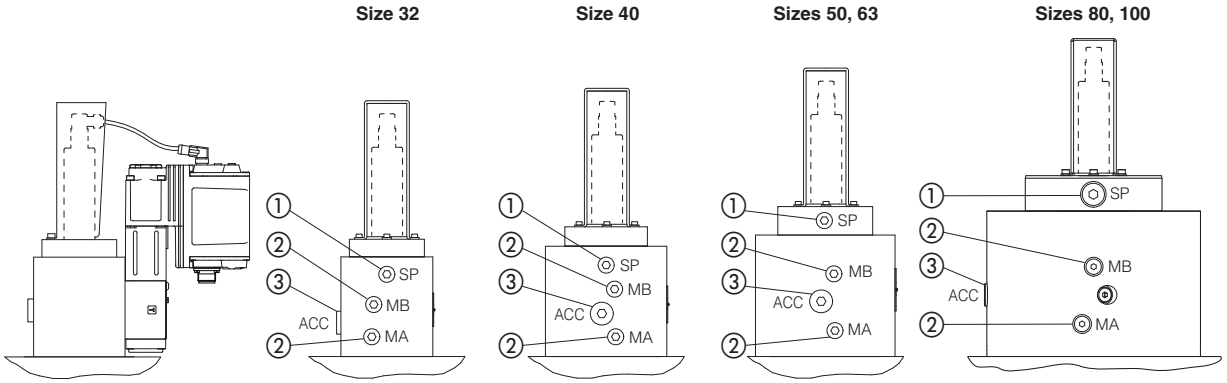

① To be used only in case port A is connected to tank and subjected to negative pressure, consult our technical office.

② At the machine commissioning it is advisable to bleed the air from piloting chambers, by loosening the 2 plugs shown in the picture. Operate the valve for few seconds at low pressure and then lock the plugs.

③ Additional external pilot port for accumulator connection.

Port	LIQZH Size					
	32	40	50	63	80	100
① Air suction	G1/4" CH 6		G1/2" CH 10			
② Air bleeding	G1/4" CH 6					
③ External pilot	G3/8" CH 8	G1/2" CH 10				

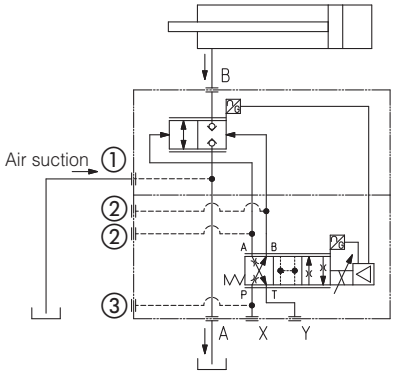

15 POWER SUPPLY AND SIGNALS SPECIFICATIONS

Generic electrical output signals of the valve (e.g. fault or monitor signals) must not be directly used to activate safety functions, like to switch-ON/OFF the machine's safety components, as prescribed by the European standards (Safety requirements of fluid technology systems and components-hydraulics, ISO 4413).

For **LEB-SN-IL** signals see section 16

15.1 Power supply (V+ and V0)

The power supply must be appropriately stabilized or rectified and filtered: apply at least a 10000 µF/40 V capacitance to single phase rectifiers or a 4700 µF/40 V capacitance to three phase rectifiers. In case of separate power supply see 15.2.

⚠ A safety fuse is required in series to each power supply: 2,5 A time lag fuse.

15.2 Power supply for driver's logic and communication (VL+ and VL0) - only for /Z option

The power supply for driver's logic and communication must be appropriately stabilized or rectified and filtered: apply at least a 10000 µF/40 V capacitance to single phase rectifiers or a 4700 µF/40 V capacitance to three phase rectifiers.
The separate power supply for driver's logic on pin 9 and 10, allow to remove solenoid power supply from pin 1 and 2 maintaining active the diagnostics, USB and fieldbus communications.

⚠ A safety fuse is required in series to each driver's logic and communication power supply: 500 mA fast fuse.

15.3 Flow reference input signal (Q_INPUT+)

The driver controls in closed loop the valve spool position proportionally to the external reference input signal.
Reference input signal is factory preset according to selected valve code, defaults are 0 ÷ 10 VDC for standard and 4 ÷ 20 mA for /I option.
Input signal can be reconfigured via software selecting between voltage and current, within a maximum range of ±10 VDC or ± 20 mA.
Drivers with fieldbus interface can be software set to receive reference signal directly from the machine control unit (fieldbus reference).
Analog reference input signal can be used as on-off commands with input range 0 ÷ 24VDC.

15.4 Flow monitor output signal (Q_MONITOR) - not for /F

The driver generates an analog output signal proportional to the actual spool position of the valve; the monitor output signal can be software set to show other signals available in the driver (e.g. analog reference, fieldbus reference, pilot spool position).
Monitor output signal is factory preset according to selected valve code, defaults are 0 ÷ 10 VDC for standard and 4 ÷ 20 mA for /I option.
Output signal can be reconfigured via software selecting between voltage and current, within a maximum range of ±10 VDC or ± 20 mA.

15.5 Enable input signal (ENABLE) - not for standard and /F

To enable the driver, supply a 24 VDC on pin 3 (pin C): Enable input signal allows to enable/disable the current supply to the solenoid, without removing the electrical power supply to the driver; it is used to active the communication and the other driver functions when the valve must be disabled for safety reasons. This condition **does not comply** with norms IEC 61508 and ISO 13849.
Enable input signal can be used as generic digital input by software selection.

15.6 Repeat enable output signal (R_ENABLE) - only for LEB-SN-NP with /Z option

Repeat enable is used as output repeater signal of enable input signal (see 15.5).

15.7 Fault output signal (FAULT) - not for standard and /Q

Fault output signal indicates fault conditions of the driver (solenoid short circuits/not connected, reference signal cable broken for 4 ÷ 20 mA input, spool position transducer cable broken, etc.). Fault presence corresponds to 0 VDC, normal working corresponds to 24 VDC.
Fault status is not affected by the Enable input signal. Fault output signal can be used as digital output by software selection.

16 IO-LINK SIGNALS SPECIFICATIONS - only for LEB-SN-IL

16.1 Power supply for IO-Link communication (L+ and L-)

The IO-Link master provides dedicated 24 VDC power supply for IO-Link communication.
Maximum power consumption: 2 W
Internal electrical isolation of power L+, L- from P24, N24

16.2 Power supply for driver's logic and valve regulation (P24 and N24)

The IO-Link master provides dedicated 24 VDC power supply for valve regulation, logics and diagnostics.
Maximum power consumption: 50 W
Internal electrical isolation of power P24, N24 from L+, L-

16.3 IO-Link data line (C/Q)

C/Q signal is used to establish communication between IO-Link master and valve.

17 ELECTRONIC CONNECTIONS AND LEDS

17.1 Main connector signals - 7 pin - standard, /F and /Q options (A1)

PIN	Standard	/Q	/F	TECHNICAL SPECIFICATIONS	NOTES
A	**V+**			Power supply 24 VDC	Input - power supply
B	**V0**			Power supply 0 VDC	Gnd - power supply
C	**AGND**		**AGND**	Analog ground	Gnd - analog signal
		ENABLE		Enable (24 VDC) or disable (0 VDC) the valve, referred to V0	Input - on/off signal
D	**Q_INPUT+**			Flow reference input signal: ±10 VDC / ±20 mA maximum range Defaults are 0 ÷ 10 VDC for standard and 4 ÷ 20 mA for /I option	Input - analog signal **Software selectable**
E	**INPUT-**			Negative reference input signal for Q_INPUT+	Input - analog signal
F	**Q_MONITOR** referred to: AGND / V0			Flow monitor output signal: ±10 VDC / ±20 mA maximum range Defaults are 0 ÷ 10 VDC for standard and 4 ÷ 20 mA for /I option	Output - analog signal **Software selectable**
			FAULT	Fault (0 VDC) or normal working (24 VDC)	Output - on/off signal
G	**EARTH**			Internally connected to the driver housing	

17.2 Main connector signal - 12 pin - /Z option (A2)

PIN	LEB /Z	LES /Z	TECHNICAL SPECIFICATIONS	NOTES
	V+		Power supply 24 VDC	Input - power supply
1	**V0**		Power supply 0 VDC	Gnd - power supply
2 3	**ENABLE** referred to: V0	VL0	Enable (24 VDC) or disable (0 VDC) the valve	Input - on/off signal
4	**Q_INPUT+**		Flow reference input signal: ±10 VDC / ±20 mA maximum range Defaults are 0 ÷ 10 VDC for standard and 4 ÷ 20 mA for /I option	Input - analog signal **Software selectable**
5	**INPUT-**		Negative reference input signal for Q_INPUT+	Input - analog signal
6	**Q_MONITOR** referred to: AGND	VL0	Flow monitor output signal: ±10 VDC / ±20 mA maximum range Defaults are 0 ÷ 10 VDC for standard and 4 ÷ 20 mA for /I option	Input - analog signal **Software selectable**
7	**AGND**		Analog ground	Output - analog signal
		NC	Do not connect	Gnd - analog signal
8	**R_ENABLE**		Repeat enable, output repeater signal of enable input, referred to V0	Output - on/off signal
		NC	Do not connect	
9	**NC**		Do not connect	
		VL+	Power supply 24 VDC for driver's logic and communication	Input - power supply
10	**NC**		Do not connect	
		VL0	Power supply 0 VDC for driver's logic and communication	Gnd - power supply
11 PE	**FAULT** referred to: V0	VL0	Fault (0 VDC) or normal working (24 VDC)	Output - on/off signal
	EARTH		Internally connected to the driver housing	

Note: do not disconnect VL0 before VL+ when the driver is connected to PC USB port

17.3 IO-Link connector signals - M12 - 5 pin - Coding A, port class B (A) only for **LEB-SN-IL**

PIN	SIGNAL	TECHNICAL SPECIFICATIONS	NOTES
1	**L+**	Power supply 24 VDC for IO-Link communication	Input - power supply
2	**P24**	Power supply 24 VDC for valve regulation, logics and diagnostics	Input - power supply
3	**L-**	Power supply 0 VDC for IO-Link communication	Gnd - power supply
4	**C/Q**	IO-Link data line	Input / Output - signal
5	**N24**	Power supply 0 VDC for valve regulation, logics and diagnostics	Gnd - power supply

Note: L+, L- and P24, N24 are electrically isolated

17.4 Communications connectors (B) - (C)

(B) **USB connector - M12 - 5 pin** always present

PIN	SIGNAL	TECHNICAL SPECIFICATION (1)
1	**+5V_USB**	Power supply
2	**ID**	Identification
3	**GND_USB**	Signal zero data line
4	**D-**	Data line -
5	**D+**	Data line +

(C1) (C2) **BC fieldbus execution, connector - M12 - 5 pin**

PIN	SIGNAL	TECHNICAL SPECIFICATION (1)
1	**CAN_SHLD**	Shield
2	**not used**	(C1) - (C2) pass-through connection (2)
3	**CAN_GND**	Signal zero data line
4	**CAN_H**	Bus line (high)
5	**CAN_L**	Bus line (low)

(C1) (C2) **BP fieldbus execution, connector - M12 - 5 pin**

PIN	SIGNAL	TECHNICAL SPECIFICATION (1)
1	**+5V**	Termination supply signal
2	**LINE-A**	Bus line (high)
3	**DGND**	Data line and termination signal zero
4	**LINE-B**	Bus line (low)
5	**SHIELD**	

(C1) (C2) **EH, EW, EI, EP fieldbus execution, connector - M12 - 4 pin**

PIN	SIGNAL	TECHNICAL SPECIFICATION (1)
1	**TX+**	Transmitter
2	**RX+**	Receiver
3	**TX-**	Transmitter
4	**RX-**	Receiver
	SHIELD	

(1) shield connection on connector's housing is recommended

(2) Pin 2 can be fed with external +5V supply of CAN interface

17.5 LEB-SN-NP connections layout

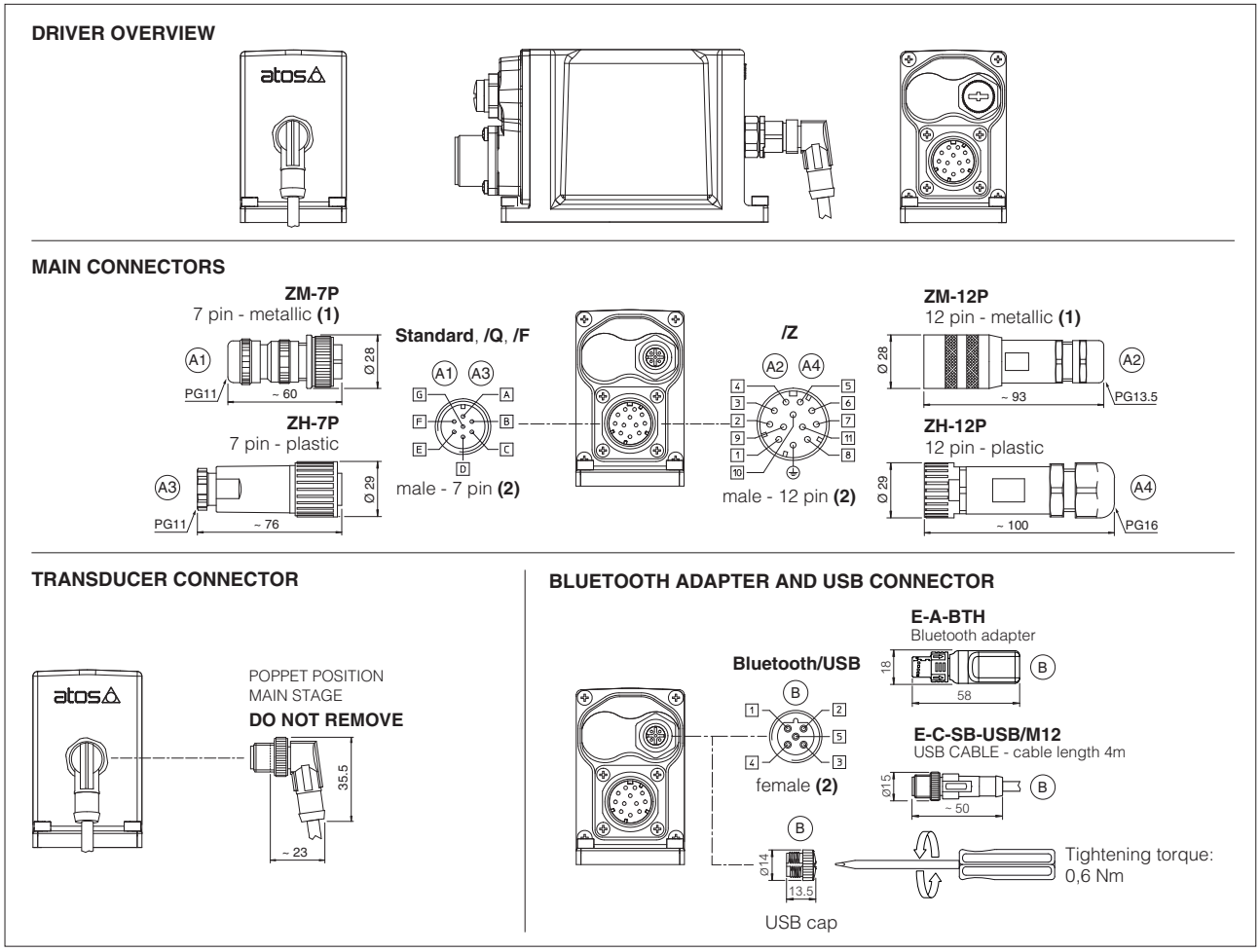

(1) Use of metallic connectors is strongly recommended in order to fulfill EMC requirements **(2)** Pin layout always referred to driver's view

17.6 LEB-SN-IL connections layout

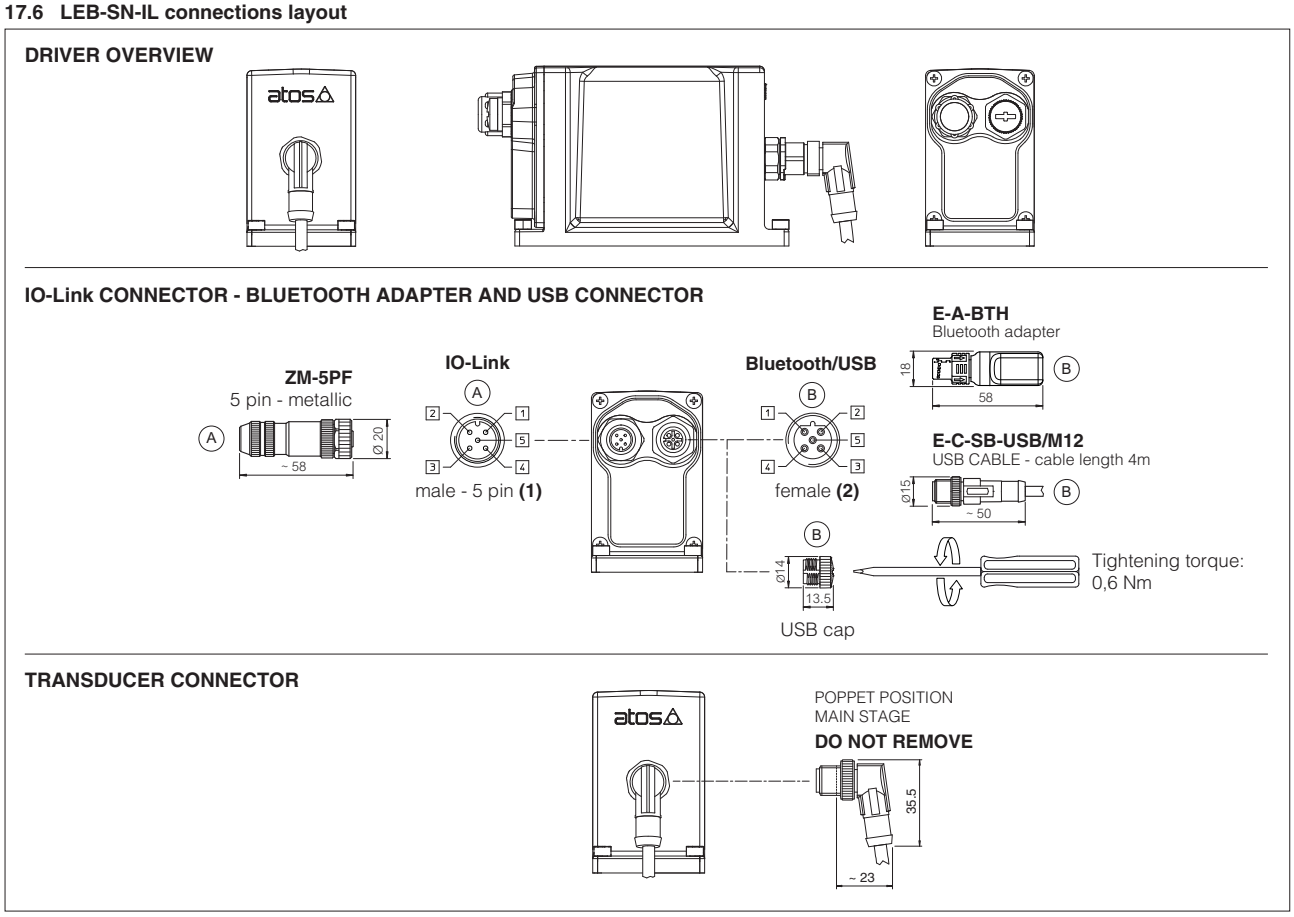

(1) Pin layout always referred to driver's view

17.7 LES connections layout

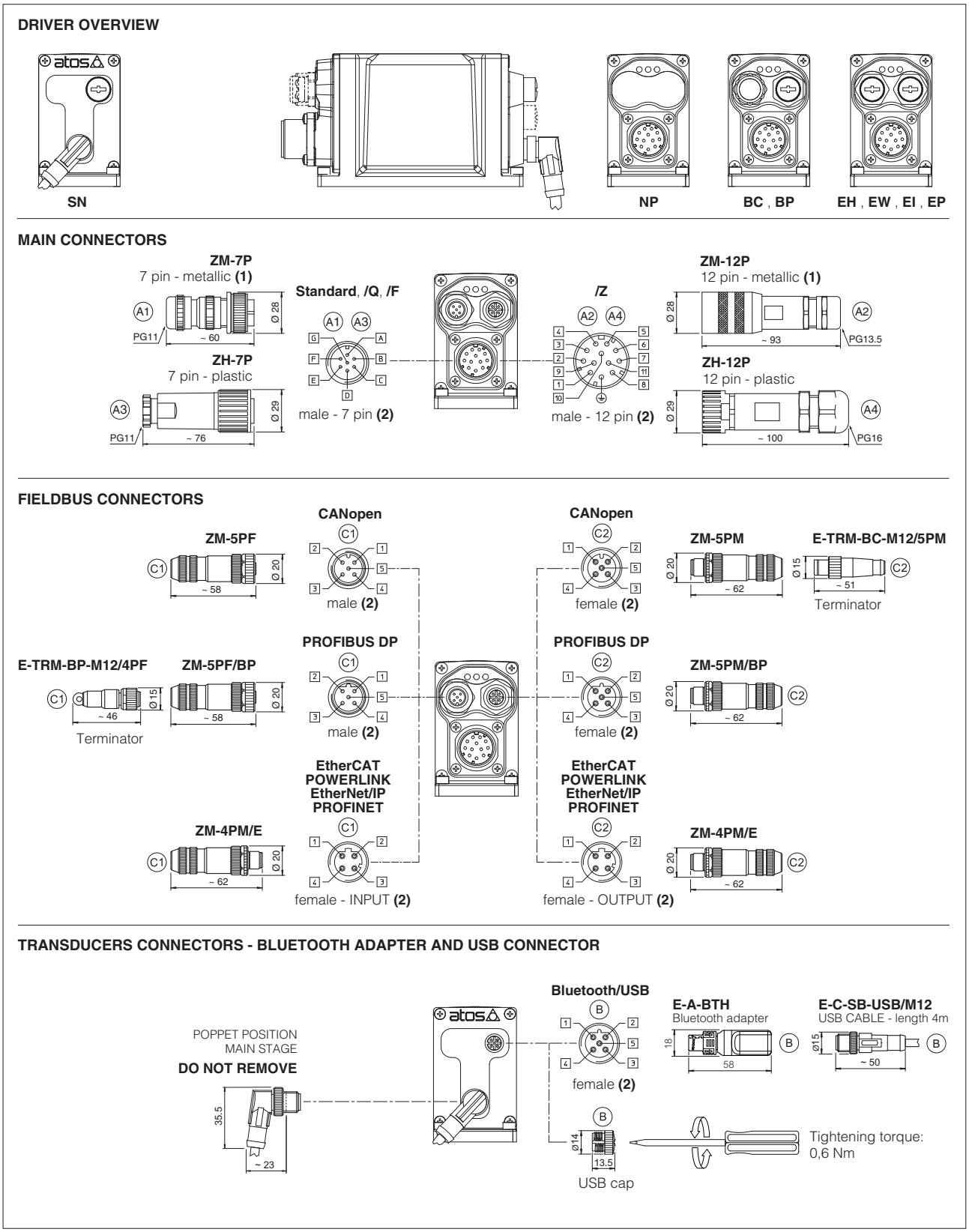

(1) Use of metallic connectors is strongly recommended in order to fulfill EMC requirements **(2)** Pin layout always referred to driver's view

17.8 Diagnostic LEDs - only for **LES**

Three leds show driver operative conditions for immediate basic diagnostics. Please refer to the driver user manual for detailed information.

FIELDBUS / LEDS	NP Not Present	BC CANopen	BP PROFIBUS DP	EH EtherCAT	EW POWERLINK	EI EtherNet/IP	EP PROFINET
L1	VALVE STATUS			LINK/ACT			
L2	NETWORK STATUS			NETWORK STATUS			
L3	SOLENOID STATUS			LINK/ACT			

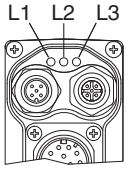

18 IN / OUT FIELDBUS COMMUNICATION CONNECTORS

Two fieldbus communication connectors are always available for digital drivers executions BC, BP, EH, EW, EI, EP. This features allows considerable technical advantages in terms of installation simplicity, wirings reduction and also avoid the usage expensive T-connectors.
For BC and BP executions the fieldbus connectors have an internal pass-through connection and can be used like end point of the fieldbus network, using an external terminator (see tech table **GS500**).
For EH, EW, EI and EP executions the external terminators are not required: each connector is internally terminated.

BC and BP pass-through connection

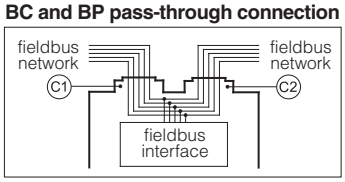

19 CONNECTORS CHARACTERISTICS - to be ordered separately

19.1 Main connectors - 7 pin

CONNECTOR TYPE	POWER SUPPLY AND SIGNALS	POWER SUPPLY AND SIGNALS
CODE	A1 ZM-7P	A3 ZH-7P
Type	7pin female straight circular	7pin female straight circular
Standard	According to MIL-C-5015	According to MIL-C-5015
Material	Metallic	Plastic reinforced with fiber glass
Cable gland	PG11	PG11
Recommended cable	LiYCY 7 x 0,75 mm² max 20 m (logic and power supply) or LiYCY 7 x 1 mm² max 40 m (logic and power supply)	LiYCY 7 x 0,75 mm² max 20 m (logic and power supply) or LiYCY 7 x 1 mm² max 40 m (logic and power supply)
Conductor size	up to 1 mm² - available for 7 wires	up to 1 mm² - available for 7 wires
Connection type	to solder	to solder
Protection (EN 60529)	IP 67	IP 67

19.2 Main connectors - 12 pin

CONNECTOR TYPE	POWER SUPPLY AND SIGNALS	POWER SUPPLY AND SIGNALS
CODE	A2 ZM-12P	A4 ZH-12P
Type	12pin female straight circular	12pin female straight circular
Standard	DIN 43651	DIN 43651
Material	Metallic	Plastic reinforced with fiber glass
Cable gland	PG13,5	PG16
Recommended cable	LiYCY 12 x 0,75 mm² max 20 m (logic and power supply)	LiYCY 10 x 0,14mm² max 40 m (logic) LiYY 3 x 1mm² max 40 m (power supply)
Conductor size	0,5 mm² to 1,5 mm² - available for 12 wires	0,14 mm² to 0,5 mm² - available for 9 wires 0,5 mm² to 1,5 mm² - available for 3 wires
Connection type	to crimp	to crimp
Protection (EN 60529)	IP 67	IP 67

19.3 IO-Link connector - only for **LEB-SN-IL**

CONNECTOR TYPE	IL IO-Link
CODE	A ZM-5PF
Type	5pin female straight circular
Standard	M12 coding A – IEC 61076-2-101
Material	Metallic
Cable gland	Pressure nut - cable diameter 6÷8 mm
Recommended cable	5 x 0,75 mm² max 20 m
Connection type	screw terminal
Protection (EN 60529)	IP 67

19.4 Fieldbus communication connectors

CONNECTOR TYPE	BC CANopen (1)		BP PROFIBUS DP (1)		EH EtherCAT, EW POWERLINK, EI EtherNet/IP, EP PROFINET (2)
CODE	C1 ZM-5PF	C2 ZM-5PM	C1 ZM-5PF/BP	C2 ZM-5PM/BP	C1 C2 ZM-4PM/E
Type	5 pin female straight circular	5 pin male straight circular	5 pin female straight circular	5 pin male straight circular	4 pin male straight circular
Standard	M12 coding A – IEC 61076-2-101		M12 coding B – IEC 61076-2-101		M12 coding D – IEC 61076-2-101
Material	Metallic		Metallic		Metallic
Cable gland	Pressure nut - cable diameter 6÷8 mm		Pressure nut - cable diameter 6÷8 mm		Pressure nut - cable diameter 4÷8 mm
Cable	CANbus Standard (DR 303-1)		PROFIBUS DP Standard		Ethernet standard CAT-5
Connection type	screw terminal		screw terminal		terminal block
Protection (EN 60529)	IP67		IP 67		IP 67

(1) E-TRM-** terminators can be ordered separately - see tech table **GS500**

(2) Internally terminated

20 FASTENING BOLTS AND VALVE MASS

Type	Size	Fastening bolts (1)	Mass [kg]
LIQZH	32	4 socket head screws M16x60 class 12.9 Tightening torque = 300 Nm	12,4
	40	4 socket head screws M20x70 class 12.9 Tightening torque = 600 Nm	18,0
	50	4 socket head screws M20x80 class 12.9 Tightening torque = 600 Nm	26,0
	63	4 socket head screws M30x120 class 12.9 Tightening torque = 2100 Nm	46,9
	80	8 socket head screws M24x80 class 12.9 Tightening torque = 1000 Nm	75,0
	100	8 socket head screws M30x120 class 12.9 Tightening torque = 2100 Nm	128,4

(1) Fastening bolts supplied with the valve

21 MAIN CONNECTORS INSTALLATION DIMENSIONS

Installation 1 - possible interference between manifold and main connector

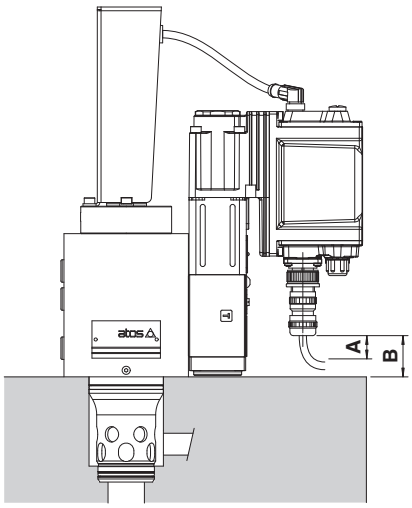

A = 15 mm space to remove the 7 or 12 pin main connectors

B = Clearance between main connector to valve's mounting surface. See the below table to verify eventual interferences, depending to the valve size and connector type

Installation 2 - no interference

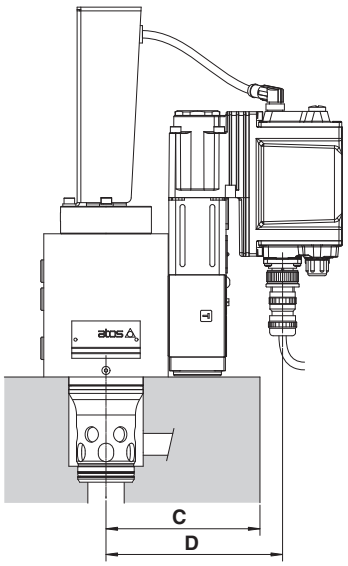

C = Max manifold dimension to avoid interference with the main connector, see below table

Reference dimension	Main connector code	Valve size					
		32	40	50	63	80	100
B	ZM-7P	35	35	45	65	65	80
	ZH-7P	**(1)**	**(1)**	29	52	52	67
	ZM-12P	**(1)**	**(1)**	**(1)**	32	32	47
	ZH-12P	**(1)**	**(1)**	**(1)**	**(1)**	**(2)**	40
C (max)	-	121	134	141	172	202	229
D	-	141	154	161	192	222	249

Above dimenions refer to the main connector fully screwed to driver's connector. The space **A** = 15 mm to remove the connector must be considered

(1) The connector installation can be performed only if the valve's driver protrudes from the edge of the relevant mounting manifold as rapresented in above "Installation 2"

(2) The connector installation may be critic, depending to the cable size and bending radius

22 INSTALLATION DIMENSIONS [mm]

LIQZH-LEB-322
LIQZH-LES-322

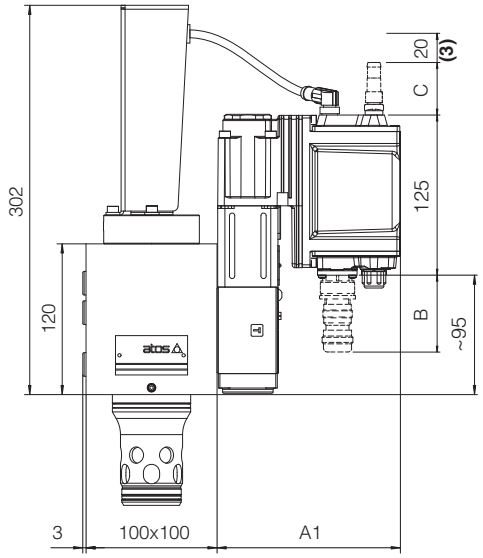

LIQZH-LEB-402
LIQZH-LES-402

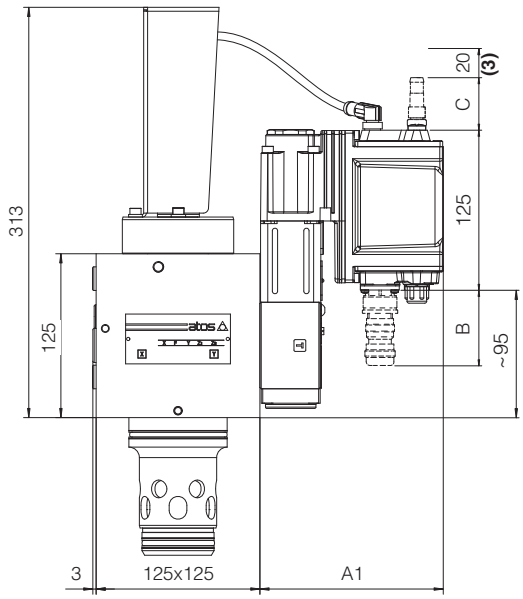

LIQZH-LEB-502
LIQZH-LES-502

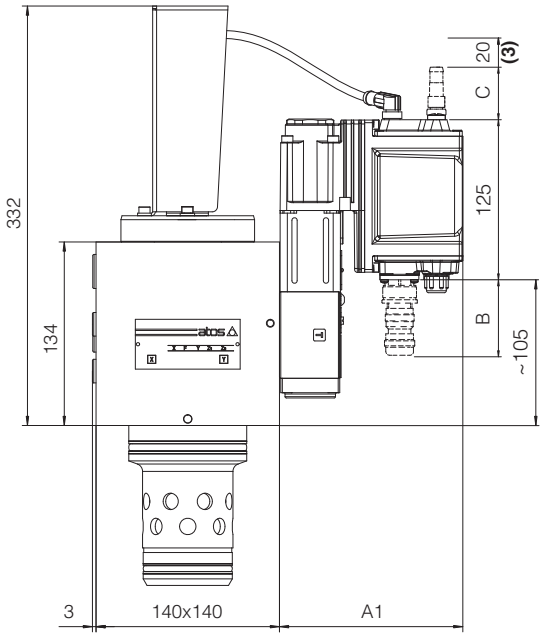

LIQZH-LEB-632
LIQZH-LES-632

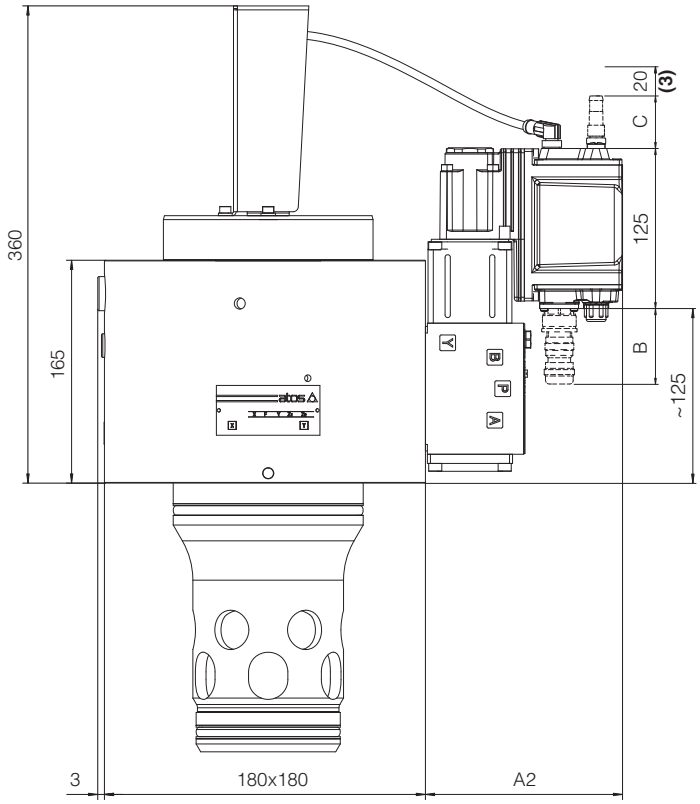

LIQZH	A1	A2	B (1)	C (2)
LEB - SN - IL	140	150	60	-
LEB - SN - NP	140	150	60	-
LES - SN - NP, BC, BP, EH	140	150	60	58
LES - SN - EW, EI, EP	155	165	60	58

(1) The indicated dimension refers to the main connector ZM-7P. See section 21 for main connectors installation dimensions
(2) The indicated dimension refers to the longer connectors or Bluetooth adapter
For dimensions of connectors and Bluetooth adapter, see sections 17.5, 17.6 and 17.7
(3) Space required for connection cable and for connector removal

Note: for mounting surface and cavity dimensions, see table P006

LIQZH-LEB-802
LIQZH-LES-802

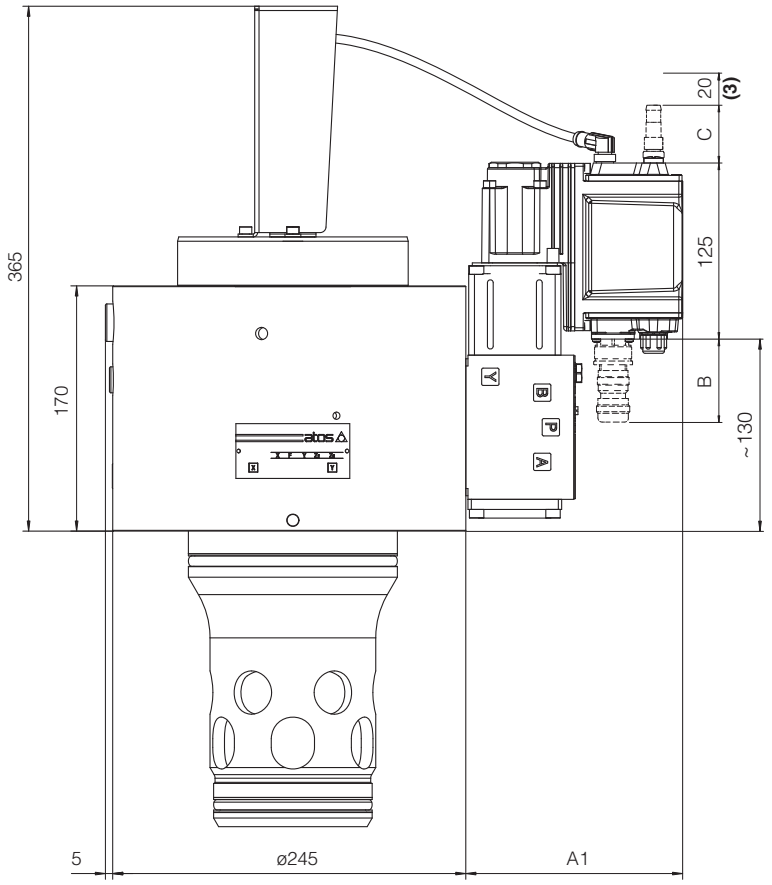

LIQZH	A2	B (1)	C (2)
LEB - SN - IL	150	60	-
LEB - SN - NP	150	60	-
LES - SN - NP, BC, BP, EH	150	60	58
LES - SN - EW, EI, EP	165	60	58

(1) The indicated dimension refers to the main connector ZM-7P. See section 21 for main connectors installation dimensions
(2) The indicated dimension refers to the longer connectors or Bluetooth adapter
For dimensions of connectors and Bluetooth adapter, see sections 17.5, 17.6 and 17.7
(3) Space required for connection cable and for connector removal

Note: for mounting surface and cavity dimensions, see table P006

LIQZH-LEB-1002
LIQZH-LES-1002

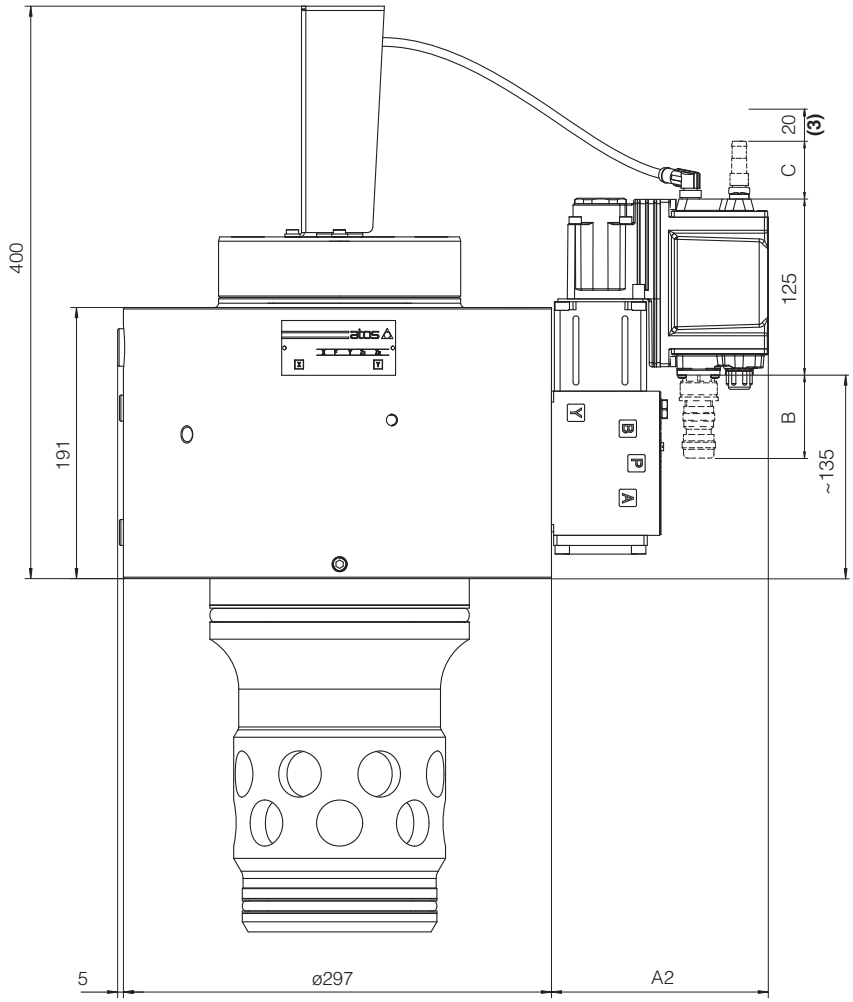

LIQZH	A2	B (1)	C (2)
LEB - SN - IL	150	60	-
LEB - SN - NP	150	60	-
LES - SN - NP, BC, BP, EH	150	60	58
LES - SN - EW, EI, EP	165	60	58

(1) The indicated dimension refers to the main connector ZM-7P. See section 21 for main connectors installation dimensions
(2) The indicated dimension refers to the longer connectors or Bluetooth adapter
For dimensions of connectors and Bluetooth adapter, see sections 17.5, 17.6 and 17.7
(3) Space required for connection cable and for connector removal

Note: for mounting surface and cavity dimensions, see table P006

23 RELATED DOCUMENTATION

FS001 Basics for digital electrohydraulics
FS900 Operating and maintenance information for proportional valves
GS500 Programming tools
GS510 Fieldbus
GS520 IO-Link interface
K800 Electric and electronic connectors
P006 Mounting surfaces and cavities for cartridge valves
E-MAN-RI-LEB TEB/LEB user manual
E-MAN-RI-LES TES/LES user manual

Digital proportional directional valves

direct, without transducer, with positive spool overlap

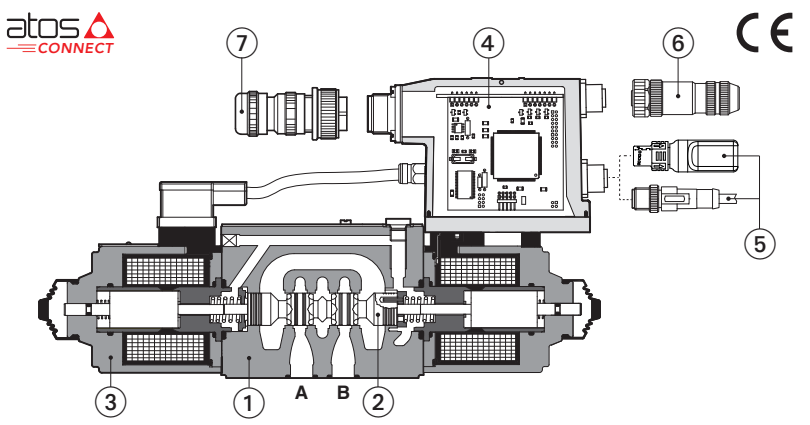

DKZOR-AES-BC-171

① Valve body
② Spool
③ Proportional solenoid
④ On-board digital driver
⑤ Bluetooth/USB connection
⑥ Fieldbus connector
⑦ Main connector

DHZO-A, DHZO-AEB, DHZO-AES DKZOR-A, DKZOR-AEB, DKZOR-AES

Digital proportional valves without position transducer and with positive spool overlap, for open loop directional controls and not compensated flow regulations.

A to be coupled with off-board drivers.

AEB basic execution, with on-board digital driver, with analog reference signal or IO-Link interface for digital reference signal, valve settings, and real-time diagnostics.

AES full execution, with on-board digital driver which includes also fieldbus interfaces for digital reference signal, valve settings, and real-time diagnostics.

For **AEB** and **AES**, Bluetooth/USB connection is always present for valve settings via mobile App and Atos PC software.

DHZO:	**DKZOR**:
Size: **06** - ISO 4401	Size: **10** - ISO 4401
Max flow: **70 l/min**	Max flow: **160 l/min**
Max pressure: **350 bar**	Max pressure: **315 bar**

1 MODEL CODE for STANDARD SPOOLS

DHZO	-	AES	-	BP	-	0	71	-	L	5	/	*	/	*	/	*	*	/	*

DHZO = size 06
DKZOR = size 10

A = off-board driver, see section 2
AEB = basic on-board digital driver
AES = full on-board digital driver

IO-Link interface, only for AEB, see section 6 :
NP = Not present **IL** = IO-Link

Fieldbus interfaces, only for AES, see section 7 :
BC = CANopen **EH** = EtherCAT
BP = PROFIBUS DP

Valve size ISO 4401:
0 = 06 **1** = 10

Configuration (1):

	Standard	Option **/B**
51 =	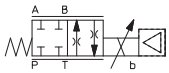	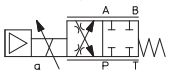
53 =	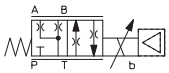	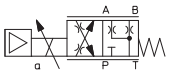
71 =	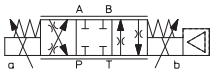	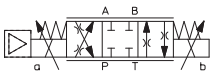
73 =	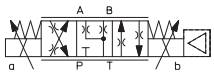	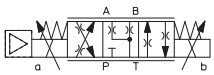

Spool type, regulating characteristics, see section 12 :
L = linear **S** = progressive **D** = differential-progressive
P-A = Q, B-T = Q/2
P-B = Q/2, A-T = Q

(1) Hydraulic symbols are represented with on-board digital driver

Series number

Seals material, see section 11 :
- = NBR
PE = FKM
BT = NBR low temp.

Coil voltage, only for **A** - see section 16 :
- = standard coil for 24 VDC Atos drivers
6 = optional coil for 12 VDC Atos drivers
18 = optional coil for low current drivers

Bluetooth option, only for **AEB** and **AES (1)**, see section 5 :
T = Bluetooth adapter supplied with the valve

Hydraulic options (2):
B = solenoid and on-board digital driver at side of port A
Y = external drain

Hand lever options, only for **A**:
MO = horizontal hand lever
MV = vertical hand lever
BMO = horizontal hand lever installed at side of port A
BMV = vertical hand lever installed at side of port A

Electronic options, only for **AEB** and **AES (2) (3)**:
C = current feedback for pressure transducer 4 ÷ 20 mA (only for **W**)
I = current reference input 4 ÷ 20 mA
Q = enable signal
Z = double power supply, enable, fault and monitor signals - 12 pin connector
W = power limitation function

Spool size:	**14** (L)	**1** (L)	**2** (S)	**3** (L,S,D)	**5** (L,S,D)
DHZO =	1	4,5	8	18	28
DKZOR =	-	-	-	45	60

Nominal flow (l/min) at Δp 10bar P-T (see section 9)

(2) For possible combined options, see section 15
(3) /I, /Q, /Z options not available for AEB-IL

2 OFF-BOARD ELECTRONIC DRIVERS - only for **A**

Drivers model	E-MI-AC-01F		E-MI-AS-IR		E-BM-AS-PS		E-BM-AES
Type	Analog		Digital				
Voltage supply (VDC)	12	24	12	24	12	24	24
Valve coil option	/6	std	/6	std	/6	std	std
Format	plug-in to solenoid				DIN-rail panel		
Tech table	G010		G020		G030		GS050

3 GENERAL NOTES

Atos digital proportionals valves are CE marked according to the applicable directives (e.g. Immunity and Emission EMC Directive).
Installation, wirings and start-up procedures must be performed according to the general prescriptions shown in tech table **FS900** and in the user manuals included in the E-SW-SETUP programming software.

4 VALVE SETTINGS AND PROGRAMMING TOOLS - see tech. table **GS500**

4.1 Atos CONNECT mobile App

Free downloadable App for smartphones and tablets which allows quick access to valve main functional parameters and basic diagnostic information via Bluetooth, thus avoiding physical cable connection and significantly reducing commissioning time.
Atos CONNECT supports Atos digital valve drivers equipped with E-A-BTH adapter or with built-in Bluetooth. It does not support valves with p/Q control or axis controls.

Download on the App Store

GET IT ON Google Play

4.2 E-SW-SETUP PC software

Free downloadable software for PC allows to set all valve functional parameters and to access complete diagnostic information of digital valve drivers via Bluetooth/USB service port.
Atos E-SW-SETUP PC software supports all Atos digital valve drivers and it is available at www.atos.com in MyAtos area.

WARNING: drivers USB port is not isolated! For E-C-SB-USB/M12 cable, the use of E-A-SB-USB/OPT isolator adapter is highly recommended for PC protection

Bluetooth or USB connection

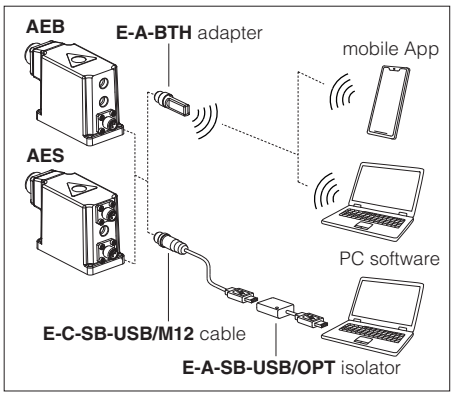

5 BLUETOOTH OPTION - see tech. table **GS500**

T option adds Bluetooth® connectivity to Atos valve drivers thanks to E-A-BTH adapter, which can be left permanently installed on-board, to allow the Bluetooth connection with the valve drivers at any time. E-A-BTH adapter can also be purchased separately and used to connect with any supported Atos digital product.
Bluetooth connection to the valve can be protected against unauthorised access by setting a personal password. The adapter leds visually indicates the status of valve driver and Bluetooth connection.

WARNING: for the list of countries where the Bluetooth adapter has been approved, see tech. table **GS500**
T option is not available for the Indian market, so the Bluetooth adapter must be ordered separately.

6 IO-LINK - only for **AEB**, see tech. table **GS520**

IO-Link allows low cost digital communication between the valve and machine central unit. The valve is directly connected to a port of an IO-Link master (point-to-point connection) via low-cost unshielded cables for digital reference, diagnostic and settings. The IO-Link master works as a hub exchanging this information with the machine central unit via fieldbus.

7 FIELDBUS - only for **AES**, see tech. table **GS510**

Fieldbus allows valve direct communication with machine control unit for digital reference, valve diagnostics and settings. These execution allow to operate the valves through fieldbus or analog signals available on the main connector.

8 GENERAL CHARACTERISTICS

Assembly position	Any position
Subplate surface finishing to ISO 4401	Acceptable roughness index: Ra ≤ 0,8, recommended Ra 0,4 – Flatness ratio 0,01/100
MTTFd valves according to EN ISO 13849	150 years, for further details see technical table P007
Ambient temperature range	**A:** **Standard** = -20°C ÷ +70°C **/PE** option = -20°C ÷ +70°C **/BT** option = -40°C ÷ +60°C **AEB, AES:** **Standard** = -20°C ÷ +60°C **/PE** option = -20°C ÷ +60°C **/BT** option = -40°C ÷ +60°C
Storage temperature range	**A:** **Standard** = -20°C ÷ +80°C **/PE** option = -20°C ÷ +80°C **/BT** option = -40°C ÷ +70°C **AEB, AES:** **Standard** = -20°C ÷ +70°C **/PE** option = -20°C ÷ +70°C **/BT** option = -40°C ÷ +70°C
Surface protection	Zinc coating with black passivation, galvanic treatment (driver housing for AEB and AES)
Corrosion resistance	Salt spray test (EN ISO 9227) > 200 h
Vibration resistance	See technical table G004 (for AEB and AES)
Compliance	CE according to EMC directive 2014/30/EU (Immunity: EN 61000-6-2; Emission: EN 61000-6-3) RoHS Directive 2011/65/EU as last update by 2015/863/EU REACH Regulation (EC) n°1907/2006

9 HYDRAULIC CHARACTERISTICS - based on mineral oil ISO VG 46 at 50 °C

Valve model	DHZO					DKZOR	
Pressure limits [bar]	ports **P**, **A**, **B** = 350; **T** = 210 (250 with external drain /Y) **Y** = 10					ports **P**, **A**, **B** = 315; **T** = 210 (250 with external drain /Y) **Y** = 10	
Spool type and size	**L14**	**L1**	**S2**	**L3, S3, D3**	**L5, S5, D5**	**L3, S3, D3**	**L5, S5, D5**
Nominal flow Δp P-T [l/min] **(1)** Δp= 10 bar	1	4,5	8	18	28	45	60
Δp= 30 bar	1,7	8	14	30	50	80	105
Δp= 70 bar	2,6	12	21	45	70	120	160
Max permissible flow **(2)**	4	18	30	50	70	120	160
Leakage [cm³/min]	<30 (at p = 100 bar); <135 (at p = 350 bar)					<80 (at p = 100 bar); <600 (at p = 315 bar)	
Response time **(3)** [ms]	≤ 30					≤ 40	
Hysteresis	≤ 5 [% of max regulation]						
Repeatibility	± 1 [% of max regulation]						

Note: above performance data refer to valves coupled with Atos electronic drivers, see section 2

(1) For different Δp, the max flow is in accordance to the diagrams in section 12.2
(2) See detailed diagrams in section 12.3
(3) 0-100% step signal, see detailed diagrams in section 12.4

10 ELECTRICAL CHARACTERISTICS

Power supplies	Nominal : +24 VDC Rectified and filtered : VRMS = 20 ÷ 32 VMAX (ripple max 10 % VPP)					
Max power consumption	DHZO			DKZOR		
	A = 30 W	**AEB**, **AES** = 50 W		**A** = 35 W	**AEB**, **AES** = 50 W	
Coil voltage code	standard	option /6	option /18	standard	option /6	option /18
Max. solenoid current	2,2 A	2,75 A	1 A	2,6 A	3,25 A	1,2 A
Coil resistance R at 20°C	3 ÷ 3,3 Ω	2 ÷ 2,2 Ω	13 ÷ 13,4 Ω	3,8 ÷ 4,1 Ω	2,2 ÷ 2,4 Ω	12 ÷ 12,5 Ω
Analog input signals	Voltage: range ±10 VDC (24 VMAX tolerant) Input impedance: Ri > 50 kΩ Current: range ±20 mA Input impedance: Ri = 500 Ω					
Monitor output	Output range: voltage ±5 VDC @ max 5 mA					
Enable input	Range: 0 ÷ 9 VDC (OFF state), 15 ÷ 24 VDC (ON state), 9 ÷ 15 VDC (not accepted); Input impedance: Ri > 87 kΩ					
Fault output	Output range : 0 ÷ 24 VDC (ON state ≅ VL+ [logic power supply] ; OFF state ≅ 0 V) @ max 50 mA; external negative voltage not allowed (e.g. due to inductive loads)					
Pressure transducer power supply (only for /W option)	+24VDC @ max 100 mA (E-ATR-8 see tech table **GS465**)					
Alarms	Solenoid not connected/short circuit, cable break with current reference signal, over/under temperature, current control monitoring, power supplies level, pressure transducer failure (/W option)					
Insulation class	H (180°) Due to the occurring surface temperatures of the solenoid coils, the European standards ISO 13732-1 and EN982 must be taken into account					
Protection degree to DIN EN60529	**A** = IP65; **AEB**, **AES** = IP66 / IP67 with mating connectors					
Duty factor	Continuous rating (ED=100%)					
Tropicalization	Tropical coating on electronics PCB					
Additional characteristics	Short circuit protection of solenoid's current supply; current control by P.I.D. with rapid solenoid switching; protection against reverse polarity of power supply					
Communication interface	USB Atos ASCII coding	IO-Link Interface and System Specification 1.1.3	CANopen EN50325-4 + DS408	PROFIBUS DP EN50170-2/IEC61158	EtherCAT IEC 61158	
Communication physical layer	not insulated USB 2.0+USB OTG	SDCI class port B	optical insulated CAN ISO11898	optical insulated RS485	Fast Ethernet, insulated 100 Base TX	
Recommended wiring cable	LiYCY shielded cables, see section 20					

Note: a maximum time of 500 ms (depending on communication type) has to be considered between the driver energizing with the 24 VDC power supply and when the valve is ready to operate. During this time the current to the valve coils is switched to zero.

11 SEALS AND HYDRAULIC FLUIDS - for other fluids not included in below table, consult our technical office

Seals, recommended fluid temperature	NBR seals (standard) = -20°C ÷ +60°C (+80°C for **A**), with HFC hydraulic fluids = -20°C ÷ +50°C FKM seals (/PE option) = -20°C ÷ +80°C NBR low temp. seals (/BT option) = -40°C ÷ +60°C, with HFC hydraulic fluids = -20°C ÷ +50°C			
Recommended viscosity	20 ÷ 100 mm²/s - max allowed range 15 ÷ 380 mm²/s			
Max fluid contamination level normal operation	ISO4406 class 18/16/13 NAS1638 class 7		see also filter section at www.atos.com or KTF catalog	
Max fluid contamination level longer life	ISO4406 class 16/14/11 NAS1638 class 5			
Hydraulic fluid	**Suitable seals type**	**Classification**	**Ref. Standard**	
Mineral oils	NBR, FKM, NBR low temp.	HL, HLP, HLPD, HVLP, HVLPD	DIN 51524	
Flame resistant without water	FKM	HFDU, HFDR	ISO 12922	
Flame resistant with water	NBR, NBR low temp.	HFC		

12 DIAGRAMS - based on mineral oil ISO VG 46 at 50 °C

12.1 Regulation diagrams - values measure at Δp 30 bar P-T

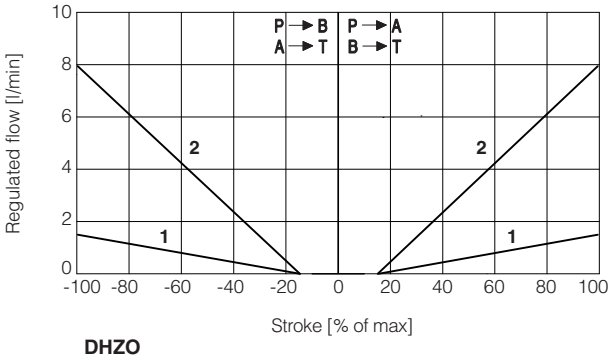

DHZO
1 = L14 **2** = L1

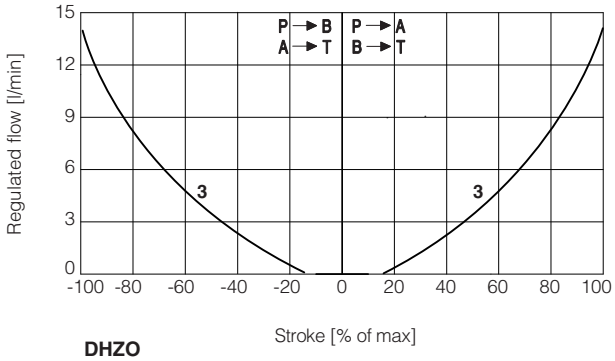

DHZO
3 = S2

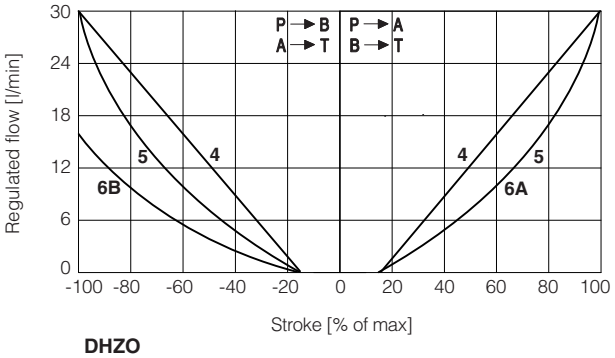

DHZO
4 = L3 **5** = S3 **6A** = D3 (P → A, A → T)
6B = D3 (P → B, B → T)

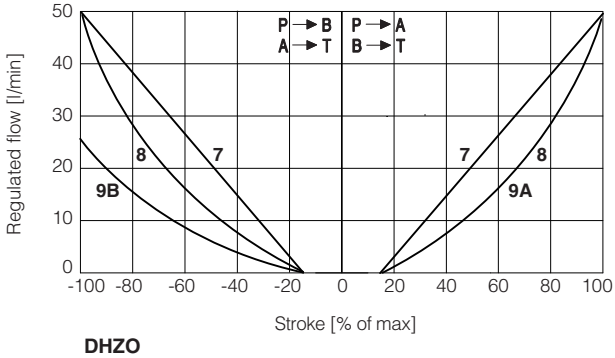

DHZO
7 = L5 **8** = S5 **9A** = D5 (P → A, A → T)
9B = D5 (P → B, B → T)

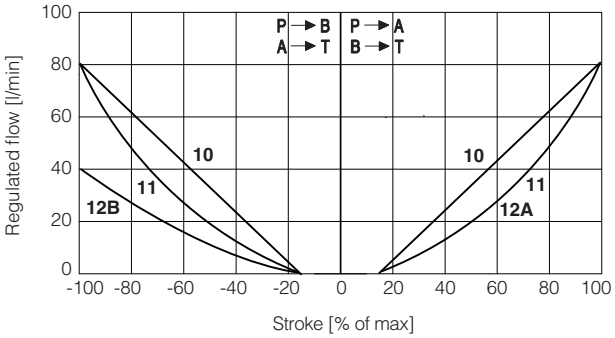

DKZOR
10 = L3 **11** = S3 **12A** = D3 (P → A, A → T)
12B = D3 (P → B, B → T)

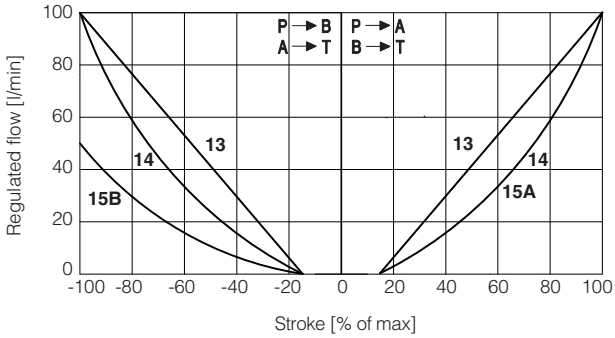

DKZOR
13 = L5 **14** = S5 **15A** = D5 (P → A, A → T)
15B = D5 (P → B, B → T)

Note: Hydraulic configuration vs. reference signal for configuration 71 and 73 (standard and option /B)

Reference signal $\left.\begin{matrix} 0 \div +10\ V \\ 12 \div 20\ mA \end{matrix}\right\}$ P → A / B → T

Reference signal $\left.\begin{matrix} 0 \div -10\ V \\ 12 \div 4\ mA \end{matrix}\right\}$ P → B / A → T

12.2 Flow /Δp diagrams - stated at 100% of valve stroke

DHZO

1 = spool L14
2 = spool L1
3 = spool S2
4 = spool L3, S3, D3
5 = spool L5, S5, D5

DKZOR

6 = spool S3, L3, D3
7 = spool S5, L5, D5

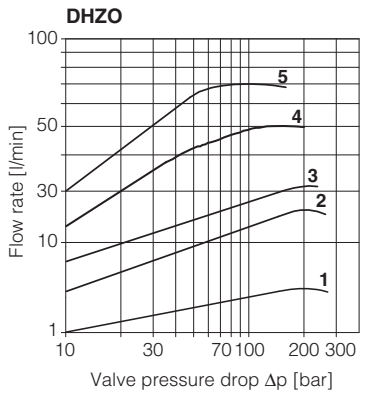

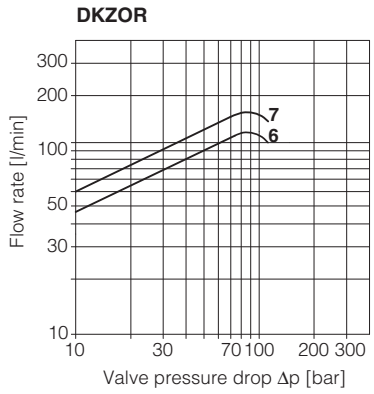

12.3 Operating limits

DHZO

1 = spool L14
2 = spool L1
3 = spool S2
4 = spool L3, S3, D3
5 = spool L5, S5, D5

DKZOR

6 = spool S3, L3, D3
7 = spool S5, L5, D5

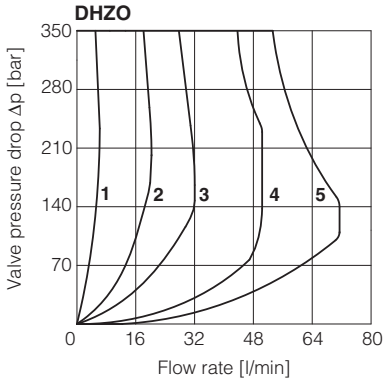

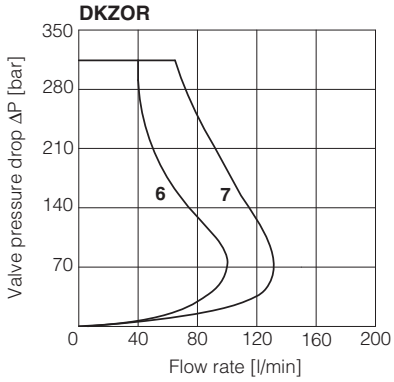

12.4 Response time

The response times in below diagrams are measured at different steps of the reference input signal. They have to be considered as average values. For the valves with digital electronics the dynamics performances can be optimized by setting the internal software parameters.

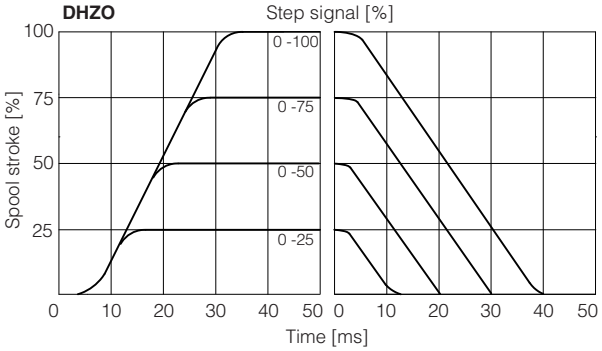

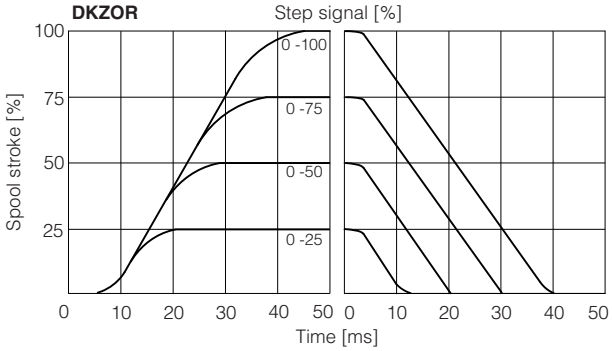

12.5 Operation as throttle valve

Single solenoid valves configuration 51 and 53 can be used as simple throttle valves:
Pmax = 250 bar (option /Y advisable)

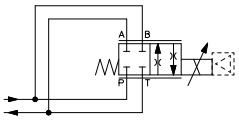

Max flow Δp= 15 bar [l/min]	Spool type and size				
	L14	**L1**	**S2**	**L3 S3**	**L5 S5**
DHZO	4	16	28	60	100
DKZOR	-	-	-	160	200

13 HYDRAULIC OPTIONS

B = DHZO-05 and DKZOR-15 = solenoid and on-board digital driver at side of port A.
DHZO-07 and DKZOR-17 = on-board digital driver at side of port A.

Y = External drain advisable when the valve is used in double flow path, see section 12.5.
This option is mandatory if the pressure in port T exceeds 210 bar.

Hand lever option - only for **DHZO-A** with spool type S3, S5, D3, D5, L3, L5.

It allows to operate the valve in absence of electrical power supply.
For detailed description of DHZO-A with hand lever option see tech. table **E138**.

MO = Horizontal hand lever

BMO = Horizontal hand lever installed at side of port A

MV = Vertical hand lever

BMV = Vertical hand lever installed at side of port A

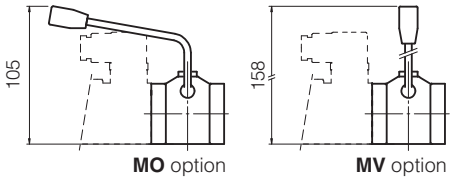

The following supplementary options allow to operate **DHZO-A** and **DKZOR-A** in absence of electrical power supply by means of a micrometric screw replacing the standard solenoid manual override, see tech. table **TK150**

N = Manual micrometric adjustment

NV = As option /N plus handwheel

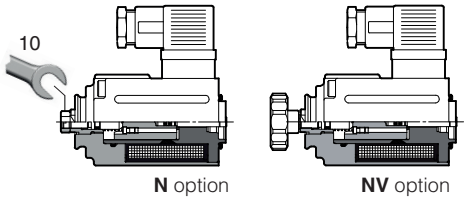

14 ELECTRONIC OPTIONS - only for **AEB** and **AES**

I = This option provides 4 ÷ 20 mA current reference, instead of the standard ±10 VDC.
Input signal can be reconfigured via software selecting between voltage and current, within a maximum range of ±10 VDC or ±20 mA.
It is normally used in case of long distance between the machine control unit and the valve or where the reference signal can be affected by electrical noise; the valve functioning is disabled in case of reference signal cable breakage.
Note: **/I** option not available for **AEB-IL**

Q = This option permits to inhibit the valve function without removing the power supply to the driver. Upon disable command the current to the solenoid is zeroed and the valve's spool moves to rest position.
The option /Q is suggested for all cases where the valve has to be frequently inhibited during the machine cycle – see 17.5 for signal specifications.
Note: **/Q** option not available for **AEB-IL**

Z = This option provides, on the 12 pin main connector, the following additional features:
Fault output signal - see 17.6
Enable input signal - see above option /Q
Power supply for driver's logics and communication - see 17.2
Note: **/Z** option not available for **AEB-IL**

C = Only in combination with option **/W**
This option is available to connect pressure transducers with 4 ÷ 20 mA current output signal, instead of the standard 0 ÷ 10 VDC.
Input signal can be reconfigured via software selecting between voltage and current, within a maximum range of ±10 VDC or ±20 mA.

W = Only for valves coupled with pressure compensator, see tech table **D150**.
It provides the hydraulic power limitation function. The driver receives the flow reference signal by the analog input INPUT+ and a pressure transducer, installed in the hydraulic system, has to be connected to the driver's analog input TR.
When the actual requested hydraulic power **p**x**Q** (TR x INPUT+) reaches the max power limit (p1xQ1), internally set by software, the driver automatically reduces the flow regulation of the valve. The higher is the pressure feedback the lower is the valve's regulated flow:

$$\text{Flow regulation} = \text{Min}\left(\frac{\text{PowerLimit [sw setting]}}{\text{Transducer Pressure [TR]}}\ ;\ \text{Flow Reference [INPUT+]}\right)$$

Notes: for **AEB-IL** the drive receives the flow reference signal directly by IO-Link interface
for **AES** the drive can receive the flow reference signal directly by fieldbus interface

Hydraulic Power Limitation - only for option **/W**

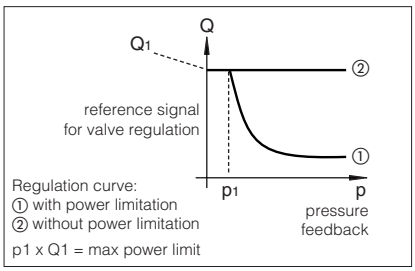

15 POSSIBLE COMBINED OPTIONS

For **AEB-NP** and **AES**

Hydraulic options: /BY

Electronic options: /IQ, /IZ, /IW, /CW, /CWI

For **AEB-IL**

Hydraulic options: /BY

Electronic options: /CW

Note: **/T** Bluetooth adapter option can be combined with all other options

16 COIL VOLTAGE OPTIONS - only for **A**

6 = Optional coil to be used with Atos drivers with power supply 12 VDC.

18 = Optional coil to be used with electronic drivers not supplied by Atos, with power supply 24 VDC and with max current limited to 1A.

17 POWER SUPPLY AND SIGNALS SPECIFICATIONS - only for **AEB** and **AES**

Generic electrical output signals of the valve (e.g. fault or monitor signals) must not be directly used to activate safety functions, like to switch-ON/OFF the machine's safety components, as prescribed by the European standards (Safety requirements of fluid technology systems and components-hydraulics, ISO 4413).

For **AEB-IL** see section 18 for IO-Link signals specifications and see 17.7 for presssure trasducer signal for **/W** option.

17.1 Power supply (V+ and V0)

The power supply must be appropriately stabilized or rectified and filtered: apply at least a 10000 µF/40 V capacitance to single phase rectifiers or a 4700 µF/40 V capacitance to three phase rectifiers. In case of separate power supply see 17.2.

⚠ A safety fuse is required in series to each power supply: 2,5 A time lag fuse.

17.2 Power supply for driver's logic and communication (VL+ and VL0) - only for **/Z** and **/W** options

The power supply for driver's logic and communication must be appropriately stabilized or rectified and filtered: apply at least a 10000 µF/40 V capacitance to single phase rectifiers or a 4700 µF/40 V capacitance to three phase rectifiers.
The separate power supply for driver's logic on pin 9 and 10, allow to remove solenoid power supply from pin 1 and 2 maintaining active the diagnostics, USB and fieldbus communications.

⚠ A safety fuse is required in series to each driver's logic and communication power supply: 500 mA fast fuse.

17.3 Reference input signal (INPUT+)

The driver controls in closed loop the current to the valve proportionally to the external reference input signal.
Reference input signal is factory preset according to selected valve code, defaults are ±10 VDC for standard and 4 ÷ 20 mA for /I option.
Input signal can be reconfigured via software selecting between voltage and current, within a maximum range of ±10 VDC or ± 20 mA.
Drivers with fieldbus interface (BC, BP, EH) can be software set to receive reference signal directly from the machine control unit (fieldbus reference). Analog reference input signal can be used as on-off commands with input range 0 ÷ 24VDC.

17.4 Monitor output signals (MONITOR and MONITOR2)

The driver generates an analog output signal (MONITOR) proportional to the actual coil current of the valve; the monitor output signal can be software set to show other signals available in the driver (e.g. analog reference, fieldbus reference).
Monitor output signal is factory preset according to selected valve code, default settings is ±5 VDC (1V = 1A).
Output signal can be reconfigured via software, within a maximum range of ±5 VDC.

Option /W
The driver generates a second analog output signal (MONITOR2) proportional to the actual system pressure.
The output maximum range is ±5 VDC; default setting is 0 ÷ 5 VDC.

17.5 Enable input signal (ENABLE) - not for standard

To enable the driver, supply a 24 VDC on pin 3 (pin C): Enable input signal allows to enable/disable the current supply to the solenoid, without removing the electrical power supply to the driver; it is used to active the communication and the other driver functions when the valve must be disabled for safety reasons. This condition **does not comply** with norms IEC 61508 and ISO 13849.
Enable input signal can be used as generic digital input by software selection.

17.6 Fault output signal (FAULT) - only for **/Z** and **/W** options

Fault output signal indicates fault conditions of the driver (solenoid short circuits/not connected, reference signal broken for 4 ÷ 20 mA input, etc.).
Fault presence corresponds to 0 VDC, normal working corresponds to 24 VDC.
Fault status is not affected by the Enable input signal.

17.7 Remote pressure transducer input signal (TR) - only for **/W** option

Analog pressure transducers can be directly connected to the driver (see 19.5).
Analog input signal is factory preset according to selected driver code, defaults are 0 ÷ 10 VDC for standard and 4 ÷ 20 mA for /C option.
Input signal can be reconfigured via software selecting between voltage and current, within a maximum range of ±10 VDC or ± 20 mA.
Note: transducer feedback can be read as a digital information through fieldbus and IO-Link communication - software selectable.

18 IO-LINK SIGNALS SPECIFICATIONS - only for **AEB-IL**

18.1 Power supply for IO-Link communication (L+ and L-)

The IO-Link master provides dedicated 24 VDC power supply for IO-Link communication.
Maximum power consumption: 2 W
Internal electrical isolation of power L+, L- from P24, N24

18.2 Power supply for driver's logic and valve regulation (P24 and N24)

The IO-Link master provides dedicated 24 VDC power supply for valve regulation, logics and diagnostics.
Maximum power consumption: 50 W
Internal electrical isolation of power P24, N24 from L+, L-

18.3 IO-Link data line (C/Q)

C/Q signal is used to establish communication between IO-Link master and valve.

19 ELECTRONIC CONNECTIONS

19.1 Main connector signals - 7 pin (A1) Standard and /Q option - for AEB-NP and AES

PIN	Standard	/Q	TECHNICAL SPECIFICATIONS	NOTES
A	**V+**		Power supply 24 VDC	Input - power supply
B	**V0**		Power supply 0 VDC	Gnd - power supply
C	**AGND**		Analog ground	Gnd - analog signal
		ENABLE	Enable (24 VDC) or disable (0 VDC) the driver, referred to V0	Input - on/off signal
D	**INPUT+**		Reference input signal: ±10 VDC / ±20 mA maximum range Defaults are ±10 VDC for standard and 4 ÷ 20 mA for /I option	Input - analog signal **Software selectable**
E	**INPUT-**		Negative reference input signal for INPUT+	Input - analog signal
F	**MONITOR** referred to: AGND / V0		Monitor output signal: ±5 VDC maximum range Default is ± 5 VDC (1V = 1A)	Output - analog signal **Software selectable**
G	**EARTH**		Internally connected to driver housing	

19.2 Main connector signals - 12 pin (A2) /Z and /W options - for AEB-NP and AES

PIN	/Z	/W	TECHNICAL SPECIFICATIONS	NOTES
1	**V+**		Power supply 24 VDC	Input - power supply
2	**V0**		Power supply 0 VDC	Gnd - power supply
3	**ENABLE**		Enable (24 VDC) or disable (0 VDC) the driver, referred to VL0	Input - on/off signal
4	**INPUT+**		Reference input signal: ±10 VDC / ±20 mA maximum range Defaults are ±10 VDC for standard and 4 ÷ 20 mA for /I option	Input - analog signal **Software selectable**
5	**INPUT-**		Negative reference input signal for INPUT+	Input - analog signal
6	**MONITOR**		Monitor output signal: ±5 VDC maximum range, referred to VL0 Default is ± 5 VDC (1V = 1A)	Output - analog signal **Software selectable**
7	**NC**		Do not connect	
8	**NC**		Do not connect	
		MONITOR2	2nd monitor output signal: ±5 VDC maximum range, referred to VL0. Default is 0 ÷ 5 VDC	Output - analog signal
9	**VL+**		Power supply 24 VDC for driver's logic and communication	Input - power supply
10	**VL0**		Power supply 0 VDC for driver's logic and communication	Gnd - power supply
11	**FAULT**		Fault (0 VDC) or normal working (24 VDC), referred to VL0	Output - on/off signal
PE	**EARTH**		Internally connected to driver housing	

Note: do not disconnect VL0 before VL+ when the driver is connected to PC USB port

19.3 IO-Link connector signals - M12 - 5 pin - Coding A, port class B (A) only for AEB-IL

PIN	SIGNAL	TECHNICAL SPECIFICATIONS	NOTES
1	**L+**	Power supply 24 VDC for IO-Link communication	Input - power supply
2	**P24**	Power supply 24 VDC for valve regulation, logics and diagnostics	Input - power supply
3	**L-**	Power supply 0 VDC for IO-Link communication	Gnd - power supply
4	**C/Q**	IO-Link data line	Input / Output - signal
5	**N24**	Power supply 0 VDC for valve regulation, logics and diagnostics	Gnd - power supply

Note: L+, L- and P24, N24 are electrically isolated

19.4 Communication connectors - for AEB (B) and AES (B) - (C)

(B) **USB connector - M12 - 5 pin** always present

PIN	SIGNAL	TECHNICAL SPECIFICATION (1)
1	**+5V_USB**	Power supply
2	**ID**	Identification
3	**GND_USB**	Signal zero data line
4	**D-**	Data line -
5	**D+**	Data line +

(C1) **BC fieldbus execution, connector - M12 - 5 pin (2)**

PIN	SIGNAL	TECHNICAL SPECIFICATION (1)
1	**CAN_SHLD**	Shield
2	**NC**	do not connect
3	**CAN_GND**	Signal zero data line
4	**CAN_H**	Bus line (high)
5	**CAN_L**	Bus line (low)

(C2) **BP fieldbus execution, connector - M12 - 5 pin (2)**

PIN	SIGNAL	TECHNICAL SPECIFICATION (1)
1	**+5V**	Termination supply signal
2	**LINE-A**	Bus line (high)
3	**DGND**	Data line and termination signal zero
4	**LINE-B**	Bus line (low)
5	**SHIELD**	

(C3) (C4) **EH fieldbus execution, connector - M12 - 4 pin (2)**

PIN	SIGNAL	TECHNICAL SPECIFICATION (1)
1	**TX+**	Transmitter
2	**RX+**	Receiver
3	**TX-**	Transmitter
4	**RX-**	Receiver
Housing	**SHIELD**	

(1) Shield connection on connector's housing is recommended

(2) Only for **AES** execution

19.5 Remote pressure transducer connector - M12 - 5 pin - only for **/W** option - for **AEB** and **AES** (D)

PIN	SIGNAL	TECHNICAL SPECIFICATION	Voltage	Current
1	**VF +24V**	Power supply +24VDC	Connect	Connect
2	**TR**	Signal transducer maximum range ±10 VDC / ±20 mA, software selectable Defaults are 0 ÷ 10 VDC for standard and 4 ÷ 20 mA for /C option	Connect	Connect
3	**AGND**	Common GND for transducer power and signals	Connect	/
4	**NC**	Not Connect	/	/
5	**NC**	Not Connect	/	/

Remote pressure transducer connection - example

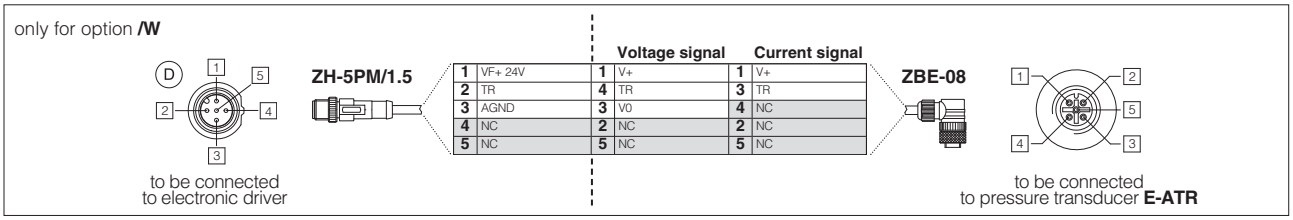

Note: connectors front view

19.6 Solenoid connection - only for **A**

PIN	SIGNAL	TECHNICAL SPECIFICATION	Connector code 666
1	**COIL**	Power supply	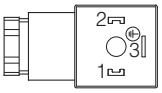
2	**COIL**	Power supply	
3	**GND**	Ground	

19.7 AEB-NP connections layout

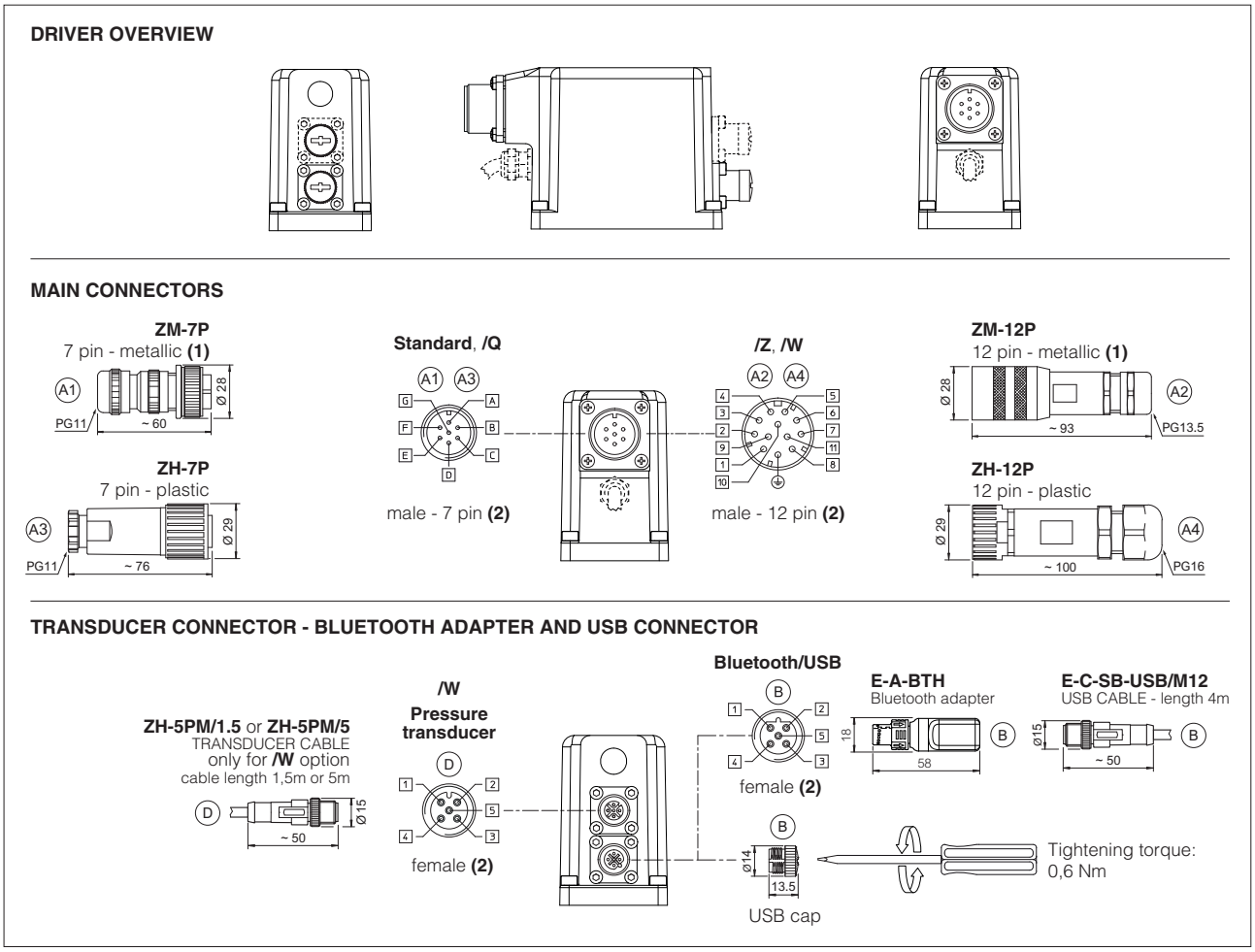

(1) Use of metallic connectors is strongly recommended in order to fulfill EMC requirements **(2)** Pin layout always referred to driver's view

19.8 AEB-IL connections layout

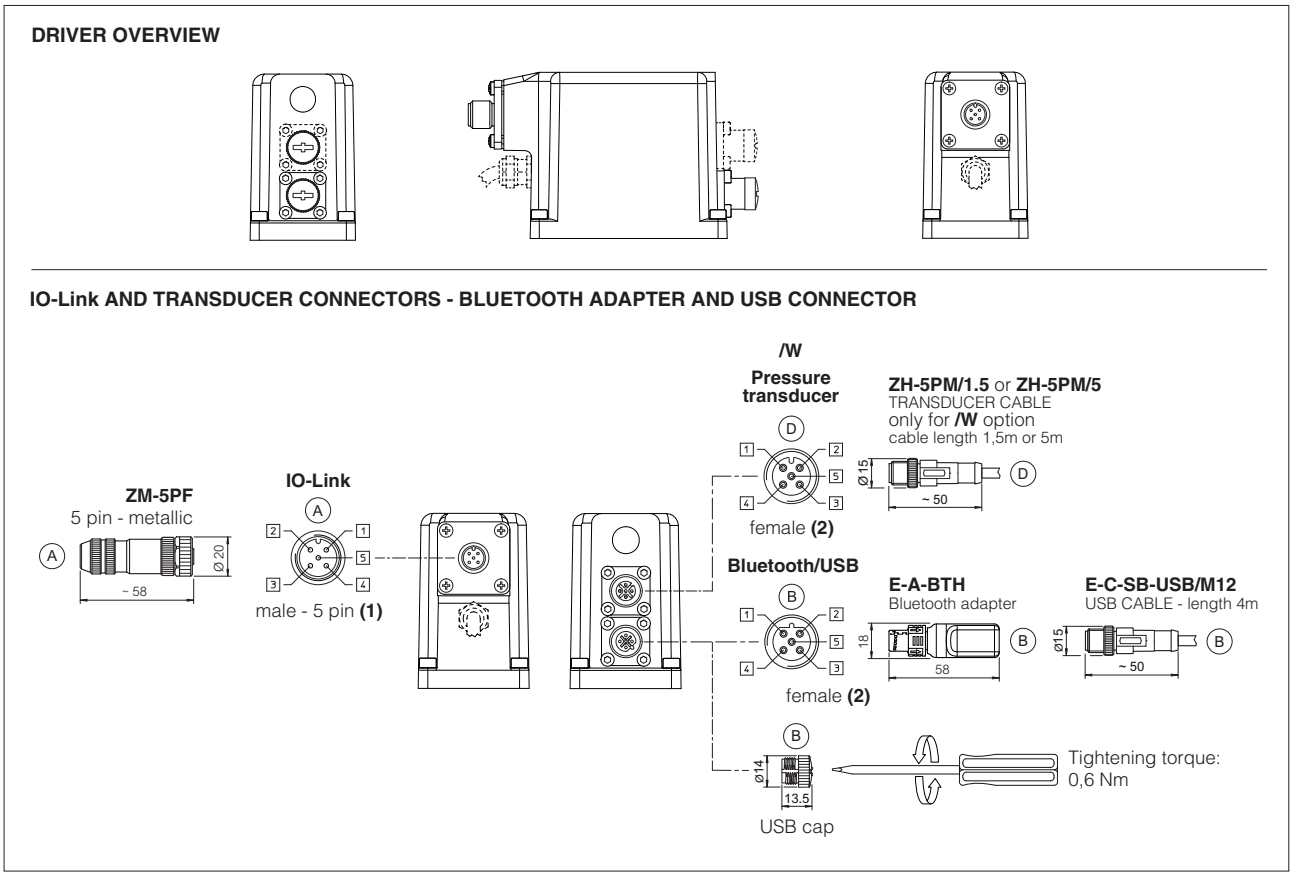

(1) Use of metallic connectors is strongly recommended in order to fulfill EMC requirements **(2)** Pin layout always referred to driver's view

19.9 AES connections layout

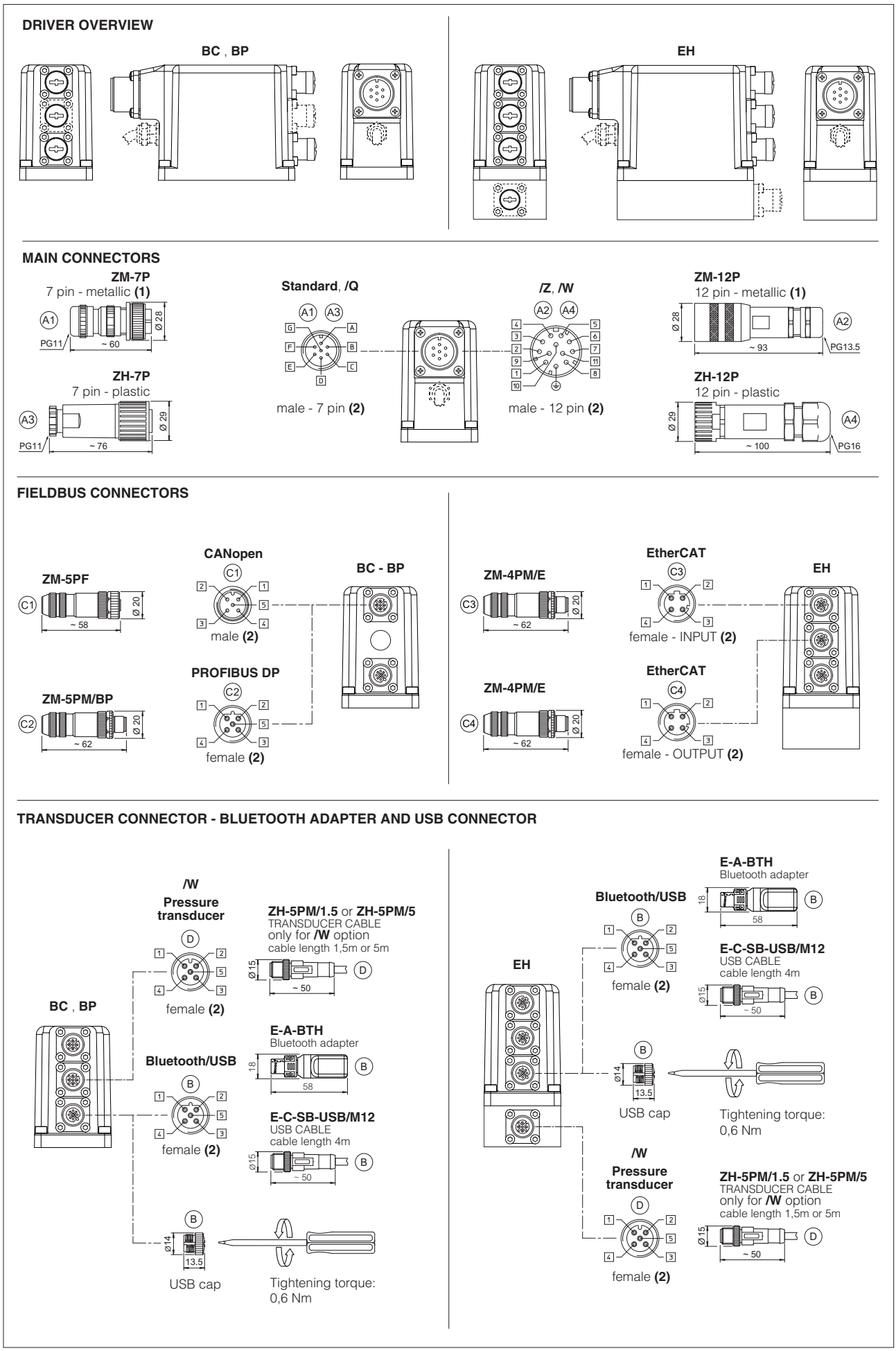

(1) Use of metallic connectors is strongly recommended in order to fulfill EMC requirements

(2) Pin layout always referred to driver's view

20 CONNECTORS CHARACTERISTICS - to be ordered separately

20.1 Main connectors - 7 pin - for AEB-NP and AES

CONNECTOR TYPE	POWER SUPPLY AND SIGNALS	POWER SUPPLY AND SIGNALS
CODE	A1 ZM-7P	A3 ZH-7P
Type	7pin female straight circular	7pin female straight circular
Standard	According to MIL-C-5015	According to MIL-C-5015
Material	Metallic	Plastic reinforced with fiber glass
Cable gland	PG11	PG11
Recommended cable	LiYCY 7 x 0,75 mm² max 20 m (logic and power supply) or LiYCY 7 x 1 mm² max 40 m (logic and power supply)	LiYCY 7 x 0,75 mm² max 20 m (logic and power supply) or LiYCY 7 x 1 mm² max 40 m (logic and power supply)
Conductor size	up to 1 mm² - available for 7 wires	up to 1 mm² - available for 7 wires
Connection type	to solder	to solder
Protection (EN 60529)	IP 67	IP 67

20.2 Main connectors - 12 pin - for AEB-NP and AES

CONNECTOR TYPE	POWER SUPPLY AND SIGNALS	POWER SUPPLY AND SIGNALS
CODE	A2 ZM-12P	A4 ZH-12P
Type	12pin female straight circular	12pin female straight circular
Standard	DIN 43651	DIN 43651
Material	Metallic	Plastic reinforced with fiber glass
Cable gland	PG13,5	PG16
Recommended cable	LiYCY 12 x 0,75 mm² max 20 m (logic and power supply)	LiYCY 10 x 0,14mm² max 40 m (logic) LiYY 3 x 1mm² max 40 m (power supply)
Conductor size	0,5 mm² to 1,5 mm² - available for 12 wires	0,14 mm² to 0,5 mm² - available for 9 wires 0,5 mm² to 1,5 mm² - available for 3 wires
Connection type	to crimp	to crimp
Protection (EN 60529)	IP 67	IP 67

20.3 IO-Link connector - only for AEB-IL

CONNECTOR TYPE	IL IO-Link
CODE	A ZM-5PF
Type	5pin female straight circular
Standard	M12 coding A – IEC 61076-2-101
Material	Metallic
Cable gland	Pressure nut - cable diameter 6÷8 mm
Recommended cable	5 x 0,75 mm² max 20 m
Connection type	screw terminal
Protection (EN 60529)	IP 67

20.4 Fieldbus communication connectors - only for AES

CONNECTOR TYPE	BC CANopen (1)		BP PROFIBUS DP (1)		EH EtherCAT (2)
CODE	C1 ZM-5PF	C2 ZM-5PM	C1 ZM-5PF/BP	C2 ZM-5PM/BP	C1 C2 ZM-4PM/E
Type	5 pin female straight circular	5 pin male straight circular	5 pin female straight circular	5 pin male straight circular	4 pin male straight circular
Standard	M12 coding A – IEC 61076-2-101		M12 coding B – IEC 61076-2-101		M12 coding D – IEC 61076-2-101
Material	Metallic		Metallic		Metallic
Cable gland	Pressure nut - cable diameter 6÷8 mm		Pressure nut - cable diameter 6÷8 mm		Pressure nut - cable diameter 4÷8 mm
Cable	CANbus Standard (DR 303-1)		PROFIBUS DP Standard		Ethernet standard CAT-5
Connection type	screw terminal		screw terminal		terminal block
Protection (EN 60529)	IP67		IP 67		IP 67

(1) E-TRM-** terminators can be ordered separately - see tech table **GS500**

(2) Internally terminated

20.5 Remote pressure transducer connectors - only for /W option

CONNECTOR TYPE	TRANSDUCER	
CODE	D1 ZH-5PM/1.5	D1 ZH-5PM/5
Type	5 pin male straight circular	
Standard	M12 coding A – IEC 61076-2-101	
Material	Plastic	
Cable gland	Connector moulded on cables 1,5 m length	5 m length
Cable	5 x 0,25 mm²	
Connection type	molded cable	
Protection (EN 60529)	IP 67	

21 INSTALLATION DIMENSIONS FOR DHZO [mm]

ISO 4401: 2005
Mounting surface: 4401-03-02-0-05 (see table P005)
(for /Y version, surface 4401-03-03-0-05 without X port)

	Mass [kg]		
	A	AEB, AES	AES-EH
DHZO-*-05	1,9	2,3	2,4
DHZO-*-07	2,6	3,1	3,2

DHZO-A-05

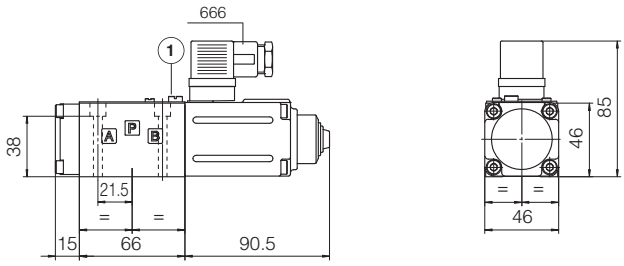

DHZO-A-07

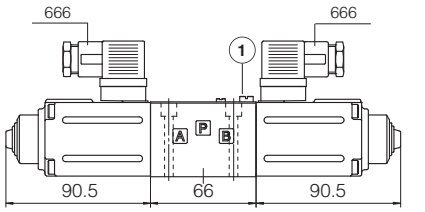

DHZO-AEB-NP-05
DHZO-AEB-IL-05

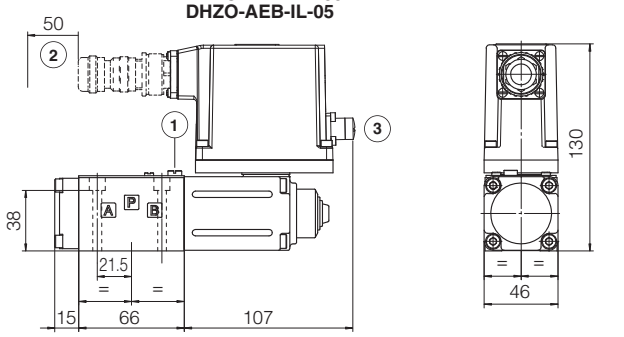

DHZO-AEB-NP-07
DHZO-AEB-IL-07

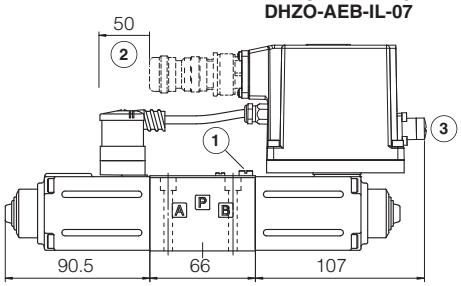

DHZO-AES-BC-05
DHZO-AES-BP-05

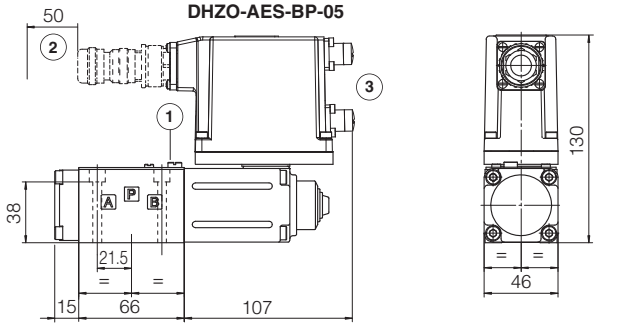

DHZO-AES-BC-07
DHZO-AES-BP-07

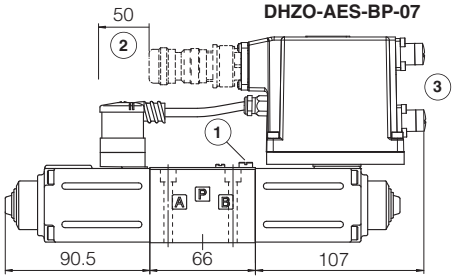

DHZO-AES-EH-05

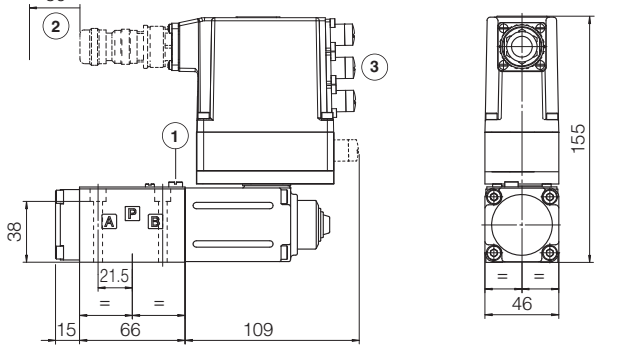

DHZO-AES-EH-07

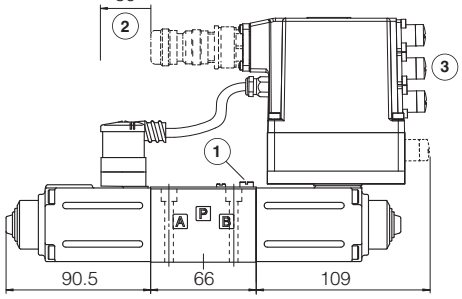

(1) = Air bleeding 3

(2) = Space required for connection cable and for connector removal

(3) = The dimensions of connectors and Bluetooth adapter must be considered, see section 19.7, 19.8 and 19.9

Note: for /B option the solenoid and the on-board digital driver are at side of port A

22 INSTALLATION DIMENSIONS FOR DKZOR [mm]

ISO 4401: 2005
Mounting surface: 4401-05-04-0-05 (see table P005)
(for /Y version, surface 4401-05-05-0-05 without X port)

	Mass [kg]		
	A	AEB, AES	AES-EH
DKZOR-*-15	3,8	4,3	4,4
DKZOR-*-17	4,5	5,0	5,1

DKZOR-A-15

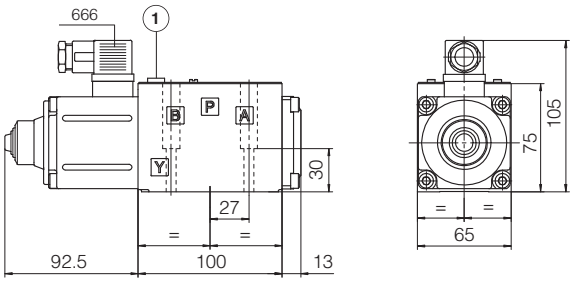

DKZOR-A-17

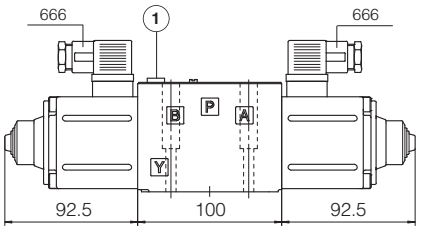

DKZOR-AEB-NP-15
DKZOR-AEB-IL-15

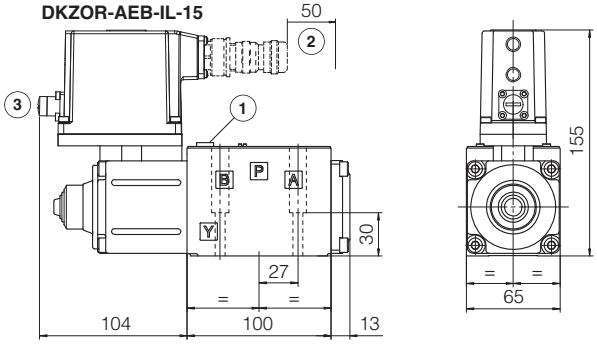

DKZOR-AEB-NP-17
DKZOR-AEB-IL-17

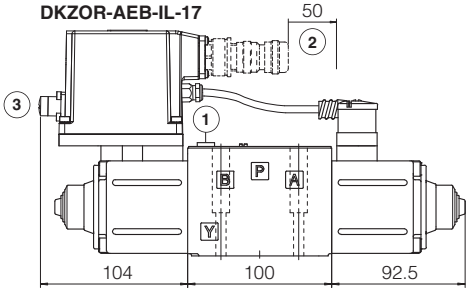

DKZOR-AES-BC-15
DKZOR-AES-BP-15

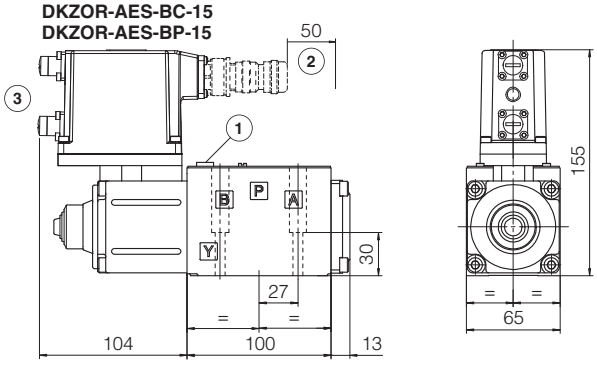

DKZOR-AES-BC-17
DKZOR-AES-BP-17

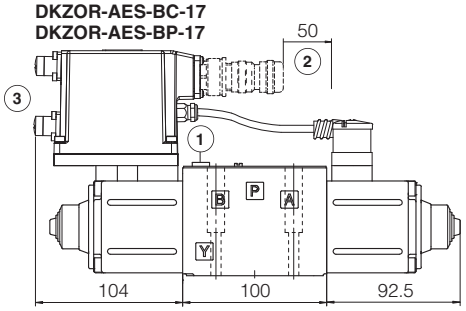

DKZOR-AES-EH-15

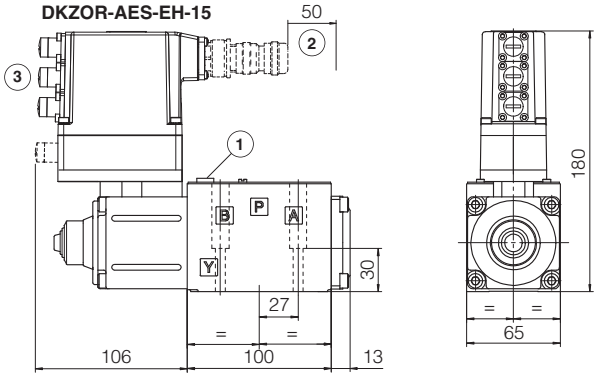

DKZOR-AES-EH-17

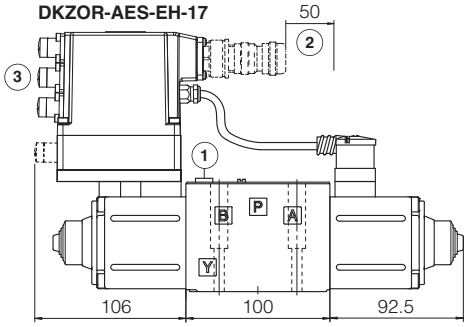

(1) = Air bleeding 3

(2) = Space required for connection cable and for connector removal

(3) = The dimensions of connectors and Bluetooth adapter must be considered, see section 19.7, 19.8 and 19.9

Note: for /B option the solenoid and the on-board digital driver are at side of port A

23 FASTENING BOLTS AND SEALS

	DHZO	DKZOR
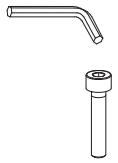	**Fastening bolts:** 4 socket head screws M5x50 class 12.9 Tightening torque = 8 Nm	**Fastening bolts:** 4 socket head screws M6x40 class 12.9 Tightening torque = 15 Nm
	Seals: 4 OR 108 Diameter of ports A, B, P, T: Ø 7,5 mm (max) 1 OR 2025 Diameter of port Y: Ø 3,2 mm (only for /Y option)	**Seals:** 5 OR 2050 Diameter of ports A, B, P, T: Ø 11,2 mm (max) 1 OR 108 Diameter of port Y: Ø 5 mm (only for /Y option)

24 RELATED DOCUMENTATION

FS001	Basics for digital electrohydraulics	**K800**	Electric and electronic connectors
FS900	Operating and maintenance information for proportional valves	**P005**	Mounting surfaces for electrohydraulic valves
G010	E-MI-AC analog driver	**QB100**	Quickstart for AEB valves commissioning
G020	E-MI-AS-IR digital driver	**QF100**	Quickstart for AES valves commissioning
G030	E-BM-AS digital driver	**E-MAN-MI-AS**	E-MI-AS-IR user manual (off-board)
GS050	E-BM-AES digital driver	**E-MAN-BM-AS**	E-BM-AS user manual (off-board)
GS500	Programming tools	**E-MAN-BM-AES**	E-BM-AES user manual (off-board)
GS510	Fieldbus	**E-MAN-RI-AEB**	AEB user manual
GS520	IO-Link interface	**E-MAN-RI-AES**	AES user manual

Proportional directional valves

direct, without transducer

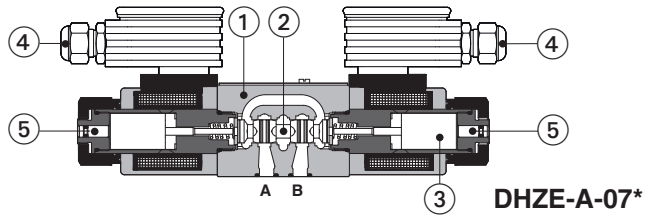

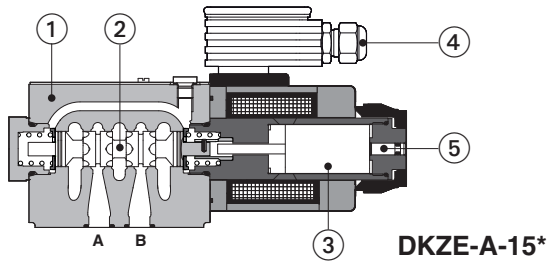

① Valve body
② Spool
③ Proportional solenoid
④ E-MI-AS-IR digital driver (to be ordered separately)
⑤ Manual override

DHZE-A, DKZE-A

Proportional directional valves without position transducer and with positive spool overlap, for open loop directional controls and not compensated flow regulations.

They operate in association with off-board driver, which supply the proportional valves with proper current to align the valve regulation to the reference signal supplied to the driver.

Spool regulation characteristics:
L =linear
S = progressive
D = differential-progressive

Valve body characteristics:
3 chambers type for DHZE
5 chambers type for DKZE

The solenoids are certified according to North American standard **cURus**.

DHZE:	**DKZE**:
Size: **06** - ISO 4401	Size: **10** - ISO 4401
Max flow: **65 l/min**	Max flow: **130 l/min**
Max pressure: **350 bar**	Max pressure: **315 bar**

1 MODEL CODE

DHZE	-	A	-	0	71	-	S	5	/	*	-	*	/	*	*	/	*

DHZE = size 06
DKZE = size 10

A = for off-board driver, see section 2

Valve size ISO 4401:
0 = 06 **1** = 10

Configuration:

Standard | Option **/B**

51 =
53 =
71 =
73 =

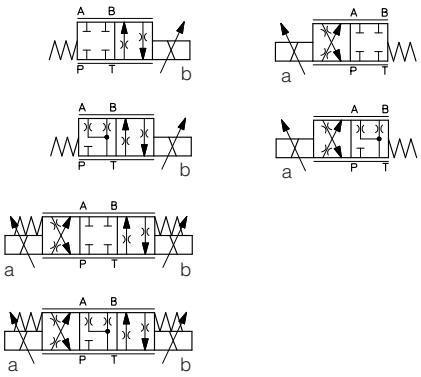

Spool type, regulating characteristics:

L = linear | **S** = progressive | **D** = differential-progressive

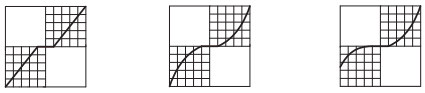

P-A = Q, B-T = Q/2
P-B = Q/2, A-T = Q

(1) Only for **DHZE** with spool type S3, S5, D3, D5, L3, L5

Hydraulic options:
B = solenoid at side of port A (only for valve configuration 5)

Hand lever options (1):
MO = horizontal hand lever
MV = vertical hand lever
BMO = horizontal hand lever installed at side of port A
BMV = vertical hand lever installed at side of port A

Coil with special connectors, see section 12 :
- = omit for standard DIN connector
J = AMP Junior Timer connector
K = Deutsch connector
S = Lead Wire connection

Coil voltage, see section 10 :
- = standard coil for 24 VDC Atos drivers
6 = optional coil for 12 VDC Atos drivers
18 = optional coil for low current drivers

Series number

Seals material, see section 7 :
- = NBR
PE = FKM
BT = HNBR

Spool size:	**14** (L)	**1** (L)	**3** (L,S,D)	**5** (L,S,D)	**9** (L)
DHZE =	1	4,5	17	28	45
DKZE =	-	-	45	60	-

Nominal flow (l/min) at Δp 10 bar P-T

2 OFF-BOARD ELECTRONIC DRIVERS

Drivers model	E-MI-AC-01F		E-MI-AS-IR		E-BM-AS-PS		E-BM-AES
Type	Analog		Digital				
Voltage supply (VDC)	12	24	12	24	12	24	24
Valve coil option	/6	std	/6	std	/6	std	std
Format	plug-in to solenoid				DIN-rail panel		
Tech table	G010		G020		G030		GS050

3 GENERAL NOTES

Atos digital proportionals valves are CE marked according to the applicable directives (e.g. Immunity and Emission EMC Directive).
Installation, wirings and start-up procedures must be performed according to the general prescriptions shown in tech table **FS900** and in the installation notes supply with relevent components.

4 GENERAL CHARACTERISTICS

Assembly position	Any position
Subplate surface finishing to ISO 4401	Acceptable roughness index: Ra ≤ 0,8, recommended Ra 0,4 – Flatness ratio 0,01/100
MTTFd valves according to EN ISO 13849	150 years, see technical table P007
Ambient temperature range	**Standard** = -20°C ÷ +70°C **/PE** option = -20°C ÷ +70°C **/BT** option = -40°C ÷ +60°C
Storage temperature range	**Standard** = -20°C ÷ +80°C **/PE** option = -20°C ÷ +80°C **/BT** option = -40°C ÷ +70°C
Surface protection	Zinc coating with black passivation
Corrosion resistance	Salt spray test (EN ISO 9227) > 200 h
Conformity	CE according to EMC directive 2014/30/EU (Immunity: EN 61000-6-2; Emission: EN 61000-6-3) RoHS Directive 2011/65/EU as last update by 2015/863/EU REACH Regulation (EC) n°1907/2006

5 HYDRAULIC CHARACTERISTICS

Valve model	**DHZE**					**DKZE**	
Pressure limits [bar]	ports **P, A, B** = 350; **T** = 210					ports **P, A, B** = 315; **T** = 210	
Spool type and size	**L14**	**L1**	**S3, L3, D3**	**S5, L5, D5**	**L9**	**S3, L3, D3**	**S5, L5, D5**
Nominal flow **(1)** [l/min]							
at Δp = 10 bar (P-T)	1	4,5	18	28	45	45	60
at Δp = 30 bar (P-T)	1,7	8	30	50	65	80	105
max permissible flow	see operating limits, section 8.2						
Response time **(2)** [ms]	≤ 30					≤ 40	
Hysteresis [%]	5 [% of max regulation]						
Repeatability [%]	± 1 [% of max regulation]						

Note: above performance data refer to valves coupled with Atos electronic drivers, see section 2;
the flow regulated by the directional proportional valves is not pressure compensated, thus it is affected by the load variations;
to keep costant the regulated flow under different load conditions, modular pressure compensators are available - see tech. table D150

(1) For different Δp, the max flow is in accordance to the diagrams in sections 8.2 and 9.2
(2) 0-100% step signal

6 ELECTRICAL CHARACTERISTICS

Valve model	**DHZE**			**DKZE**		
Coil voltage code	standard	option /6	option /18	standard	option /6	option /18
Max. solenoid current	2,7 A	3 A	1,2 A	2,2 A	2,65 A	1 A
Coil resistance R at 20°C	3,1 Ω	2,1 Ω	13,1 Ω	3,2 Ω	2,1 Ω	13,7 Ω
Insulation class	H (180°) Due to the occuring surface temperatures of the solenoid coils, the European standards ISO 13732-1 and EN982 must be taken into account					
Protection degree to DIN EN60529	IP65 with mating connectors					
Duty factor	Continuous rating (ED=100%)					
Certification	**cURus** North American Standard					

7 SEALS AND HYDRAULIC FLUIDS - for other fluids not included in below table, consult our technical office

Seals, recommended fluid temperature	NBR seals (standard) = -20°C ÷ +80°C, with HFC hydraulic fluids = -20°C ÷ +50°C FKM seals (/PE option) = -20°C ÷ +80°C HNBR seals (/BT option) = -40°C ÷ +60°C, with HFC hydraulic fluids = -40°C ÷ +50°C		
Recommended viscosity	20 ÷ 100 mm²/s - max allowed range 15 ÷ 380 mm²/s		
Max fluid contamination level — normal operation	ISO4406 class 18/16/13 NAS1638 class 7		see also filter section at www.atos.com or KTF catalog
Max fluid contamination level — longer life	ISO4406 class 16/14/11 NAS1638 class 5		
Hydraulic fluid	**Suitable seals type**	**Classification**	**Ref. Standard**
Mineral oils	NBR, FKM, HNBR	HL, HLP, HLPD, HVLP, HVLPD	DIN 51524
Flame resistant without water	FKM	HFDU, HFDR	ISO 12922
Flame resistant with water	NBR, HNBR	HFC	

8 DIAGRAMS FOR DHZE (based on mineral oil ISO VG 46 at 50 °C)

8.1 Regulation diagrams

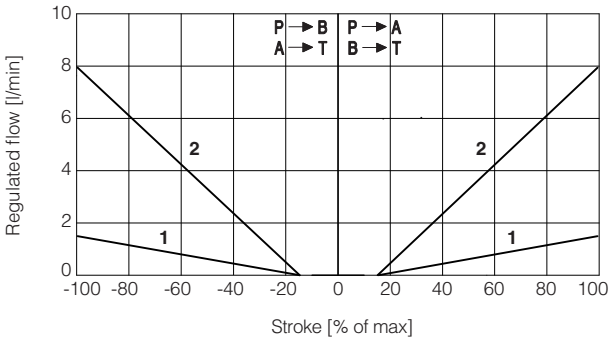

DHZE
1 = L14 **2** = L1

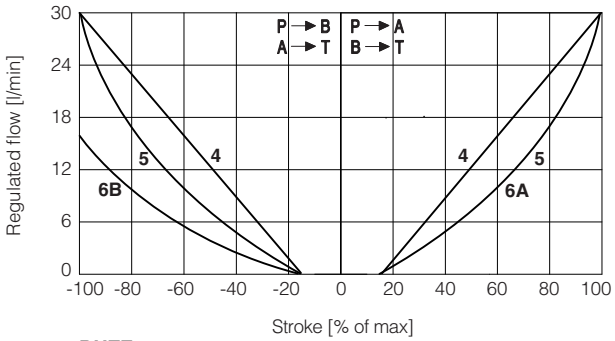

DHZE
4 = L3 **6A** = D3 (P → A, A → T)
5 = S3 **6B** = D3 (P → B, B → T)

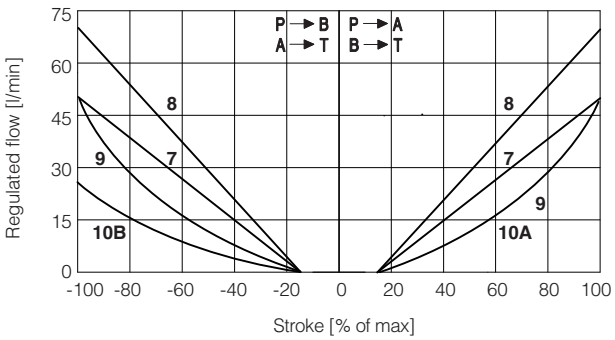

DHZE
7 = L5 **9** = S5 **10A** = D5 (P → A, A → T)
8 = L9 **10B** = D5 (P → B, B → T)

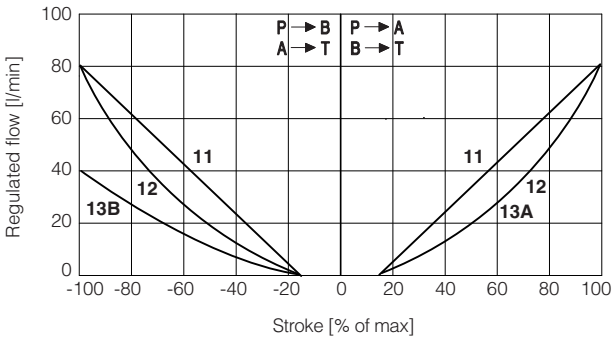

DKZE
11 = L3 **13A** = D3 (P → A, A → T)
12 = S3 **13B** = D3 (P → B, B → T)

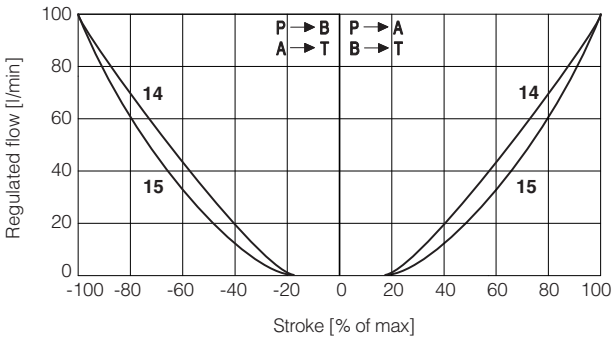

DKZE
14 = L5 **15** = S5

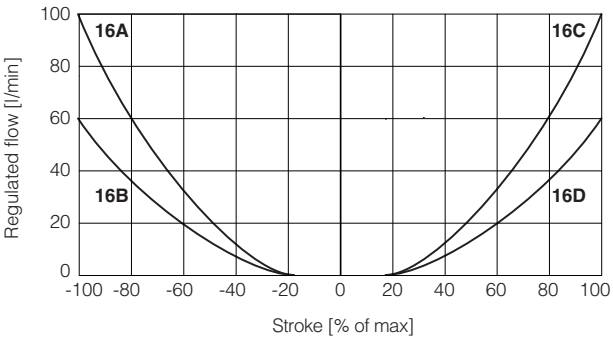

DKZE
16A = D5 (A → T) **16C** = D5 (P → A)
16B = D5 (P → B) **16D** = D5 (B → T)

Note: Hydraulic configuration vs. reference signal for configuration 71 and 73 (standard and option /B)

Reference signal 0 ÷ +10 V / 12 ÷ 20 mA } P → A / B → T

Reference signal 0 ÷ - 10 V / 12 ÷ 4 mA } P → B / A → T

8.2 Operating limits

DHZE

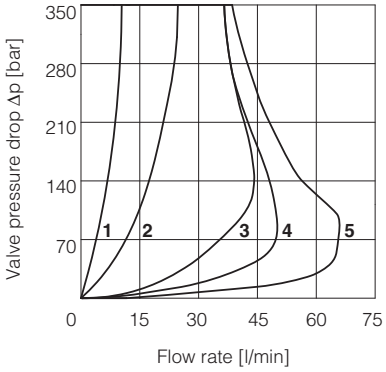

1 = spool L14
2 = spool L1
3 = spool L3, S3, D3
4 = spool L5, S5, D5
5 = spool L9

DKZE

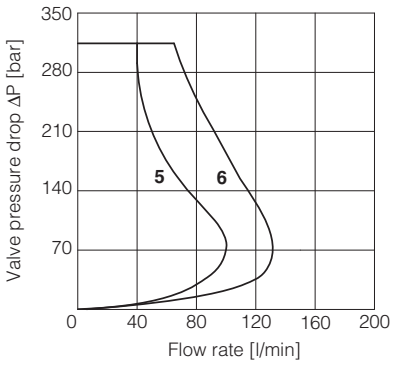

5 = spool S3, L3, D3
6 = spool S5, L5, D5

9 HYDRAULIC OPTIONS

B = DHZE-05 and DKZE-15 = solenoid at side of port A of the main stage.
DHZO-07 and DKZE-17 = E-MI-AS-IR electronics at side of port A of the main stage.

Hand lever option - only for **DHZE** with spool type S3, S5, D3, D5, L3, L5.

It allows to operate the valve in absence of electrical power supply.
For detailed description of DHZE with hand lever option see tech. table **E138**.

MO = Horizontal hand lever

BMO = Horizontal hand lever installed at side of port A

MV = Vertical hand lever

BMV = Vertical hand lever installed at side of port A

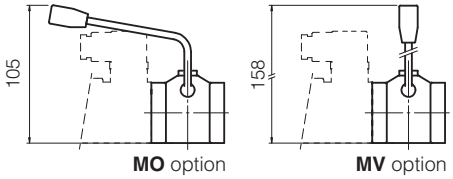

10 COIL VOLTAGE OPTIONS

6 = Optional coil to be used with Atos drivers with power supply 12 VDC.

18 = Optional coil to be used with electronic drivers not supplied by Atos.

11 OPERATION AS THROTTLE VALVE

Single solenoid valves
DHZE-A-051 and DKZE-A-151
can be used as simple throttle valves:
Pmax = 210 bar

Max flow Δp= 15bar [l/min]	SPOOL TYPE					
	L14	**L1**	**L3**	**S3**	**L5**	**S5**
DHZE	4	16	60		100	
DKZE	-	-	160		200	

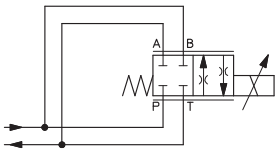

12 COILS WITH SPECIAL CONNECTORS

J option

Coil type COZEJ (DHZE)
Coil type CAZEJ (DKZE)
AMP Junior Timer connector
Protection degree IP67

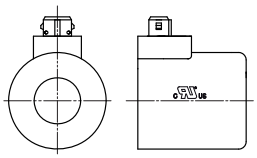

K option

Coil type COZEK (DHZE)
Coil type CAZEK (DKZE)
Deutsch connector, DT-04-2P male
Protection degree IP67

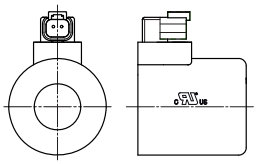

S option

Coil type COZES (DHZE)
Coil type CAZES (DKZE)
Lead Wire connection
Cable lenght = 180 mm

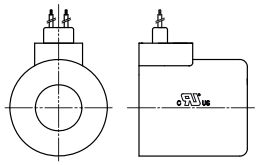

13 SOLENOID CONNECTION

PIN	SIGNAL	TECHNICAL SPECIFICATION	Connector code 666
1	**COIL**	Power supply	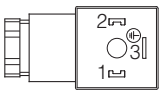
2	**COIL**	Power supply	
3	**GND**	Ground	

14 FASTENING BOLTS AND SEALS

	DHZE	DKZE
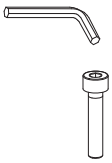	**Fastening bolts:** 4 socket head screws M5x30 class 12.9 Tightening torque = 8 Nm	**Fastening bolts:** 4 socket head screws M6x40 class 12.9 Tightening torque = 15 Nm
	Seals: 4 OR 108 Diameter of ports A, B, P, T: Ø 7,5 mm (max)	**Seals:** 5 OR 2050 Diameter of ports A, B, P, T: Ø 11,2 mm (max)

15 INSTALLATION DIMENSIONS FOR DHZE [mm]

ISO 4401: 2005
Mounting surface: 4401-03-02-0-05 (see table P005)

Mass [kg]	
DHZE-A-05	1,5
DHZE-A-07	2
DHZE-A-05 with E-MI-AS-IR	2
DHZE-A-07 with E-MI-AS-IR	3

DHZE-A-05

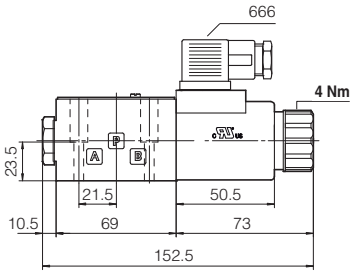

DHZE-A-07

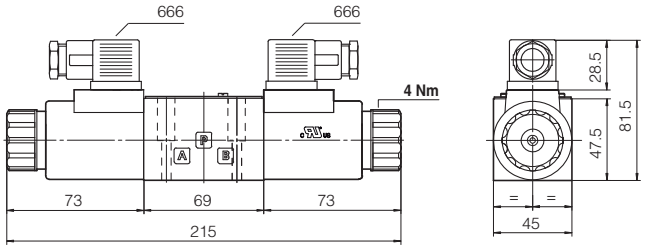

DHZE-A-05 with E-MI-AS-IR digital driver

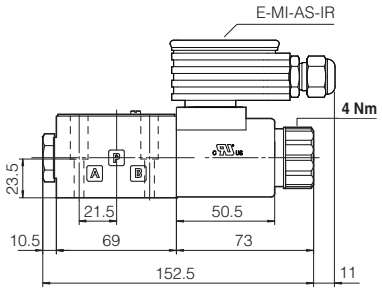

DHZE-A-07 with E-MI-AS-IR digital drivers

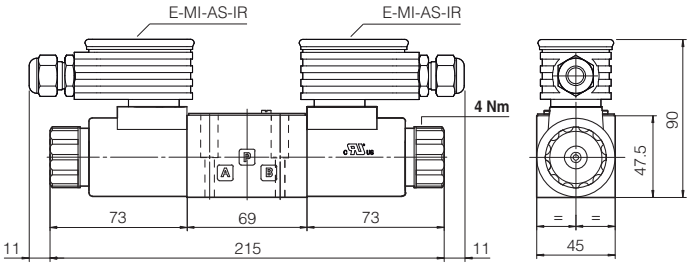

Note: for option /B the solenoid is at side of port A (only for DHZE-A-05 and DKZE-A-15)

16 INSTALLATION DIMENSIONS FOR DKZE [mm]

ISO 4401: 2005
Mounting surface: 4401-05-04-0-05 (see table P005)

Mass [kg]	
DKZE-A-15	4,5
DKZE-A-17	6,1
DKZE-A-15 with E-MI-AS-IR	5
DKZE-A-17 with E-MI-AS-IR	7,1

DKZE-A-15

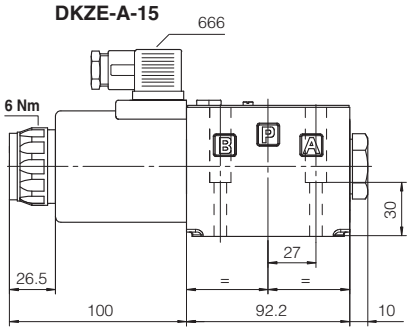

DKZE-A-17

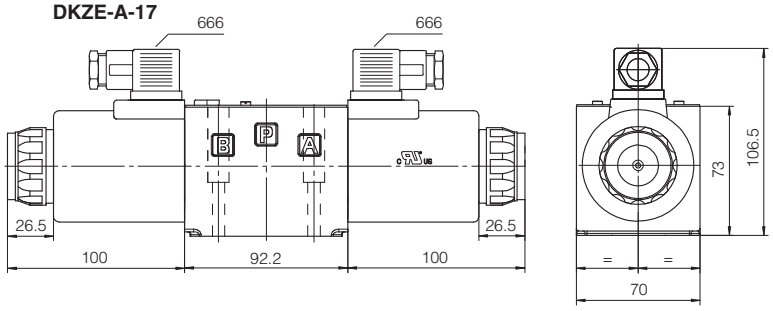

DKZE-A-15 with E-MI-AS-IR digital driver

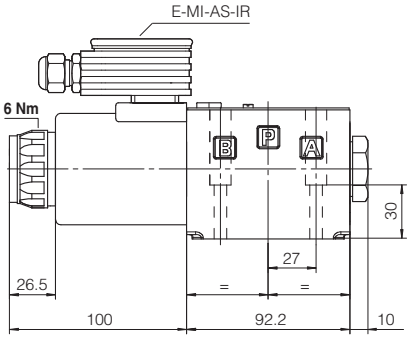

DKZE-A-17 with E-MI-AS-IR digital drivers

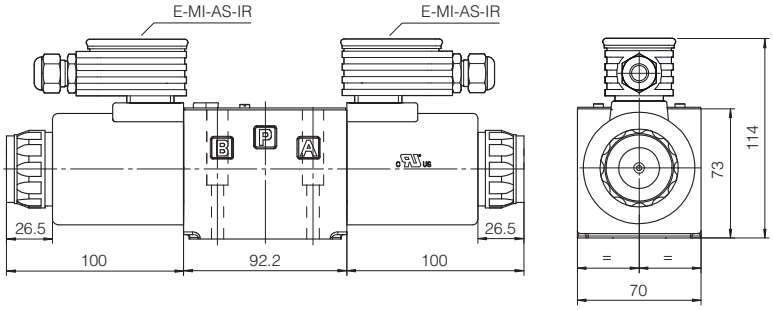

Note: for option /B the solenoid is at side of port A (only for DHZE-A-05 and DKZE-A-15)

17 RELATED DOCUMENTATION

FS001	Basics for digital electrohydraulics	**GS500**	Programming tools
FS900	Operating and maintenance information for proportional valves	**GS510**	Fieldbus
G010	E-MI-AC analog driver	**K800**	Electric and electronic connectors
G020	E-MI-AS-IR digital driver	**P005**	Mounting surfaces for electrohydraulic valves
G030	E-BM-AS digital driver		
GS050	E-BM-AES digital driver		

Digital proportional directional valves

piloted, without transducer, with positive spool overlap

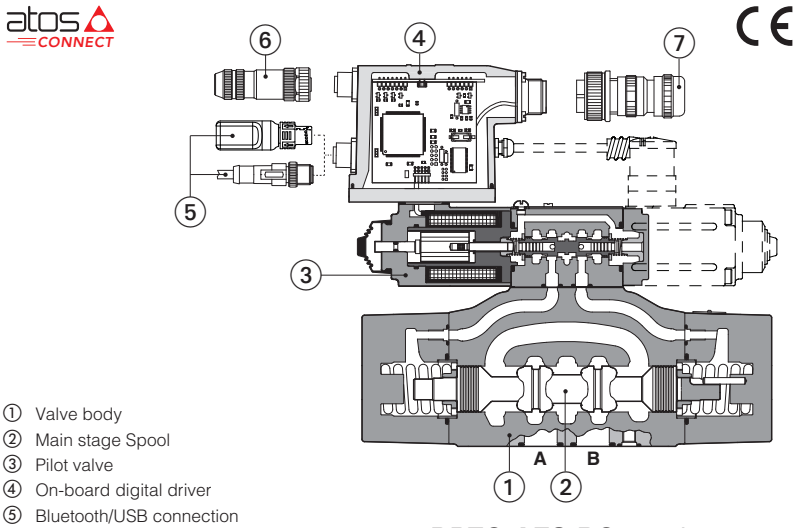

① Valve body
② Main stage Spool
③ Pilot valve
④ On-board digital driver
⑤ Bluetooth/USB connection
⑥ Fieldbus connector
⑦ Main connector

DPZO-AES-BC-251-*
DPZO-AES-BC-271-* (dotted line)

DPZO-A, DPZO-AEB, DPZO-AES

Digital proportional valves without position transducer and with positive spool overlap, for open loop directional controls and not compensated flow regulations.

A to be coupled with off-board drivers.

AEB basic execution, with on-board digital driver, with analog reference signal or IO-Link interface for digital reference signal, valve settings, and real-time diagnostics.

AES full execution, with on-board digital driver which includes also fieldbus interfaces for digital reference signal, valve settings, and real-time diagnostics.

For **AEB** and **AES**, Bluetooth/USB connection is always present for valve settings via mobile App and Atos PC software.

Size: **10** ÷ **32** - ISO 4401
Max flow: **180** ÷ **1500 l/min**
Max pressure: **350 bar**

1 MODEL CODE

DPZO	-	AES	-	BC	-	2	71	-	L	5	/	*	/	*	/	*	*	/	*

Proportional directional valve, piloted

A = off-board driver, see section 2
AEB = basic on-board digital driver
AES = full on-board digital driver

IO-Link interface, only for AEB, see section 6 :
NP = Not present **IL** = IO-Link

Fieldbus interfaces, only for AES, see section 7 :
BC = CANopen **EH** = EtherCAT
BP = PROFIBUS DP

Valve size ISO 4401:
1 = 10 **2** = 16 **4** = 25 **6** = 32

Configuration (1):

	Standard	Option **/B**
51 =	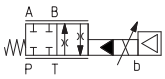	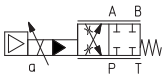
53 =	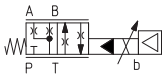	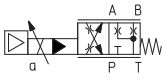
71 =	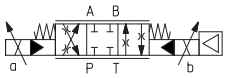	
73 =	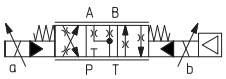	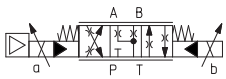

Spool type, regulating characteristics, see section 12 :
L = linear **S** = progressive **D** = differential-progressive
P-A = Q, B-T = Q/2
P-B = Q/2, A-T = Q

(1) Hydraulic symbols are represented with on-board digital driver

Series number

Seals material, see section 11 :
- = NBR
PE = FKM
BT = NBR low temp.

Coil voltage, only for **A** - see section 16 :
- = standard coil for 24VDC Atos drivers
6 = optional coil for 12VDC Atos drivers
18 = optional coil for low current drivers

Bluetooth option, only for **AEB** and **AES (1)**, see section 5 :
T = Bluetooth adapter supplied with the valve

Hydraulic options (2):
B = solenoid and on-board digital driver at side of port B of the main stage (side A of pilot valve)
D = internal drain
E = external pilot pressure
G = pressure reducing valve for piloting

Electronic options, only for **AEB** and **AES (2) (3)**:
C = current feedback for pressure transducer 4÷20 mA (only for **W**)
I = current reference input 4÷20 mA
Q = enable signal
Z = double power supply, enable, fault and monitor signals -12 pin connector
W = power limitation function

Spool size:	**3** (L,S,D)	**5** (L,S,D)
DPZO-1 =	-	100
DPZO-2 =	160	250
DPZO-4 =	-	480
DPZO-6 =	-	640

Nominal flow (l/min) at Δp 10bar P-T (see section 9)

(2) For possible combined options, see section 15
(3) /I, /Q, /Z options not available for AEB-IL

2 OFF-BOARD ELECTRONIC DRIVERS - only for **A**

Drivers model	E-MI-AC-01F		E-MI-AS-IR		E-BM-AS-PS		E-BM-AES
Type	Analog		Digital				
Voltage supply (VDC)	12	24	12	24	12	24	24
Valve coil option	/6	std	/6	std	/6	std	std
Format	plug-in to solenoid				DIN-rail panel		
Tech table	G010		G020		G030		GS050

3 GENERAL NOTES

Atos digital proportionals valves are CE marked according to the applicable directives (e.g. Immunity and Emission EMC Directive).
Installation, wirings and start-up procedures must be performed according to the general prescriptions shown in tech table **FS900** and in the user manuals included in the E-SW-SETUP programming software.

4 VALVE SETTINGS AND PROGRAMMING TOOLS - see tech. table **GS500**

4.1 Atos CONNECT mobile App

Free downloadable App for smartphones and tablets which allows quick access to valve main functional parameters and basic diagnostic information via Bluetooth, thus avoiding physical cable connection and significantly reducing commissioning time.
Atos CONNECT supports Atos digital valve drivers equipped with E-A-BTH adapter or with built-in Bluetooth. It does not support valves with p/Q control or axis controls.

Download on the App Store

GET IT ON Google Play

4.2 E-SW-SETUP PC software

Free downloadable software for PC allows to set all valve functional parameters and to access complete diagnostic information of digital valve drivers via Bluetooth/USB service port.
Atos E-SW-SETUP PC software supports all Atos digital valve drivers and it is available at www.atos.com in MyAtos area.

WARNING: drivers USB port is not isolated! For E-C-SB-USB/M12 cable, the use of E-A-SB-USB/OPT isolator adapter is highly recommended for PC protection

Bluetooth or USB connection

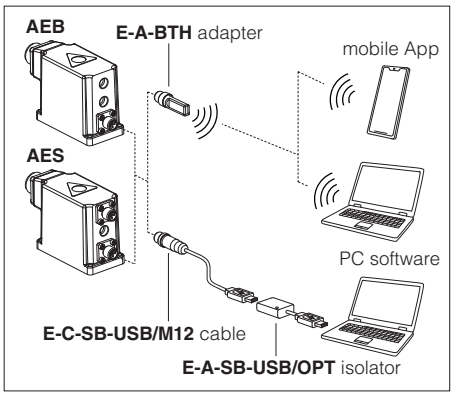

5 BLUETOOTH OPTION - see tech. table **GS500**

T option adds Bluetooth® connectivity to Atos valve drivers thanks to E-A-BTH adapter, which can be left permanently installed on-board, to allow the Bluetooth connection with the valve drivers at any time. E-A-BTH adapter can also be purchased separately and used to connect with any supported Atos digital product.
Bluetooth connection to the valve can be protected against unauthorised access by setting a personal password. The adapter leds visually indicates the status of valve driver and Bluetooth connection.

WARNING: for the list of countries where the Bluetooth adapter has been approved, see tech. table **GS500**
T option is not available for the Indian market, so the Bluetooth adapter must be ordered separately.

6 IO-LINK - only for **AEB**, see tech. table **GS520**

IO-Link allows low cost digital communication between the valve and machine central unit. The valve is directly connected to a port of an IO-Link master (point-to-point connection) via low-cost unshielded cables for digital reference, diagnostic and settings. The IO-Link master works as a hub exchanging this information with the machine central unit via fieldbus.

7 FIELDBUS - only for **AES**, see tech. table **GS510**

Fieldbus allows valve direct communication with machine control unit for digital reference, valve diagnostics and settings. These execution allow to operate the valves through fieldbus or analog signals available on the main connector.

8 GENERAL CHARACTERISTICS

Assembly position	Any position
Subplate surface finishing to ISO 4401	Acceptable roughness index: Ra ≤ 0,8, recommended Ra 0,4 – Flatness ratio 0,01/100
MTTFd valves according to EN ISO 13849	75 years, for further details see technical table P007
Ambient temperature range	**A:** **Standard** = -20°C ÷ +70°C **/PE** option = -20°C ÷ +70°C **/BT** option = -40°C ÷ +60°C **AEB, AES:** **Standard** = -20°C ÷ +60°C **/PE** option = -20°C ÷ +60°C **/BT** option = -40°C ÷ +60°C
Storage temperature range	**A:** **Standard** = -20°C ÷ +80°C **/PE** option = -20°C ÷ +80°C **/BT** option = -40°C ÷ +70°C **AEB, AES:** **Standard** = -20°C ÷ +70°C **/PE** option = -20°C ÷ +70°C **/BT** option = -40°C ÷ +70°C
Surface protection	Zinc coating with black passivation, galvanic treatment (driver housing for AEB and AES)
Corrosion resistance	Salt spray test (EN ISO 9227) > 200 h
Vibration resistance	See technical table G004 (for AEB and AES)
Compliance	CE according to EMC directive 2014/30/EU (Immunity: EN 61000-6-2; Emission: EN 61000-6-3) RoHS Directive 2011/65/EU as last update by 2015/863/EU REACH Regulation (EC) n°1907/2006

9 HYDRAULIC CHARACTERISTICS - based on mineral oil ISO VG 46 at 50 °C

Valve model	DPZO-*-1	DPZO-*-2		DPZO-*-4	DPZO-*-6
Pressure limits [bar]	ports **P**, **A**, **B**, **X** = 350; **T** = 250 (10 with internal drain /D) **Y** = 10				
Spool type and size	**L5, S5, D5**	**L3, S3, D3**	**L5, S5, D5**		
Nominal flow Δp P-T [l/min] **(1)** Δp= 10 bar	100	160	250	480	640
Δp= 30 bar	160	270	430	830	1100
Max permissible flow	180	400	550	900	1500
Piloting pressure [bar]	min = 25; max = 350 (option /G advisable for pilot pressure > 150 bar)				
Piloting volume [cm³]	1,4	3,7		9,0	21,6
Piloting flow **(2)** [l/min]	1,7	3,7		6,8	14,4
Leakage **(3)** [l/min]	0,15 / 0,5	0,2 / 0,6		0,3 / 1,0	1,0 / 3,0
Response time **(4)** [ms]	≤ 80	≤ 100		≤ 120	≤ 180
Hysteresis	≤ 5 [% of max regulation]				
Repeatibility	± 1 [% of max regulation]				

Note: above performance data refer to valves coupled with Atos electronic drivers, see section 2

(1) For different Δp, the max flow is in accordance to the diagrams in section 12.2
(2) With step reference input signal 0 ÷100 %
(3) At p = 100/350 bar
(4) 0-100% step signal

10 ELECTRICAL CHARACTERISTICS

Power supplies	Nominal : +24 VDC Rectified and filtered : VRMS = 20 ÷ 32 VMAX (ripple max 10 % VPP)				
Max power consumption	**A** = 30 W **AEB**, **AES** = 50 W				
Coil voltage code	standard		option /6		option /18
Max. solenoid current	2,2 A		2,75 A		1 A
Coil resistance R at 20°C	3 ÷ 3,3 Ω		2 ÷ 2,2 Ω		13 ÷ 13,4 Ω
Analog input signals	Voltage: range ±10 VDC (24 VMAX tolerant) Input impedance: Ri > 50 kΩ Current: range ±20 mA Input impedance: Ri = 500 Ω				
Monitor output	Output range: voltage ±5 VDC @ max 5 mA				
Enable input	Range: 0 ÷ 9 VDC (OFF state), 15 ÷ 24 VDC (ON state), 9 ÷ 15 VDC (not accepted); Input impedance: Ri > 87 kΩ				
Fault output	Output range : 0 ÷ 24 VDC (ON state ≅ VL+ [logic power supply] ; OFF state ≅ 0 V) @ max 50 mA; external negative voltage not allowed (e.g. due to inductive loads)				
Pressure transducer power supply (only for /W option)	+24VDC @ max 100 mA (E-ATR-8 see tech table **GS465**)				
Alarms	Solenoid not connected/short circuit, cable break with current reference signal, over/under temperature, current control monitoring, power supplies level, pressure transducer failure (/W option)				
Insulation class	H (180°) Due to the occurring surface temperatures of the solenoid coils, the European standards ISO 13732-1 and EN982 must be taken into account				
Protection degree to DIN EN60529	**A** = IP65; **AEB**, **AES** = IP66 / IP67 with mating connectors				
Duty factor	Continuous rating (ED=100%)				
Tropicalization	Tropical coating on electronics PCB				
Additional characteristics	Short circuit protection of solenoid's current supply; current control by P.I.D. with rapid solenoid switching; protection against reverse polarity of power supply				
Communication interface	USB Atos ASCII coding	IO-Link Interface and System Specification 1.1.3	CANopen EN50325-4 + DS408	PROFIBUS DP EN50170-2/IEC61158	EtherCAT IEC 61158
Communication physical layer	not insulated USB 2.0+USB OTG	SDCI class port B	optical insulated CAN ISO11898	optical insulated RS485	Fast Ethernet, insulated 100 Base TX
Recommended wiring cable	LiYCY shielded cables, see section 20				

Note: a maximum time of 500 ms (depending on communication type) has to be considered between the driver energizing with the 24 VDC power supply and when the valve is ready to operate. During this time the current to the valve coils is switched to zero.

11 SEALS AND HYDRAULIC FLUIDS - for other fluids not included in below table, consult our technical office

Seals, recommended fluid temperature	NBR seals (standard) = -20°C ÷ +60°C (+80°C for **A**), with HFC hydraulic fluids = -20°C ÷ +50°C FKM seals (/PE option) = -20°C ÷ +80°C NBR low temp. seals (/BT option) = -40°C ÷ +60°C, with HFC hydraulic fluids = -20°C ÷ +50°C			
Recommended viscosity	20 ÷ 100 mm²/s - max allowed range 15 ÷ 380 mm²/s			
Max fluid contamination level normal operation	ISO4406 class 18/16/13 NAS1638 class 7		see also filter section at www.atos.com or KTF catalog	
Max fluid contamination level longer life	ISO4406 class 16/14/11 NAS1638 class 5			
Hydraulic fluid	**Suitable seals type**	**Classification**	**Ref. Standard**	
Mineral oils	NBR, FKM, NBR low temp.	HL, HLP, HLPD, HVLP, HVLPD	DIN 51524	
Flame resistant without water	FKM	HFDU, HFDR	ISO 12922	
Flame resistant with water	NBR, NBR low temp.	HFC		

12 DIAGRAMS (based on mineral oil ISO VG 46 at 50 °C)

12.1 Regulation diagrams (values measure at Δp 10 bar P-T)

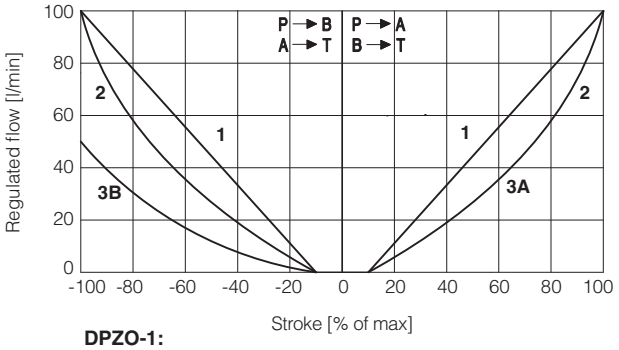

DPZO-1:
1 = L5 **2** = S5 **3A** = D5 (P → A, A → T)
3B = D5 (P → B, B → T)

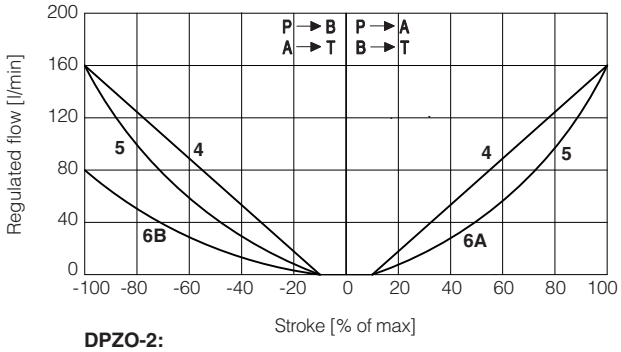

DPZO-2:
4 = L3 **5** = S3 **6A** = D3 (P → A, A → T)
6B = D3 (P → B, B → T)

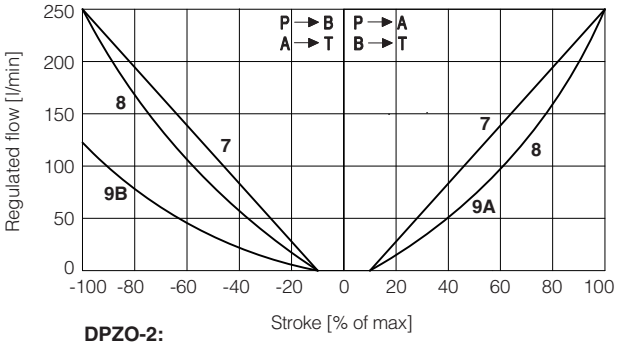

DPZO-2:
7 = L5 **8** = S5 **9A** = D5 (P → A, A → T)
9B = D5 (P → B, B → T)

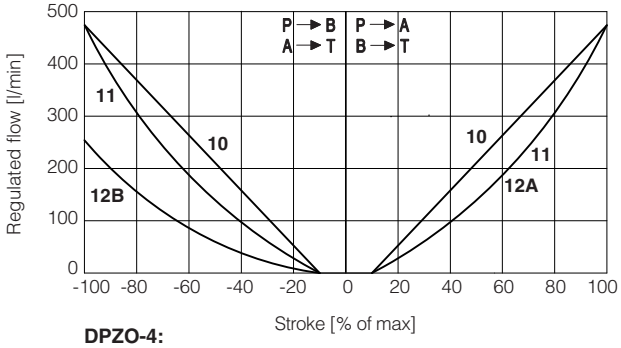

DPZO-4:
10 = L5 **11** = S5 **12A** = D5 (P → A, A → T)
12B = D5 (P → B, B → T)

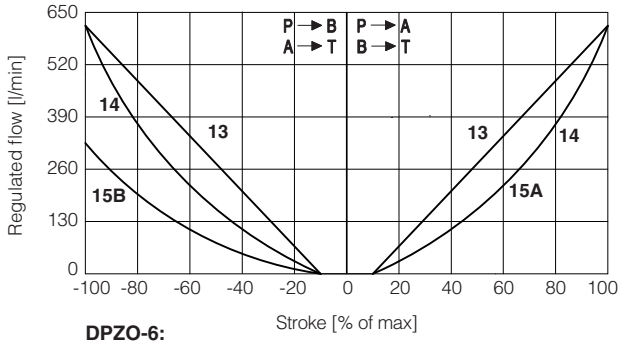

DPZO-6:
13 = L5 **14** = S5 **15A** = D5 (P → A, A → T)
15B = D5 (P → B, B → T)

Note: Hydraulic configuration vs. reference signal for configuration 71 and 73 (standard and option /B)

Reference signal $\left.\begin{matrix} 0 \div +10\ V \\ 12 \div 20\ mA \end{matrix}\right\}$ P → A / B → T

Reference signal $\left.\begin{matrix} 0 \div -10\ V \\ 12 \div 4\ mA \end{matrix}\right\}$ P → B / A → T

12.2 Flow /Δp diagram

stated at 100% of spool stroke

DPZO-1:
1 = spools L5, S5, D5

DPZO-2:
2 = spools L3, S3, D3
3 = spools L5, S5, D5

DPZO-4:
4 = spools L5, S5, D5

DPZO-6:
5 = spools L5, S5, D5

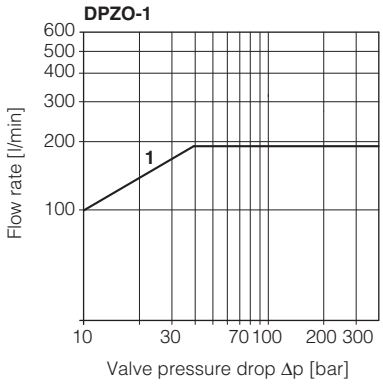

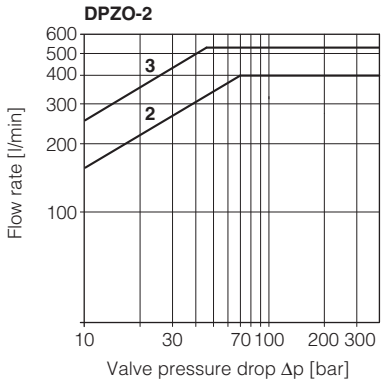

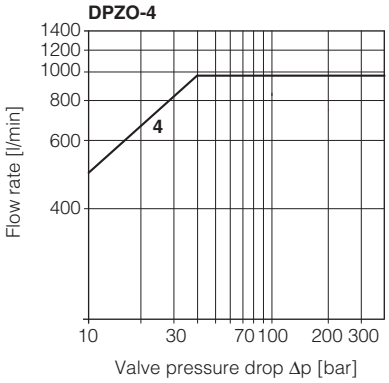

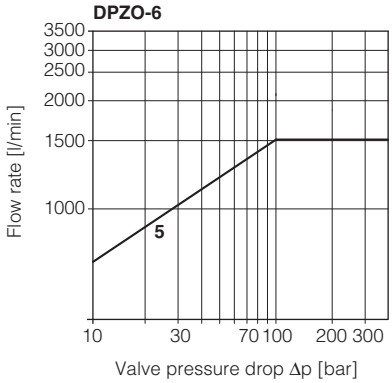

12.3 Response time (measured at pilot pressure = 100 bar)

The response times in below diagrams are measured at different steps of the reference input signal. They have to be considered as average values. For the valves with digital electronics the dynamics performances can be optimized by setting the internal software parameters.

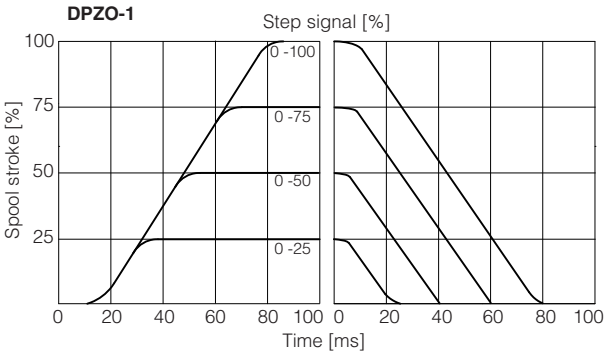

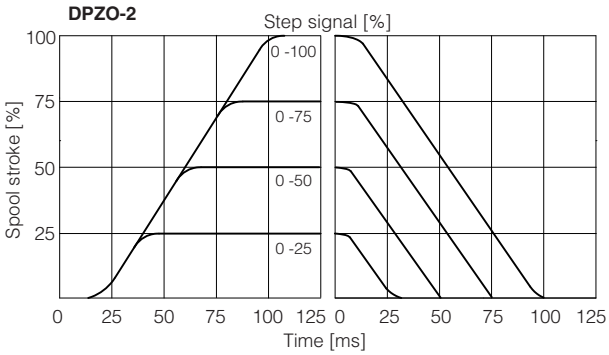

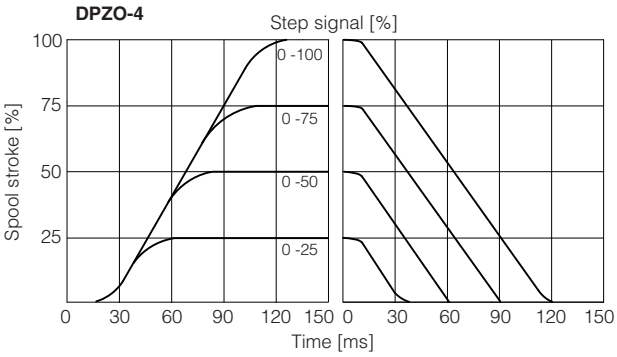

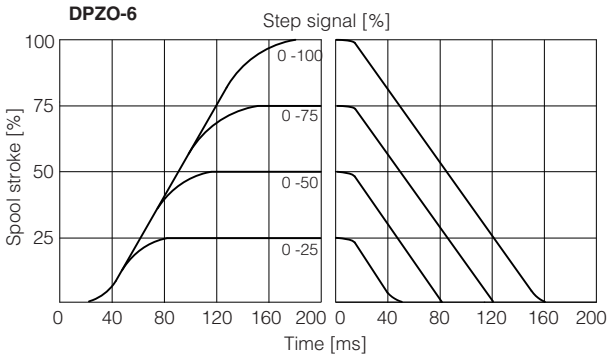

12.4 Operation as throttle valve

Single solenoid valves (*51) can be used as simple throttle valves:
Pmax = 250 bar
For this application, the use of valve -TEB or -TES (see tab. FS172) is advisable (consult our technical office)

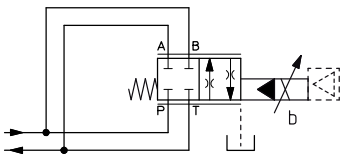

DPZO-*-	151-L5	251-L5	451-L5	651-L5
Max flow [l/min] Δp = 15 bar	320	860	1600	2200

13 HYDRAULIC OPTIONS

B = DPZO-*-*5 = solenoid and on-board digital driver at side B of the main stage (side A of pilot valve).
DPZO-*-*7 = on-board digital driver at side of port B of the main stage (side A of pilot valve).

D = Internal drain.
Pilot and drain configuration can be modified as shown in section 21.
The valve's standard configuration provides internal pilot and external drain.

E = External pilot (through port X).
Pilot and drain configuration can be modified as shown in section 21.
The valve's standard configuration provides internal pilot and external drain.

G = Pressure reducing valve installed between pilot valve and main body with fixed setting:
DPZO-1 and DPZO-2 = **30 bar**
DPZO-4 and DPZO-6 = **100 bar**
It is advisable for valves with internal pilot in case of system pressure higher than 150 bar.

Functional Scheme

Example of configuration 7*
3 positions, spring centered

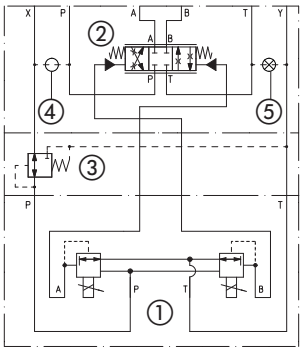

① Pilot valve
② Main stage
③ Pressure reducing valve
④ Plug to be added for external pilot trough port X
⑤ Plug to be removed for internal drain through port T

14 ELECTRONIC OPTIONS - only for **AEB** and **AES**

I = This option provides 4 ÷ 20 mA current reference, instead of the standard ±10 VDC.
Input signal can be reconfigured via software selecting between voltage and current, within a maximum range of ±10 VDC or ±20 mA.
It is normally used in case of long distance between the machine control unit and the valve or where the reference signal can be affected by electrical noise; the valve functioning is disabled in case of reference signal cable breakage.
Note: **/I** option not available for **AEB-IL**

Q = This option permits to inhibit the valve function without removing the power supply to the driver. Upon disable command the current to the solenoid is zeroed and the valve's spool moves to rest position. The option /Q is suggested for all cases where the valve has to be frequently inhibited during the machine cycle – see 17.5 for signal specifications.
Note: **/Q** option not available for **AEB-IL**

Z = This option provides, on the 12 pin main connector, the following additional features:
Fault output signal - see 17.6
Enable input signal - see above option /Q
Power supply for driver's logics and communication - see 17.2
Note: **/Z** option not available for **AEB-IL**

C = Only in combination with option **/W**
This option is available to connect pressure transducers with 4 ÷ 20 mA current output signal, instead of the standard 0 ÷ 10 VDC.
Input signal can be reconfigured via software selecting between voltage and current, within a maximum range of ±10 VDC or ±20 mA.

W = Only for valves coupled with pressure compensator, see tech table **D150**.
It provides the hydraulic power limitation function. The driver receives the flow reference signal by the analog input INPUT+ and a pressure transducer, installed in the hydraulic system, has to be connected to the driver's analog input TR. When the actual requested hydraulic power **p**x**Q** (TR x INPUT+) reaches the max power limit (p1xQ1), internally set by software, the driver automatically reduces the flow regulation of the valve. The higher is the pressure feedback the lower is the valve's regulated flow:

$$\text{Flow regulation} = \text{Min}\left(\frac{\text{PowerLimit [sw setting]}}{\text{Transducer Pressure [TR]}} \; ; \; \text{Flow Reference [INPUT+]} \right)$$

Notes: for **AEB-IL** the drive receives the flow reference signal directly by IO-Link interface
for **AES** the drive can receive the flow reference signal directly by fieldbus interface

Hydraulic Power Limitation

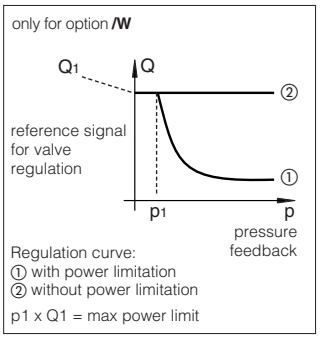

15 POSSIBLE COMBINED OPTIONS

For **AEB-NP** and **AES**

Hydraulic options: all combinations possible

Electronic options: /IQ, /IZ, /IW, /CW, /CWI

For **AEB-IL**

Hydraulic options: all combinations possible

Electronic options: /CW

Note: **/T** Bluetooth adapter option can be combined with all other options

16 COIL VOLTAGE OPTIONS - only for **A**

6 = Optional coil to be used with Atos drivers with power supply 12 VDC.

18 = Optional coil to be used with electronic drivers not supplied by Atos, with power supply 24 VDC and with max current limited to 1A.

17 POWER SUPPLY AND SIGNALS SPECIFICATIONS - only for **AEB** and **AES**

Generic electrical output signals of the valve (e.g. fault or monitor signals) must not be directly used to activate safety functions, like to switch-ON/OFF the machine's safety components, as prescribed by the European standards (Safety requirements of fluid technology systems and components-hydraulics, ISO 4413).

For **AEB-IL** see section 18 for IO-Link signals specifications and see 17.7 for presssure trasducer signal for **/W** option.

17.1 Power supply (V+ and V0)

The power supply must be appropriately stabilized or rectified and filtered: apply at least a 10000 μF/40 V capacitance to single phase rectifiers or a 4700 μF/40 V capacitance to three phase rectifiers. In case of separate power supply see 17.2.

⚠ A safety fuse is required in series to each power supply: 2,5 A time lag fuse.

17.2 Power supply for driver's logic and communication (VL+ and VL0) - only for **/Z** and **/W** options

The power supply for driver's logic and communication must be appropriately stabilized or rectified and filtered: apply at least a 10000 μF/40 V capacitance to single phase rectifiers or a 4700 μF/40 V capacitance to three phase rectifiers.
The separate power supply for driver's logic on pin 9 and 10, allow to remove solenoid power supply from pin 1 and 2 maintaining active the diagnostics, USB and fieldbus communications.

⚠ A safety fuse is required in series to each driver's logic and communication power supply: 500 mA fast fuse.

17.3 Reference input signal (INPUT+)

The driver controls in closed loop the current to the valve proportionally to the external reference input signal.
Reference input signal is factory preset according to selected valve code, defaults are ±10 VDC for standard and 4 ÷ 20 mA for /I option.
Input signal can be reconfigured via software selecting between voltage and current, within a maximum range of ±10 VDC or ± 20 mA.
Drivers with fieldbus interface (BC, BP, EH) can be software set to receive reference signal directly from the machine control unit (fieldbus reference). Analog reference input signal can be used as on-off commands with input range 0 ÷ 24VDC.

17.4 Monitor output signals (MONITOR and MONITOR2)

The driver generates an analog output signal (MONITOR) proportional to the actual coil current of the valve; the monitor output signal can be software set to show other signals available in the driver (e.g. analog reference, fieldbus reference).
Monitor output signal is factory preset according to selected valve code, default settings is ±5 VDC (1V = 1A).
Output signal can be reconfigured via software, within a maximum range of ±5 VDC.

Option /W
The driver generates a second analog output signal (MONITOR2) proportional to the actual system pressure.
The output maximum range is ±5 VDC; default setting is 0 ÷ 5 VDC.

17.5 Enable input signal (ENABLE) - not for standard

To enable the driver, supply a 24 VDC on pin 3 (pin C): Enable input signal allows to enable/disable the current supply to the solenoid, without removing the electrical power supply to the driver; it is used to active the communication and the other driver functions when the valve must be disabled for safety reasons. This condition **does not comply** with norms IEC 61508 and ISO 13849.
Enable input signal can be used as generic digital input by software selection.

17.6 Fault output signal (FAULT) - only for **/Z** and **/W** options

Fault output signal indicates fault conditions of the driver (solenoid short circuits/not connected, reference signal broken for 4 ÷ 20 mA input, etc.).
Fault presence corresponds to 0 VDC, normal working corresponds to 24 VDC.
Fault status is not affected by the Enable input signal.

17.7 Remote pressure transducer input signal (TR) - only for **/W** option

Analog pressure transducers can be directly connected to the driver (see 19.5).
Analog input signal is factory preset according to selected driver code, defaults are 0 ÷ 10 VDC for standard and 4 ÷ 20 mA for /C option.
Input signal can be reconfigured via software selecting between voltage and current, within a maximum range of ±10 VDC or ± 20 mA.
Note: transducer feedback can be read as a digital information through fieldbus and IO-Link communication - software selectable.

18 IO-LINK SIGNALS SPECIFICATIONS - only for **AEB-IL**

18.1 Power supply for IO-Link communication (L+ and L-)

The IO-Link master provides dedicated 24 VDC power supply for IO-Link communication.
Maximum power consumption: 2 W
Internal electrical isolation of power L+, L- from P24, N24

18.2 Power supply for driver's logic and valve regulation (P24 and N24)

The IO-Link master provides dedicated 24 VDC power supply for valve regulation, logics and diagnostics.
Maximum power consumption: 50 W
Internal electrical isolation of power P24, N24 from L+, L-

18.3 IO-Link data line (C/Q)

C/Q signal is used to establish communication between IO-Link master and valve.

19 ELECTRONIC CONNECTIONS

19.1 Main connector signals - 7 pin (A1) Standard and /Q option - for AEB-NP and AES

PIN	Standard	/Q	TECHNICAL SPECIFICATIONS	NOTES
A	**V+**		Power supply 24 VDC	Input - power supply
B	**V0**		Power supply 0 VDC	Gnd - power supply
C	**AGND**		Analog ground	Gnd - analog signal
		ENABLE	Enable (24 VDC) or disable (0 VDC) the driver, referred to V0	Input - on/off signal
D	**INPUT+**		Reference input signal: ±10 VDC / ±20 mA maximum range Defaults are ±10 VDC for standard and 4 ÷ 20 mA for /I option	Input - analog signal **Software selectable**
E	**INPUT-**		Negative reference input signal for INPUT+	Input - analog signal
F	**MONITOR** referred to: AGND | V0		Monitor output signal: ±5 VDC maximum range Default is ± 5 VDC (1V = 1A)	Output - analog signal **Software selectable**
G	**EARTH**		Internally connected to driver housing	

19.2 Main connector signals - 12 pin (A2) /Z and /W options - for AEB-NP and AES

PIN	/Z	/W	TECHNICAL SPECIFICATIONS	NOTES
1	**V+**		Power supply 24 VDC	Input - power supply
2	**V0**		Power supply 0 VDC	Gnd - power supply
3	**ENABLE**		Enable (24 VDC) or disable (0 VDC) the driver, referred to VL0	Input - on/off signal
4	**INPUT+**		Reference input signal: ±10 VDC / ±20 mA maximum range Defaults are ±10 VDC for standard and 4 ÷ 20 mA for /I option	Input - analog signal **Software selectable**
5	**INPUT-**		Negative reference input signal for INPUT+	Input - analog signal
6	**MONITOR**		Monitor output signal: ±5 VDC maximum range, referred to VL0 Default is ± 5 VDC (1V = 1A)	Output - analog signal **Software selectable**
7	**NC**		Do not connect	
8	**NC**		Do not connect	
		MONITOR2	2nd monitor output signal: ±5 VDC maximum range, referred to VL0. Default is 0 ÷ 5 VDC	Output - analog signal
9	**VL+**		Power supply 24 VDC for driver's logic and communication	Input - power supply
10	**VL0**		Power supply 0 VDC for driver's logic and communication	Gnd - power supply
11	**FAULT**		Fault (0 VDC) or normal working (24 VDC), referred to VL0	Output - on/off signal
PE	**EARTH**		Internally connected to driver housing	

Note: do not disconnect VL0 before VL+ when the driver is connected to PC USB port

19.3 IO-Link connector signals - M12 - 5 pin - Coding A, port class B (A) only for AEB-IL

PIN	SIGNAL	TECHNICAL SPECIFICATIONS	NOTES
1	**L+**	Power supply 24 VDC for IO-Link communication	Input - power supply
2	**P24**	Power supply 24 VDC for valve regulation, logics and diagnostics	Input - power supply
3	**L-**	Power supply 0 VDC for IO-Link communication	Gnd - power supply
4	**C/Q**	IO-Link data line	Input / Output - signal
5	**N24**	Power supply 0 VDC for valve regulation, logics and diagnostics	Gnd - power supply

Note: L+, L- and P24, N24 are electrically isolated

19.4 Communication connectors - for AEB (B) and AES (B) - (C)

(B) **USB connector - M12 - 5 pin** always present		
PIN	**SIGNAL**	**TECHNICAL SPECIFICATION (1)**
1	**+5V_USB**	Power supply
2	**ID**	Identification
3	**GND_USB**	Signal zero data line
4	**D-**	Data line -
5	**D+**	Data line +

(C1) **BC fieldbus execution, connector - M12 - 5 pin (2)**		
PIN	**SIGNAL**	**TECHNICAL SPECIFICATION (1)**
1	**CAN_SHLD**	Shield
2	**NC**	do not connect
3	**CAN_GND**	Signal zero data line
4	**CAN_H**	Bus line (high)
5	**CAN_L**	Bus line (low)

(C2) **BP fieldbus execution, connector - M12 - 5 pin (2)**		
PIN	**SIGNAL**	**TECHNICAL SPECIFICATION (1)**
1	**+5V**	Termination supply signal
2	**LINE-A**	Bus line (high)
3	**DGND**	Data line and termination signal zero
4	**LINE-B**	Bus line (low)
5	**SHIELD**	

(C3) (C4) **EH fieldbus execution, connector - M12 - 4 pin (2)**		
PIN	**SIGNAL**	**TECHNICAL SPECIFICATION (1)**
1	**TX+**	Transmitter
2	**RX+**	Receiver
3	**TX-**	Transmitter
4	**RX-**	Receiver
Housing	**SHIELD**	

(1) Shield connection on connector's housing is recommended

(2) Only for **AES** execution

19.5 Remote pressure transducer connector - M12 - 5 pin - only for **/W** option - for **AEB** and **AES** (D)

PIN	SIGNAL	TECHNICAL SPECIFICATION	Voltage	Current
1	**VF +24V**	Power supply +24VDC	Connect	Connect
2	**TR**	Signal transducer maximum range ±10 VDC / ±20 mA, software selectable Defaults are 0 ÷ 10 VDC for standard and 4 ÷ 20 mA for /C option	Connect	Connect
3	**AGND**	Common GND for transducer power and signals	Connect	/
4	**NC**	Not Connect	/	/
5	**NC**	Not Connect	/	/

Remote pressure transducer connection - example

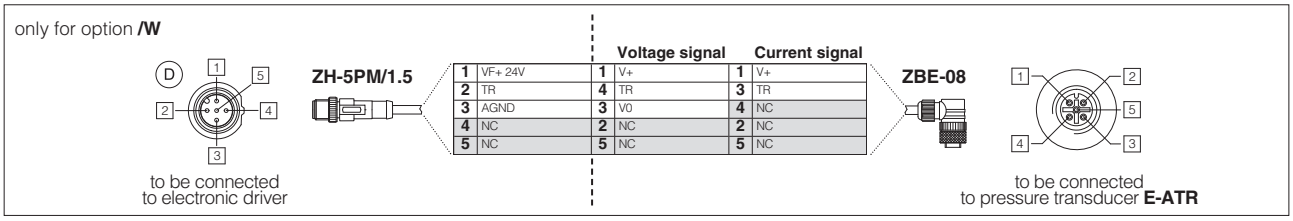

Note: connectors front view

19.6 Solenoid connection - only for **A**

PIN	SIGNAL	TECHNICAL SPECIFICATION	Connector code 666
1	**COIL**	Power supply	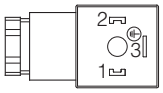
2	**COIL**	Power supply	
3	**GND**	Ground	

19.7 AEB-NP connections layout

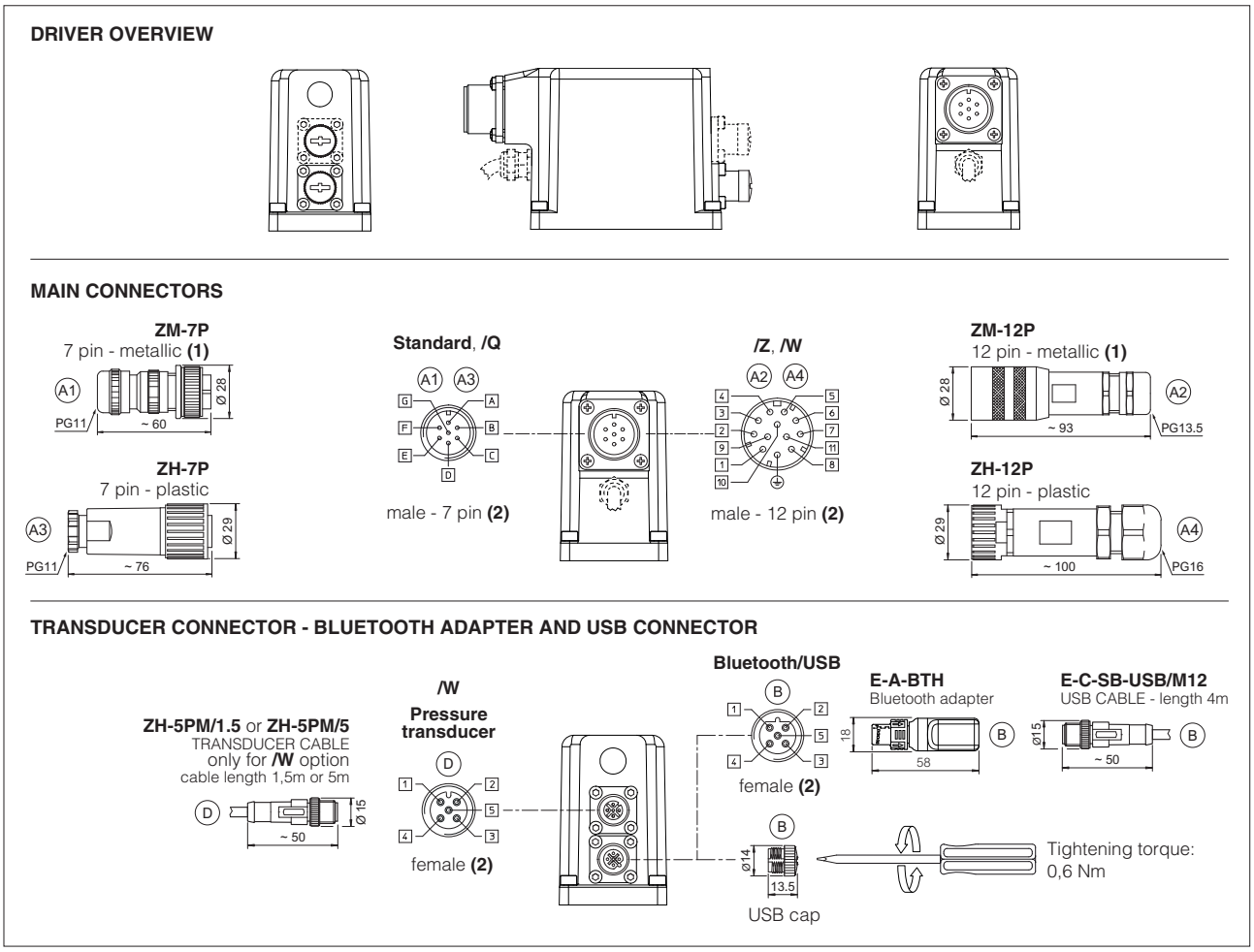

(1) Use of metallic connectors is strongly recommended in order to fulfill EMC requirements **(2)** Pin layout always referred to driver's view

19.8 AEB-IL connections layout

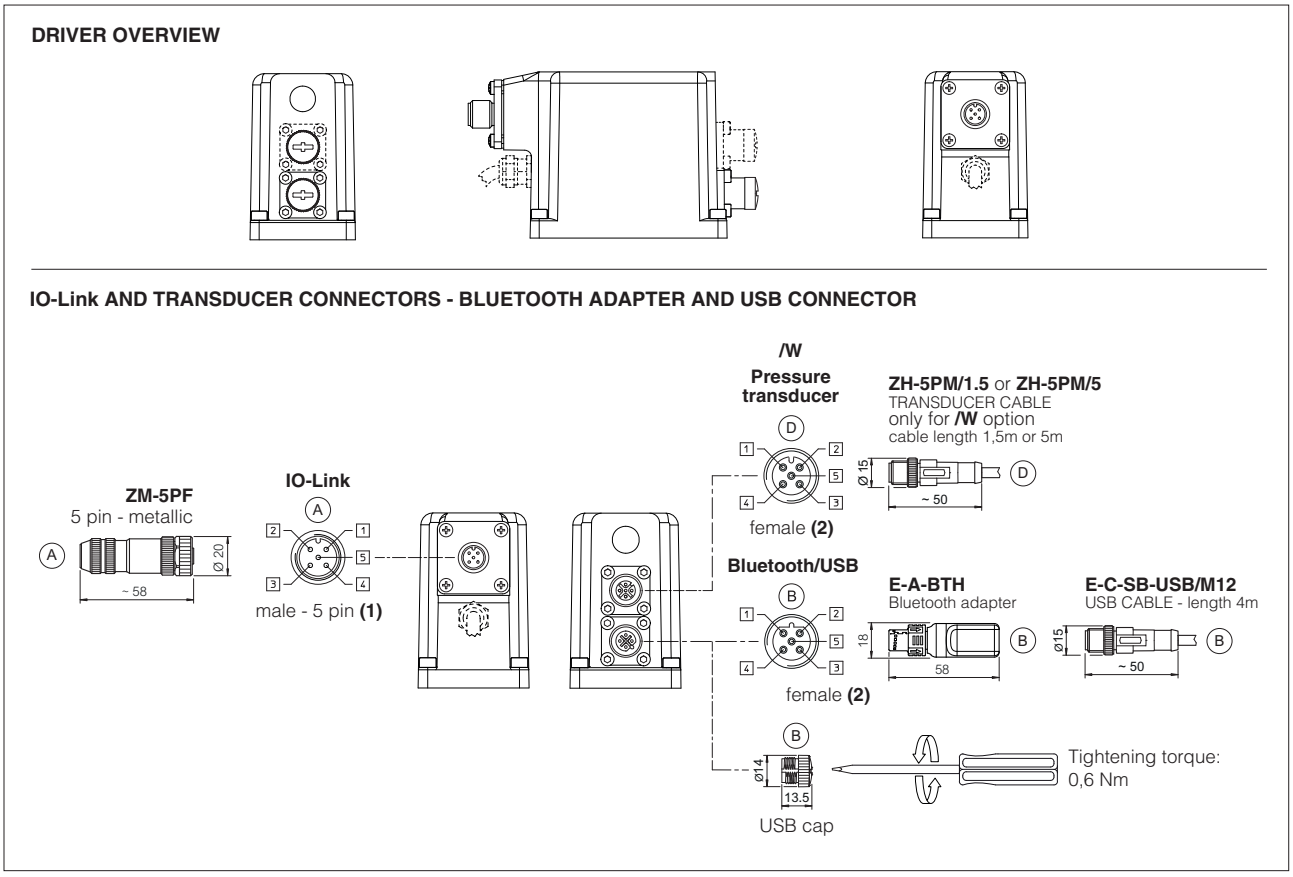

(1) Use of metallic connectors is strongly recommended in order to fulfill EMC requirements **(2)** Pin layout always referred to driver's view

19.9 AES connections layout

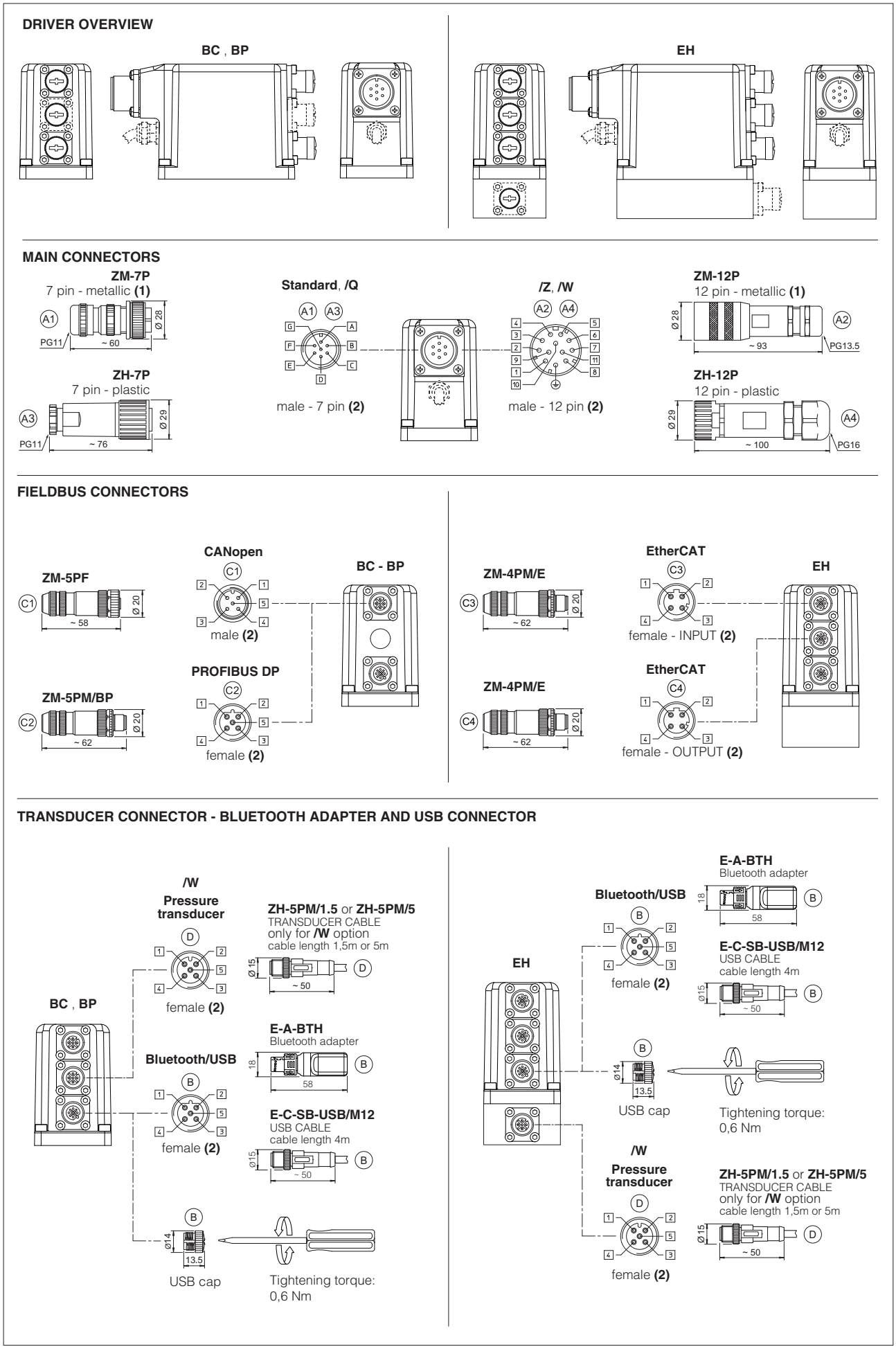

(1) Use of metallic connectors is strongly recommended in order to fulfill EMC requirements

(2) Pin layout always referred to driver's view

20 CONNECTORS CHARACTERISTICS - to be ordered separately

20.1 Main connectors - 7 pin - for AEB-NP and AES

CONNECTOR TYPE	POWER SUPPLY AND SIGNALS	POWER SUPPLY AND SIGNALS
CODE	(A1) ZM-7P	(A3) ZH-7P
Type	7pin female straight circular	7pin female straight circular
Standard	According to MIL-C-5015	According to MIL-C-5015
Material	Metallic	Plastic reinforced with fiber glass
Cable gland	PG11	PG11
Recommended cable	LiYCY 7 x 0,75 mm² max 20 m (logic and power supply) or LiYCY 7 x 1 mm² max 40 m (logic and power supply)	LiYCY 7 x 0,75 mm² max 20 m (logic and power supply) or LiYCY 7 x 1 mm² max 40 m (logic and power supply)
Conductor size	up to 1 mm² - available for 7 wires	up to 1 mm² - available for 7 wires
Connection type	to solder	to solder
Protection (EN 60529)	IP 67	IP 67

20.2 Main connectors - 12 pin - for AEB-NP and AES

CONNECTOR TYPE	POWER SUPPLY AND SIGNALS	POWER SUPPLY AND SIGNALS
CODE	(A2) ZM-12P	(A4) ZH-12P
Type	12pin female straight circular	12pin female straight circular
Standard	DIN 43651	DIN 43651
Material	Metallic	Plastic reinforced with fiber glass
Cable gland	PG13,5	PG16
Recommended cable	LiYCY 12 x 0,75 mm² max 20 m (logic and power supply)	LiYCY 10 x 0,14mm² max 40 m (logic) LiYY 3 x 1mm² max 40 m (power supply)
Conductor size	0,5 mm² to 1,5 mm² - available for 12 wires	0,14 mm² to 0,5 mm² - available for 9 wires 0,5 mm² to 1,5 mm² - available for 3 wires
Connection type	to crimp	to crimp
Protection (EN 60529)	IP 67	IP 67

20.3 IO-Link connector - only for AEB-IL

CONNECTOR TYPE	IL IO-Link
CODE	(A) ZM-5PF
Type	5pin female straight circular
Standard	M12 coding A – IEC 61076-2-101
Material	Metallic
Cable gland	Pressure nut - cable diameter 6÷8 mm
Recommended cable	5 x 0,75 mm² max 20 m
Connection type	screw terminal
Protection (EN 60529)	IP 67

20.4 Fieldbus communication connectors - only for AES

CONNECTOR TYPE	BC CANopen (1)		BP PROFIBUS DP (1)		EH EtherCAT (2)
CODE	(C1) ZM-5PF	(C2) ZM-5PM	(C1) ZM-5PF/BP	(C2) ZM-5PM/BP	(C1) (C2) ZM-4PM/E
Type	5 pin female straight circular	5 pin male straight circular	5 pin female straight circular	5 pin male straight circular	4 pin male straight circular
Standard	M12 coding A – IEC 61076-2-101		M12 coding B – IEC 61076-2-101		M12 coding D – IEC 61076-2-101
Material	Metallic		Metallic		Metallic
Cable gland	Pressure nut - cable diameter 6÷8 mm		Pressure nut - cable diameter 6÷8 mm		Pressure nut - cable diameter 4÷8 mm
Cable	CANbus Standard (DR 303-1)		PROFIBUS DP Standard		Ethernet standard CAT-5
Connection type	screw terminal		screw terminal		terminal block
Protection (EN 60529)	IP67		IP 67		IP 67

(1) E-TRM-** terminators can be ordered separately - see tech table **GS500**

(2) Internally terminated

20.5 Remote pressure transducer connectors - only for /W option

CONNECTOR TYPE	TRANSDUCER	
CODE	(D1) ZH-5PM/1.5	(D1) ZH-5PM/5
Type	5 pin male straight circular	
Standard	M12 coding A – IEC 61076-2-101	
Material	Plastic	
Cable gland	Connector moulded on cables 1,5 m length	5 m length
Cable	5 x 0,25 mm²	
Connection type	molded cable	
Protection (EN 60529)	IP 67	

21 PLUGS LOCATION FOR PILOT/DRAIN CHANNELS

Depending on the position of internal plugs, different pilot/drain configurations can be obtained as shown below.
To modify the pilot/drain configuration, proper plugs must only be interchanged. The plugs have to be sealed using loctite 270.
Standard valves configuration provides internal pilot and external drain

DPZO-1 Pilot channels Drain channels

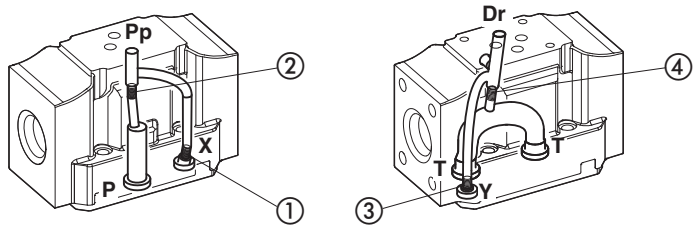

Internal piloting: blinded plug SP-X300F ① in X;
External piloting: blinded plug SP-X300F ② in Pp;
Internal drain: blinded plug SP-X300F ③ in Y;
External drain: blinded plug SP-X300F ④ in Dr.

DPZO-2 Pilot channels Drain channels

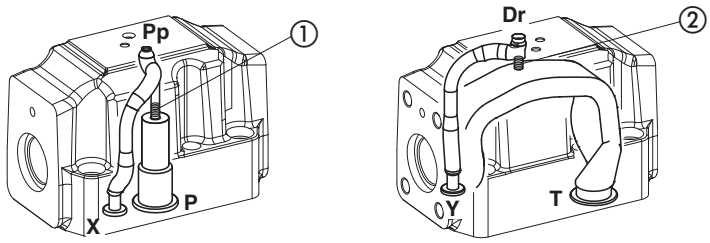

Internal piloting: Without blinded plug SP-X300F ①;
External piloting: Add blinded plug SP-X300F ①;
Internal drain: Without blinded plug SP-X300F ②;
External drain: Add blinded plug SP-X300F ②.

DPZO-4 Pilot channels Drain channels

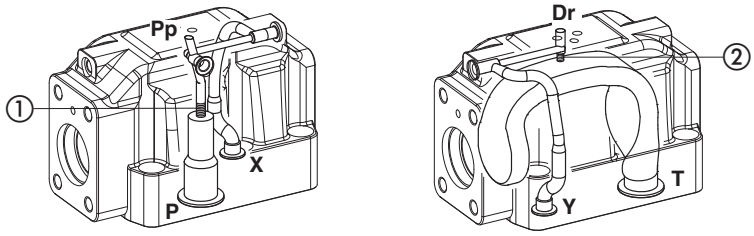

Internal piloting: Without blinded plug SP-X500F ①;
External piloting: Add blinded plug SP-X500F ①;
Internal drain: Without blinded plug SP-X300F ②;
External drain: Add blinded plug SP-X300F ②.

DPZO-6 Pilot channels Drain channels

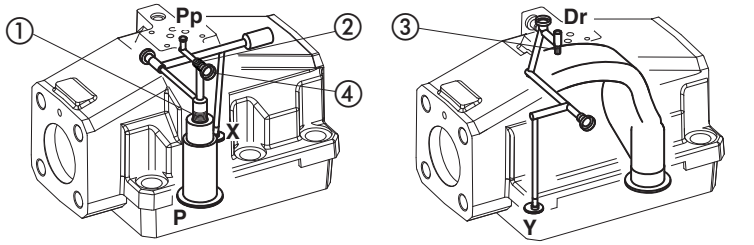

Internal piloting: Without plug ①;
External piloting: Add DIN-908 M16x1,5 in pos ①;
Add plug SP-X325A in pos ②;
Internal drain: Without blinded plug SP-X300F ③;
External drain: Add blinded plug SP-X300F ③.

To reach the orefice ② remove plug ④ = G1/8”

22 FASTENING BOLTS AND SEALS

Type	Size	Fastening bolts	Seals
DPZO	**1** = 10	4 socket head screws M6x40 class 12.9 Tightening torque = 15 Nm	5 OR 2050; Diameter of ports A, B, P, T: Ø 11 mm (max) 2 OR 108 Diameter of ports X, Y: Ø = 5 mm (max)
	2 = 16	4 socket head screws M10x50 class 12.9 Tightening torque = 70 Nm 2 socket head screws M6x45 class 12.9 Tightening torque = 15 Nm	4 OR 130; Diameter of ports A, B, P, T: Ø 20 mm (max) 2 OR 2043 Diameter of ports X, Y: Ø = 7 mm (max)
	4 = 25	6 socket head screws M12x60 class 12.9 Tightening torque = 125 Nm	4 OR 4112; Diameter of ports A, B, P, T: Ø 24 mm (max) 2 OR 3056 Diameter of ports X, Y: Ø = 7 mm (max)
	6 = 32	6 socket head screws M20x80 class 12.9 Tightening torque = 600 Nm	4 OR 144; Diameter of ports A, B, P, T: Ø 34 mm (max) 2 OR 3056 Diameter of ports X, Y: Ø = 7 mm (max)

23 INSTALLATION DIMENSIONS FOR DPZO-1 [mm]

ISO 4401: 2005
Mounting surface: 4401-05-05-0-05 (see table P005)

	Mass [kg]		
	A	**AEB, AES**	**AES-EH**
DPZO-*-15	7,7	8,1	8,2
DPZO-*-17	8,6	9	9,1
Option /G	+0,9		

DPZO-A-1

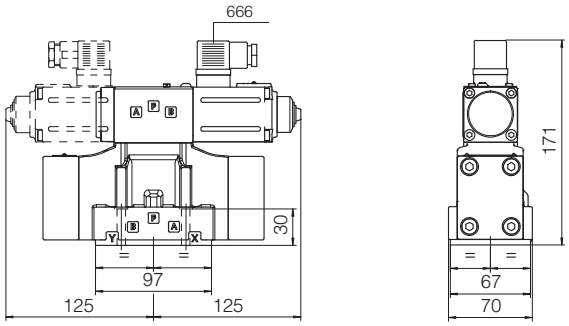

DPZO-AEB-NP-1
DPZO-AEB-IL-1

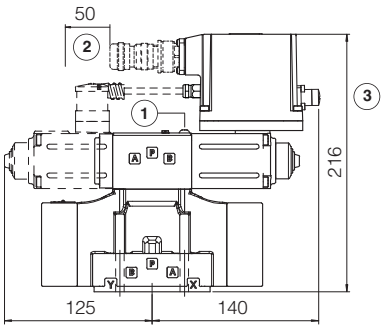

DPZO-AES-BC-1
DPZO-AES-BP-1

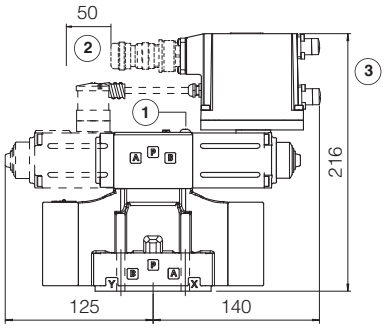

DPZO-AES-EH-1

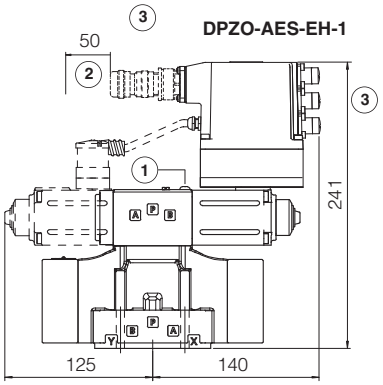

option /G

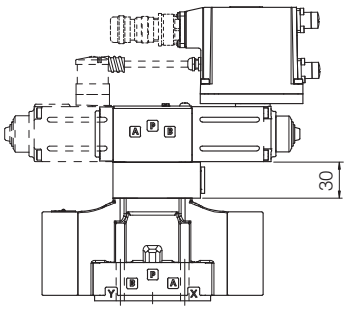

Dotted line = double solenoid version

(1) = Air bleeding 3

(2) = Space required for connection cable and for connector removal

(3) = The dimensions of connectors and Bluetooth adapter must be considered, see section 19.7, 19.8 and 19.9

Note: for /B option the solenoid and the on-board digital driver are at side of port B of the main stage

24 INSTALLATION DIMENSIONS FOR DPZO-2 [mm]

ISO 4401: 2005
Mounting surface: 4401-07-07-0-05 (see table P005)

	Mass [kg]		
	A	**AEB, AES**	**AES-EH**
DPZO-*-25	11,9	12,3	12,4
DPZO-*-27	12,8	13,2	13,3
Option /G	+0,9		

DPZO-A-2

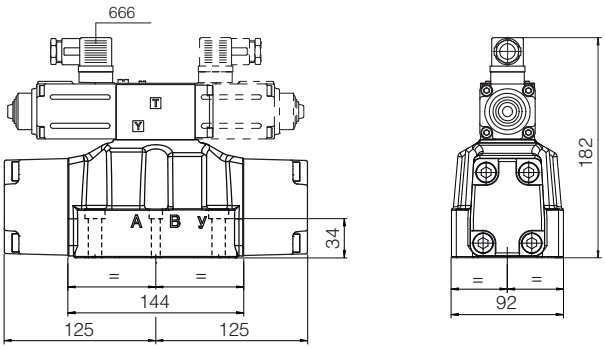

DPZO-AEB-NP-2
DPZO-AEB-IL-2

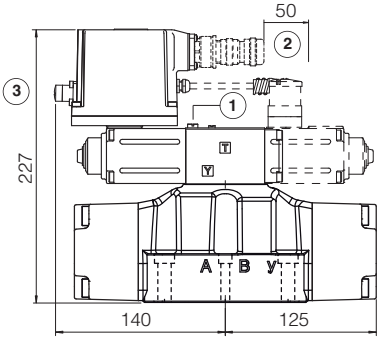

DPZO-AES-BC-2
DPZO-AES-BP-2

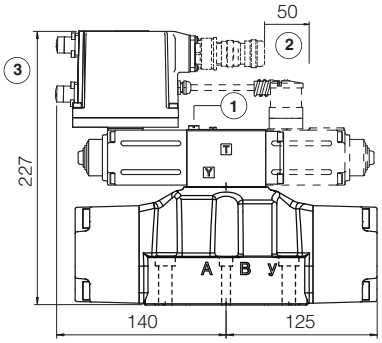

DPZO-AES-EH-2

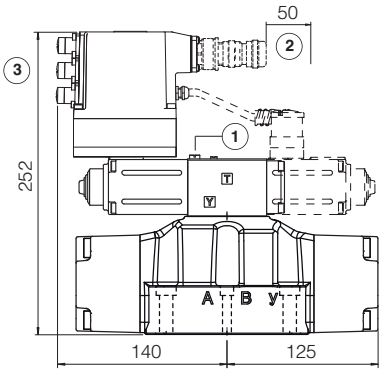

option /G

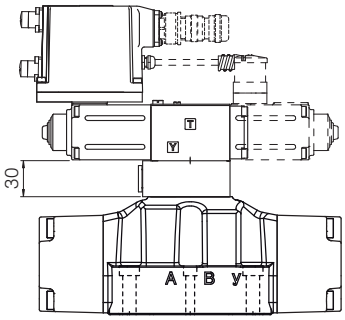

Dotted line = double solenoid version

(1) = Air bleeding 3

(2) = Space required for connection cable and for connector removal

(3) = The dimensions of connectors and Bluetooth adapter must be considered, see section 19.7, 19.8 and 19.9

Note: for /B option the solenoid and the on-board digital driver are at side of port B of the main stage

25 INSTALLATION DIMENSIONS FOR DPZO-4 [mm]

ISO 4401: 2005
Mounting surface: 4401-08-08-0-05 (see table P005)

	Mass [kg]		
	A	**AEB, AES**	**AES-EH**
DPZO-*-45	17,1	18	18,1
DPZO-*-47	18	18,9	19
Option /G	+0,9		

DPZO-A-4

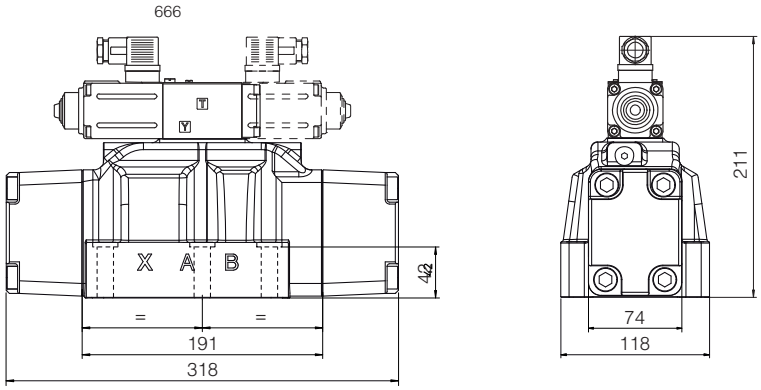

DPZO-AEB-NP-4
DPZO-AEB-IL-4

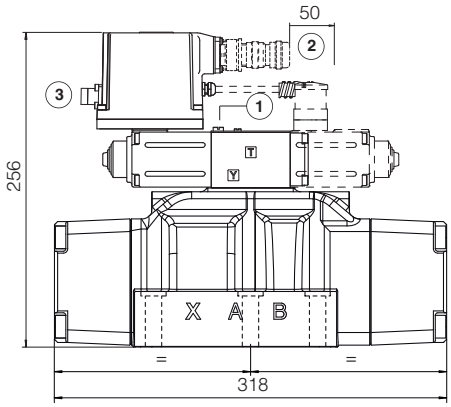

DPZO-AES-BC-4
DPZO-AES-BP-4

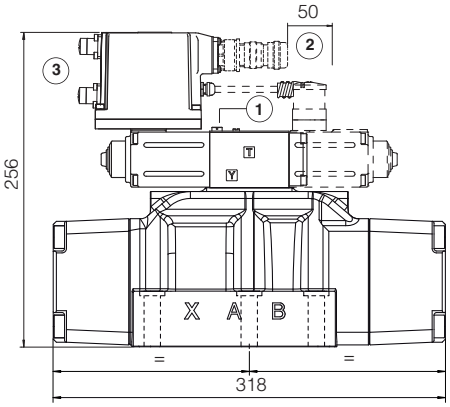

DPZO-AES-EH-4

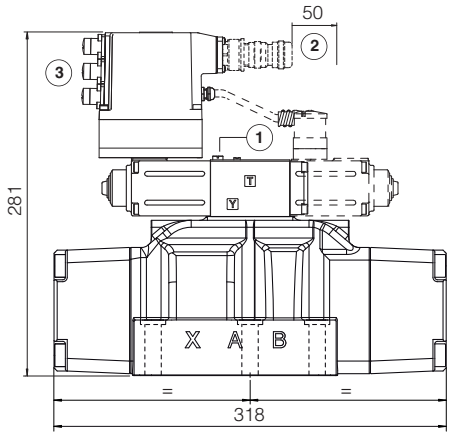

option /G

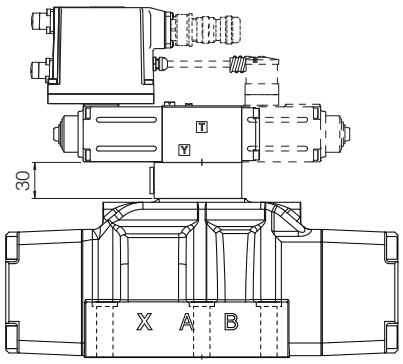

Dotted line = double solenoid version

(1) = Air bleeding 3

(2) = Space required for connection cable and for connector removal

(3) = The dimensions of connectors and Bluetooth adapter must be considered, see section 19.7, 19.8 and 19.9

Note: for /B option the solenoid and the on-board digital driver are at side of port B of the main stage

26 INSTALLATION DIMENSIONS FOR DPZO-6 [mm]

ISO 4401: 2005
Mounting surface: 4401-10-09-0-05 (see table P005)

	Mass [kg]		
	A	**AEB, AES**	**AES-EH**
DPZO-*-65	42,1	42,5	42,6
DPZO-*-67	42,7	43,1	43,2
Option /G	+2,3		

DPZO-A-6

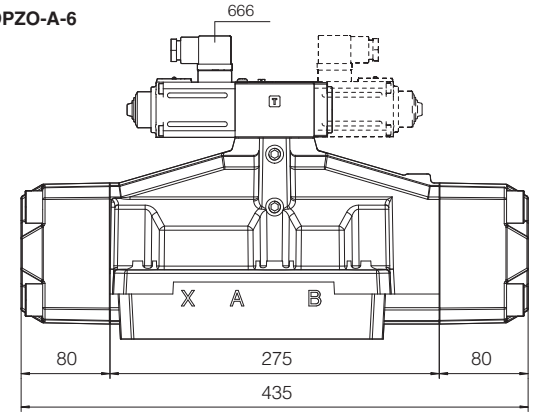

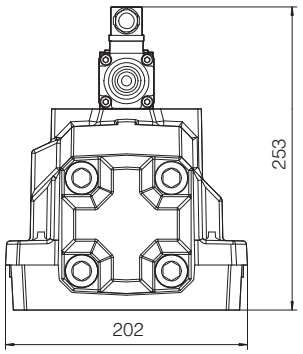

DPZO-AEB-NP-6
DPZO-AEB-IL-6

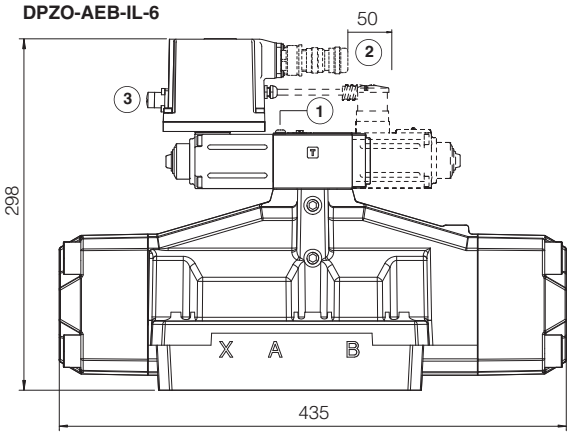

DPZO-AES-BC-6
DPZO-AES-BP-6

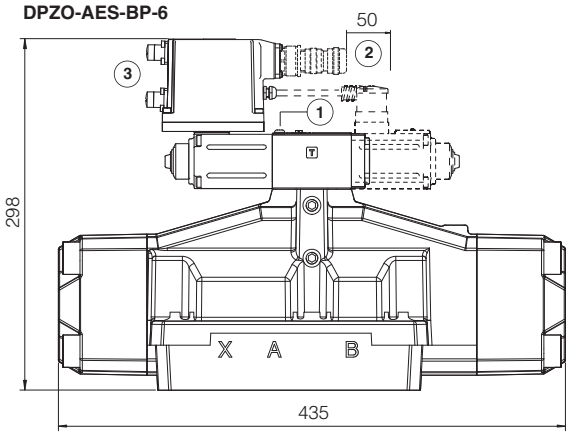

DPZO-AES-EH-6

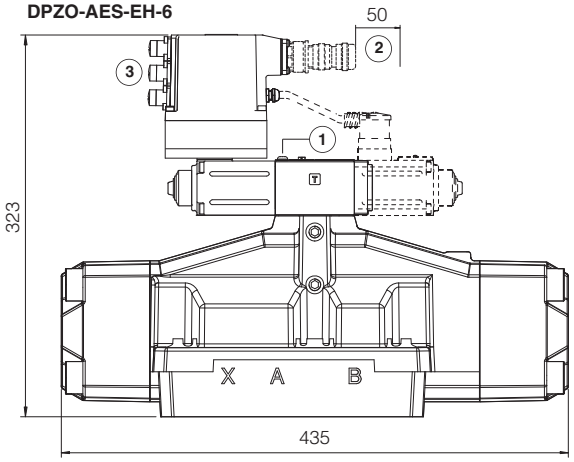

Dotted line = double solenoid version

option /G

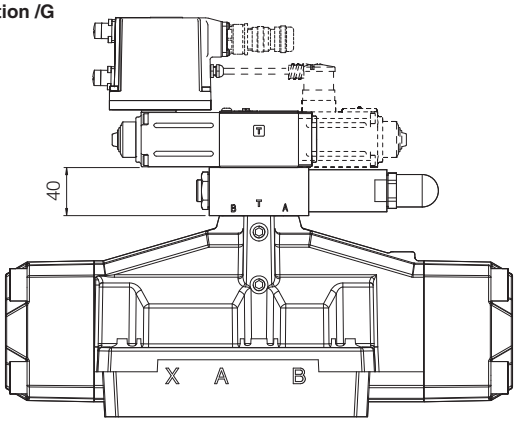

(1) = Air bleeding 3

(2) = Space required for connection cable and for connector removal

(3) = The dimensions of connectors and Bluetooth adapter must be considered, see section 19.7, 19.8 and 19.9

Note: for /B option the solenoid and the on-board digital driver are at side of port B of the main stage

27 RELATED DOCUMENTATION

FS001	Basics for digital electrohydraulics	**K800**	Electric and electronic connectors
FS900	Operating and maintenance information for proportional valves	**P005**	Mounting surfaces for electrohydraulic valves
G010	E-MI-AC analog driver	**QB120**	Quickstart for AEB valves commissioning
G020	E-MI-AS-IR digital driver	**QF120**	Quickstart for AES valves commissioning
G030	E-BM-AS digital driver	**E-MAN-MI-AS**	E-MI-AS-IR user manual (off-board)
GS050	E-BM-AES digital driver	**E-MAN-BM-AS**	E-BM-AS user manual (off-board)
GS500	Programming tools	**E-MAN-BM-AES**	E-BM-AES user manual (off-board)
GS510	Fieldbus	**E-MAN-RI-AEB**	AEB user manual
GS520	IO-Link interface	**E-MAN-RI-AES**	AES user manual

Proportional directional valves

piloted, without transducer, with positive spool overlap

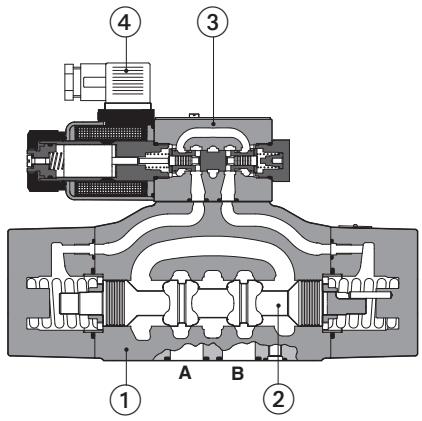

DPZE-A-251-*

① Valve body
② Main spool
③ Pilot valve
④ Electronic connector type 666 (supplied with the valve)

DPZE-A

Piloted proportional valves without position transducer and with positive spool overlap, for open loop directional controls and not compensated flow regulations.

They operate in association with electronic derivers, see section 2, which supply the proportional valve with proper current to align the hydraulic regulation to the reference signal.

The solenoid are certified according to North American standards cURus.

Mounting surface: **ISO 4401**

Size: **10** ÷ **32** - ISO 4401
Max flow: **180** ÷ **1500 l/min**
Max pressure: **350 bar**

1 MODEL CODE

DPZE	-	A	-	2	71	-	L	5	/	*	-	*	/	*	*	/	*

DPZE: Proportional directional valve, piloted

A = for off-board driver, see section 2

Valve size ISO 4401:
1 = 10 **2** = 16 **4** = 25 **6** = 32

Configuration:

	Standard	Option **/B**
51 =	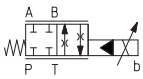	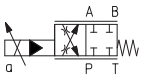
53 =	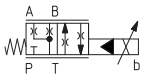	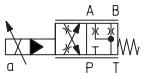
71 =	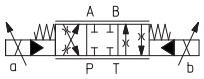	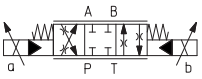
73 =	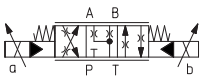	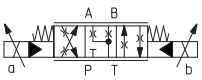

Spool type - regulating characteristics:

L = linear

S = progressive

D = differential-progressive

P-A = Q, B-T = Q/2
P-B = Q/2, A-T = Q

Spool size:

	3 (L,S,D)	**5** (L,S,D)
DPZE-1 =	-	100
DPZE-2 =	160	250
DPZE-4 =	-	480
DPZE-6 =	-	640

Nominal flow (l/min) at Δp 10bar P-T

Hydraulic options, see sect. 9:
B = solenoid at side of port B of the main stage (side A of pilot valve) **(1)** - only for configuration 51and 53
D = internal drain
E = external pilot pressure
G = pressure reducing valve for piloting

Coils with special connectors, see section 11
- = omit for standard DIN connector
J = AMP Junior Timer connector
K = Deutsch connector
S = Lead Wire connection

Coil voltage, see section 2, 6:
- = standard coil for 24V$_{DC}$ Atos drivers
6 = optional coil for 12V$_{DC}$ Atos drivers
18 = optional coil for low current drivers **(2)**

Series number

Seals material, see sect. 7:
- = NBR
PE = FKM
BT = HNBR

(1) In standard configuration the solenoid (config. 51 and 53) is at side A of the main stage (side B of pilot valve)
(2) Select valve's coil voltage **/18** in case of electronic drivers not supplied by Atos, with power supply 24V$_{DC}$ and with max current limited to 1A.

2 OFF-BOARD ELECTRONIC DRIVERS

Drivers model	E-MI-AC-01F		E-MI-AS-IR		E-BM-AS-PS		E-BM-AES
Type	Analog		Digital				
Voltage supply (VDC)	12	24	12	24	12	24	24
Valve coil option	/6	std	/6	std	/6	std	std
Format	plug-in to solenoid				DIN-rail panel		
Tech table	G010		G020		G030		GS050

3 GENERAL NOTES

Atos digital proportionals valves are CE marked according to the applicable directives (e.g. Immunity and Emission EMC Directive).
Installation, wirings and start-up procedures must be performed according to the general prescriptions shown in tech table **FS900** and in the installation notes supplied with relevent components.

4 GENERAL CHARACTERISTICS

Assembly position	Any position
Subplate surface finishing to ISO 4401	Acceptable roughness index: Ra ≤ 0,8, recommended Ra 0,4 – Flatness ratio 0,01/100
MTTFd valves according to EN ISO 13849	75 years, see technical table P007
Ambient temperature range	**Standard** = -20°C ÷ +70°C **/PE** option = -20°C ÷ +70°C **/BT** option = -40°C ÷ +60°C
Storage temperature range	**Standard** = -20°C ÷ +80°C **/PE** option = -20°C ÷ +80°C **/BT** option = -40°C ÷ +70°C
Surface protection	Zinc coating with black passivation
Corrosion resistance	Salt spray test (EN ISO 9227) > 200 h
Compliance	CE according to EMC directive 2014/30/EU (Immunity: EN 61000-6-2; Emission: EN 61000-6-3) RoHS Directive 2011/65/EU as last update by 2015/863/EU REACH Regulation (EC) n°1907/2006

5 HYDRAULIC CHARACTERISTICS - based on mineral oil ISO VG 46 at 50 °C

Valve model	**DPZE-*-1**	**DPZE-*-2**		**DPZE-*-4**	**DPZE-*-6**
Pressure limits [bar]	ports **P**, **A**, **B**, **X** = 350; **T** = 250 (10 with internal drain /D) **Y** = 10				
Spool type	**L5, S5, D5**	**L3, S3, D3**	**L5, S5, D5**		
Nominal flow Δp P-T [l/min] **(1)** Δp= 10 bar	100	160	250	480	640
Δp= 30 bar	160	270	430	830	1100
Max permissible flow	180	400	550	900	1500
Piloting pressure [bar]	min = 25; max = 350 (option /G advisable for pilot pressure > 150 bar)				
Piloting volume [cm³]	1,4	3,7		9,0	21,6
Piloting flow **(2)** [l/min]	1,7	3,7		6,8	14,4
Leakage **(3)** [l/min]	0,15 / 0,5	0,2 / 0,6		0,3 / 1,0	1,0 / 3,0
Response time **(4)** [ms]	≤ 80	≤ 100		≤ 120	≤ 180
Hysteresis	≤ 5 [% of max regulation]				
Repeatibility	± 1 [% of max regulation]				

Note: above performance data refer to valves coupled with Atos electronic drivers, see section 2

(1) For different Δp, the max flow is in accordance to the diagrams in section 8.2
(2) With step reference input signal 0 ÷100 %
(3) At P = 100/350 bar
(4) 0-100% step signal

6 ELECTRICAL CHARACTERISTICS

Coil voltage code	**Standard** standard coil to be used with Atos drivers with power supply 24VDC	option **/6** optional coil to be used with Atos drivers with power supply 12 VDC	option **/18** optional coil to be used with electronic drivers not supplied by Atos, with power supply 24 VDC and max current limited to 1A
Max. solenoid current	2,5 A	3 A	1,2 A
Coil resistance R at 20°C	3,1 Ω	2,1 Ω	13,1 Ω
Insulation class	H (180°) Due to the occuring surface temperatures of the solenoid coils, the European standards ISO 13732-1 and EN982 must be taken into account		
Protection degree to DIN EN60529	**IP 65** (with connectors 666 correctly assembled)		
Duty factor	Continuous rating (ED=100%)		
Certification	**cURus** North American Standards		

7 SEALS AND HYDRAULIC FLUID - for other fluids not included in below table, consult our technical office

Seals, recommended fluid temperature	NBR seals (standard) = -20°C ÷ +80°C, with HFC hydraulic fluids = -20°C ÷ +50°C FKM seals (/PE option) = -20°C ÷ +80°C HNBR seals (/BT option) = -40°C ÷ +60°C, with HFC hydraulic fluids = -40°C ÷ +50°C		
Recommended viscosity	20 ÷ 100 mm²/s - max allowed range 15 ÷ 380 mm²/s		
Max fluid contamination level — normal operation	ISO4406 class 18/16/13 NAS1638 class 7		see also filter section at www.atos.com or KTF catalog
Max fluid contamination level — longer life	ISO4406 class 16/14/11 NAS1638 class 5		
Hydraulic fluid	**Suitable seals type**	**Classification**	**Ref. Standard**
Mineral oils	NBR, FKM, HNBR	HL, HLP, HLPD, HVLP, HVLPD	DIN 51524
Flame resistant without water	FKM	HFDU, HFDR	ISO 12922
Flame resistant with water	NBR, HNBR	HFC	

8 DIAGRAMS (based on mineral oil ISO VG 46 at 50 °C)

8.1 Regulation diagrams (values measure at Δp 10 bar P-T)

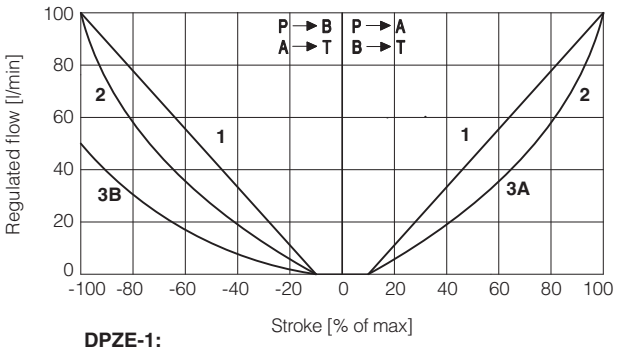

DPZE-1:
1 = L5 **2** = S5 **3A** = D5 (P → A, A → T)
3B = D5 (P → B, B → T)

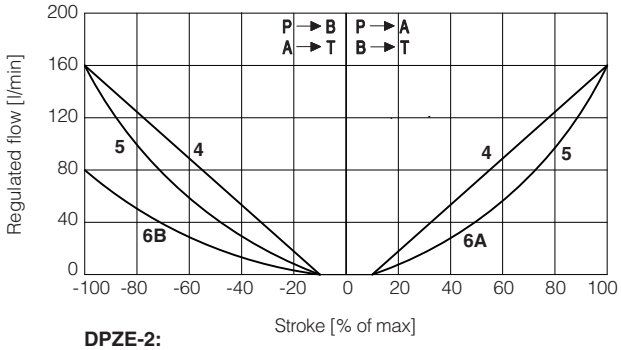

DPZE-2:
4 = L3 **5** = S3 **6A** = D3 (P → A, A → T)
6B = D3 (P → B, B → T)

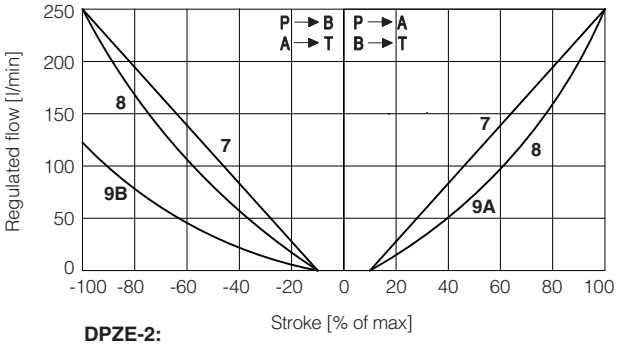

DPZE-2:
7 = L5 **8** = S5 **9A** = D5 (P → A, A → T)
9B = D5 (P → B, B → T)

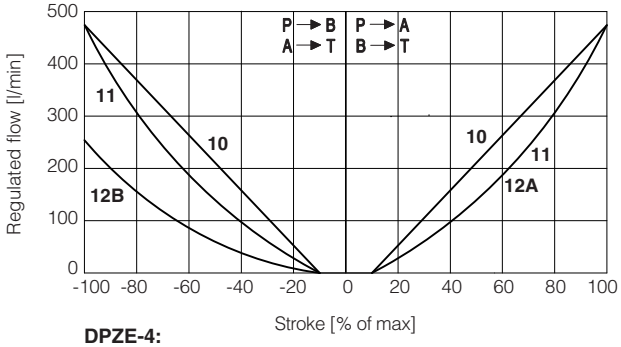

DPZE-4:
10 = L5 **11** = S5 **12A** = D5 (P → A, A → T)
12B = D5 (P → B, B → T)

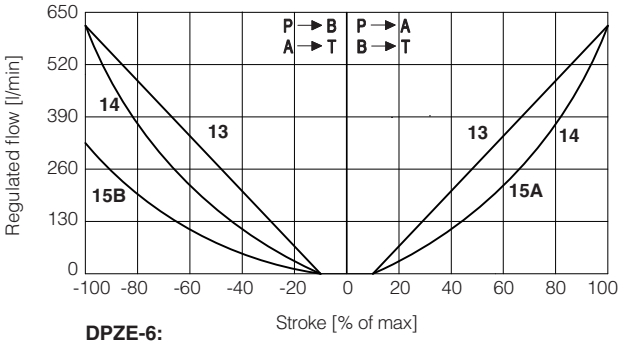

DPZE-6:
13 = L5 **14** = S5 **15A** = D5 (P → A, A → T)
15B = D5 (P → B, B → T)

Note: Hydraulic configuration vs. reference signal for configuration 71 and 73 (standard and option /B)

Reference signal 0 ÷ +10 V / 12 ÷ 20 mA } P → A / B → T

Reference signal 0 ÷ - 10 V / 12 ÷ 4 mA } P → B / A → T

8.2 Flow /Δp diagram

stated at 100% of spool stroke

DPZE-1:
1 = spools L5, S5, D5

DPZE-2:
2 = spools L3, S3, D3
3 = spools L5, S5, D5

DPZE-4:
4 = spools L5, S5, D5

DPZE-6:
5 = spools L5, S5, D5

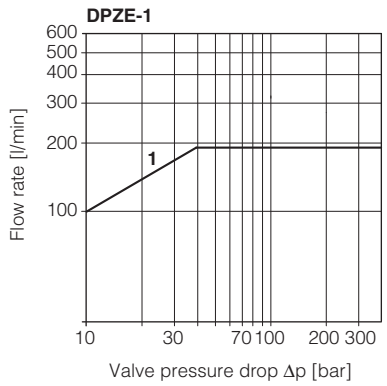

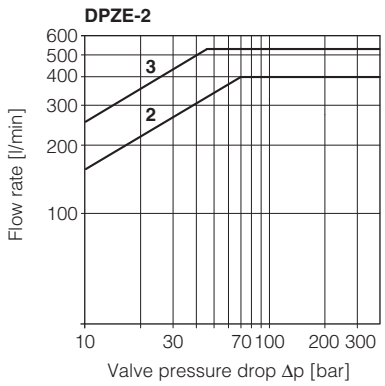

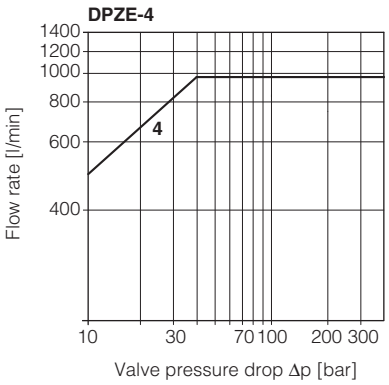

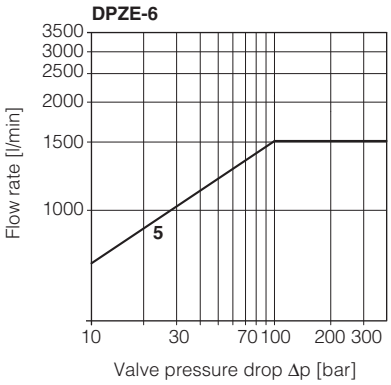

8.3 Response time (measured at pilot pressure = 100 bar)

The response times in below diagrams are measured at different steps of the reference input signal. They have to be considered as average values. For the valves with digital electronics the dynamics performances can be optimized by setting the internal software parameters.

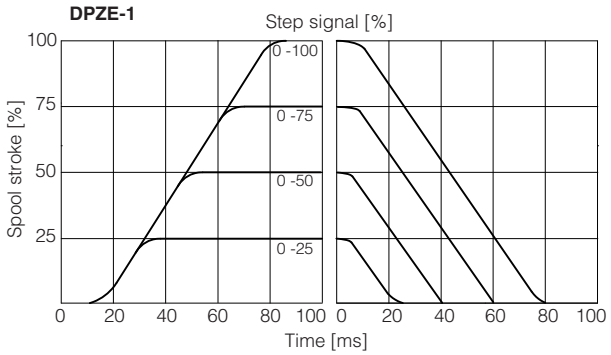

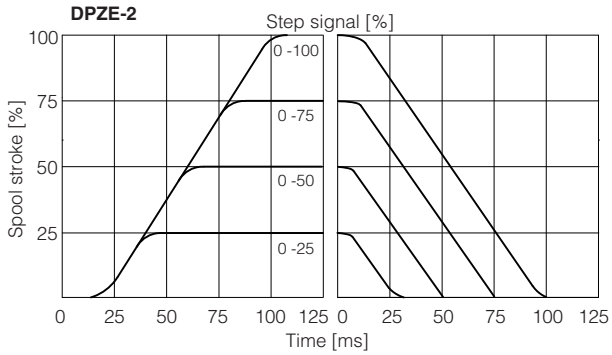

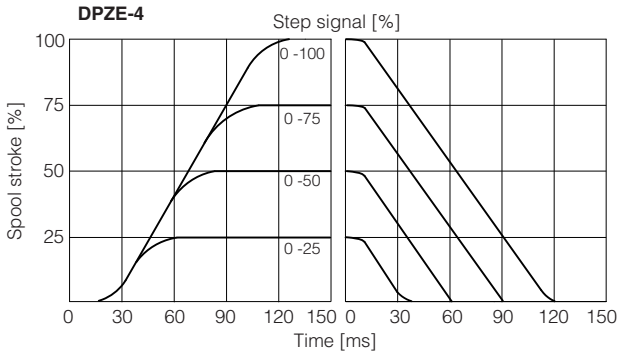

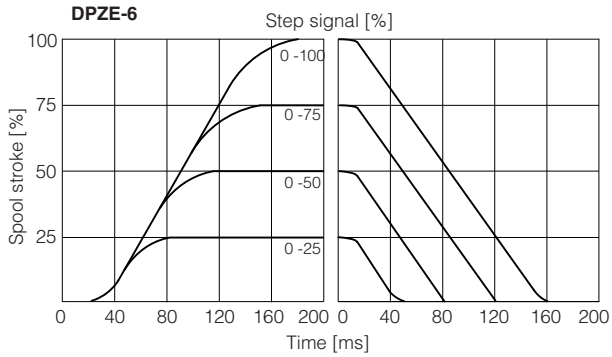

8.4 Operation as throttle valve

Single solenoid valves (*51) can be used as simple throttle valves:
Pmax = 250 bar

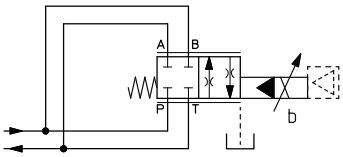

DPZE-A-	151-L5	251-L5	451-L5	651-L5
Max flow [l/min] Δp = 15 bar	320	860	1600	2200

9 HYDRAULIC OPTIONS

B = solenoid at side B of the main stage (side A of pilot valve).

D = Internal drain.
Pilot and drain configuration can be modified as shown in section 12.
The valve's standard configuration provides internal pilot and external drain.

E = External pilot (through port X).
Pilot and drain configuration can be modified as shown in section 12.
The valve's standard configuration provides internal pilot and external drain.

G = Pressure reducing valve installed between pilot valve and main body with fixed setting:
DPZE-1 and DPZE-2 = **30 bar**
DPZE-4 and DPZE-6 = **40 bar**
It is advisable for valves with internal pilot in case of system pressure higher than 150 bar.

Functional Scheme

Example of configuration 7*
3 positions, spring centered

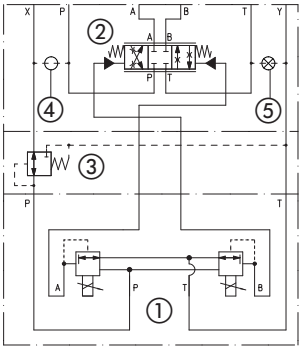

① Pilot valve
② Main stage
③ Pressure reducing valve
④ Plug to be added for external pilot trough port X
⑤ Plug to be removed for internal drain through port T

10 SOLENOID CONNECTION

PIN	SIGNAL	TECHNICAL SPECIFICATION	Connector code 666
1	**COIL**	Power supply	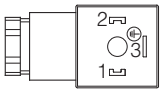
2	**COIL**	Power supply	
3	**GND**	Ground	

11 COILS WITH SPECIAL CONNECTORS

Options -J
Coil type COZEJ
AMP Junior Timer connector
Protection degree IP67

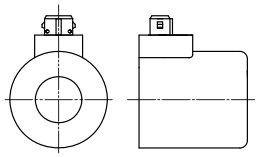

Options -K
Coil type COZEK
Deutsch connector, DT-04-2P male
Protection degree IP67

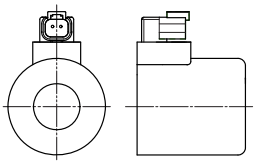

Options -S
Coil type COZES
Lead Wire connection
Cable lenght = 180 mm

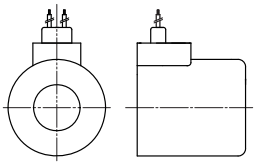

12 PLUGS LOCATION FOR PILOT/DRAIN CHANNELS

Depending on the position of internal plugs, different pilot/drain configurations can be obtained as shown below.
To modify the pilot/drain configuration, proper plugs must only be interchanged. The plugs have to be sealed using loctite 270.
Standard valves configuration provides internal pilot and external drain

DPZE-1 Pilot channels

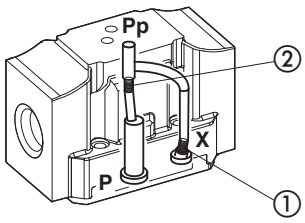

Drain channels

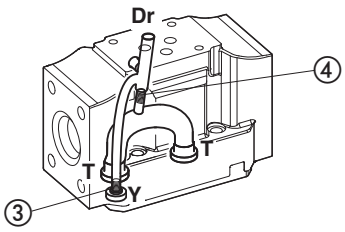

Internal piloting: blinded plug SP-X300F ① in X;
External piloting: blinded plug SP-X300F ② in Pp;
Internal drain: blinded plug SP-X300F ③ in Y;
External drain: blinded plug SP-X300F ④ in Dr.

DPZE-2 Pilot channels

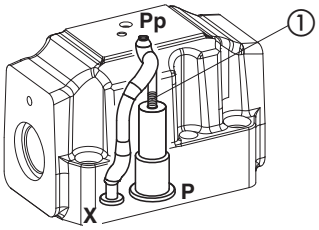

Drain channels

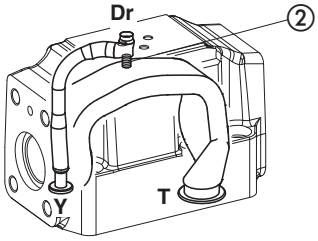

Internal piloting: Without blinded plug SP-X300F ①;
External piloting: Add blinded plug SP-X300F ①;
Internal drain: Without blinded plug SP-X300F ②;
External drain: Add blinded plug SP-X300F ②.

DPZE-4 Pilot channels

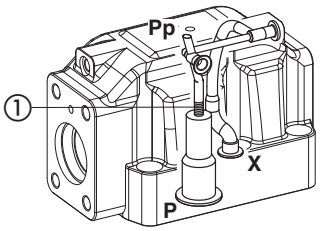

Drain channels

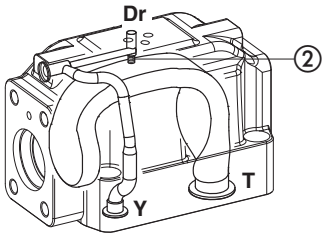

Internal piloting: Without blinded plug SP-X500F ①;
External piloting: Add blinded plug SP-X500F ①;
Internal drain: Without blinded plug SP-X300F ②;
External drain: Add blinded plug SP-X300F ②.

DPZE-6 Pilot channels

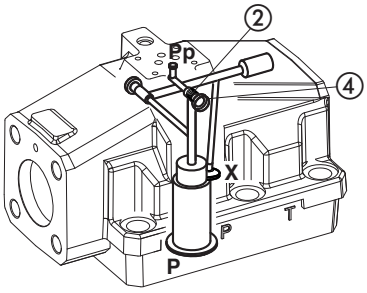

Pilot channels

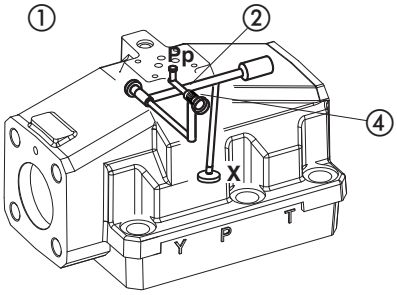

Drain channels

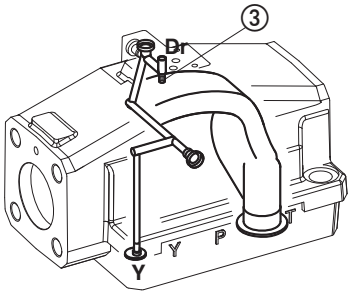

Internal piloting:
plug SP-X325A in pos ②;

External piloting:
plug SP-X325A in pos ②;

Internal drain:
Without blinded plug SP-X300F ③;

External drain:
Add blinded plug SP-X300F ③.

To reach the orifice ②, remove plug ④ = G 1/8”

13 FASTENING BOLTS AND SEALS

Type	Size	Fastening bolts	Seals
DPZE	**1** = 10	4 socket head screws M6x40 class 12.9 Tightening torque = 15 Nm	5 OR 2050; Diameter of ports A, B, P, T: Ø 11 mm (max) 2 OR 108 Diameter of ports X, Y: Ø = 7 mm (max)
	2 = 16	4 socket head screws M10x50 class 12.9 Tightening torque = 70 Nm 2 socket head screws M6x45 class 12.9 Tightening torque = 15 Nm	4 OR 130; Diameter of ports A, B, P, T: Ø 20 mm (max) 2 OR 2043 Diameter of ports X, Y: Ø = 9 mm (max)
	4 = 25	6 socket head screws M12x60 class 12.9 Tightening torque = 125 Nm	4 OR 4112; Diameter of ports A, B, P, T: Ø 25 mm (max) 2 OR 3056 Diameter of ports X, Y: Ø = 11.5 mm (max)
	6 = 32	6 socket head screws M20x80 class 12.9 Tightening torque = 600 Nm	4 OR 144; Diameter of ports A, B, P, T: Ø 34 mm (max) 2 OR 3056 Diameter of ports X, Y: Ø = 7 mm (max)

14 INSTALLATION DIMENSIONS [mm]

DPZE-1*

ISO 4401: 2005
Mounting surface: 4401-05-05-0-05
(see table P005)

Mass [kg]

	A
DPZE-*-25*	6,9
DPZE-*-27*	7,3
Option /G	+0,9

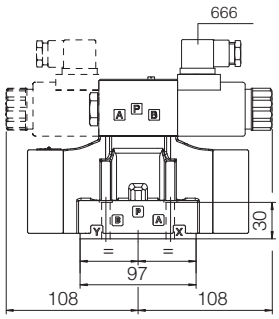

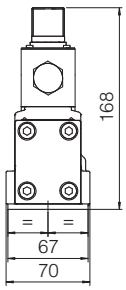

option /G

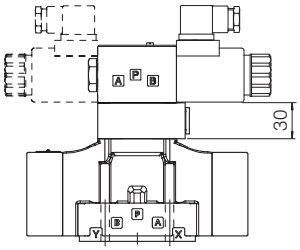

DPZE-2*

ISO 4401: 2005
Mounting surface: 4401-07-07-0-05
(see table P005)

Mass [kg]

	A
DPZE-*-25*	11,9
DPZE-*-27*	12,8
Option /G	+0,9

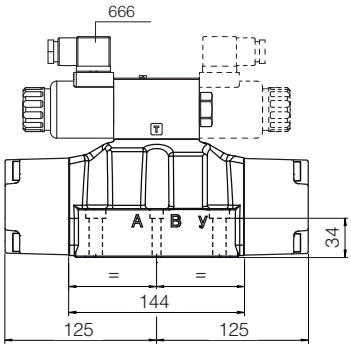

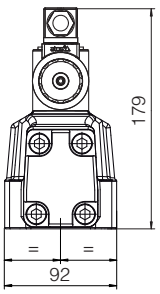

Option /G

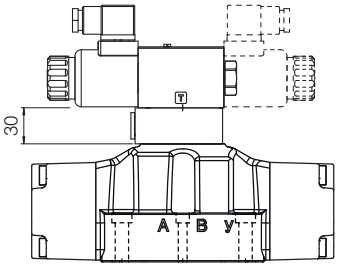

DPZE-4*

ISO 4401: 2005
Mounting surface: 4401-08-08-0-05
(see table P005)

Mass [kg]

	A
DPZE-*-45*	17,1
DPZE-*-47*	18
Option /G	+0,9

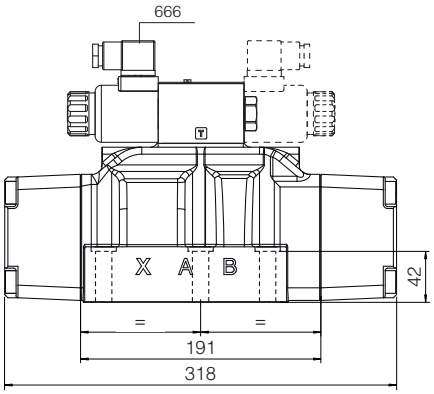

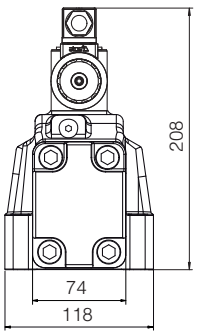

Option /G

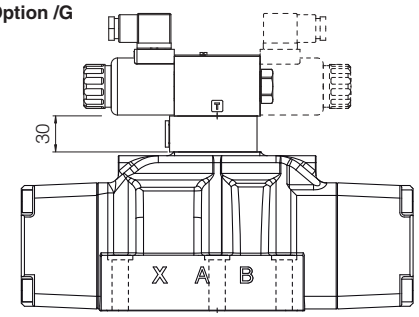

Dotted line = double solenoid version

DPZE-6*

ISO 4401: 2005
Mounting surface: 4401-10-09-0-05
(see table P005)

Mass [kg]

	A
DPZE-*-65*	44
DPZE-*-67*	44,5
Option /G	+1

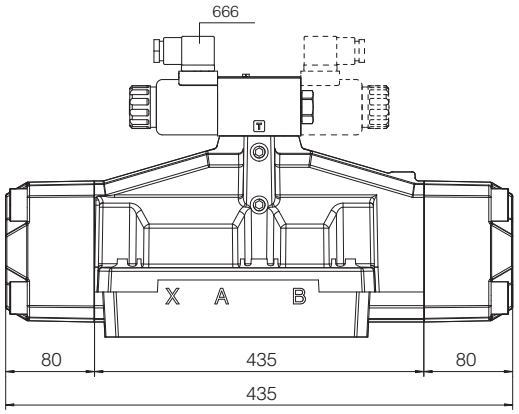

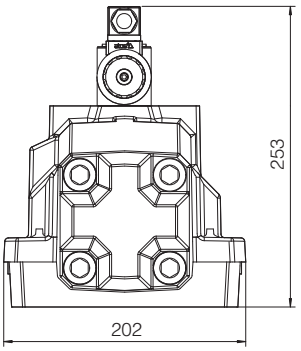

Option /G

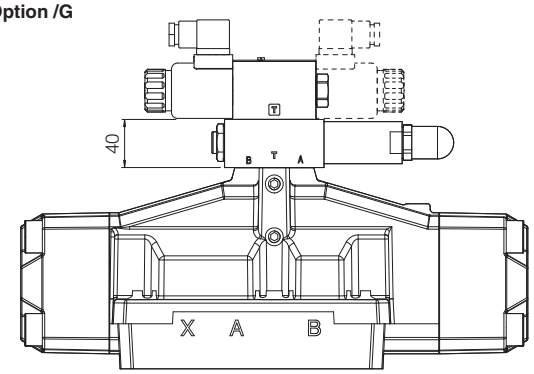

Dotted line = double solenoid version

Safety proportional valves with on-off signals

directional valves with on-board driver and LVDT transducer

IEC 61508 Safety Integrity Level and **ISO 13849** Performance Level - certified by

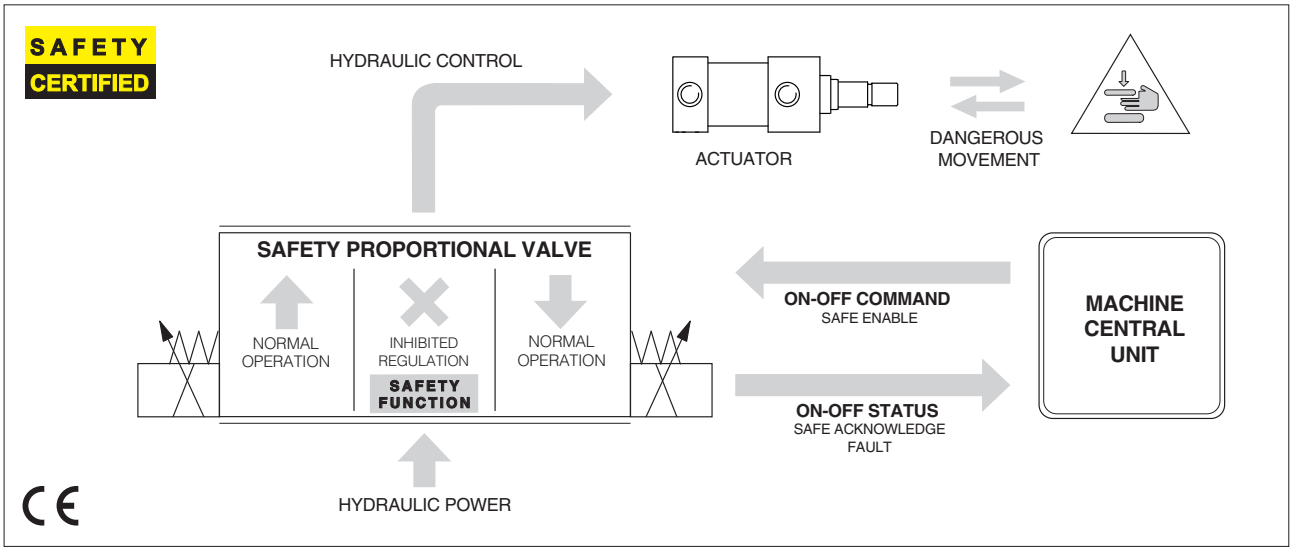

1 GENERAL DESCRIPTION

Safety proportional valves with on-off signals are identified by option /K and are intended for use in hydraulic circuits of machines which must comply with safety requirements of Machine Directive 2006/42/EC.

They are designed to perform **Safety Functions**, in addition to the standard control of direction, speed, pressure/force or position of hydraulic actuators, depending to the valve features.

The Safety Function is operated to reduce the potential dangerous risks which may happen in a specific phase of the machine cycle.
It is activated by the machine central unit (PLC) which inhibits the regulation of proportional valve /K via on-off enable signals in case of emergency or for specific requirements along the working cycle.

Upon valve's disable command input, the valve driver generates on-off output signals as soon the spool has reached the safety position, confirming that hydraulic regulation has been inhibited. The machine central unit (PLC) manages this information as "safe condition".

Safety proportional valves with option /K are certified by TÜV in compliance with IEC 61508 and ISO 13849

2 CERTIFICATION

IEC 61508, IEC 61511, IEC 62061	max **SIL 2** for **non-redundant** safety architecture max **SIL 3** for **redundant** safety architecture	See techinical table Y010 for details about SIL, PL and safety architetures
ISO 13849	**category 1, PL c** for **non-redundant** safety architecture **category 4, PL e** for **redundant** safety architecture	

3 VALVES RANGE

Option /K is available for high performance proportional directional valves and servoproportional valves with TES/LES on-board digital driver or TEZ/LEZ axis controller.

It adds the safety functions to standard control of direction, speed, pressure/force (for SP, SF, SL version) and position (for TEZ, LEZ versions).

Valve's performance characteristics and overall dimensions remains unchanged as per standard valve models, refer to specific FS** technical tables.

High perfomance proportionals:
DHZO-TES, DKZOR-TES - direct, positive spool overlap - technical table **FS165**
DPZO-TES - piloted, positive spool overlap - technical table **FS172**
DPZO-LES - piloted, positive spool overlap - technical table **FS175**

Servoproportionals:
DHZO-TES, DKZOR-TES - direct, zero spool overlap - technical tables **FS168**
DPZO-LES - piloted, zero spool overlap - technical table **FS178**
DLHZO-TES, DLKZOR-TES - direct, zero spool overlap - technical tables **FS180**

Servoproportionals with TEZ/LEZ axis controller:
DHZO-TEZ, DKZOR-TEZ - direct, zero spool overlap - technical tables **FS620**
DPZO-LEZ - piloted, zero spool overlap - technical tables **FS630**
DLHZO-TEZ, DLKZOR-TEZ - direct, zero spool overlap - technical tables **FS610**

4 FUNCTIONAL DESCRIPTION

Valves with option /K are designed to receive on-off enable signals from the machine central unit in order to inhibit the valve's regulation.
When this enable signal is switched OFF, the current to the valve's solenoid is safely cut-off, while the valve's diagnostics and communication remain active to continuously exchange its status with the machine central unit.
In consequence of the solenoid current cut-off, the valve's spool is moved by the spring towards the safe rest position and then the valve regulation is consequently inhibited.
When the spool has reached the safe position, the valve's driver generates an on-off output signal confirming to the machine central unit that the valve is in SAFE condition.
The time required by the valve's spool to reach the safe position is detailed in section 5

Safe enable input signal - SAFE_ENABLE

The SAFE_ENABLE is the command signal to cut-off the current to the solenoids in order to inhibit the valve's regulation:

- inhibited regulation: SAFE_ENABLE = **0 VDC**
- permitted regulation: SAFE_ENABLE = **24 VDC**

Double solenoids valves are equipped with two independent enable circuits SAFE_ENABLE 1 and SAFE_ENABLE 2 permitting to:

a) cut-off the current to both solenoids when the valve regulation must be inhibited in both directions
b) cut-off the current to one solenoid when only one side of the valve regulation must be inhibited. This condition permits to intercept the actuator movement in one direction, permitting the actuator movement in the opposite direction (typical in motion/non-motion controls)

Safe enable acknowledge output signal - SAFE_ENABLE_ACK

The SAFE_ENABLE_ACK is the output signal generated by the driver to confirm that the valve has effectively reached the safe position in consequence of SAFE_ENABLE command switch-off.
SAFE_ENABLE_ACK is switched ON (24 VDC) when the internal diagnostics verifies that solenoid current has been cut-off and the spool, monitored by the LVDT transducer, has reached the safe position.

Fault output signal – FAULT

Fault signal is a diagnostic output which states faults or warning according to the valve's status
This signal must be monitored by the machine central unit in addition to the SAFE_ENABLE_ACK signal, to intercept failures which may compromise the valve safety function.
The FAULT signal is switched OFF (0 VDC) when the internal diagnostics detects valve failures or incorrect behavior (e.g. : spool sticking, solenoid short circuits, missing coils connection, reference signal cable broken for 4 ÷ 20 mA input, etc)
For piloted valves the FAULT signal = 0 VDC indicates also the absence of pilot pressure.

5 SWITCH-OFF TIME

The valve switch-off time is the time between the SAFE_ENABLE signal = 0 VDC and the SAFE_ENABLE ACK signal = 24 VDC.
It is influenced by the working conditions like flow, pressure and fluid viscosity.

The switch-off times shown in the table are considered in the following conditions:
- max flow and max pressure values as per specific technical table of each valve model
- fluid viscosity 46 mm^2/s
- fluid contamination level: ISO4406 CLASS 18/16/13

The following switch-off times can be considered as the longest ones.

For different working conditions, consult Atos technical office.

Valve model	**DHZO**	**DKZOR**	**DLHZO**	**DLKZOR**	**DPZO-1**	**DPZO-2**	**DPZO-4 DPZO-4M**	**DPZO-6**	**DPZO-8**
Switch-off time [ms]	50	80	40	60	180	250	300	350	400

6 FUNCTIONAL EXAMPLES

The following examples show the condition of a double solenoid valve and of the controlled actuator depending to the SAFE_ENABLE status.

Valve normal operation

Input signals [VDC]		Output signals [VDC]	
SAFE_ENABLE 1	**SAFE_ENABLE 2**	**SAFE_ENABLE 1_ACK**	**SAFE_ENABLE 2_ACK**
24	24	0	0

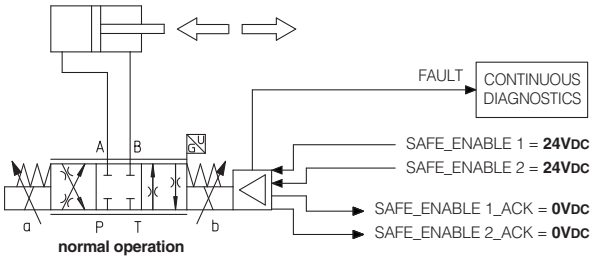

Valve safe operation with P-A/B-T regulation inhibited to prevent the actuator forward movement

Input signals [VDC]		Output signals [VDC]	
SAFE_ENABLE 1	**SAFE_ENABLE 2**	**SAFE_ENABLE 1_ACK**	**SAFE_ENABLE 2_ACK**
0	24	24	0

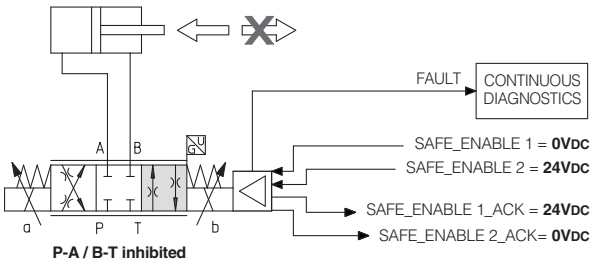

Valve safe operation with P-B/A-T regulation inhibited to prevent the actuator backward movement

Input signals [VDC]		Output signals [VDC]	
SAFE_ENABLE 1	**SAFE_ENABLE 2**	**SAFE_ENABLE 1_ACK**	**SAFE_ENABLE 2_ACK**
24	0	0	24

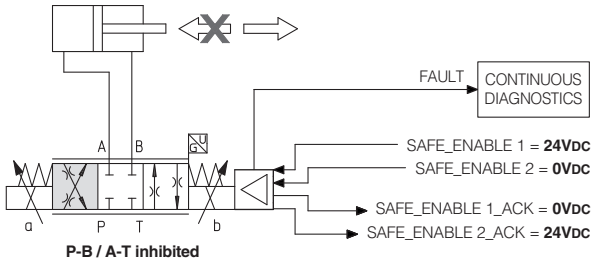

Valve safe operation with regulation completely inhibited

Input signals [VDC]		Output signals [VDC]	
SAFE_ENABLE 1	**SAFE_ENABLE 2**	**SAFE_ENABLE 1_ACK**	**SAFE_ENABLE 2_ACK**
0	0	24	24

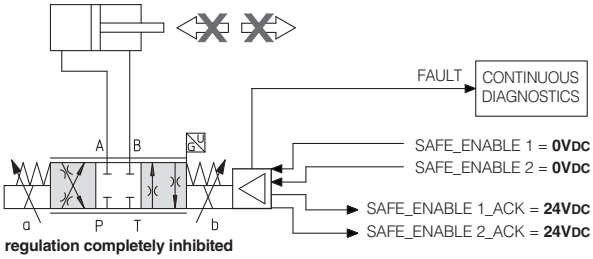

INHIBITED SPOOL POSITION
SAFE_ENABLE = **0VDC**

PERMITTED SPOOL POSITION
SAFE_ENABLE = **24VDC**

INHIBITED DIRECTION

PERMITTED DIRECTION

7 INHIBITED / PERMITTED SPOOL POSITION

The below tables show the inhibited / permitted spool position depending to the SAFE_ENABLE status for all models of safety proportional valves.

Note: the inhibition of the actuator direction may be affected by other valves present in the circuit, then the whole hydraulic system where the valve /K is applied must be considered.

7.1 High performance proportionals

INHIBITED SPOOL POSITION

PERMITTED SPOOL POSITION

DHZO-TES, DKZOR-TES - direct operated, positive spool overlap - technical table **FS165**

Input signals [VDC]		Output signals [VDC]		Configuration **51, 53**		Configuration **71, 72, 73**	
				standard	option /B	standard	option /B
SAFE ENABLE 1	SAFE ENABLE 2	SAFE ENABLE 1_ACK	SAFE ENABLE 2_ACK	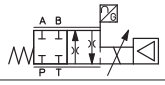	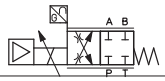	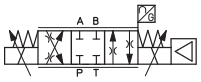	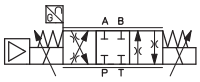
24		0					
0		24					
24	24	0	0	①	①	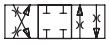	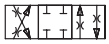
0	24	24	0			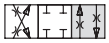	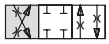
24	0	0	24			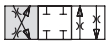	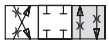
0	0	24	24			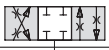	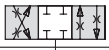
						①	①

DPZO-TES - pilot operated, positive spool overlap - technical table **FS172**

Input signals [VDC]		Output signals [VDC]		Configuration **51, 53**		Configuration **71, 72, 73**	
				standard	option /B	standard	option /B
SAFE ENABLE 1	SAFE ENABLE 2	SAFE ENABLE 1_ACK	SAFE ENABLE 2_ACK	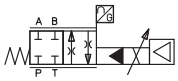	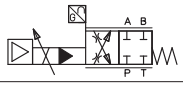	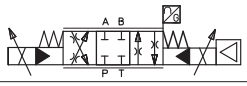	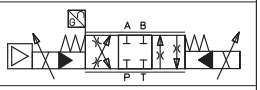
24		0					
0		24					
24	24	0	0	①	①	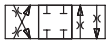	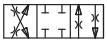
0	24	24	0			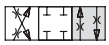	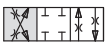
24	0	0	24			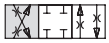	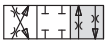
0	0	24	24			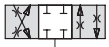	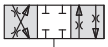
						①	①

DPZO-LES - pilot operated, positive spool overlap - technical table **FS175**

Input signals [VDC]	Output signals [VDC]	Configuration **71, 72, 73**	
		standard	option /B
SAFE ENABLE 1	SAFE ENABLE 1_ACK	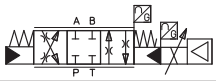	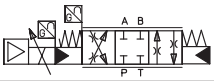
24	0		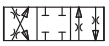
0	24	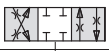	
		①	①

① = Spool safety rest position

7.2 Servoproportionals

INHIBITED SPOOL POSITION

PERMITTED SPOOL POSITION

DHZO-TES/TEZ, DKZOR-TES/TEZ - direct operated, zero spool overlap - technical tables **FS168**, **FS620**

Input signals [VDC]		Output signals [VDC]		Configuration **70** standard	Configuration **70** option /B
SAFE ENABLE 1	SAFE ENABLE 2	SAFE ENABLE 1_ACK	SAFE ENABLE 2_ACK	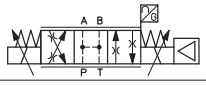	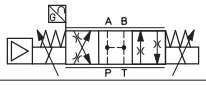
24	24	0	0		
0	24	24	0		
24	0	0	24		
0	0	24	24		
				②	②

DPZO-LES, DPZO-LEZ - pilot operated, zero spool overlap - technical table **FS178**, **FS630**

Input signals [VDC]	Output signals [VDC]	Configuration **60** standard	Configuration **60** option /B	Configuration **70** standard	Configuration **70** option /B
SAFE ENABLE 1	SAFE ENABLE 1_ACK	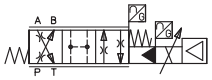		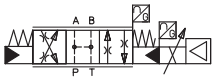	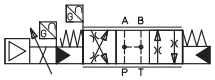
24	0	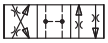	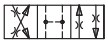		
0	24	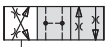			
		①	①	②	②

DLHZO-TES/TEZ, DLKZOR-TES/TEZ - direct operated, zero spool overlap - technical tables **FS180, FS610**

Input signals [VDC]	Output signals [VDC]	Configuration **40** with fail safe 1 or 3 standard	Configuration **40** with fail safe 1 or 3 option /B	Configuration **60** without fail safe standard	Configuration **60** without fail safe option /B
SAFE ENABLE 1	SAFE ENABLE 1_ACK	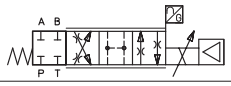	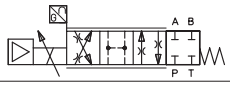	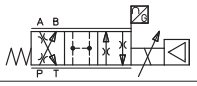	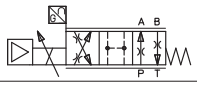
24	0		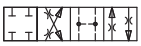	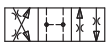	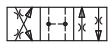
0	24				
		①	①	①	①

① = Spool safety rest position

② = Spool safety rest position for valves with zero spool overlap, configuration 70 - see 7.3

7.3 Safety rest position - for valves with zero spool overlap, configuration 70

In absence of solenoid power supply (SAFE_ENABLE1 = 0 and SAFE_ENABLE2 = 0), the valve spool is moved by the springs force to the **safety rest position** characterized by a small offset of about 1% to 6% of the total stroke in P-B / A-T configuration.

This is specifically designed to avoid that in case of interruption of solenoid power supply, the actuator moves towards an undefined direction (due to the tolerances of the zero spool overlap), with potential risk of damages or personnel injury.

Thanks to the **safety rest position** the actuator movement is suddenly stopped and it is recovered at very low speed towards the direction corresponding to the P-B/ A-T connection.

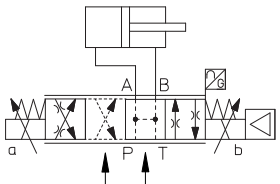

Spool position with solenoid power supply ON and reference signal = 0 (zero overlap position)

Spool offset position 1% to 6% of total stroke with solenoid power supply OFF (central safety rest position)

8 ELECTRONIC CONNECTIONS

8.1 Main connector signals - 12 pin - options /K

PIN	TES LES	TEZ LEZ	TECHNICAL SPECIFICATIONS	NOTES
1	**V+**		Power supply 24 VDC	Input - power supply
2	**V0**		Power supply 0 VDC	Gnd - power supply
3	**SAFE_ENABLE1**		Enable (24 VDC) or disable (0 VDC) the solenoid at side of the driver and position transducer, referred to V0	Input - on/off signal
4	**Q_INPUT+**		Flow (spool position) reference input signal: ±10 VDC / ±20 mA maximum range Defaults are ±10 VDC for standard and 4 ÷ 20 mA for /I option	Input - analog signal **Software selectable**
		P_INPUT+	Position reference input signal: ±10 VDC / ±20 mA maximum range	
5	**INPUT-**		Negative reference input signal for Q_INPUT+, F_INPUT+ and P_INPUT+	Input - analog signal
6	**Q_MONITOR**		Flow (spool position) monitor output signal: ±10 VDC / ±20 mA maximum range, referred to V0. Defaults are ±10 VDC for standard and 4 ÷ 20 mA for /I option	Output - analog signal **Software selectable**
		P_MONITOR	Position monitor output signal: ±10 VDC / ±20 mA maximum range, referred to V0	
7	**F_INPUT+ (1)**		Pressure/force reference input signal: ±10 VDC / ±20 mA maximum range Defaults are ±10 VDC for standard and 4 ÷ 20 mA for /I option	Input - analog signal **Software selectable**
8	**SAFE_ENABLE1_ACK**		Safe condition acknowledged (24 VDC) or unacknowledged (0 VDC) for solenoid at side of the driver and position transducer, referred to V0	Output - on/off signal
9	**SAFE_ENABLE2_ACK (2)**		Safe condition acknowledged (24 VDC) or unacknowledged (0 VDC) for solenoid at the opposite side of the driver and position transducer, referred to V0	Output - on/off signal
10	**SAFE_ENABLE2 (2)**		Enable (24 VDC) or disable (0 VDC) the solenoid at the opposite side of the driver and position transducer, referred to V0	Input - on/off signal
11	**FAULT**		Fault (0 VDC) or normal working (24 VDC), referred to V0	Output - on/off signal
PE	**EARTH**		Internally connected to driver housing	

(1) Connection NOT available for **TES/LES** in **SN** execution
(2) Connections available only for double solenoid valves

9 ELECTRICAL CHARACTERISTICS

SIGNALS	SPECIFICATIONS	NOTES
SAFE_ENABLE1 **SAFE_ENABLE2**	Input range: -3 ÷ 5 VDC (OFF state), 15 ÷ 30 VDC (ON state), 5 ÷ 15 VDC (not accepted) Input impedance: Ri > 10 kΩ	Input - on/off signal
SAFE_ENABLE1_ACK **SAFE_ENABLE2_ACK**	ON state depends on input power supply V+: ON state > V+ - 2V @ max 50 mA e.g. in case of V+ = 24V, the ON state > 22V OFF state < 1 V; External negative voltage not allowed (e.g. due to inductive loads)	Output - on/off signal
FAULT		

Note: for the electrical characteristic of all other signals, refer to the technical table of each valve model - see section 3

9.1 Connections layout

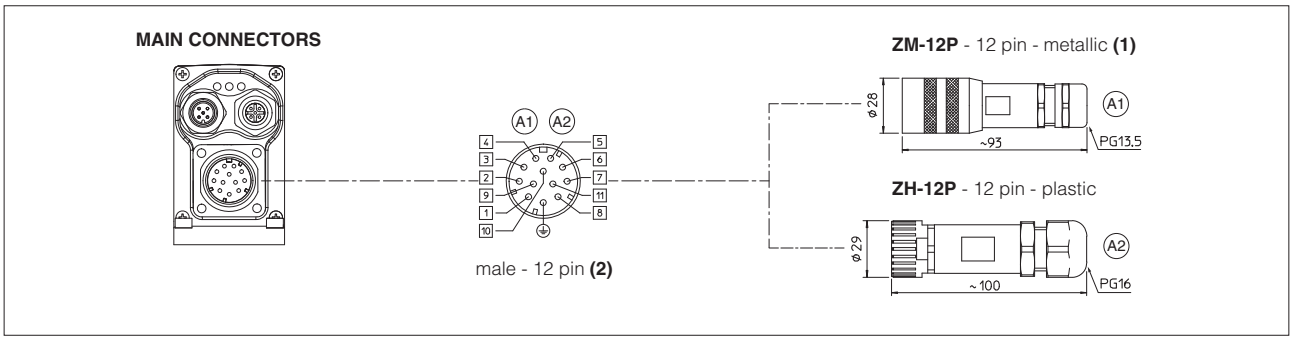

(1) Use of metallic connectors is strongly recommended in order to fulfill EMC requirements
(2) Pin layout always referred to driver's view
For fieldbus and/or transducers connections, refer to specific technical tables of each valve model - see section 3

10 BLOCK DIAGRAMS

10.1 Single solenoid valves

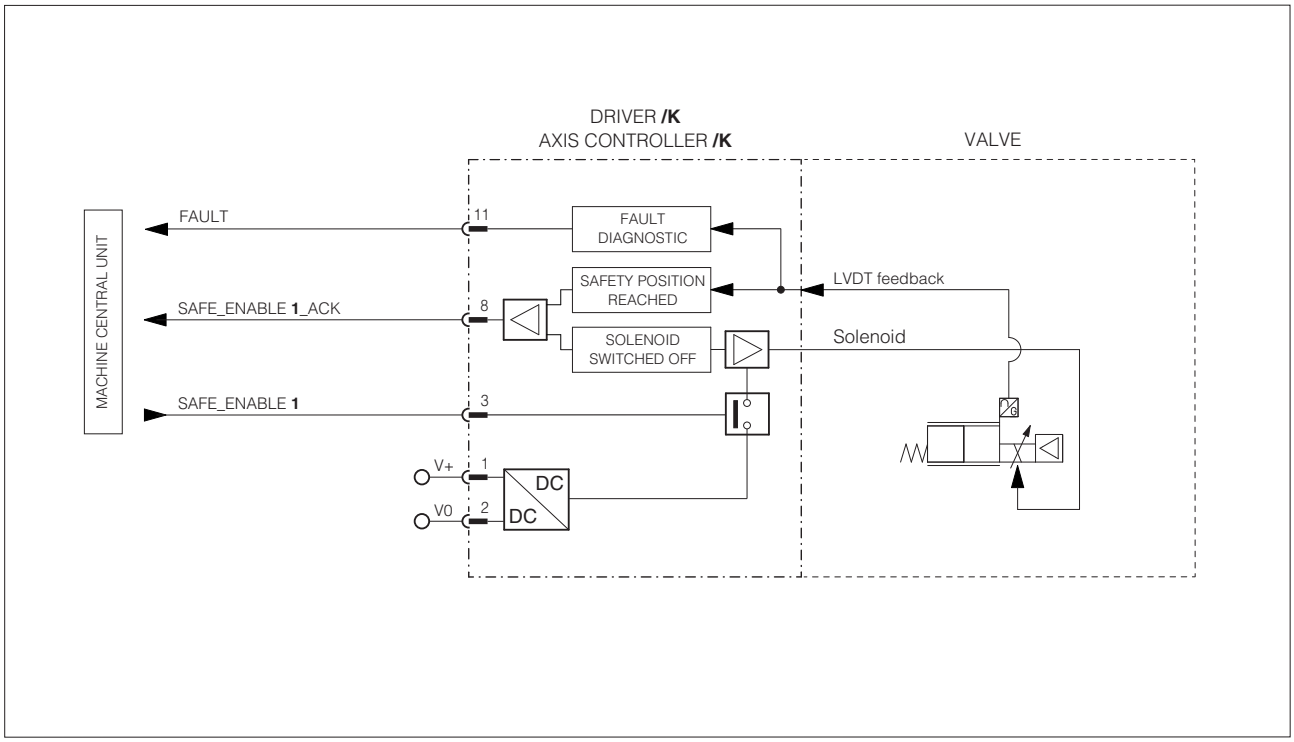

10.2 Double solenoid valves

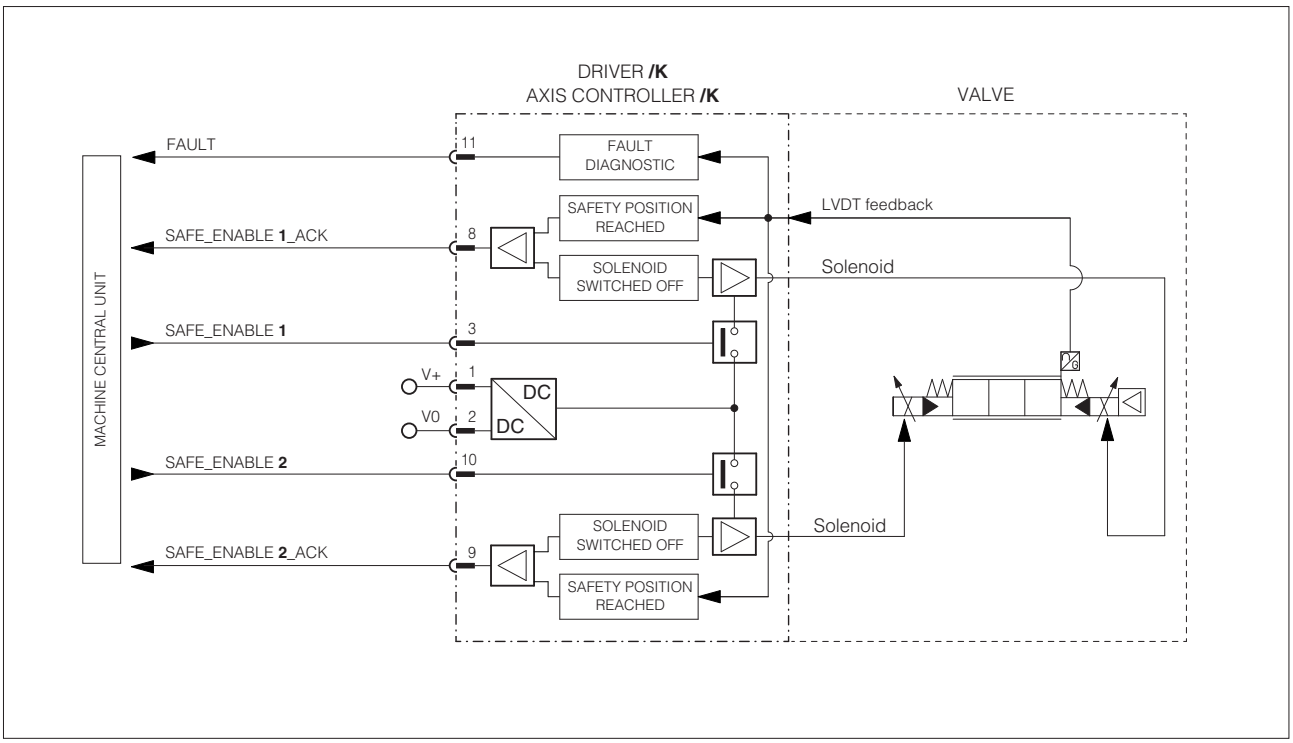

11 RELATED DOCUMENTATION

General tables:

Y010 Basics for safety components
FS001 Basics for digital electrohydraulics
FS500 Digital proportional valves with p/Q control
FS900 Operating and maintenance information for proportional valves
GS500 Programming tools
GS510 Fieldbus
K800 Electric and electronic connectors
P005 Mounting surfaces for electrohydraulic valves

Valves technical tables:

FS165 DHZO-TES, DKZOR-TES, direct operated
FS172 DPZO-TES, pilot operated
FS175 DPZO-LES, pilot operated
FS168 DHZO-TES, DKZOR-TES, direct operated, zero spool overlap
FS180 DLHZO-TES, DLKZOR-TES, direct operated, sleeve execution
FS178 DPZO-LES, pilot operated, zero spool overlap
FS610 DLHZO-TEZ, DLKZOR-TEZ digital proportional valves with on-board axis card
FS620 DHZO-TEZ, DKZOR-TEZ digital proportional valves with on-board axis card
FS630 DPZO-LEZ digital proportional valves with on-board axis card

Commissioning and troubleshooting tables:

QF300 Quickstart for TES direct operated proportional valves (supplied with the valve)
QF320 Quickstart for TES/LES pilot operated proportional valves (supplied with the valve)

Operating and fieldbus manuals for TES and LES:

E-MAN-RI-LES - TES and LES drivers user manual
E-MAN-RI-LES-S - TES and LES drivers with p/Q control user manual
E-MAN-S-BC - CANopen protocol programming manual
E-MAN-S-BP - PROFIBUS DP protocol programming manual
E-MAN-S-EH - EtherCAT protocol programming manual
E-MAN-S-EW - POWERLINK protocol programming manual
E-MAN-S-EI - EtherNet/IP protocol programming manual
E-MAN-S-EP - PROFINET IRT protocol programming manual

Operating and fieldbus manuals for TEZ and LEZ:

Z-MAN-RI-LEZ - TEZ and LEZ controllers user manual
Z-MAN-RI-LEZ-S - TEZ and LEZ controllers with p/Q control user manual
Z-MAN-S-BC - CANopen protocol programming manual
Z-MAN-S-BP - PROFIBUS DP protocol programming manual
Z-MAN-S-EH - EtherCAT protocol programming manual
Z-MAN-S-EW - POWERLINK protocol programming manual
Z-MAN-S-EI - EtherNet/IP protocol programming manual
Z-MAN-S-EP - PROFINET IRT protocol programming manual

SIL safety manuals for operating, installation and maintenance (on request):

TT366 DHZO-TES/TEZ, DKZOR-TES/TEZ
TT367 DLHZO-TES/TEZ, DLKZOR-TES/TEZ
TT368 DPZO-TES/LES/LEZ

TÜV certificates (on request):

TUV IT 22 SIL 0092 Safety proportional valves, direct operated
TUV IT 22 SIL 0091 Safety proportional valves, piloted operated

Safety proportional valves with double power supply

directional valves with on-board driver and LVDT transducer

IEC 61508 Safety Integrity Level and **ISO 13849** Performance Level - certified by

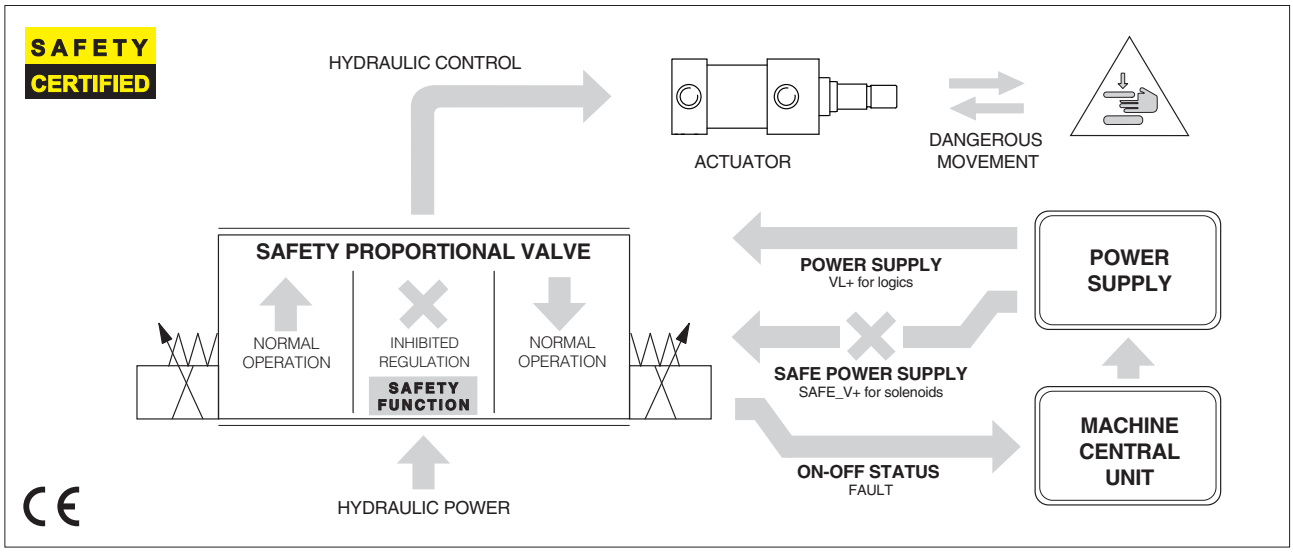

1 GENERAL DESCRIPTION

Safety proportional valves with double power supply are identified by option /U and are intended for use in hydraulic circuits of machines which must comply with safety requirements of Machine Directive 2006/42/EC.

They are designed to perform **Safety Functions**, in addition to the standard control of direction, speed, pressure/force or position of hydraulic actuators, depending to the valve features.

The Safety Function is operated to reduce the potential dangerous risks which may happen in a specific phase of the machine cycle.
It is activated by the machine central unit (PLC) which inhibits the regulation of proportional valve /U by removing the safe power supply to the valve solenoids in case of emergency or for specific requirements along the working cycle.

Upon solenoid power supply interruption, the valve driver remains active thanks to the separated power supply for logics, thus providing fault signal and communication to the machine central unit (PLC) which manages these information as diagnostic signals.

Safety proportional valves with option /U are certified by TÜV in compliance with IEC 61508 and ISO 13849

2 CERTIFICATION

IEC 61508, IEC 61511, IEC 62061	max **SIL 2** for **non-redundant** safety architecture max **SIL 3** for **redundant** safety architecture	See techinical table Y010 for details about SIL, PL and safety architetures
ISO 13849	**category 1, PL c** for **non-redundant** safety architecture **category 4, PL e** for **redundant** safety architecture	

3 VALVES RANGE

Option /U is available for high performance proportional directional valves and servoproportional valves with TES/LES on-board digital driver or TEZ/LEZ axis controller.

It adds the safety functions to standard control of direction, speed, pressure/force (for SP, SF, SL version) and position (for TEZ, LEZ versions).

Valve's performance characteristics and overall dimensions remains unchanged as per standard valve models, refer to specific FS** technical tables.

High perfomance proportionals:
DHZO-TES, DKZOR-TES - direct, positive spool overlap - technical table **FS165**
DPZO-TES - piloted, positive spool overlap - technical table **FS172**
DPZO-LES - piloted, positive spool overlap - technical table **FS175**

Servoproportionals:
DHZO-TES, DKZOR-TES - direct, zero spool overlap - technical tables **FS168**
DPZO-LES - piloted, zero spool overlap - technical table **FS178**
DLHZO-TES, DLKZOR-TES - direct, zero spool overlap - technical tables **FS180**

Servoproportionals with TEZ/LEZ axis controller:
DHZO-TEZ, DKZOR-TEZ - direct, zero spool overlap - technical tables **FS620**
DPZO-LEZ - piloted, zero spool overlap - technical tables **FS630**
DLHZO-TEZ, DLKZOR-TEZ - direct, zero spool overlap - technical tables **FS610**

4 FUNCTIONAL DESCRIPTION

Valves with option /U are designed to receive separated power supplies for logic VL+ and solenoids SAFE_V+.
When the solenoid power supply SAFE_V+ is removed, the valve's spool is moved by the spring towards the safe rest position and then the valve regulation is consequently inhibited.
The valve's diagnostics and communication remain active thanks to the logic power supply VL+ and then the valve can continuously exchange spool position and status with the machine central unit.
The time required by the valve's spool to reach the safe position is detailed in section 5

Safe power supply - SAFE_V+

The SAFE_V+ feeds only the valve solenoids. It can be removed to cut-off the current to the solenoids in order to inhibit the valve's regulation:

- inhibited regulation: SAFE_V+ = **0 VDC**
- permitted regulation: SAFE_V+ = **24 VDC**

For double solenoids valves the power supply SAFE_V+ feeds both solenoids, then when it is removed the valve regulation is completely inhibited.

Power supply - VL+

The VL + feeds the logic and communication functions. It must always be kept ON = 24VDC to allow the real-time diagnostics of the valve status and spool position.

Fault output signal – FAULT

Fault signal is a diagnostic output which states faults or warning according to the valve status.
This signal must be monitored by the machine central unit to intercept failures which may compromise the valve safety function.
The FAULT signal is switched OFF (0 VDC) when the internal diagnostics detects valve failures or incorrect behaviour (e.g. : spool sticking, solenoid short circuits, missing coils connection, reference signal cable broken for 4 ÷ 20 mA input, etc).
For piloted valves the FAULT signal = 0 VDC indicates also the absence of pilot pressure.

5 SWITCH-OFF TIME

The switch-off time is the time between the power supply SAFE_V+ interruption and the achievement of the spool safety rest position.
It is influenced by the working conditions like flow, pressure and fluid viscosity.

The switch-off times shown in the table are considered in the following conditions:
- max flow and max pressure values as per specific technical table of each valve model
- fluid viscosity 46 mm^2/s
- fluid contamination level: ISO4406 CLASS 18/16/13

The following switch-off times can be considered as the longest ones.

For different working conditions, consult Atos technical office.

Valve model	**DHZO**	**DKZOR**	**DLHZO**	**DLKZOR**	**DPZO-1**	**DPZO-2**	**DPZO-4 DPZO-4M**	**DPZO-6**	**DPZO-8**
Switch-off time [ms]	50	80	40	60	180	250	300	350	400

6 FUNCTIONAL EXAMPLES

The following examples show the condition of a double solenoid valve and of the controlled actuator depending to the SAFE_ENABLE status.

Valve normal operation

Safe Power Supply [VDC]	Power Supply [VDC]
SAFE_V+	**VL+**
24	24

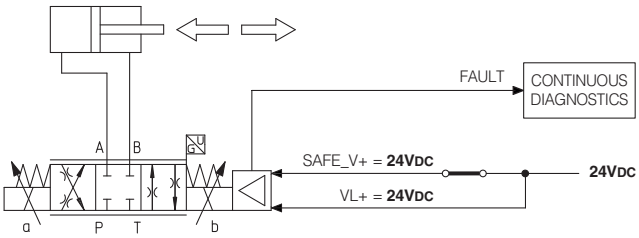

normal operation

Valve safe operation with regulation completely inhibited

Safe Power Supply [VDC]	Power Supply [VDC]
SAFE_V+	**VL+**
0	24

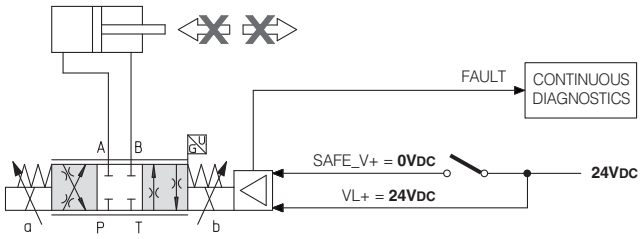

regulation completely inhibited

INHIBITED SPOOL POSITION SAFE_V+ = **0VDC**

PERMITTED SPOOL POSITION SAFE_V+ = **24VDC**

INHIBITED DIRECTION

PERMITTED DIRECTION

7 INHIBITED / PERMITTED SPOOL POSITION

The below tables show the inhibited / permitted spool position depending to the SAFE_V+ status for all models of safety proportional valves.

Note: the inhibition of the actuator direction may be affected by other valves present in the circuit, then the whole hydraulic system where the valve /U is applied must be considered.

7.1 High performance proportionals

INHIBITED SPOOL POSITION

PERMITTED SPOOL POSITION

DHZO-TES, DKZOR-TES - direct operated, positive spool overlap - technical table **FS165**

Safe Power Supply [VDC]	Power Supply [VDC]	Configuration **51, 53** standard	Configuration **51, 53** option /B	Configuration **71, 72, 73** standard	Configuration **71, 72, 73** option /B
SAFE_V+	VL+	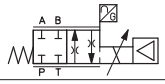	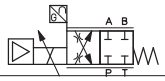	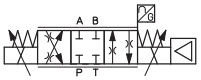	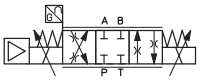
24	24			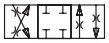	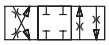
0	24			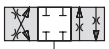	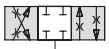
		①	①	①	①

DPZO-TES - pilot operated, positive spool overlap - technical table **FS172**

Safe Power Supply [VDC]	Power Supply [VDC]	Configuration **51, 53** standard	Configuration **51, 53** option /B	Configuration **71, 72, 73** standard	Configuration **71, 72, 73** option /B
SAFE_V+	VL+	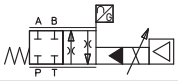	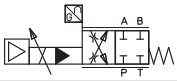	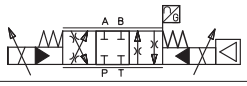	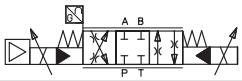
24	24			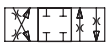	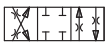
0	24			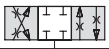	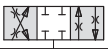
		①	①	①	①

DPZO-LES - pilot operated, positive spool overlap - technical table **FS175**

Safe Power Supply [VDC]	Power Supply [VDC]	Configuration **71, 72, 73** standard	Configuration **71, 72, 73** option /B
SAFE_V+	VL+	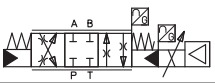	
24	24	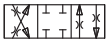	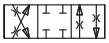
0	24	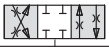	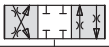
		①	①

① = Spool safety rest position

7.2 Servoproportionals

INHIBITED SPOOL POSITION

PERMITTED SPOOL POSITION

DHZO-TES/TEZ, DKZOR-TES/TEZ - direct operated, zero spool overlap - technical tables **FS168**, **FS620**

Safe Power Supply [VDC]	Power Supply [VDC]	Configuration **70** standard	Configuration **70** option /B
SAFE_V+	VL+	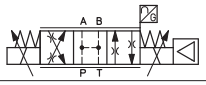	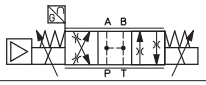
24	24		
0	24		
		②	②

DPZO-LES, DPZO-LEZ - pilot operated, zero spool overlap - technical table **FS178**, **FS630**

Safe Power Supply [VDC]	Power Supply [VDC]	Configuration **60** standard	Configuration **60** option /B	Configuration **70** standard	Configuration **70** option /B
SAFE_V+	VL+	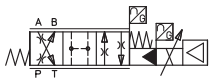	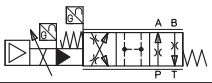	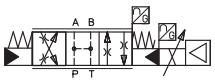	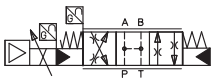
24	24	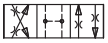	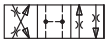		
0	24	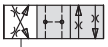			
		①	①	②	②

DLHZO-TES/TEZ, DLKZOR-TES/TEZ - direct operated, zero spool overlap - technical tables **FS180, FS610**

Safe Power Supply [VDC]	Power Supply [VDC]	Configuration **40** with fail safe 1 or 3 standard	Configuration **40** with fail safe 1 or 3 option /B	Configuration **60** without fail safe standard	Configuration **60** without fail safe option /B
SAFE_V+	VL+	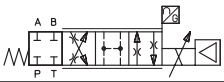	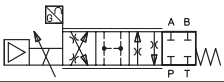	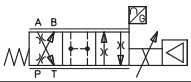	
24	24			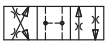	
0	24				
		①	①	①	①

① = Spool safety rest position

② = Spool safety rest position for valves with zero spool overlap, configuration 70 - see 7.3

7.3 Safety rest position - for valves with zero spool overlap, configuration 70

In absence of solenoid power supply (SAFE_V+ = 0), the valve spool is moved by the springs force to the **safety rest position** characterized by a small offset of about 1% to 6% of the total stroke in P-B / A-T configuration.

This is specifically designed to avoid that in case of interruption of solenoid power supply, the actuator moves towards an undefined direction (due to the tolerances of the zero spool overlap), with potential risk of damages or personnel injury.

Thanks to the **safety rest position** the actuator movement is suddenly stopped and it is recovered at very low speed towards the direction corresponding to the P-B/ A-T connection.

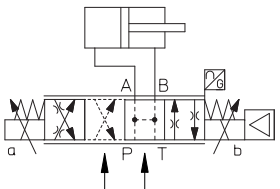

Spool position with solenoid power supply ON and reference signal = 0 (zero overlap position)

Spool offset position 1% to 6% of total stroke with solenoid power supply OFF (central safety rest position)

8 ELECTRONIC CONNECTIONS

8.1 Main connector signals - 12 pin - options /U

PIN	TES LES	TEZ LEZ	TECHNICAL SPECIFICATIONS	NOTES
1	**SAFE_V+**		Safe power supply 24 VDC for solenoid	Input - power supply
2	**SAFE_V0**		Safe power supply 0 VDC for solenoid	Gnd - power supply
3	**ENABLE**		Enable (24 VDC) or disable (0 VDC) the driver, referred to VL0	Input - on/off signal
4	**Q_INPUT+**		Flow (spool position) reference input signal: ±10 VDC / ±20 mA maximum range Defaults are ±10 VDC for standard and 4 ÷ 20 mA for /I option	Input - analog signal **Software selectable**
		P_INPUT+	Position reference input signal: ±10 VDC / ±20 mA maximum range	
5	**INPUT-**		Negative reference input signal for Q_INPUT+, F_INPUT+ and P_INPUT+	Input - analog signal
6	**Q_MONITOR**		Flow (spool position) monitor output signal: ±10 VDC / ±20 mA maximum range, referred to VL0. Defaults are ±10 VDC for standard and 4 ÷ 20 mA for /I option	Output - analog signal **Software selectable**
		P_MONITOR	Position monitor output signal: ±10 VDC / ±20 mA maximum range, referred to VL0	
7	**F_INPUT+**	**(1)**	Pressure/force reference input signal: ±10 VDC / ±20 mA maximum range Defaults are ±10 VDC for standard and 4 ÷ 20 mA for /I option	Input - analog signal **Software selectable**
8	**F_MONITOR**	**(1)**	Pressure/force monitor output signal: ±10 VDC / ±20 mA maximum range, referred to VL0 Defaults are ±10 VDC for standard and 4 ÷ 20 mA for /I option	Output - analog signal **Software selectable**
9	**VL+**		Power supply 24 VDC for driver's logic and communication	Input - power supply
10	**VL0**		Power supply 0 VDC for driver's logic and communication	Gnd - power supply
11	**FAULT**		Fault (0 VDC) or normal working (24 VDC), referred to VL0	Output - on/off signal
PE	**EARTH**		Internally connected to driver housing	

(1) Connection NOT available for **TES/LES** in **SN** execution

9 ELECTRICAL CHARACTERISTICS

SIGNALS	SPECIFICATIONS	NOTES
SAFE_V+ **VL+**	Nominal : +24 VDC Rectified and filtered : VRMS = 20 ÷ 32 VMAX (ripple max 10 % VPP)	Input - power supply
FAULT	ON state depends on input power supply VL+: ON state > VL+ - 2V @ max 50 mA e.g. in case of VL+ = 24V, the ON state > 22V OFF state < 1 V; External negative voltage not allowed (e.g. due to inductive loads)	Output - on/off signal

Note: for the electrical characteristic of all other signals, refer to the technical table of each valve model - see section 3

9.1 Connections layout

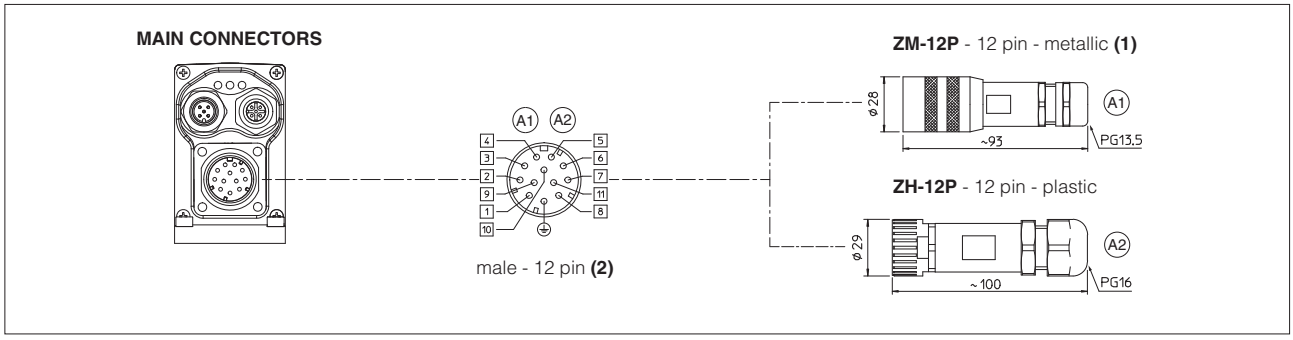

(1) Use of metallic connectors is strongly recommended in order to fulfill EMC requirements
(2) Pin layout always referred to driver's view
For fieldbus and/or transducers connections, refer to specific technical tables of each valve model - see section 3

10 RELATED DOCUMENTATION

General tables:

Y010 Basics for safety components
FS001 Basics for digital electrohydraulics
FS500 Digital proportional valves with p/Q control
FS900 Operating and maintenance information for proportional valves
GS500 Programming tools
GS510 Fieldbus
K800 Electric and electronic connectors
P005 Mounting surfaces for electrohydraulic valves

Valves technical tables:

FS165 DHZO-TES, DKZOR-TES, direct operated
FS172 DPZO-TES, pilot operated
FS175 DPZO-LES, pilot operated
FS168 DHZO-TES, DKZOR-TES, direct operated, zero spool overlap
FS180 DLHZO-TES, DLKZOR-TES, direct operated, sleeve execution
FS178 DPZO-LES, pilot operated, zero spool overlap
FS610 DLHZO-TEZ, DLKZOR-TEZ digital proportional valves with on-board axis card
FS620 DHZO-TEZ, DKZOR-TEZ digital proportional valves with on-board axis card
FS630 DPZO-LEZ digital proportional valves with on-board axis card

Commissioning and troubleshooting tables:

QF300 Quickstart for TES direct operated proportional valves (supplied with the valve)
QF320 Quickstart for TES/LES pilot operated proportional valves (supplied with the valve)

Operating and fieldbus manuals for TES and LES:

E-MAN-RI-LES - TES and LES drivers user manual
E-MAN-RI-LES-S - TES and LES drivers with p/Q control user manual
E-MAN-S-BC - CANopen protocol programming manual
E-MAN-S-BP - PROFIBUS DP protocol programming manual
E-MAN-S-EH - EtherCAT protocol programming manual
E-MAN-S-EW - POWERLINK protocol programming manual
E-MAN-S-EI - EtherNet/IP protocol programming manual
E-MAN-S-EP - PROFINET IRT protocol programming manual

Operating and fieldbus manuals for TEZ and LEZ:

Z-MAN-RI-LEZ - TEZ and LEZ controllers user manual
Z-MAN-RI-LEZ-S - TEZ and LEZ controllers with p/Q control user manual
Z-MAN-S-BC - CANopen protocol programming manual
Z-MAN-S-BP - PROFIBUS DP protocol programming manual
Z-MAN-S-EH - EtherCAT protocol programming manual
Z-MAN-S-EW - POWERLINK protocol programming manual
Z-MAN-S-EI - EtherNet/IP protocol programming manual
Z-MAN-S-EP - PROFINET IRT protocol programming manual

SIL safety manuals for operating, installation and maintenance (on request):

TT366 DHZO-TES/TEZ, DKZOR-TES/TEZ
TT367 DLHZO-TES/TEZ, DLKZOR-TES/TEZ
TT368 DPZO-TES/LES/LEZ

TÜV certificates (on request):

TUV IT 22 SIL 0068 Safety proportional valves, direct operated
TUV IT 22 SIL 0067 Safety proportional valves, piloted operated

Digital proportional relief valves high performance

direct, with on-board pressure transducer

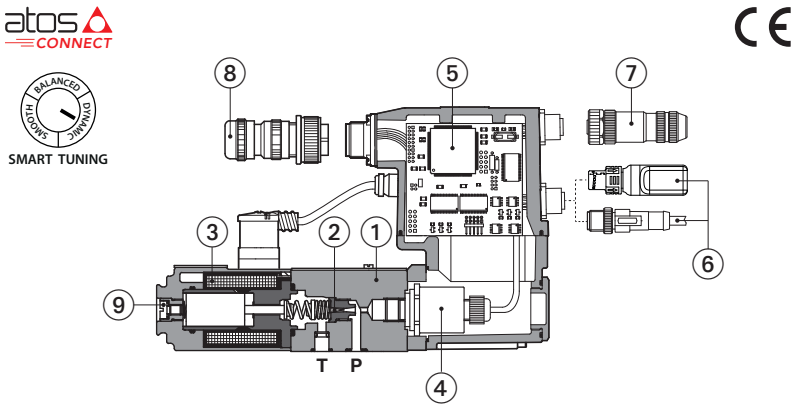

RZMO-RES-P-BC-010

① Valve body
② Poppet
③ Proportional solenoid
④ On-board pressure transducer
⑤ On-board digital driver
⑥ Bluetooth/USB connection
⑦ Fieldbus connector
⑧ Main connector
⑨ Screw for air blending

RZMO-R , RZMO-REB, RZMO-RES

Poppet type direct operated digital proportional relief valves with on-board pressure transducer for pressure closed loop controls.

R to be coupled with off-board driver.

REB basic execution, with on-board digital driver, with analog reference signal or IO-Link interface for digital reference signals, valve settings, and real-time diagnostics.

RES full execution, with on-board digital driver which includes also fieldbus interfaces for digital reference signals, valve settings, and real-time diagnostics.

For **REB** and **RES**, Bluetooth/USB connection is always present for valve settings via mobile App and Atos PC software.

Size: **06** - ISO 4401
Max flow: **4 l/min**
Max pressure: **350 bar**

1 MODEL CODE

RZMO	-	REB	-	P	-	NP	-	010	/	210	/	*	/	*	/	*	/	*

Proportional pressure relief valve, direct

R = off-board driver, see section 3
REB = basic on-board digital driver
RES = full on-board digital driver

P = with on-board pressure transducer

IO-Link interface, only for REB, see section 8 :
NP = Not present **IL** = IO-Link

Fieldbus interfaces, only for RES, see section 9 :
BC = CANopen **EH** = EtherCAT
BP = PROFIBUS DP

Configuration:
010 = regulation on port P, discharge in T (direct operated version)

Max regulated pressure:
100 = 100 bar **315** = 315 bar
210 = 210 bar **350** = 350 bar

Electronic options, only for **REB-NP** and **RES (1)**:
I = current reference input and monitor 4÷20 mA
Q = enable signal
Z = double power supply, enable, fault and monitor signals -12 pin connector

Bluetooth option, only for **REB** and **RES (1)**, see section 6 :
T = Bluetooth adapter supplied with the valve

Series number

Seals material, see section 13 :
- = NBR
PE = FKM
BT = NBR low temp.

(1) Possible combined options: IQ, IZ (/T Bluetooth adapter option can be combined with all other options)

2 HYDRAULIC SYMBOLS

RZMO-R

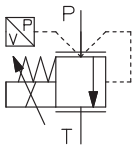

RZMO-REB RZMO-RES

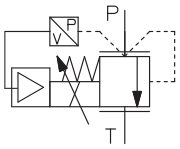

3 OFF-BOARD ELECTRONIC DRIVER - only for **R**

Drivers model	E-BM-RES
Type	Digital
Format	DIN rail panel format
Tech table	GS203

4 GENERAL NOTES

Atos digital proportionals valves are CE marked according to the applicable directives (e.g. Immunity and Emission EMC Directive).
Installation, wirings and start-up procedures must be performed according to the general prescriptions shown in tech table **FS900** and in the user manuals included in the E-SW-SETUP programming software.

5 VALVE SETTINGS AND PROGRAMMING TOOLS - see tech. table **GS500**

5.1 Atos CONNECT mobile App

Free downloadable App for smartphones and tablets which allows quick access to valve main functional parameters and basic diagnostic information via Bluetooth, thus avoiding physical cable connection and significantly reducing commissioning time.
Atos CONNECT supports Atos digital valve drivers equipped with E-A-BTH adapter or with built-in Bluetooth. It does not support valves with p/Q control or axis controls.

Download on the App Store

GET IT ON Google Play

5.2 E-SW-SETUP PC software

Free downloadable software for PC allows to set all valve functional parameters and to access complete diagnostic information of digital valve drivers via Bluetooth/USB service port.
Atos E-SW-SETUP PC software supports all Atos digital valve drivers and it is available at www.atos.com in MyAtos area.

WARNING: drivers USB port is not isolated! For E-C-SB-USB/M12 cable, the use of E-A-SB-USB/OPT isolator adapter is highly recommended for PC protection

Bluetooth or USB connection

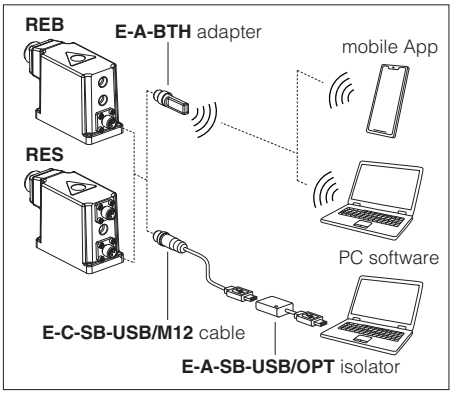

6 BLUETOOTH OPTION - see tech. table **GS500**

T option adds Bluetooth® connectivity to Atos valve drivers thanks to E-A-BTH adapter, which can be left permanently installed on-board, to allow the Bluetooth connection with the valve drivers at any time. E-A-BTH adapter can also be purchased separately and used to connect with any supported Atos digital product.
Bluetooth connection to the valve can be protected against unauthorised access by setting a personal password. The adapter leds visually indicates the status of valve driver and Bluetooth connection.

WARNING: for the list of countries where the Bluetooth adapter has been approved, see tech. table **GS500**
T option is not available for the Indian market, so the Bluetooth adapter must be ordered separately.

7 SMART TUNING

Smart tuning allows to adjust the valve dynamic response in order to match different hydraulic conditions and performance requirements.

The valve is provided with 3 factory settings for the pressure control:

- **dynamic** fast response time for best dynamic performances. Default factory setting for pressure valves
- **balanced** average response time suitable for major applications
- **smooth** attenuated response time for slow regulation without overshoots

Smart tuning setting can be switched from Dynamic (default) to Balanced or Smooth via software or fieldbus; if requested, performances can be further customized directly tuning each single control parameter. For details consult related manuals E-MAN-* and Quickstart, see section 24.

Below indications have to be considered as a general guideline, being affected by hydraulic circuit stiffness, working flow and dead volume.

High stiffness - Low flow - Small volume

1 = dynamic
2 = balanced
3 = smooth

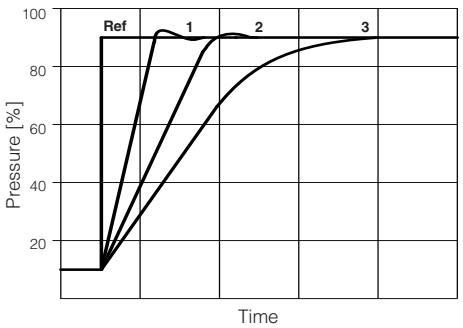

Low stiffness - High flow - Large volume

1 = dynamic
2 = balanced
3 = smooth

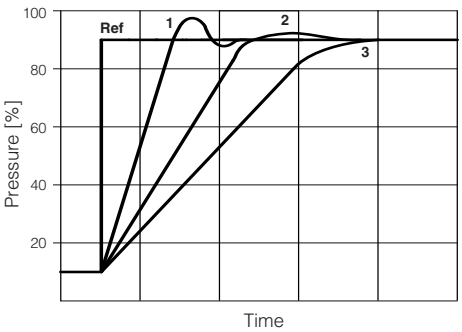

8 IO-LINK - only for **REB**, see tech. table **GS520**

IO-Link allows low cost digital communication between the valve and machine central unit. The valve is directly connected to a port of an IO-Link master (point-to-point connection) via low-cost unshielded cables for digital reference, diagnostic and settings. The IO-Link master works as a hub exchanging this information with the machine central unit via fieldbus.

9 FIELDBUS - only for **RES**, see tech. table **GS510**

Fieldbus allows valve direct communication with machine control unit for digital reference, valve diagnostics and settings. These execution allow to operate the valves through fieldbus or analog signals available on the main connector.

10 GENERAL CHARACTERISTICS

Assembly position	Any position
Subplate surface finishing to ISO 4401	Acceptable roughness index: Ra ≤ 0,8, recommended Ra 0,4 – Flatness ratio 0,01/100
MTTFd valves according to EN ISO 13849	150 years, for further details see technical table P007
Ambient temperature range	**R:** **Standard** = -20°C ÷ +70°C **/PE** option = -20°C ÷ +70°C **/BT** option = -40°C ÷ +60°C **REB, RES:** **Standard** = -20°C ÷ +60°C **/PE** option = -20°C ÷ +60°C **/BT** option = -40°C ÷ +60°C
Storage temperature range	**R:** **Standard** = -20°C ÷ +80°C **/PE** option = -20°C ÷ +80°C **/BT** option = -40°C ÷ +70°C **REB, RES:** **Standard** = -20°C ÷ +70°C **/PE** option = -20°C ÷ +70°C **/BT** option = -40°C ÷ +70°C
Surface protection	Zinc coating with black passivation, galvanic treatment (driver housing for REB and RES)
Corrosion resistance	Salt spray test (EN ISO 9227) > 200 h
Vibration resistance	See technical table G004 (for REB and RES)
Compliance	CE according to EMC directive 2014/30/EU (Immunity: EN 61000-6-2; Emission: EN 61000-6-3) RoHS Directive 2011/65/EU as last update by 2015/863/EU REACH Regulation (EC) n°1907/2006

11 HYDRAULIC CHARACTERISTICS - based on mineral oil ISO VG 46 at 50 °C

Valve model		**RZMO-*-010**
Max regulated pressure	[bar]	100; 210; 315; 350
Max pressure at port P	[bar]	350
Max pressure at port T	[bar]	210
Min regulated pressure	[bar]	see min. pressure / flow diagram at section 14
Max flow	[l/min]	4
Response time 0-100% step signal (depending on installation) **(1)**	[ms]	≤ 55
Hysteresis		≤ 0,3 [% of max pressure]
Linearity		≤ 1,0 [% of max pressure]
Repeatability		≤ 0,2 [% of max pressure]
Thermal drift		zero point displacement < 1% at ΔT = 40°C

Note: above performance data refer to valves coupled with Atos electronic drivers, see section 3

(1) Average response time value; the pressure variation in consequence of a modification of the reference input signal to the valve is affected by the stiffness of the hydraulic circuit: greater is the stiffness of the circuit, faster is the dynamic response, see section 7

12 ELECTRICAL CHARACTERISTICS

Power supplies	Nominal : +24 VDC Rectified and filtered : VRMS = 20 ÷ 32 VMAX (ripple max 10 % VPP)				
Max power consumption	**R** = 30 W **REB**, **RES** = 50 W				
Max. solenoid current	3 A				
Coil resistance R at 20°C	3 ÷ 3,3 Ω				
Analog input signals	Voltage: range ±10 VDC (24 VMAX tolerant) Input impedance: Ri > 50 kΩ Current: range ±20 mA Input impedance: Ri = 500 Ω				
Monitor output	Voltage: maximum range 0 ÷ 10 VDC @ max 5 mA Current: maximum range 0 ÷ 20 mA @ max 500 Ω load resistance				
Enable input	Range: 0 ÷ 9 VDC (OFF state), 15 ÷ 24 VDC (ON state), 9 ÷ 15 VDC (not accepted); Input impedance: Ri > 87 kΩ				
Fault output	Output range : 0 ÷ 24 VDC (ON state ≅ VL+ [logic power supply] ; OFF state ≅ 0 V) @ max 50 mA; external negative voltage not allowed (e.g. due to inductive loads)				
Pressure transducer **(1)**	E-ATR-8/*/I Output signal: 4 ÷ 20 mA (see tech table **GS465**)				
Alarms	Solenoid not connected/short circuit, cable break with current reference signal, over/under temperature, current control monitoring, power supplies level, pressure transducer failure				
Insulation class	H (180°) Due to the occurring surface temperatures of the solenoid coils, the European standards ISO 13732-1 and EN982 must be taken into account				
Protection degree to DIN EN60529	**R** = IP65; **REB**, **RES** = IP66 / IP67 with mating connectors				
Duty factor	Continuous rating (ED=100%)				
Tropicalization	Tropical coating on electronics PCB				
Additional characteristics	Short circuit protection of solenoid's current supply; current control by P.I.D. with rapid solenoid switching; protection against reverse polarity of power supply				
Communication interface	USB Atos ASCII coding	IO-Link Interface and System Specification 1.1.3	CANopen EN50325-4 + DS408	PROFIBUS DP EN50170-2/IEC61158	EtherCAT IEC 61158
Communication physical layer	not insulated USB 2.0+USB OTG	SDCI class port B	optical insulated CAN ISO11898	optical insulated RS485	Fast Ethernet, insulated 100 Base TX
Recommended wiring cable	LiYCY shielded cables, see section 21				

(1) In case of pressure transducer failure, the valve's reaction can be configured through Atos E-SW-SETUP software to:
- cut off the current to solenoid, therefore the regulated pressure will be reduced to minimum value (default setting)
- automatically switch the pressure control from closed loop (dynamic, balanced, smooth) to open loop, to let the valve to temporarily operate with reduced regulation accuracy

Note: a maximum time of 500 ms (depending on communication type) has to be considered between the driver energizing with the 24 VDC power supply and when the valve is ready to operate. During this time the current to the valve coils is switched to zero.

13 SEALS AND HYDRAULIC FLUIDS - for other fluids not included in below table, consult our technical office

Seals, recommended fluid temperature	NBR seals (standard) = -20°C ÷ +60°C (+80°C for **R**), with HFC hydraulic fluids = -20°C ÷ +50°C FKM seals (/PE option) = -20°C ÷ +80°C NBR low temp. seals (/BT option) = -40°C ÷ +60°C, with HFC hydraulic fluids = -20°C ÷ +50°C		
Recommended viscosity	20 ÷ 100 mm²/s - max allowed range 15 ÷ 380 mm²/s		
Max fluid contamination level — normal operation	ISO4406 class 18/16/13 NAS1638 class 7		see also filter section at www.atos.com or KTF catalog
Max fluid contamination level — longer life	ISO4406 class 16/14/11 NAS1638 class 5		
Hydraulic fluid	**Suitable seals type**	**Classification**	**Ref. Standard**
Mineral oils	NBR, FKM, NBR low temp.	HL, HLP, HLPD, HVLP, HVLPD	DIN 51524
Flame resistant without water	FKM	HFDU, HFDR	ISO 12922
Flame resistant with water	NBR, NBR low temp.	HFC	

14 DIAGRAMS (based on mineral oil ISO VG 46 at 50 °C)

1 Regulation diagrams
with flow rate Q = 1 l/min

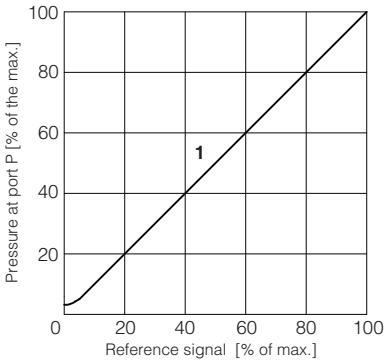

2 Pressure/flow diagrams
with reference signal set at Q = 1 l/min

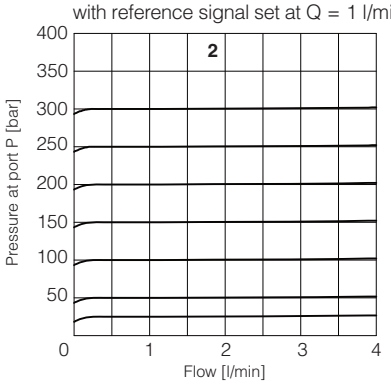

3-6 Min. pressure/flow diagrams
with zero reference signal

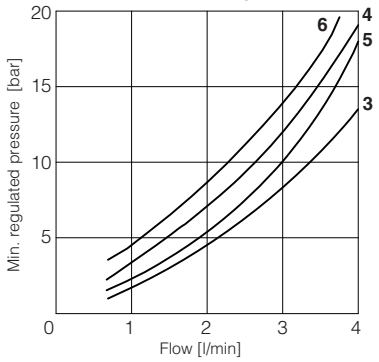

3 = RZMO/100 **4 =** RZMO/210
5 = RZMO/315 **6 =** RZMO/350

15 ELECTRONIC OPTIONS - only for **REB-NP** and **RES**

I = This option provides 4 ÷ 20 mA current reference and monitor signals, instead of the standard 0 ÷ 10 VDC.
Input signal can be reconfigured via software selecting between voltage and current, within a maximum range of ±10 VDC or ±20 mA.
It is normally used in case of long distance between the machine control unit and the valve or where the reference signal can be affected by electrical noise; the valve functioning is disabled in case of reference signal cable breakage.

Q = This option permits to inhibit the valve function without removing the power supply to the driver. Upon disable command the current to the solenoid is zeroed and the valve's spool moves to rest position.
The option /Q is suggested for all cases where the valve has to be frequently inhibited during the machine cycle – see 18.5 for signal specifications.

Z = This option provides, on the 12 pin main connector, the following additional features:
Fault output signal - see 18.6
Enable input signal - see above option /Q
Power supply for driver's logics and communication - see 18.2

16 POSSIBLE COMBINED OPTIONS

Electronic options: /IQ, /IZ

Note: **/T** Bluetooth adapter option can be combined with all other options

17 AIR BLEEDING

At the first valve commissioning the air eventually trapped inside the solenoid must be bled-off through the screw ① located at the rear side of the solenoid housing.
The presence of air may cause pressure instability and vibrations.

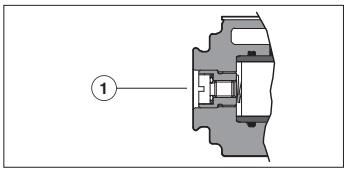

18 POWER SUPPLY AND SIGNALS SPECIFICATIONS - only for **REB-NP** and **RES**

Generic electrical output signals of the valve (e.g. fault or monitor signals) must not be directly used to activate safety functions, like to switch-ON/OFF the machine's safety components, as prescribed by the European standards (Safety requirements of fluid technology systems and components-hydraulics, ISO 4413).

For **REB-IL** signals see section 19

18.1 Power supply (V+ and V0)

The power supply must be appropriately stabilized or rectified and filtered: apply at least a 10000 μF/40 V capacitance to single phase rectifiers or a 4700 μF/40 V capacitance to three phase rectifiers. In case of separate power supply see 18.2.

⚠ A safety fuse is required in series to each power supply: 2,5 A time lag fuse.

18.2 Power supply for driver's logic and communication (VL+ and VL0) - only for **/Z** option

The power supply for driver's logic and communication must be appropriately stabilized or rectified and filtered: apply at least a 10000 μF/40 V capacitance to single phase rectifiers or a 4700 μF/40 V capacitance to three phase rectifiers.
The separate power supply for driver's logic on pin 9 and 10, allow to remove solenoid power supply from pin 1 and 2 maintaining active the diagnostics, USB and fieldbus communications.

⚠ A safety fuse is required in series to each driver's logic and communication power supply: 500 mA fast fuse.

18.3 Pressure reference input signal (P_INPUT+)

The driver controls in closed loop the current to the valve pressure proportionally to the external reference input signal.
Reference input signal is factory preset according to selected valve code, defaults are 0 ÷ 10 VDC for standard and 4 ÷ 20 mA for /I option.
Input signal can be reconfigured via software selecting between voltage and current, within a maximum range of ±10 VDC or ± 20 mA.
Drivers with fieldbus interface (BC, BP, EH) can be software set to receive reference signal directly by the machine control unit (fieldbus reference).
Analog reference input signal can be used as on-off commands with input range 0 ÷ 24 VDC.

18.4 Pressure monitor output signal (P_MONITOR)

The driver generates an analog output signal proportional to the actual pressure of the valve; the monitor output signal can be software set to show other signals available in the driver (e.g. analog reference, fieldbus reference).
Monitor output signal is factory preset according to selected valve code, defaults settings are 0 ÷10 VDC for standard and 4 ÷ 20 mA for /I option.
Output signal can be reconfigured via software selecting between voltage and current, within a maximum range of 0 ÷10 VDC or 0 ÷ 20 mA.

18.5 Enable input signal (ENABLE) - not for standard

To enable the driver, supply a 24 VDC on pin 3 (pin C): Enable input signal allows to enable/disable the current supply to the solenoid, without removing the electrical power supply to the driver; it is used to active the communication and the other driver functions when the valve must be disabled for safety reasons. This condition **does not comply** with norms IEC 61508 and ISO 13849.
Enable input signal can be used as generic digital input by software selection.

18.6 Fault output signal (FAULT) - only for **/Z** option

Fault output signal indicates fault conditions of the driver (solenoid short circuits/not connected, reference signal broken for 4 ÷ 20 mA input, etc.).
Fault presence corresponds to 0 VDC, normal working corresponds to 24 VDC. Fault status is not affected by the Enable input signal.

19 IO-LINK SIGNALS SPECIFICATIONS - only for **REB-IL**

19.1 Power supply for IO-Link communication (L+ and L-)

The IO-Link master provides dedicated 24 VDC power supply for IO-Link communication.
Maximum power consumption: 2 W
Internal electrical isolation of power L+, L- from P24, N24

19.2 Power supply for driver's logic and valve regulation (P24 and N24)

The IO-Link master provides dedicated 24 VDC power supply for valve regulation, logics and diagnostics.
Maximum power consumption: 50 W
Internal electrical isolation of power P24, N24 from L+, L-

19.3 IO-Link data line (C/Q)

C/Q signal is used to establish communication between IO-Link master and valve.

20 ELECTRONIC CONNECTIONS

20.1 Main connector signals - 7 pin (A1) Standard and /Q option - for REB-NP and RES

PIN	Standard	/Q	TECHNICAL SPECIFICATIONS	NOTES
A	**V+**		Power supply 24 VDC	Input - power supply
B	**V0**		Power supply 0 VDC	Gnd - power supply
C	**AGND**		Analog ground	Gnd - analog signal
		ENABLE	Enable (24 VDC) or disable (0 VDC) the driver, referred to V0	Input - on/off signal
D	**P_INPUT+**		Pressure reference input signal: ±10 VDC / ±20 mA maximum range Defaults are 0 ÷ 10 VDC for standard and 4 ÷ 20 mA for /I option	Input - analog signal **Software selectable**
E	**INPUT-**		Negative reference input signal for P_INPUT+	Input - analog signal
F	**P_MONITOR** referred to: AGND | V0		Pressure monitor output signal: 0 ÷ 10 VDC / 0 ÷ 20 mA maximum range Defaults are 0 ÷ 10 VDC for standard and 4 ÷ 20 mA for /I option	Output - analog signal **Software selectable**
G	**EARTH**		Internally connected to driver housing	

20.2 Main connector signals - 12 pin (A2) /Z option - for REB-NP and RES

PIN	/Z	TECHNICAL SPECIFICATIONS	NOTES
1	**V+**	Power supply 24 VDC	Input - power supply
2	**V0**	Power supply 0 VDC	Gnd - power supply
3	**ENABLE**	Enable (24 VDC) or disable (0 VDC) the driver, referred to VL0	Input - on/off signal
4	**P_INPUT+**	Pressure reference input signal: ±10 VDC / ±20 mA maximum range Defaults are 0 ÷ 10 VDC for standard and 4 ÷ 20 mA for /I option	Input - analog signal **Software selectable**
5	**INPUT-**	Negative reference input signal for INPUT+	Input - analog signal
6	**P_MONITOR**	Pressure monitor output signal: 0 ÷ 10 VDC / 0 ÷ 20 mA maximum range, referred to VL0 Defaults are 0 ÷ 10 VDC for standard and 4 ÷ 20 mA for /I option	Output - analog signal **Software selectable**
7	**NC**	Do not connect	
8	**NC**	Do not connect	
9	**VL+**	Power supply 24 VDC for driver's logic and communication	Input - power supply
10	**VL0**	Power supply 0 VDC for driver's logic and communication	Gnd - power supply
11	**FAULT**	Fault (0 VDC) or normal working (24 VDC), referred to VL0	Output - on/off signal
PE	**EARTH**	Internally connected to driver housing	

Note: do not disconnect VL0 before VL+ when the driver is connected to PC USB port

20.3 IO-Link connector signals - M12 - 5 pin - Coding A, port class B (A) only for REB-IL

PIN	SIGNAL	TECHNICAL SPECIFICATIONS	NOTES
1	**L+**	Power supply 24 VDC for IO-Link communication	Input - power supply
2	**P24**	Power supply 24 VDC for valve regulation, logics and diagnostics	Input - power supply
3	**L-**	Power supply 0 VDC for IO-Link communication	Gnd - power supply
4	**C/Q**	IO-Link data line	Input / Output - signal
5	**N24**	Power supply 0 VDC for valve regulation, logics and diagnostics	Gnd - power supply

Note: L+, L- and P24, N24 are electrically isolated

20.4 Communication connectors - for REB (B) and RES (B) - (C)

(B) **USB connector - M12 - 5 pin** always present

PIN	SIGNAL	TECHNICAL SPECIFICATION (1)
1	**+5V_USB**	Power supply
2	**ID**	Identification
3	**GND_USB**	Signal zero data line
4	**D-**	Data line -
5	**D+**	Data line +

(C1) **BC fieldbus execution, connector - M12 - 5 pin (2)**

PIN	SIGNAL	TECHNICAL SPECIFICATION (1)
1	**CAN_SHLD**	Shield
2	**NC**	do not connect
3	**CAN_GND**	Signal zero data line
4	**CAN_H**	Bus line (high)
5	**CAN_L**	Bus line (low)

(C2) **BP fieldbus execution, connector - M12 - 5 pin (2)**

PIN	SIGNAL	TECHNICAL SPECIFICATION (1)
1	**+5V**	Termination supply signal
2	**LINE-A**	Bus line (high)
3	**DGND**	Data line and termination signal zero
4	**LINE-B**	Bus line (low)
5	**SHIELD**	

(C3) (C4) **EH fieldbus execution, connector - M12 - 4 pin (2)**

PIN	SIGNAL	TECHNICAL SPECIFICATION (1)
1	**TX+**	Transmitter
2	**RX+**	Receiver
3	**TX-**	Transmitter
4	**RX-**	Receiver
Housing	**SHIELD**	

(1) Shield connection on connector's housing is recommended

(2) Only for **RES** execution

20.5 Solenoid connection - only for R

PIN	SIGNAL	TECHNICAL SPECIFICATION	Connector code 666
1	**COIL**	Power supply	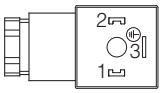
2	**COIL**	Power supply	
3	**GND**	Ground	

20.6 Pressure transducer connection - only for R

PIN	SIGNAL	TECHNICAL SPECIFICATION	Connector code ZBE-08
1	**V+**	Power supply	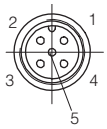
2	**NC**	Not connected	
3	**TR**	Output signal 4 ÷ 20 mA	
4	**NC**	Not connected	
5	**NC**	Not connected	

20.7 REB-NP connections layout

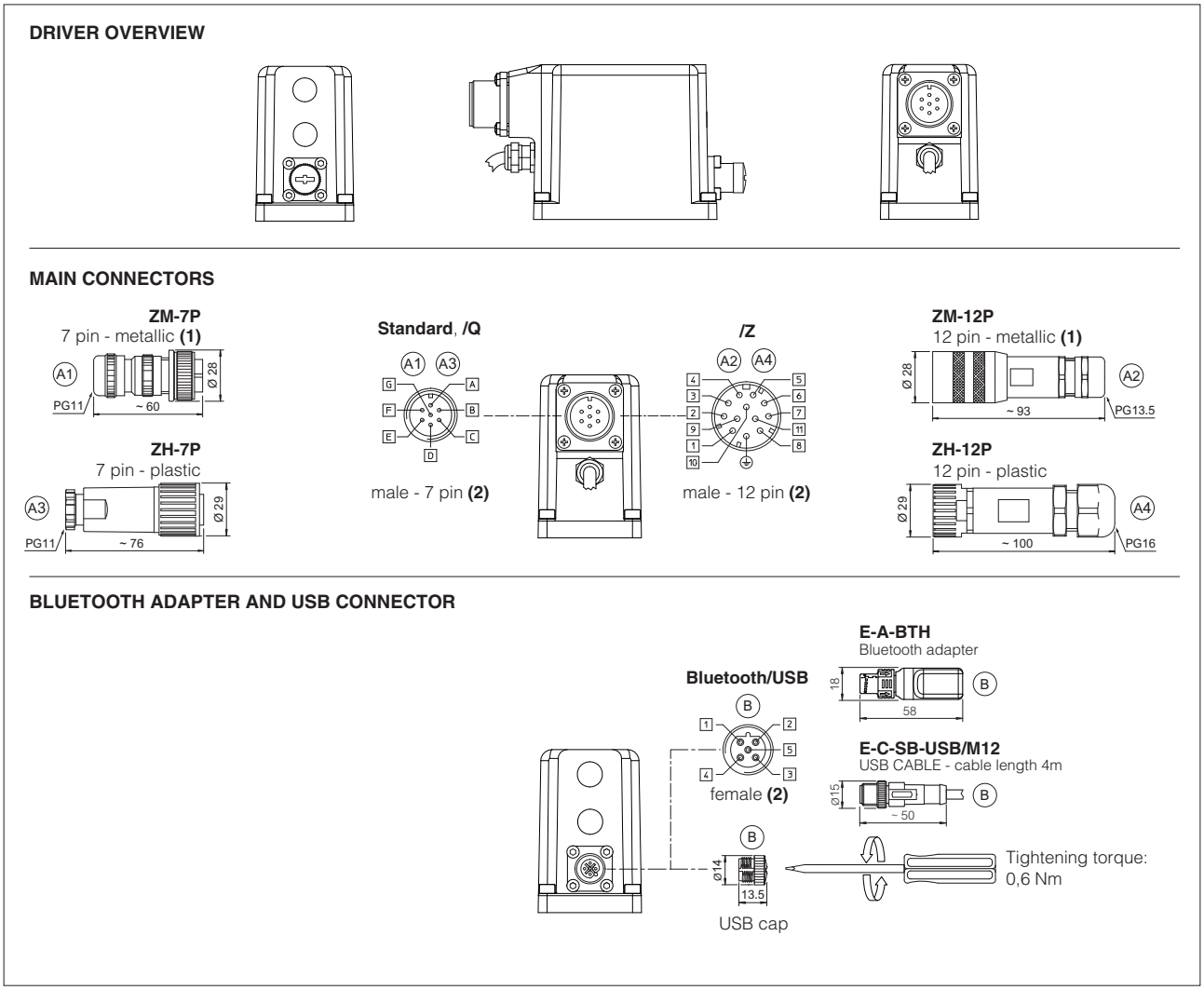

(1) Use of metallic connectors is strongly recommended in order to fulfill EMC requirements **(2)** Pin layout always referred to driver's view

20.8 REB-IL connections layout

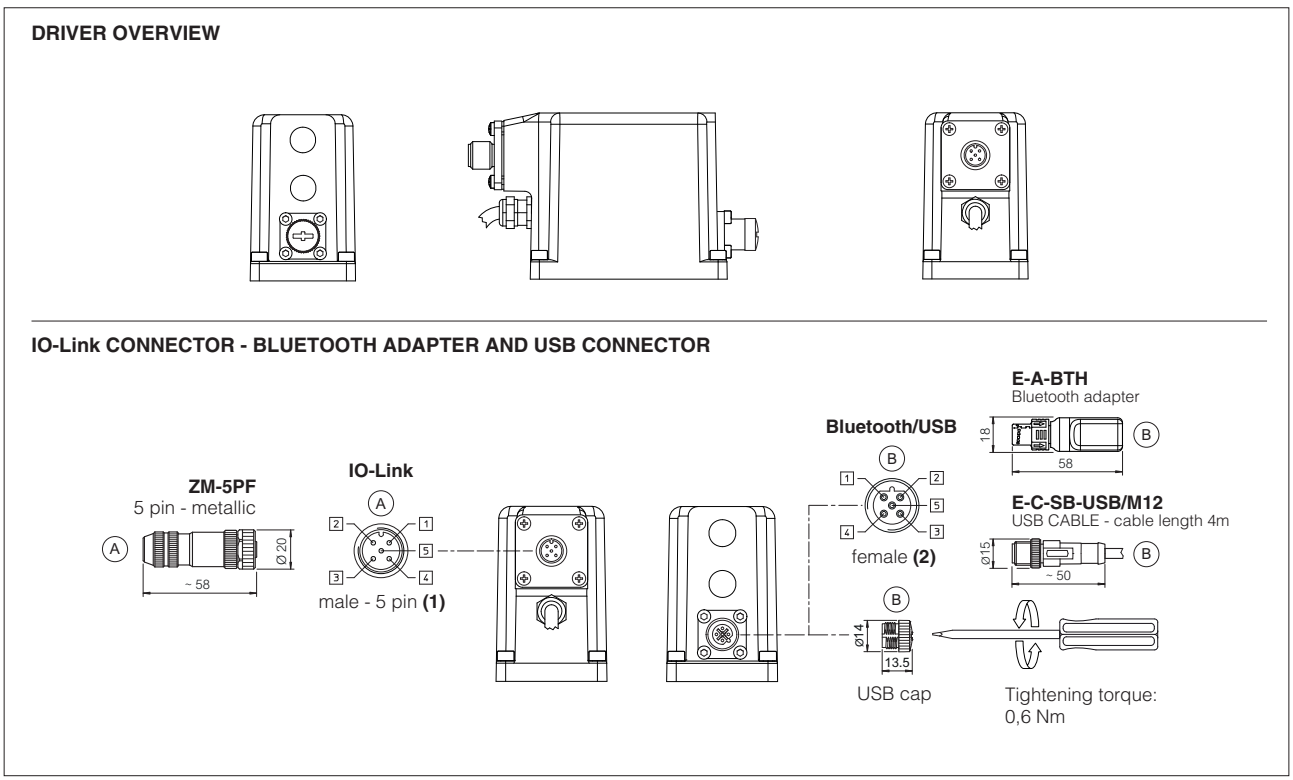

(1) Use of metallic connectors is strongly recommended in order to fulfill EMC requirements **(2)** Pin layout always referred to driver's view

20.9 RES connections layout

DRIVER OVERVIEW

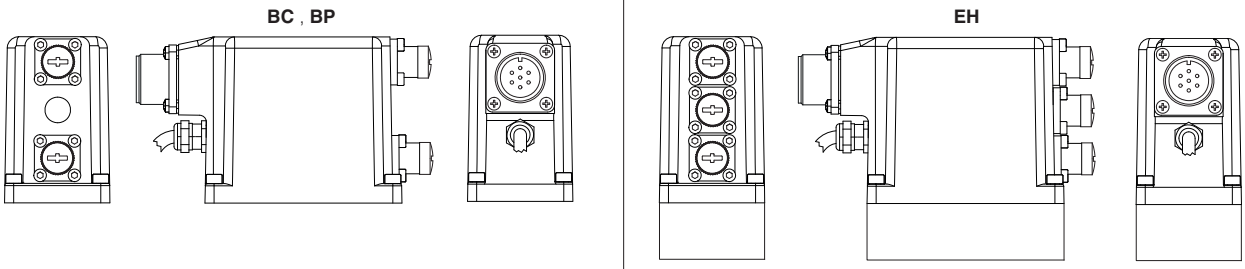

MAIN CONNECTORS

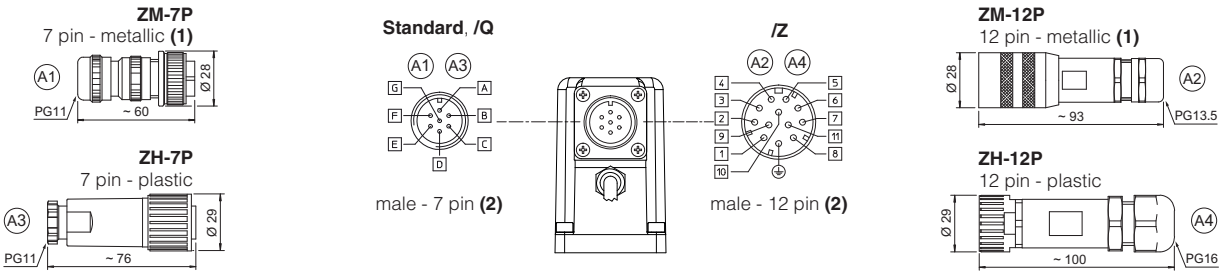

FIELDBUS CONNECTORS

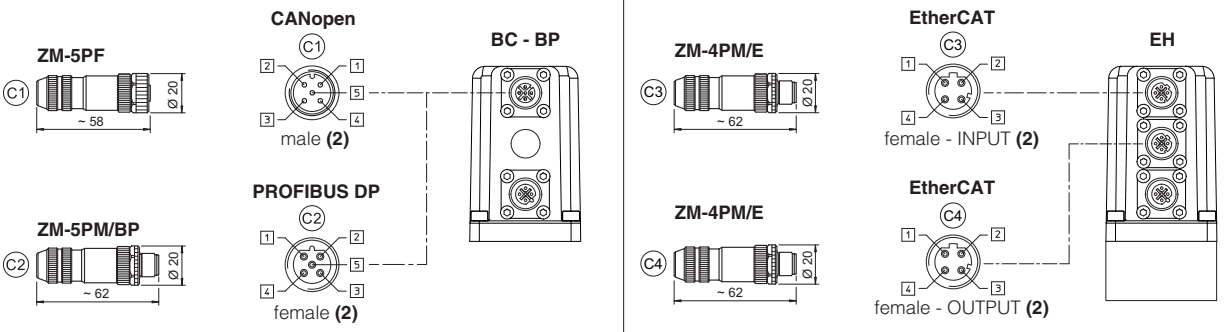

BLUETOOTH ADAPTER AND USB CONNECTOR

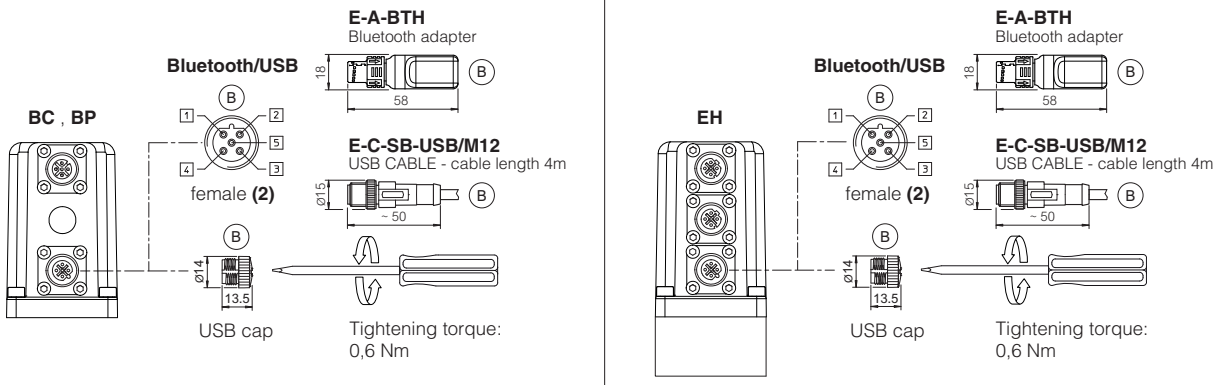

(1) Use of metallic connectors is strongly recommended in order to fulfill EMC requirements **(2)** Pin layout always referred to driver's view

21 CONNECTORS CHARACTERISTICS - to be ordered separately

21.1 Main connectors - 7 pin - for REB-NP and RES

CONNECTOR TYPE	POWER SUPPLY AND SIGNALS	POWER SUPPLY AND SIGNALS
CODE	(A1) ZM-7P	(A3) ZH-7P
Type	7pin female straight circular	7pin female straight circular
Standard	According to MIL-C-5015	According to MIL-C-5015
Material	Metallic	Plastic reinforced with fiber glass
Cable gland	PG11	PG11
Recommended cable	LiYCY 7 x 0,75 mm^2 max 20 m (logic and power supply) or LiYCY 7 x 1 mm^2 max 40 m (logic and power supply)	LiYCY 7 x 0,75 mm^2 max 20 m (logic and power supply) or LiYCY 7 x 1 mm^2 max 40 m (logic and power supply)
Conductor size	up to 1 mm^2 - available for 7 wires	up to 1 mm^2 - available for 7 wires
Connection type	to solder	to solder
Protection (EN 60529)	IP 67	IP 67

21.2 Main connectors - 12 pin - for REB-NP and RES

CONNECTOR TYPE	POWER SUPPLY AND SIGNALS	POWER SUPPLY AND SIGNALS
CODE	(A2) ZM-12P	(A4) ZH-12P
Type	12pin female straight circular	12pin female straight circular
Standard	DIN 43651	DIN 43651
Material	Metallic	Plastic reinforced with fiber glass
Cable gland	PG13,5	PG16
Recommended cable	LiYCY 12 x 0,75 mm^2 max 20 m (logic and power supply)	LiYCY 10 x 0,14mm^2 max 40 m (logic) LiYY 3 x 1mm^2 max 40 m (power supply)
Conductor size	0,5 mm^2 to 1,5 mm^2 - available for 12 wires	0,14 mm^2 to 0,5 mm^2 - available for 9 wires 0,5 mm^2 to 1,5 mm^2 - available for 3 wires
Connection type	to crimp	to crimp
Protection (EN 60529)	IP 67	IP 67

21.3 IO-Link connector - only for REB-IL

CONNECTOR TYPE	IL IO-Link
CODE	(A) ZM-5PF
Type	5pin female straight circular
Standard	M12 coding A – IEC 61076-2-101
Material	Metallic
Cable gland	Pressure nut - cable diameter 6÷8 mm
Recommended cable	5 x 0,75 mm^2 max 20 m
Connection type	screw terminal
Protection (EN 60529)	IP 67

21.4 Fieldbus communication connectors - only for RES

CONNECTOR TYPE	BC CANopen (1)		BP PROFIBUS DP (1)		EH EtherCAT (2)
CODE	(C1) ZM-5PF	(C2) ZM-5PM	(C1) ZM-5PF/BP	(C2) ZM-5PM/BP	(C1) (C2) ZM-4PM/E
Type	5 pin female straight circular	5 pin male straight circular	5 pin female straight circular	5 pin male straight circular	4 pin male straight circular
Standard	M12 coding A – IEC 61076-2-101		M12 coding B – IEC 61076-2-101		M12 coding D – IEC 61076-2-101
Material	Metallic		Metallic		Metallic
Cable gland	Pressure nut - cable diameter 6÷8 mm		Pressure nut - cable diameter 6÷8 mm		Pressure nut - cable diameter 4÷8 mm
Cable	CANbus Standard (DR 303-1)		PROFIBUS DP Standard		Ethernet standard CAT-5
Connection type	screw terminal		screw terminal		terminal block
Protection (EN 60529)	IP67		IP 67		IP 67

(1) E-TRM-** terminators can be ordered separately - see tech table **GS500**

(2) Internally terminated

22 FASTENING BOLTS AND SEALS

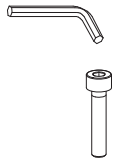	**Fastening bolts:** 4 socket head screws M5x50 class 12.9 Tightening torque = 8 Nm
	Seals: 2 OR 108 Diameter of ports P, T: Ø 5 mm

23 INSTALLATION DIMENSIONS [mm]

ISO 4401: 2005
Mounting surface: 4401-03-02-0-05 (see table P005)
(without ports A and B)

Mass [kg]		
R	**REB, RES**	**RES-EH**
2,1	2,6	2,7

RZMO-R-P

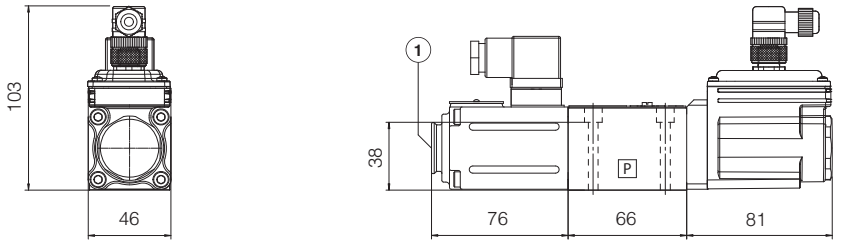

RZMO-REB-P-NP
RZMO-REB-P-IL

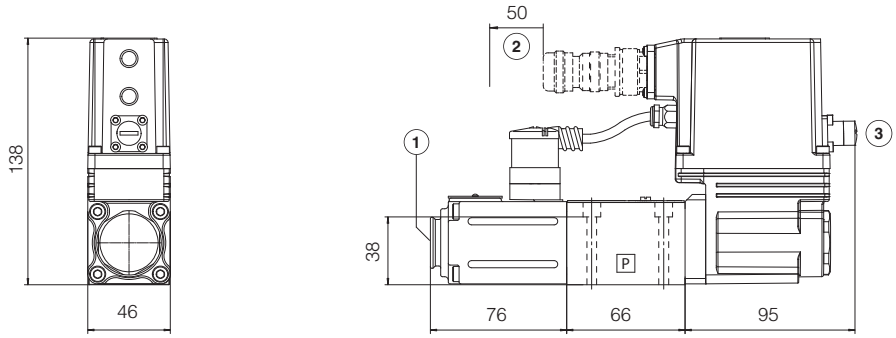

RZMO-RES-P-BP
RZMO-RES-P-BC

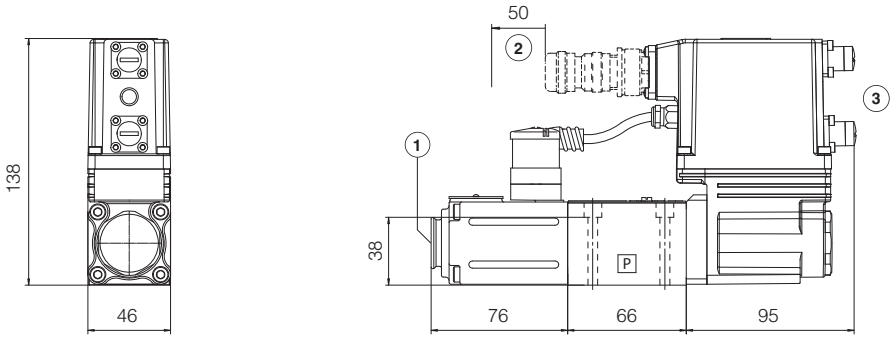

RZMO-RES-P-EH

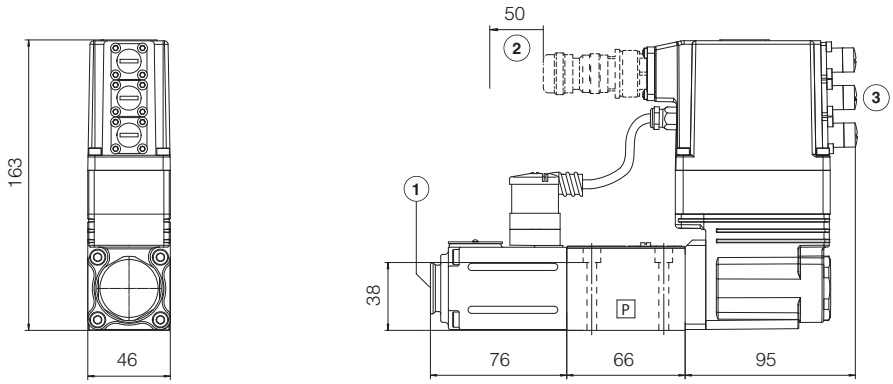

(1) = Air bleeding, see section 17

(2) = Space required for connection cable and for connector removal

(3) = The dimensions of connectors and Bluetooth adapter must be considered, see section 20.7, 20.8 and 20.9

24 RELATED DOCUMENTATION

FS001	Basics for digital electrohydraulics
FS900	Operating and maintenance information for proportional valves
GS203	E-BM-RES digital driver
GS500	Programming tools
GS510	Fieldbus
GS520	IO-Link interface
K800	Electric and electronic connectors
P005	Mounting surfaces for electrohydraulic valves
QB400	Quickstart for REB valves commissioning
QF400	Quickstart for RES valves commissioning
E-MAN-BM-RES	E-BM-RES user manual (off-board)
E-MAN-RI-REB	REB user manual
E-MAN-RI-RES	RES user manual

Digital proportional relief valves high performance

piloted, with on-board pressure transducer

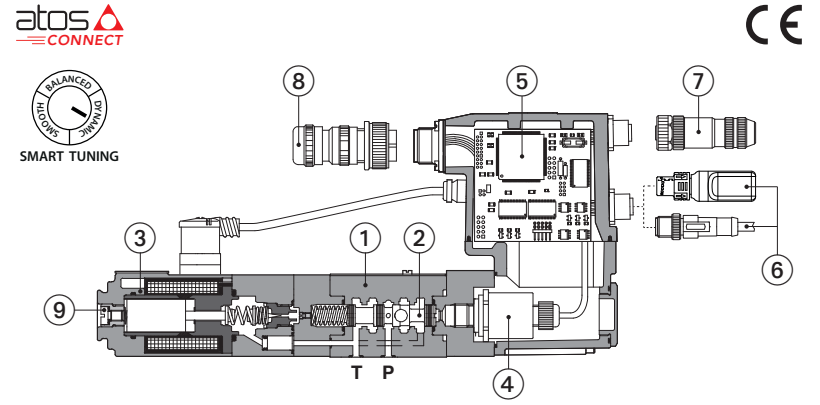

RZMO-RES-P-BC-030

① Valve body
② Poppet
③ Proportional solenoid
④ On-board pressure transducer
⑤ On-board digital driver
⑥ Bluetooth/USB connection
⑦ Fieldbus connector
⑧ Main connector
⑨ Screw for air blending

RZMO-R , RZMO-REB, RZMO-RES

Spool type piloted digital proportional relief valves with on-board pressure transducer for pressure closed loop controls.

R to be coupled with off-board driver.

REB basic execution, with on-board digital driver, with analog reference signal or IO-Link interface for digital reference signals, valve settings, and real-time diagnostics.

RES full execution, with on-board digital driver which includes also fieldbus interfaces for digital reference signals, valve settings, and real-time diagnostics.

For **REB** and **RES**, Bluetooth/USB connection is always present for valve settings via mobile App and Atos PC software.

Size: **06** - ISO 4401
Max flow: **40 l/min**
Max pressure: **350 bar**

1 MODEL CODE

RZMO	-	REB	-	P	-	NP	-	030	/	210	/	*	/	*	*	/	*

Proportional pressure relief valve, piloted

R = off-board driver, see section 3
REB = basic on-board digital driver
RES = full on-board digital driver

P = with on-board pressure transducer

IO-Link interface, only for REB, see section 8 :
NP = Not present **IL** = IO-Link

Fieldbus interfaces, only for RES, see section 9 :
BC = CANopen **EH** = EtherCAT
BP = PROFIBUS DP

Configuration:
030 = regulation on port P, discharge in T (pilot operated version)

Max regulated pressure:
100 = 100 bar **315** = 315 bar
210 = 210 bar **350** = 350 bar

Electronic options, only for **REB-NP** and **RES (1)**:
I = current reference input and monitor 4÷20 mA
Q = enable signal
Z = double power supply, enable, fault and monitor signals -12 pin connector

Bluetooth option, only for **REB** and **RES (1)**, see section 6 :
T = Bluetooth adapter supplied with the valve

Series number

Seals material, see section 13 :
- = NBR
PE = FKM
BT = NBR low temp.

(1) Possible combined options: IQ, IZ (/T Bluetooth adapter option can be combined with all other options)

2 HYDRAULIC SYMBOLS

RZMO-R

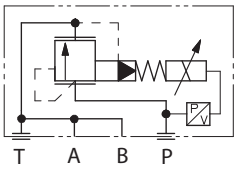

RZMO-REB RZMO-RES

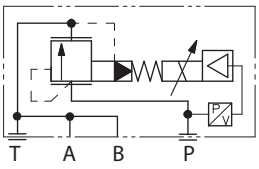

3 OFF-BOARD ELECTRONIC DRIVER - only for **R**

Drivers model	E-BM-RES
Type	Digital
Format	DIN rail panel format
Tech table	GS203

4 GENERAL NOTES

Atos digital proportionals valves are CE marked according to the applicable directives (e.g. Immunity and Emission EMC Directive).
Installation, wirings and start-up procedures must be performed according to the general prescriptions shown in tech table **FS900** and in the user manuals included in the E-SW-SETUP programming software.

5 VALVE SETTINGS AND PROGRAMMING TOOLS - see tech. table **GS500**

5.1 Atos CONNECT mobile App

Free downloadable App for smartphones and tablets which allows quick access to valve main functional parameters and basic diagnostic information via Bluetooth, thus avoiding physical cable connection and significantly reducing commissioning time.
Atos CONNECT supports Atos digital valve drivers equipped with E-A-BTH adapter or with built-in Bluetooth. It does not support valves with p/Q control or axis controls.

Download on the App Store

GET IT ON Google Play

5.2 E-SW-SETUP PC software

Free downloadable software for PC allows to set all valve functional parameters and to access complete diagnostic information of digital valve drivers via Bluetooth/USB service port.
Atos E-SW-SETUP PC software supports all Atos digital valve drivers and it is available at www.atos.com in MyAtos area.

WARNING: drivers USB port is not isolated! For E-C-SB-USB/M12 cable, the use of E-A-SB-USB/OPT isolator adapter is highly recommended for PC protection

Bluetooth or USB connection

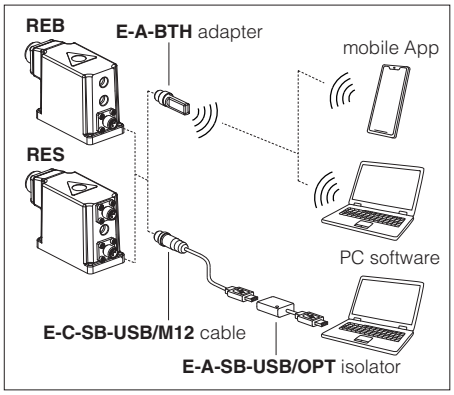

6 BLUETOOTH OPTION - see tech. table **GS500**

T option adds Bluetooth® connectivity to Atos valve drivers thanks to E-A-BTH adapter, which can be left permanently installed on-board, to allow the Bluetooth connection with the valve drivers at any time. E-A-BTH adapter can also be purchased separately and used to connect with any supported Atos digital product.
Bluetooth connection to the valve can be protected against unauthorised access by setting a personal password. The adapter leds visually indicates the status of valve driver and Bluetooth connection.

WARNING: for the list of countries where the Bluetooth adapter has been approved, see tech. table **GS500**
T option is not available for the Indian market, so the Bluetooth adapter must be ordered separately.

7 SMART TUNING

Smart tuning allows to adjust the valve dynamic response in order to match different hydraulic conditions and performance requirements.

The valve is provided with 3 factory settings for the pressure control:
- **dynamic** fast response time for best dynamic performances. Default factory setting for pressure valves
- **balanced** average response time suitable for major applications
- **smooth** attenuated response time for slow regulation without overshoots

Smart tuning setting can be switched from Dynamic (default) to Balanced or Smooth via software or fieldbus; if requested, performances can be further customized directly tuning each single control parameter. For details consult related manuals E-MAN-* and Quickstart, see section 24.

Below indications have to be considered as a general guideline, being affected by hydraulic circuit stiffness, working flow and dead volume.

High stiffness - Low flow - Small volume

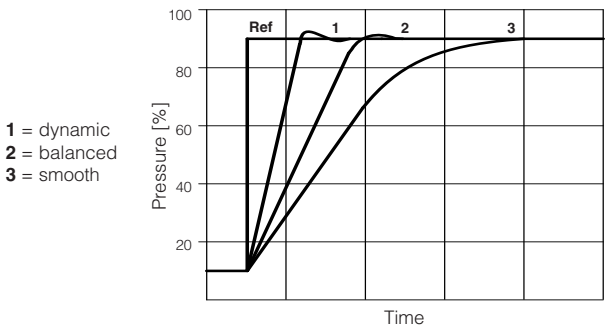

Low stiffness - High flow - Large volume

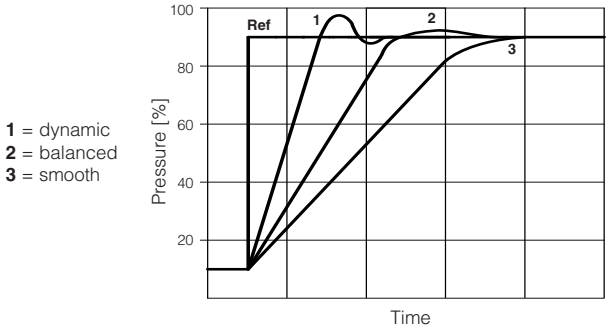

8 IO-LINK - only for **REB**, see tech. table **GS520**

IO-Link allows low cost digital communication between the valve and machine central unit. The valve is directly connected to a port of an IO-Link master (point-to-point connection) via low-cost unshielded cables for digital reference, diagnostic and settings. The IO-Link master works as a hub exchanging this information with the machine central unit via fieldbus.

9 FIELDBUS - only for **RES**, see tech. table **GS510**

Fieldbus allows valve direct communication with machine control unit for digital reference, valve diagnostics and settings. These execution allow to operate the valves through fieldbus or analog signals available on the main connector.

10 GENERAL CHARACTERISTICS

Assembly position	Any position
Subplate surface finishing to ISO 4401	Acceptable roughness index: Ra ≤ 0,8, recommended Ra 0,4 – Flatness ratio 0,01/100
MTTFd valves according to EN ISO 13849	150 years, for further details see technical table P007
Ambient temperature range	**R:** **Standard** = -20°C ÷ +70°C **/PE** option = -20°C ÷ +70°C **/BT** option = -40°C ÷ +60°C **REB, RES:** **Standard** = -20°C ÷ +60°C **/PE** option = -20°C ÷ +60°C **/BT** option = -40°C ÷ +60°C
Storage temperature range	**R:** **Standard** = -20°C ÷ +80°C **/PE** option = -20°C ÷ +80°C **/BT** option = -40°C ÷ +70°C **REB, RES:** **Standard** = -20°C ÷ +70°C **/PE** option = -20°C ÷ +70°C **/BT** option = -40°C ÷ +70°C
Surface protection	Zinc coating with black passivation, galvanic treatment (driver housing for REB and RES)
Corrosion resistance	Salt spray test (EN ISO 9227) > 200 h
Vibration resistance	See technical table G004 (for REB and RES)
Compliance	CE according to EMC directive 2014/30/EU (Immunity: EN 61000-6-2; Emission: EN 61000-6-3) RoHS Directive 2011/65/EU as last update by 2015/863/EU REACH Regulation (EC) n°1907/2006

11 HYDRAULIC CHARACTERISTICS - based on mineral oil ISO VG 46 at 50 °C

Valve model		**RZMO-*-030**
Max regulated pressure	[bar]	100; 210; 315; 350
Max pressure at port P	[bar]	350
Max pressure at port T	[bar]	210
Min regulated pressure	[bar]	see min. pressure / flow diagram at section 14
Min ÷ Max flow	[l/min]	2,5 ÷ 40
Response time 0-100% step signal (depending on installation) **(1)**	[ms]	≤ 45
Hysteresis		≤ 0,5 [% of max pressure]
Linearity		≤ 1,0 [% of max pressure]
Repeatability		≤ 0,2 [% of max pressure]
Thermal drift		zero point displacement < 1% at ΔT = 40°C

Note: above performance data refer to valves coupled with Atos electronic drivers, see section 3

(1) Average response time value; the pressure variation in consequence of a modification of the reference input signal to the valve is affected by the stiffness of the hydraulic circuit: greater is the stiffness of the circuit, faster is the dynamic response, see section 7

12 ELECTRICAL CHARACTERISTICS

Power supplies	Nominal : +24 VDC Rectified and filtered : VRMS = 20 ÷ 32 VMAX (ripple max 10 % VPP)				
Max power consumption	**R** = 30 W **REB**, **RES** = 50 W				
Max. solenoid current	3 A				
Coil resistance R at 20°C	3 ÷ 3,3 Ω				
Analog input signals	Voltage: range ±10 VDC (24 VMAX tolerant) Input impedance: Ri > 50 kΩ Current: range ±20 mA Input impedance: Ri = 500 Ω				
Monitor output	Voltage: maximum range 0 ÷ 10 VDC @ max 5 mA Current: maximum range 0 ÷ 20 mA @ max 500 Ω load resistance				
Enable input	Range: 0 ÷ 9 VDC (OFF state), 15 ÷ 24 VDC (ON state), 9 ÷ 15 VDC (not accepted); Input impedance: Ri > 87 kΩ				
Fault output	Output range : 0 ÷ 24 VDC (ON state ≅ VL+ [logic power supply] ; OFF state ≅ 0 V) @ max 50 mA; external negative voltage not allowed (e.g. due to inductive loads)				
Pressure transducer **(1)**	E-ATR-8/*/I Output signal: 4 ÷ 20 mA (see tech table **GS465**)				
Alarms	Solenoid not connected/short circuit, cable break with current reference signal, over/under temperature, current control monitoring, power supplies level, pressure transducer failure				
Insulation class	H (180°) Due to the occurring surface temperatures of the solenoid coils, the European standards ISO 13732-1 and EN982 must be taken into account				
Protection degree to DIN EN60529	**R** = IP65; **REB**, **RES** = IP66 / IP67 with mating connectors				
Duty factor	Continuous rating (ED=100%)				
Tropicalization	Tropical coating on electronics PCB				
Additional characteristics	Short circuit protection of solenoid's current supply; current control by P.I.D. with rapid solenoid switching; protection against reverse polarity of power supply				
Communication interface	USB Atos ASCII coding	IO-Link Interface and System Specification 1.1.3	CANopen EN50325-4 + DS408	PROFIBUS DP EN50170-2/IEC61158	EtherCAT IEC 61158
Communication physical layer	not insulated USB 2.0 + USB OTG	SDCI class port B	optical insulated CAN ISO11898	optical insulated RS485	Fast Ethernet, insulated 100 Base TX
Recommended wiring cable	LiYCY shielded cables, see section 21				

(1) In case of pressure transducer failure, the valve's reaction can be configured through Atos E-SW-SETUP software to:
- cut off the current to solenoid, therefore the regulated pressure will be reduced to minimum value (default setting)
- automatically switch the pressure control from closed loop (dynamic, balanced, smooth) to open loop, to let the valve to temporarily operate with reduced regulation accuracy

Note: a maximum time of 500 ms (depending on communication type) has to be considered between the driver energizing with the 24 VDC power supply and when the valve is ready to operate. During this time the current to the valve coils is switched to zero.

13 SEALS AND HYDRAULIC FLUIDS - for other fluids not included in below table, consult our technical office

Seals, recommended fluid temperature	NBR seals (standard) = -20°C ÷ +60°C (+80°C for **R**), with HFC hydraulic fluids = -20°C ÷ +50°C FKM seals (/PE option) = -20°C ÷ +80°C NBR low temp. seals (/BT option) = -40°C ÷ +60°C, with HFC hydraulic fluids = -20°C ÷ +50°C		
Recommended viscosity	20 ÷ 100 mm²/s - max allowed range 15 ÷ 380 mm²/s		
Max fluid contamination level — normal operation	ISO4406 class 18/16/13 NAS1638 class 7		see also filter section at www.atos.com or KTF catalog
Max fluid contamination level — longer life	ISO4406 class 16/14/11 NAS1638 class 5		
Hydraulic fluid	**Suitable seals type**	**Classification**	**Ref. Standard**
Mineral oils	NBR, FKM, NBR low temp.	HL, HLP, HLPD, HVLP, HVLPD	DIN 51524
Flame resistant without water	FKM	HFDU, HFDR	ISO 12922
Flame resistant with water	NBR, NBR low temp.	HFC	

14 DIAGRAMS (based on mineral oil ISO VG 46 at 50 °C)

1 Regulation diagrams
with flow rate Q = 10 l/min

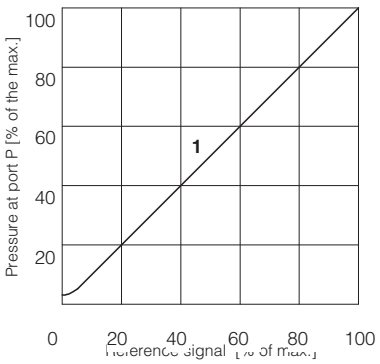

2 Pressure/flow diagrams
with reference signal set at Q = 10 l/min

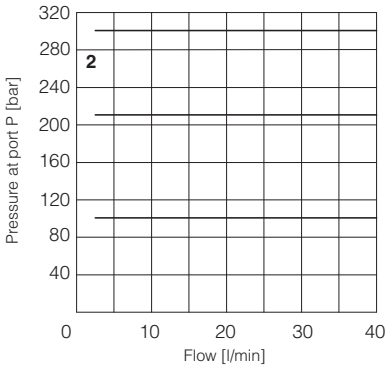

3-4 Minimum pressure/flow diagrams
with zero reference signal

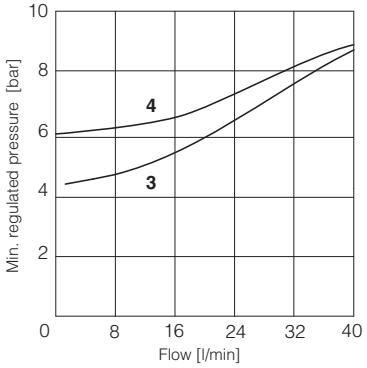

3 = All the models (except /350)
4 = All the models (only /350)

15 ELECTRONIC OPTIONS - only for **REB-NP** and **RES**

I = This option provides 4 ÷ 20 mA current reference and monitor signals, instead of the standard 0 ÷ 10 VDC.
Input signal can be reconfigured via software selecting between voltage and current, within a maximum range of ±10 VDC or ±20 mA.
It is normally used in case of long distance between the machine control unit and the valve or where the reference signal can be affected by electrical noise; the valve functioning is disabled in case of reference signal cable breakage.

Q = This option permits to inhibit the valve function without removing the power supply to the driver. Upon disable command the current to the solenoid is zeroed and the valve's spool moves to rest position.
The option /Q is suggested for all cases where the valve has to be frequently inhibited during the machine cycle – see 18.5 for signal specifications.

Z = This option provides, on the 12 pin main connector, the following additional features:
Fault output signal - see 18.6
Enable input signal - see above option /Q
Power supply for driver's logics and communication - see 18.2

16 POSSIBLE COMBINED OPTIONS

Electronic options: /IQ, /IZ

Note: **/T** Bluetooth adapter option can be combined with all other options

17 AIR BLEEDING

At the first valve commissioning the air eventually trapped inside the solenoid must be bled-off through the screw ① located at the rear side of the solenoid housing.
The presence of air may cause pressure instability and vibrations.

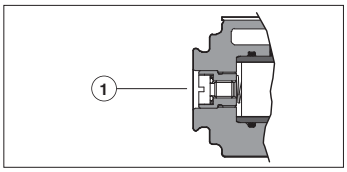

18 POWER SUPPLY AND SIGNALS SPECIFICATIONS - only for **REB-NP** and **RES**

Generic electrical output signals of the valve (e.g. fault or monitor signals) must not be directly used to activate safety functions, like to switch-ON/OFF the machine's safety components, as prescribed by the European standards (Safety requirements of fluid technology systems and components-hydraulics, ISO 4413).

For **REB-IL** signals see section 19

18.1 Power supply (V+ and V0)

The power supply must be appropriately stabilized or rectified and filtered: apply at least a 10000 μF/40 V capacitance to single phase rectifiers or a 4700 μF/40 V capacitance to three phase rectifiers. In case of separate power supply see 18.2.

⚠ A safety fuse is required in series to each power supply: 2,5 A time lag fuse.

18.2 Power supply for driver's logic and communication (VL+ and VL0) - only for **/Z** option

The power supply for driver's logic and communication must be appropriately stabilized or rectified and filtered: apply at least a 10000 μF/40 V capacitance to single phase rectifiers or a 4700 μF/40 V capacitance to three phase rectifiers.
The separate power supply for driver's logic on pin 9 and 10, allow to remove solenoid power supply from pin 1 and 2 maintaining active the diagnostics, USB and fieldbus communications.

⚠ A safety fuse is required in series to each driver's logic and communication power supply: 500 mA fast fuse.

18.3 Pressure reference input signal (P_INPUT+)

The driver controls in closed loop the current to the valve pressure proportionally to the external reference input signal.
Reference input signal is factory preset according to selected valve code, defaults are 0 ÷ 10 VDC for standard and 4 ÷ 20 mA for /I option.
Input signal can be reconfigured via software selecting between voltage and current, within a maximum range of ±10 VDC or ± 20 mA.
Drivers with fieldbus interface (BC, BP, EH) can be software set to receive reference signal directly by the machine control unit (fieldbus reference).
Analog reference input signal can be used as on-off commands with input range 0 ÷ 24 VDC.

18.4 Pressure monitor output signal (P_MONITOR)

The driver generates an analog output signal proportional to the actual pressure of the valve; the monitor output signal can be software set to show other signals available in the driver (e.g. analog reference, fieldbus reference).
Monitor output signal is factory preset according to selected valve code, defaults settings are 0 ÷10 VDC for standard and 4 ÷ 20 mA for /I option.
Output signal can be reconfigured via software selecting between voltage and current, within a maximum range of 0 ÷10 VDC or 0 ÷ 20 mA.

18.5 Enable input signal (ENABLE) - not for standard

To enable the driver, supply a 24 VDC on pin 3 (pin C): Enable input signal allows to enable/disable the current supply to the solenoid, without removing the electrical power supply to the driver; it is used to active the communication and the other driver functions when the valve must be disabled for safety reasons. This condition **does not comply** with norms IEC 61508 and ISO 13849.
Enable input signal can be used as generic digital input by software selection.

18.6 Fault output signal (FAULT) - only for **/Z** option

Fault output signal indicates fault conditions of the driver (solenoid short circuits/not connected, reference signal broken for 4 ÷ 20 mA input, etc.).
Fault presence corresponds to 0 VDC, normal working corresponds to 24 VDC. Fault status is not affected by the Enable input signal.

19 IO-LINK SIGNALS SPECIFICATIONS - only for **REB-IL**

19.1 Power supply for IO-Link communication (L+ and L-)

The IO-Link master provides dedicated 24 VDC power supply for IO-Link communication.
Maximum power consumption: 2 W
Internal electrical isolation of power L+, L- from P24, N24

19.2 Power supply for driver's logic and valve regulation (P24 and N24)

The IO-Link master provides dedicated 24 VDC power supply for valve regulation, logics and diagnostics.
Maximum power consumption: 50 W
Internal electrical isolation of power P24, N24 from L+, L-

19.3 IO-Link data line (C/Q)

C/Q signal is used to establish communication between IO-Link master and valve.

20 ELECTRONIC CONNECTIONS

20.1 Main connector signals - 7 pin (A1) Standard and /Q option - for REB-NP and RES

PIN	Standard	/Q	TECHNICAL SPECIFICATIONS	NOTES
A	**V+**		Power supply 24 VDC	Input - power supply
B	**V0**		Power supply 0 VDC	Gnd - power supply
C	**AGND**		Analog ground	Gnd - analog signal
		ENABLE	Enable (24 VDC) or disable (0 VDC) the driver, referred to V0	Input - on/off signal
D	**P_INPUT+**		Pressure reference input signal: ±10 VDC / ±20 mA maximum range Defaults are 0 ÷ 10 VDC for standard and 4 ÷ 20 mA for /I option	Input - analog signal **Software selectable**
E	**INPUT-**		Negative reference input signal for P_INPUT+	Input - analog signal
F	**P_MONITOR** referred to: AGND	V0	Pressure monitor output signal: 0 ÷ 10 VDC / 0 ÷ 20 mA maximum range Defaults are 0 ÷ 10 VDC for standard and 4 ÷ 20 mA for /I option	Output - analog signal **Software selectable**
G	**EARTH**		Internally connected to driver housing	

20.2 Main connector signals - 12 pin (A2) /Z option - for REB-NP and RES

PIN	/Z	TECHNICAL SPECIFICATIONS	NOTES
1	**V+**	Power supply 24 VDC	Input - power supply
2	**V0**	Power supply 0 VDC	Gnd - power supply
3	**ENABLE**	Enable (24 VDC) or disable (0 VDC) the driver, referred to VL0	Input - on/off signal
4	**P_INPUT+**	Pressure reference input signal: ±10 VDC / ±20 mA maximum range Defaults are 0 ÷ 10 VDC for standard and 4 ÷ 20 mA for /I option	Input - analog signal **Software selectable**
5	**INPUT-**	Negative reference input signal for INPUT+	Input - analog signal
6	**P_MONITOR**	Pressure monitor output signal: 0 ÷ 10 VDC / 0 ÷ 20 mA maximum range, referred to VL0 Defaults are 0 ÷ 10 VDC for standard and 4 ÷ 20 mA for /I option	Output - analog signal **Software selectable**
7	**NC**	Do not connect	
8	**NC**	Do not connect	
9	**VL+**	Power supply 24 VDC for driver's logic and communication	Input - power supply
10	**VL0**	Power supply 0 VDC for driver's logic and communication	Gnd - power supply
11	**FAULT**	Fault (0 VDC) or normal working (24 VDC), referred to VL0	Output - on/off signal
PE	**EARTH**	Internally connected to driver housing	

Note: do not disconnect VL0 before VL+ when the driver is connected to PC USB port

20.3 IO-Link connector signals - M12 - 5 pin - Coding A, port class B (A) only for REB-IL

PIN	SIGNAL	TECHNICAL SPECIFICATIONS	NOTES
1	**L+**	Power supply 24 VDC for IO-Link communication	Input - power supply
2	**P24**	Power supply 24 VDC for valve regulation, logics and diagnostics	Input - power supply
3	**L-**	Power supply 0 VDC for IO-Link communication	Gnd - power supply
4	**C/Q**	IO-Link data line	Input / Output - signal
5	**N24**	Power supply 0 VDC for valve regulation, logics and diagnostics	Gnd - power supply

Note: L+, L- and P24, N24 are electrically isolated

20.4 Communication connectors - for REB (B) and RES (B) - (C)

(B) **USB connector - M12 - 5 pin** always present

PIN	SIGNAL	TECHNICAL SPECIFICATION (1)
1	**+5V_USB**	Power supply
2	**ID**	Identification
3	**GND_USB**	Signal zero data line
4	**D-**	Data line -
5	**D+**	Data line +

(C1) **BC fieldbus execution, connector - M12 - 5 pin (2)**

PIN	SIGNAL	TECHNICAL SPECIFICATION (1)
1	**CAN_SHLD**	Shield
2	**NC**	do not connect
3	**CAN_GND**	Signal zero data line
4	**CAN_H**	Bus line (high)
5	**CAN_L**	Bus line (low)

(C2) **BP fieldbus execution, connector - M12 - 5 pin (2)**

PIN	SIGNAL	TECHNICAL SPECIFICATION (1)
1	**+5V**	Termination supply signal
2	**LINE-A**	Bus line (high)
3	**DGND**	Data line and termination signal zero
4	**LINE-B**	Bus line (low)
5	**SHIELD**	

(C3) (C4) **EH fieldbus execution, connector - M12 - 4 pin (2)**

PIN	SIGNAL	TECHNICAL SPECIFICATION (1)
1	**TX+**	Transmitter
2	**RX+**	Receiver
3	**TX-**	Transmitter
4	**RX-**	Receiver
Housing	**SHIELD**	

(1) Shield connection on connector's housing is recommended

(2) Only for **RES** execution

20.5 Solenoid connection - only for R

PIN	SIGNAL	TECHNICAL SPECIFICATION	Connector code 666
1	**COIL**	Power supply	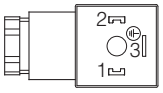
2	**COIL**	Power supply	
3	**GND**	Ground	

20.6 Pressure transducer connection - only for R

PIN	SIGNAL	TECHNICAL SPECIFICATION	Connector code ZBE-08
1	**V+**	Power supply	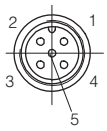
2	**NC**	Not connected	
3	**TR**	Output signal 4 ÷ 20 mA	
4	**NC**	Not connected	
5	**NC**	Not connected	

20.7 REB-NP connections layout

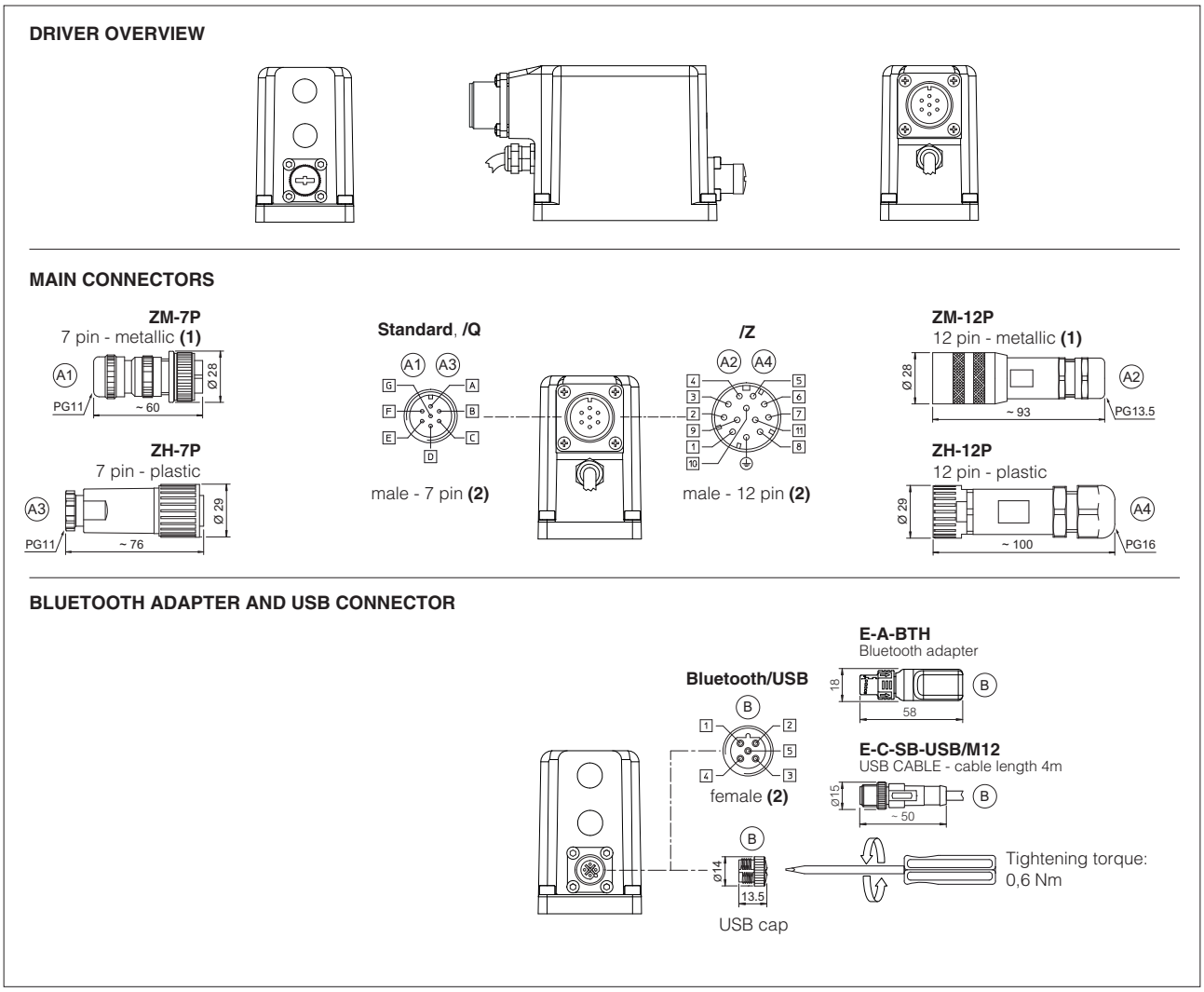

(1) Use of metallic connectors is strongly recommended in order to fulfill EMC requirements **(2)** Pin layout always referred to driver's view

20.8 REB-IL connections layout

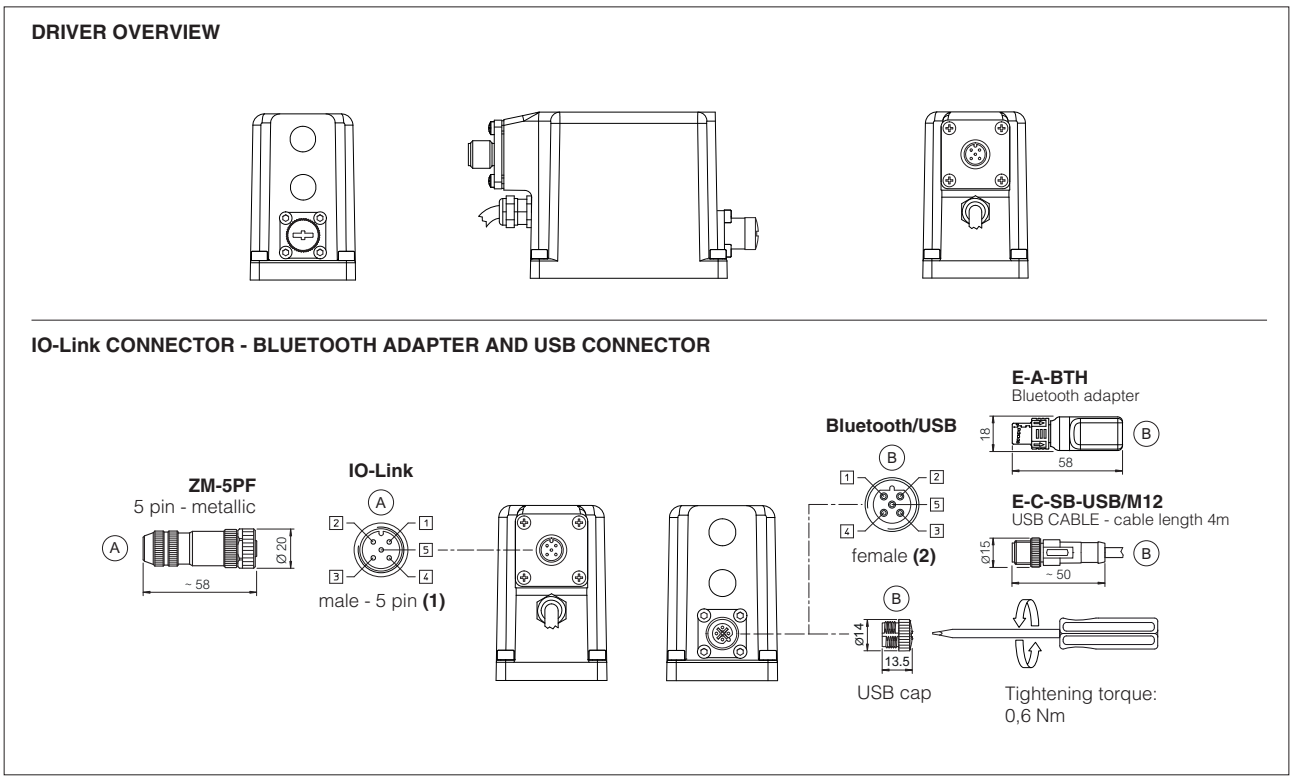

(1) Use of metallic connectors is strongly recommended in order to fulfill EMC requirements **(2)** Pin layout always referred to driver's view

20.9 RES connections layout

DRIVER OVERVIEW

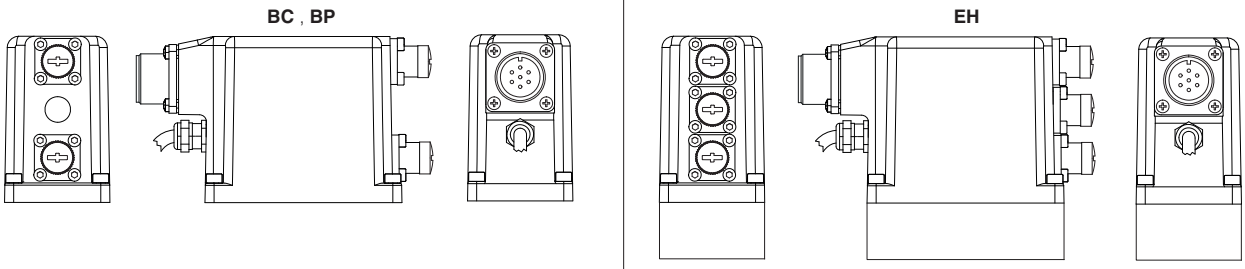

MAIN CONNECTORS

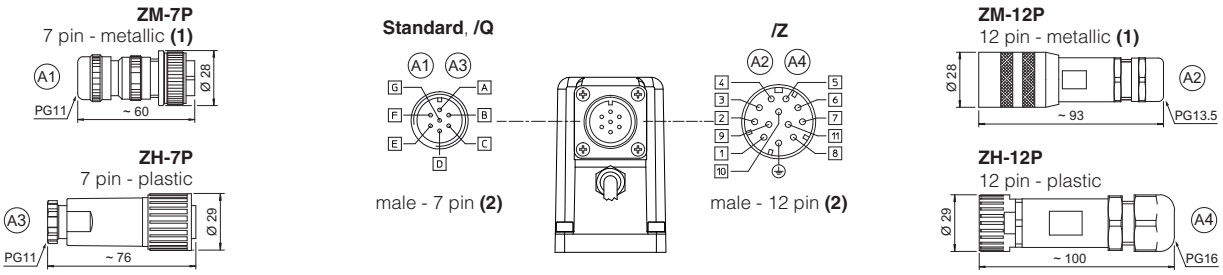

FIELDBUS CONNECTORS

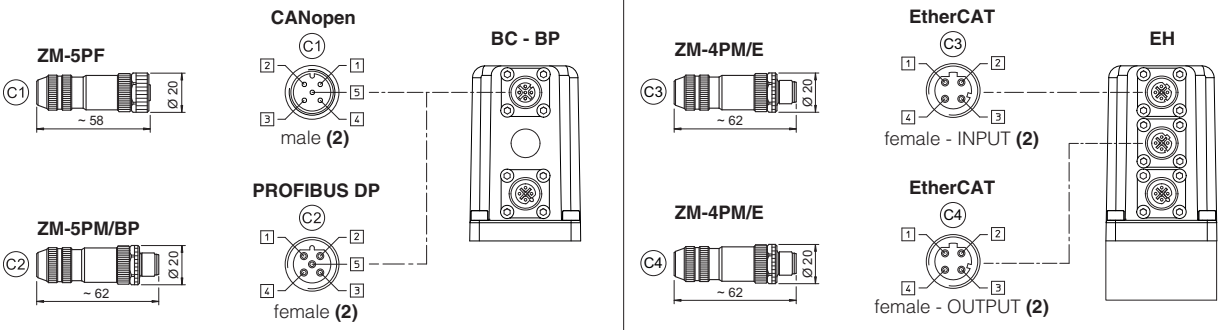

BLUETOOTH ADAPTER AND USB CONNECTOR

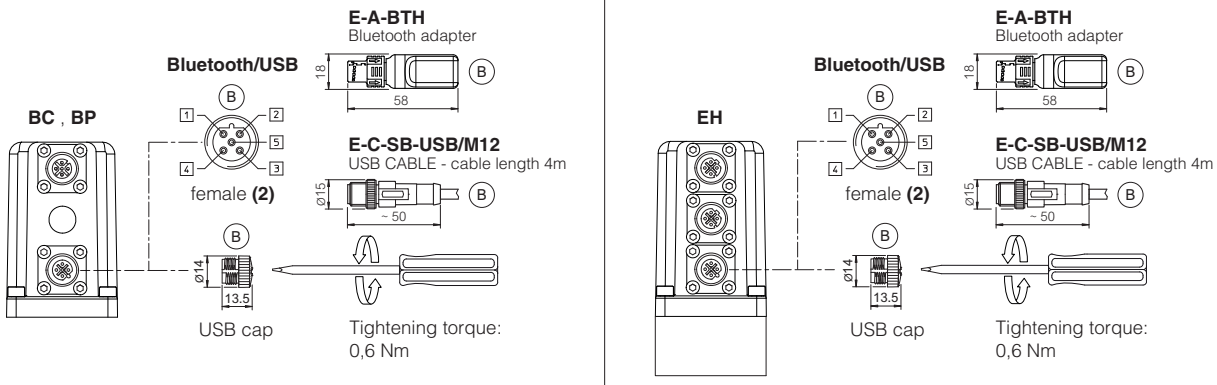

(1) Use of metallic connectors is strongly recommended in order to fulfill EMC requirements **(2)** Pin layout always referred to driver's view

21 CONNECTORS CHARACTERISTICS - to be ordered separately

21.1 Main connectors - 7 pin - for REB-NP and RES

CONNECTOR TYPE	POWER SUPPLY AND SIGNALS	POWER SUPPLY AND SIGNALS
CODE	(A1) ZM-7P	(A3) ZH-7P
Type	7pin female straight circular	7pin female straight circular
Standard	According to MIL-C-5015	According to MIL-C-5015
Material	Metallic	Plastic reinforced with fiber glass
Cable gland	PG11	PG11
Recommended cable	LiYCY 7 x 0,75 mm^2 max 20 m (logic and power supply) or LiYCY 7 x 1 mm^2 max 40 m (logic and power supply)	LiYCY 7 x 0,75 mm^2 max 20 m (logic and power supply) or LiYCY 7 x 1 mm^2 max 40 m (logic and power supply)
Conductor size	up to 1 mm^2 - available for 7 wires	up to 1 mm^2 - available for 7 wires
Connection type	to solder	to solder
Protection (EN 60529)	IP 67	IP 67

21.2 Main connectors - 12 pin - for REB-NP and RES

CONNECTOR TYPE	POWER SUPPLY AND SIGNALS	POWER SUPPLY AND SIGNALS
CODE	(A2) ZM-12P	(A4) ZH-12P
Type	12pin female straight circular	12pin female straight circular
Standard	DIN 43651	DIN 43651
Material	Metallic	Plastic reinforced with fiber glass
Cable gland	PG13,5	PG16
Recommended cable	LiYCY 12 x 0,75 mm^2 max 20 m (logic and power supply)	LiYCY 10 x 0,14mm^2 max 40 m (logic) LiYY 3 x 1mm^2 max 40 m (power supply)
Conductor size	0,5 mm^2 to 1,5 mm^2 - available for 12 wires	0,14 mm^2 to 0,5 mm^2 - available for 9 wires 0,5 mm^2 to 1,5 mm^2 - available for 3 wires
Connection type	to crimp	to crimp
Protection (EN 60529)	IP 67	IP 67

21.3 IO-Link connector - only for REB-IL

CONNECTOR TYPE	IL IO-Link
CODE	(A) ZM-5PF
Type	5pin female straight circular
Standard	M12 coding A – IEC 61076-2-101
Material	Metallic
Cable gland	Pressure nut - cable diameter 6÷8 mm
Recommended cable	5 x 0,75 mm^2 max 20 m
Connection type	screw terminal
Protection (EN 60529)	IP 67

21.4 Fieldbus communication connectors - only for RES

CONNECTOR TYPE	BC CANopen (1)		BP PROFIBUS DP (1)		EH EtherCAT (2)
CODE	(C1) ZM-5PF	(C2) ZM-5PM	(C1) ZM-5PF/BP	(C2) ZM-5PM/BP	(C1) (C2) ZM-4PM/E
Type	5 pin female straight circular	5 pin male straight circular	5 pin female straight circular	5 pin male straight circular	4 pin male straight circular
Standard	M12 coding A – IEC 61076-2-101		M12 coding B – IEC 61076-2-101		M12 coding D – IEC 61076-2-101
Material	Metallic		Metallic		Metallic
Cable gland	Pressure nut - cable diameter 6÷8 mm		Pressure nut - cable diameter 6÷8 mm		Pressure nut - cable diameter 4÷8 mm
Cable	CANbus Standard (DR 303-1)		PROFIBUS DP Standard		Ethernet standard CAT-5
Connection type	screw terminal		screw terminal		terminal block
Protection (EN 60529)	IP67		IP 67		IP 67

(1) E-TRM-** terminators can be ordered separately - see tech table **GS500**

(2) Internally terminated

22 FASTENING BOLTS AND SEALS

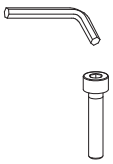	**Fastening bolts:** 4 socket head screws M5x50 class 12.9 Tightening torque = 8 Nm
	Seals: 2 OR 108 Diameter of ports P, T: Ø 7,5 mm Ports A, B connected to port T

23 INSTALLATION DIMENSIONS [mm]

ISO 4401: 2005
Mounting surface: 4401-03-02-0-05 (see table P005)

Mass [kg]		
R	**REB, RES**	**RES-EH**
3,1	3,6	3,7

RZMO-R-P

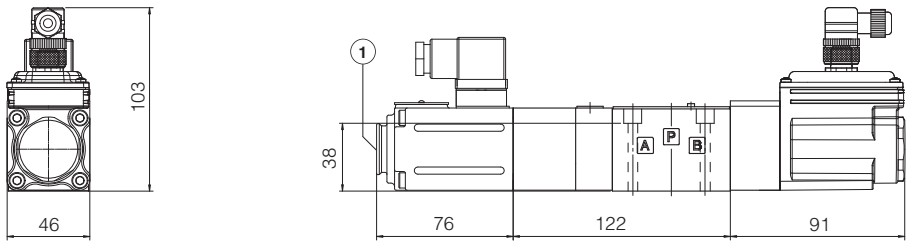

RZMO-REB-P-NP
RZMO-REB-P-IL

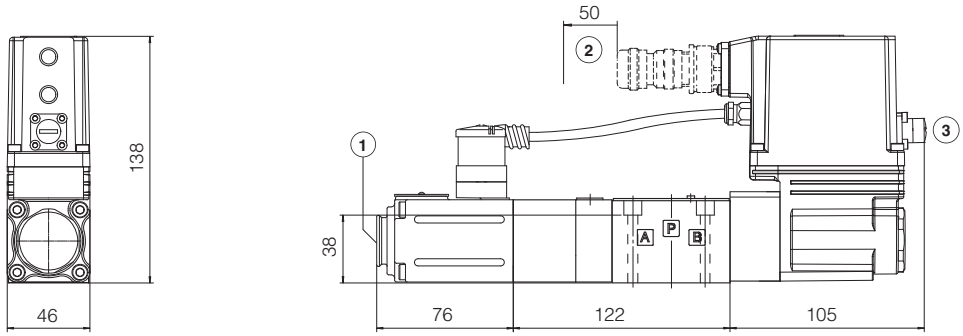

RZMO-RES-P-BP
RZMO-RES-P-BC

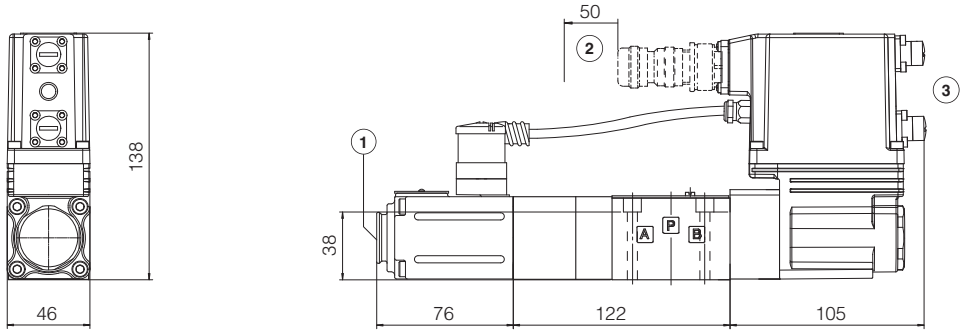

RZMO-RES-P-EH

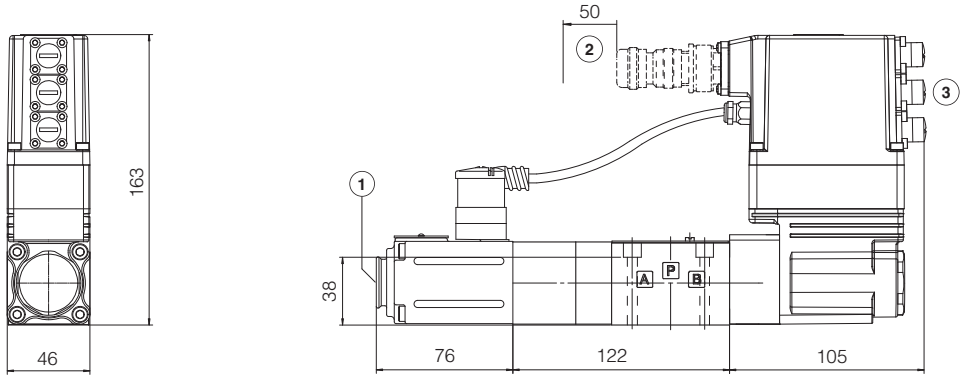

(1) = Air bleeding, see section 17

(2) = Space required for connection cable and for connector removal

(3) = The dimensions of connectors and Bluetooth adapter must be considered, see section 20.7, 20.8 and 20.9

24 RELATED DOCUMENTATION

FS001	Basics for digital electrohydraulics
FS900	Operating and maintenance information for proportional valves
GS203	E-BM-RES digital driver
GS500	Programming tools
GS510	Fieldbus
GS520	IO-Link interface
K800	Electric and electronic connectors
P005	Mounting surfaces for electrohydraulic valves
QB400	Quickstart for REB valves commissioning
QF400	Quickstart for RES valves commissioning
E-MAN-BM-RES	E-BM-RES user manual (off-board)
E-MAN-RI-REB	REB user manual
E-MAN-RI-RES	RES user manual

Digital proportional relief valves high performance

piloted, with on-board pressure transducer

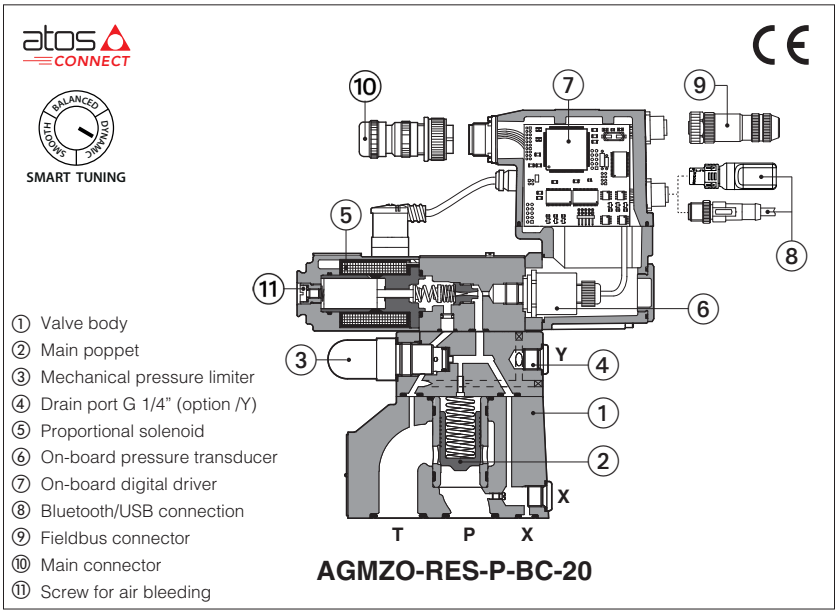

AGMZO-RES-P-BC-20

AGMZO-R, AGMZO-REB, AGMZO-RES

Poppet type, piloted, digital proportional relief valves with on-board pressure transducer for pressure closed loop controls.

R to be coupled with off-board driver.

REB basic execution, with on-board digital driver, with analog reference signal or IO-Link interface for digital reference signals, valve settings, and real-time diagnostics.

RES full execution, with on-board digital driver which includes also fieldbus interfaces for digital reference signals, valve settings, and real-time diagnostics.

For **REB** and **RES**, Bluetooth/USB connection is always present for valve settings via mobile App and Atos PC software.

Size: **10**, **20**, **32** - ISO 6264
Max flow: **200**, **400**, **600 l/min**
Max pressure: **350 bar**

1 MODEL CODE

AGMZO	-	RES	-	P	-	BC	-	10	/	315	/	*	/	*	/	*	/	*

Proportional pressure relief valve, piloted

R = off-board driver, see section 3
REB = basic on-board digital driver
RES = full on-board digital driver

P = with on-board pressure transducer

IO-Link interface, only for REB, see section 8 :
NP = Not present **IL** = IO-Link

Fieldbus interfaces, only for RES, see section 9 :
BC = CANopen **EH** = EtherCAT
BP = PROFIBUS DP

Valve size ISO 6264: **10, 20, 32**

Max regulated pressure:
100 = 100 bar **315** = 315 bar
210 = 210 bar **350** = 350 bar

Hydraulic options (1):
E = external pilot
Y = external drain (only pipe connection G ¼")

Electronic options, only for **REB-NP** and **RES (1)**:
I = current reference input and monitor 4 ÷ 20 mA
Q = enable signal
Z = double power supply, enable, fault and monitor signals - 12 pin connector

Bluetooth option, only for **REB** and **RES (1)**, see section 6 :
T = Bluetooth adapter supplied with the valve

Series number

Seals material, see section 13 :
- = NBR
PE = FKM
BT = NBR low temp.

(1) For possible combined options, see section 17

2 HYDRAULIC SYMBOLS

AGMZO-R	AGMZO-REB AGMZO-RES
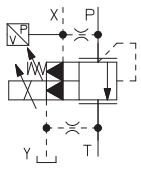	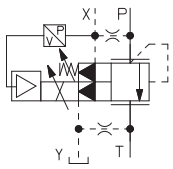

3 OFF-BOARD ELECTRONIC DRIVER - only for **R**

Drivers model	E-BM-RES
Type	Digital
Format	DIN rail panel format
Tech table	GS203

4 GENERAL NOTES

Atos digital proportionals valves are CE marked according to the applicable directives (e.g. Immunity and Emission EMC Directive).
Installation, wirings and start-up procedures must be performed according to the general prescriptions shown in tech table **FS900** and in the user manuals included in the E-SW-SETUP programming software.

5 VALVE SETTINGS AND PROGRAMMING TOOLS - see tech. table **GS500**

5.1 Atos CONNECT mobile App

Free downloadable App for smartphones and tablets which allows quick access to valve main functional parameters and basic diagnostic information via Bluetooth, thus avoiding physical cable connection and significantly reducing commissioning time.
Atos CONNECT supports Atos digital valve drivers equipped with E-A-BTH adapter or with built-in Bluetooth. It does not support valves with p/Q control or axis controls.

Download on the App Store

GET IT ON Google Play

5.2 E-SW-SETUP PC software

Free downloadable software for PC allows to set all valve functional parameters and to access complete diagnostic information of digital valve drivers via Bluetooth/USB service port.
Atos E-SW-SETUP PC software supports all Atos digital valve drivers and it is available at www.atos.com in MyAtos area.

WARNING: drivers USB port is not isolated! For E-C-SB-USB/M12 cable, the use of E-A-SB-USB/OPT isolator adapter is highly recommended for PC protection

Bluetooth or USB connection

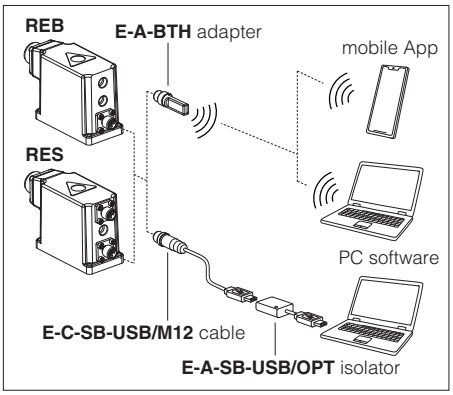

6 BLUETOOTH OPTION - see tech. table **GS500**

T option adds Bluetooth® connectivity to Atos valve drivers thanks to E-A-BTH adapter, which can be left permanently installed on-board, to allow the Bluetooth connection with the valve drivers at any time. E-A-BTH adapter can also be purchased separately and used to connect with any supported Atos digital product.
Bluetooth connection to the valve can be protected against unauthorised access by setting a personal password. The adapter leds visually indicates the status of valve driver and Bluetooth connection.

WARNING: for the list of countries where the Bluetooth adapter has been approved, see tech. table **GS500**
T option is not available for the Indian market, so the Bluetooth adapter must be ordered separately.

7 SMART TUNING

Smart tuning allows to adjust the valve dynamic response in order to match different hydraulic conditions and performance requirements.

The valve is provided with 3 factory settings for the pressure control:

- **dynamic** fast response time for best dynamic performances. Default factory setting for pressure valves
- **balanced** average response time suitable for major applications
- **smooth** attenuated response time for slow regulation without overshoots

Smart tuning setting can be switched from Dynamic (default) to Balanced or Smooth via software or fieldbus; if requested, performances can be further customized directly tuning each single control parameter. For details consult related manuals E-MAN-* and Quickstart, see section 27.

Below indications have to be considered as a general guideline, being affected by hydraulic circuit stiffness, working flow and dead volume.

High stiffness - Low flow - Small volume

1 = dynamic
2 = balanced
3 = smooth

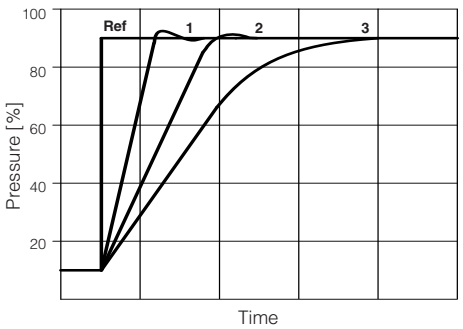

Low stiffness - High flow - Large volume

1 = dynamic
2 = balanced
3 = smooth

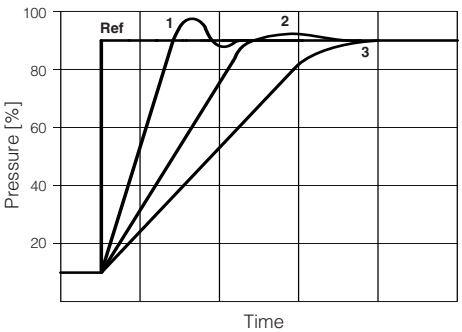

8 IO-LINK - only for **REB**, see tech. table **GS520**

IO-Link allows low cost digital communication between the valve and machine central unit. The valve is directly connected to a port of an IO-Link master (point-to-point connection) via low-cost unshielded cables for digital reference, diagnostic and settings. The IO-Link master works as a hub exchanging this information with the machine central unit via fieldbus.

9 FIELDBUS - only for **RES**, see tech. table **GS510**

Fieldbus allows valve direct communication with machine control unit for digital reference, valve diagnostics and settings. These execution allow to operate the valves through fieldbus or analog signals available on the main connector.

10 GENERAL CHARACTERISTICS

Assembly position	Any position
Subplate surface finishing to ISO 4401	Acceptable roughness index: Ra ≤ 0,8, recommended Ra 0,4 – Flatness ratio 0,01/100
MTTFd valves according to EN ISO 13849	75 years, for further details see technical table P007
Ambient temperature range	**R:** **Standard** = -20°C ÷ +70°C **/PE** option = -20°C ÷ +70°C **/BT** option = -40°C ÷ +60°C **REB, RES:** **Standard** = -20°C ÷ +60°C **/PE** option = -20°C ÷ +60°C **/BT** option = -40°C ÷ +60°C
Storage temperature range	**R:** **Standard** = -20°C ÷ +80°C **/PE** option = -20°C ÷ +80°C **/BT** option = -40°C ÷ +70°C **REB, RES:** **Standard** = -20°C ÷ +70°C **/PE** option = -20°C ÷ +70°C **/BT** option = -40°C ÷ +70°C
Surface protection	Zinc coating with black passivation, galvanic treatment (driver housing for REB and RES)
Corrosion resistance	Salt spray test (EN ISO 9227) > 200 h
Vibration resistance	See technical table G004 (for REB and RES)
Compliance	CE according to EMC directive 2014/30/EU (Immunity: EN 61000-6-2; Emission: EN 61000-6-3) RoHS Directive 2011/65/EU as last update by 2015/863/EU REACH Regulation (EC) n°1907/2006

11 HYDRAULIC CHARACTERISTICS - based on mineral oil ISO VG 46 at 50 °C

Valve model		AGMZO-*-10	AGMZO-*-20	AGMZO-*-32
Max regulated pressure	[bar]	100; 210; 315; 350		
Max pressure at port P	[bar]	350		
Max pressure at port T	[bar]	210		
Min regulated pressure	[bar]	see min. pressure / flow diagrams at section 14		
Max flow	[l/min]	200	400	600
Response time 0-100% step signal (depending on installation) **(1)**	[ms]	≤ 80	≤ 100	≤ 115
Hysteresis		≤ 0,5 [% of max pressure]		
Linearity		≤ 1,0 [% of max pressure]		
Repeatability		≤ 0,2 [% of max pressure]		
Thermal drift		zero point displacement < 1% at ΔT = 40°C		

Note: above performance data refer to valves coupled with Atos electronic drivers, see section 3

(1) Average response time value; the pressure variation in consequence of a modification of the reference input signal to the valve is affected by the stiffness of the hydraulic circuit: greater is the stiffness of the circuit, faster is the dynamic response, see section 7

12 ELECTRICAL CHARACTERISTICS

Power supplies	Nominal : +24 VDC Rectified and filtered : VRMS = 20 ÷ 32 VMAX (ripple max 10 % VPP)				
Max power consumption	**R** = 30 W **REB**, **RES** = 50 W				
Max. solenoid current	3 A				
Coil resistance R at 20°C	3 ÷ 3,3 Ω				
Analog input signals	Voltage: range ±10 VDC (24 VMAX tolerant) Input impedance: Ri > 50 kΩ Current: range ±20 mA Input impedance: Ri = 500 Ω				
Monitor output	Voltage: maximum range 0 ÷ 10 VDC @ max 5 mA Current: maximum range 0 ÷ 20 mA @ max 500 Ω load resistance				
Enable input	Range: 0 ÷ 9 VDC (OFF state), 15 ÷ 24 VDC (ON state), 9 ÷ 15 VDC (not accepted); Input impedance: Ri > 87 kΩ				
Fault output	Output range : 0 ÷ 24 VDC (ON state ≅ VL+ [logic power supply] ; OFF state ≅ 0 V) @ max 50 mA; external negative voltage not allowed (e.g. due to inductive loads)				
Pressure transducer **(1)**	E-ATR-8/*/I Output signal: 4 ÷ 20 mA (see tech table **GS465**)				
Alarms	Solenoid not connected/short circuit, cable break with current reference signal, over/under temperature, current control monitoring, power supplies level, pressure transducer failure				
Insulation class	H (180°) Due to the occurring surface temperatures of the solenoid coils, the European standards ISO 13732-1 and EN982 must be taken into account				
Protection degree to DIN EN60529	**R** = IP65; **REB**, **RES** = IP66 / IP67 with mating connectors				
Duty factor	Continuous rating (ED=100%)				
Tropicalization	Tropical coating on electronics PCB				
Additional characteristics	Short circuit protection of solenoid's current supply; current control by P.I.D. with rapid solenoid switching; protection against reverse polarity of power supply				
Communication interface	USB Atos ASCII coding	IO-Link Interface and System Specification 1.1.3	CANopen EN50325-4 + DS408	PROFIBUS DP EN50170-2/IEC61158	EtherCAT IEC 61158
Communication physical layer	not insulated USB 2.0+USB OTG	SDCI class port B	optical insulated CAN ISO11898	optical insulated RS485	Fast Ethernet, insulated 100 Base TX
Recommended wiring cable	LiYCY shielded cables, see section 24				

(1) In case of pressure transducer failure, the valve's reaction can be configured through Atos E-SW-SETUP software to:
- cut off the current to solenoid, therefore the regulated pressure will be reduced to minimum value (default setting)
- automatically switch the pressure control from closed loop (dynamic, balanced, smooth) to open loop, to let the valve to temporarily operate with reduced regulation accuracy

Note: a maximum time of 500 ms (depending on communication type) has to be considered between the driver energizing with the 24 VDC power supply and when the valve is ready to operate. During this time the current to the valve coils is switched to zero.

13 SEALS AND HYDRAULIC FLUIDS - for other fluids not included in below table, consult our technical office

Seals, recommended fluid temperature		NBR seals (standard) = -20°C ÷ +60°C (+80°C for **R**), with HFC hydraulic fluids = -20°C ÷ +50°C FKM seals (/PE option) = -20°C ÷ +80°C NBR low temp. seals (/BT option) = -40°C ÷ +60°C, with HFC hydraulic fluids = -20°C ÷ +50°C		
Recommended viscosity		20 ÷ 100 mm²/s - max allowed range 15 ÷ 380 mm²/s		
Max fluid contamination level	normal operation	ISO4406 class 18/16/13 NAS1638 class 7		see also filter section at www.atos.com or KTF catalog
	longer life	ISO4406 class 16/14/11 NAS1638 class 5		
Hydraulic fluid		**Suitable seals type**	**Classification**	**Ref. Standard**
Mineral oils		NBR, FKM, NBR low temp.	HL, HLP, HLPD, HVLP, HVLPD	DIN 51524
Flame resistant without water		FKM	HFDU, HFDR	ISO 12922
Flame resistant with water		NBR, NBR low temp.	HFC	

14 DIAGRAMS (based on mineral oil ISO VG 46 at 50 °C)

1 = Regulation diagrams
with flow rate Q = 50 l/min

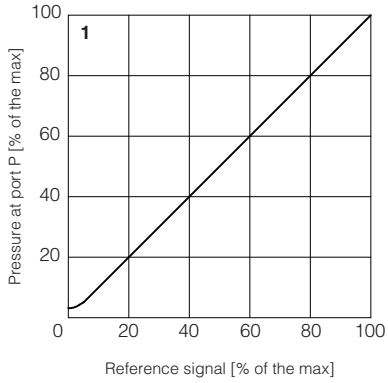

2 = Pressure/flow diagrams
with reference signal set at Q = 50 l/min

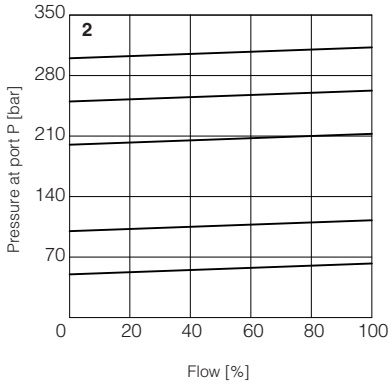

3-8 = Min. pressure/flow diagrams
with zero reference signal

3 = AGMZO-*-10/100, 210, 315
4 = AGMZO-*-10/350
5 = AGMZO-*-20/100, 210, 315
6 = AGMZO-*-20/350
7 = AGMZO-*-32/100, 210, 315
8 = AGMZO-*-32/350

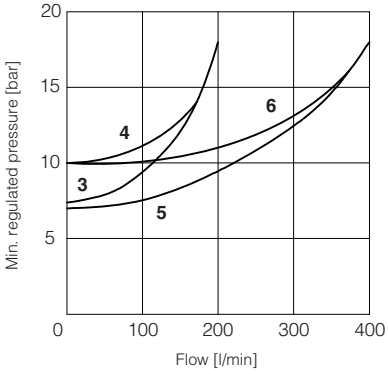

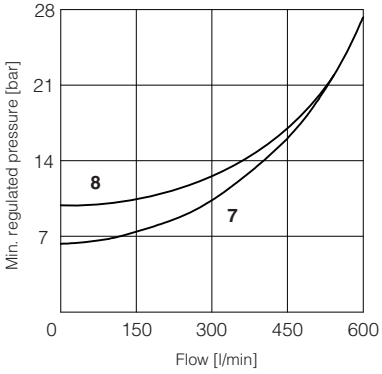

15 HYDRAULIC OPTIONS

E = External pilot option to be selected when the pilot pressure is supplied from a different line respect to the P main line.
With option E the internal connection between port P and X of the valve is plugged.
The pilot pressure must be connected to the X port available on the valve's mounting surface or on main body (threaded pipe connection G ¼").

Y = The external drain is mandatory in case the main line T is subjected to pressure peaks or it is pressurized.
The Y drain port has a threaded connection G ¼" available on the pilot stage body.

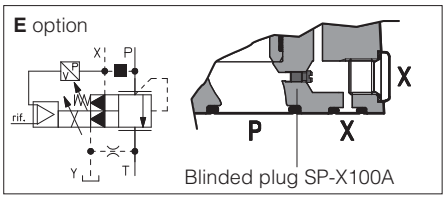

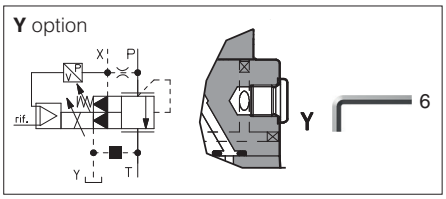

16 ELECTRONIC OPTIONS - only for **REB-NP** and **RES**

I = This option provides 4 ÷ 20 mA current reference and monitor signals, instead of the standard 0 ÷ 10 VDC. Input signal can be reconfigured via software selecting between voltage and current, within a maximum range of ±10 VDC or ±20 mA.
It is normally used in case of long distance between the machine control unit and the valve or where the reference signal can be affected by electrical noise; the valve functioning is disabled in case of reference signal cable breakage.

Q = This option permits to inhibit the valve function without removing the power supply to the driver. Upon disable command the current to the solenoid is zeroed and the valve's spool moves to rest position.
The option /Q is suggested for all cases where the valve has to be frequently inhibited during the machine cycle – see 21.5 for signal specifications.

Z = This option provides, on the 12 pin main connector, the following additional features:
Fault output signal - see 21.6
Enable input signal - see above option /Q
Power supply for driver's logics and communication - see 21.2

17 POSSIBLE COMBINED OPTIONS

Hydraulic options: all combination possible
Electronic options: /IQ, /IZ

Note: **/T** Bluetooth adapter option can be combined with all other options

18 MECHANICAL PRESSURE LIMITER

The AGMZO are provided with mechanical pressure limiter acting as protection against overpressure. For safety reasons the factory setting of the mechanical pressure limiter is fully unloaded (min pressure). At the first commissioning it must be set at a value lightly higher than the max pressure regulated with the proportional control.
For the pressure setting of the mechanical pressure limiter, proceed according to following steps:

- apply the max reference input signal to the valve's driver. The system pressure will not increase until the mechanical pressure limiter remains unloaded.
- turn clockwise the adjustment screw ① until the system pressure will increase up to a stable value corresponding to the pressure setpoint at max reference input signal.
- turn clockwise the adjustment screw ① of additional 1 or 2 turns to ensure that the mechanical pressure limiter remains closed during the proportional valve working.

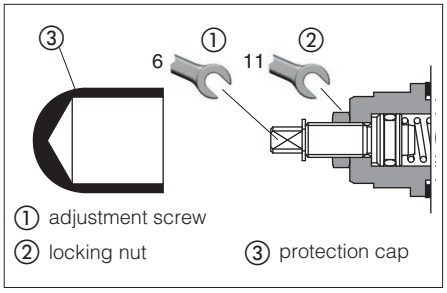

19 REMOTE PRESSURE UNLOADING

The **P** main line can be remotely unloaded by connecting the valve X port to a solenoid valve as shown in the below scheme (venting valve).
This function can be used in emergency to unload the system pressure by-passing the proportional control.

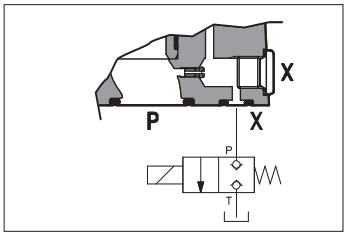

20 AIR BLEEDING

At the first valve commissioning the air eventually trapped inside the solenoid must be bled-off through the screw ① located at the rear side of the solenoid housing.
The presence of air may cause pressure instability and vibrations.

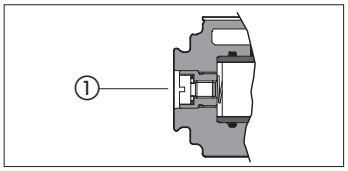

21 POWER SUPPLY AND SIGNALS SPECIFICATIONS - only for **REB-NP** and **RES**

Generic electrical output signals of the valve (e.g. fault or monitor signals) must not be directly used to activate safety functions, like to switch-ON/OFF the machine's safety components, as prescribed by the European standards (Safety requirements of fluid technology systems and components-hydraulics, ISO 4413).

For **REB-IL** signals see section 22

21.1 Power supply (V+ and V0)

The power supply must be appropriately stabilized or rectified and filtered: apply at least a 10000 μF/40 V capacitance to single phase rectifiers or a 4700 μF/40 V capacitance to three phase rectifiers. In case of separate power supply see 21.2.

⚠ A safety fuse is required in series to each power supply: 2,5 A time lag fuse.

21.2 Power supply for driver's logic and communication (VL+ and VL0) - only for **/Z** option

The power supply for driver's logic and communication must be appropriately stabilized or rectified and filtered: apply at least a 10000 μF/40 V capacitance to single phase rectifiers or a 4700 μF/40 V capacitance to three phase rectifiers.
The separate power supply for driver's logic on pin 9 and 10, allow to remove solenoid power supply from pin 1 and 2 maintaining active the diagnostics, USB and fieldbus communications.

⚠ A safety fuse is required in series to each driver's logic and communication power supply: 500 mA fast fuse.

21.3 Pressure reference input signal (P_INPUT+)

The driver controls in closed loop the current to the valve pressure proportionally to the external reference input signal.
Reference input signal is factory preset according to selected valve code, defaults are 0 ÷ 10 VDC for standard and 4 ÷ 20 mA for /I option.
Input signal can be reconfigured via software selecting between voltage and current, within a maximum range of ±10 VDC or ± 20 mA.
Drivers with fieldbus interface (BC, BP, EH) can be software set to receive reference signal directly by the machine control unit (fieldbus reference).
Analog reference input signal can be used as on-off commands with input range 0 ÷ 24 VDC.

21.4 Pressure monitor output signal (P_MONITOR)

The driver generates an analog output signal proportional to the actual pressure of the valve; the monitor output signal can be software set to show other signals available in the driver (e.g. analog reference, fieldbus reference).
Monitor output signal is factory preset according to selected valve code, defaults settings are 0 ÷10 VDC for standard and 4 ÷ 20 mA for /I option.
Output signal can be reconfigured via software selecting between voltage and current, within a maximum range of 0 ÷10 VDC or 0 ÷ 20 mA.

21.5 Enable input signal (ENABLE) - not for standard

To enable the driver, supply a 24 VDC on pin 3 (pin C): Enable input signal allows to enable/disable the current supply to the solenoid, without removing the electrical power supply to the driver; it is used to active the communication and the other driver functions when the valve must be disabled for safety reasons. This condition **does not comply** with norms IEC 61508 and ISO 13849.
Enable input signal can be used as generic digital input by software selection.

21.6 Fault output signal (FAULT) - only for **/Z** option

Fault output signal indicates fault conditions of the driver (solenoid short circuits/not connected, reference signal broken for 4 ÷ 20 mA input, etc.).
Fault presence corresponds to 0 VDC, normal working corresponds to 24 VDC. Fault status is not affected by the Enable input signal.

22 IO-LINK SIGNALS SPECIFICATIONS - only for **REB-IL**

22.1 Power supply for IO-Link communication (L+ and L-)

The IO-Link master provides dedicated 24 VDC power supply for IO-Link communication.
Maximum power consumption: 2 W
Internal electrical isolation of power L+, L- from P24, N24

22.2 Power supply for driver's logic and valve regulation (P24 and N24)

The IO-Link master provides dedicated 24 VDC power supply for valve regulation, logics and diagnostics.
Maximum power consumption: 50 W
Internal electrical isolation of power P24, N24 from L+, L-

22.3 IO-Link data line (C/Q)

C/Q signal is used to establish communication between IO-Link master and valve.

23 ELECTRONIC CONNECTIONS

23.1 Main connector signals - 7 pin (A1) Standard and /Q option - for REB-NP and RES

PIN	Standard	/Q	TECHNICAL SPECIFICATIONS	NOTES
A	**V+**		Power supply 24 VDC	Input - power supply
B	**V0**		Power supply 0 VDC	Gnd - power supply
C	**AGND**		Analog ground	Gnd - analog signal
		ENABLE	Enable (24 VDC) or disable (0 VDC) the driver, referred to V0	Input - on/off signal
D	**P_INPUT+**		Pressure reference input signal: ±10 VDC / ±20 mA maximum range Defaults are 0 ÷ 10 VDC for standard and 4 ÷ 20 mA for /I option	Input - analog signal **Software selectable**
E	**INPUT-**		Negative reference input signal for P_INPUT+	Input - analog signal
F	**P_MONITOR** referred to: AGND	V0	Pressure monitor output signal: 0 ÷ 10 VDC / 0 ÷ 20 mA maximum range Defaults are 0 ÷ 10 VDC for standard and 4 ÷ 20 mA for /I option	Output - analog signal **Software selectable**
G	**EARTH**		Internally connected to driver housing	

23.2 Main connector signals - 12 pin (A2) /Z option - for REB-NP and RES

PIN	/Z	TECHNICAL SPECIFICATIONS	NOTES
1	**V+**	Power supply 24 VDC	Input - power supply
2	**V0**	Power supply 0 VDC	Gnd - power supply
3	**ENABLE**	Enable (24 VDC) or disable (0 VDC) the driver, referred to VL0	Input - on/off signal
4	**P_INPUT+**	Pressure reference input signal: ±10 VDC / ±20 mA maximum range Defaults are 0 ÷ 10 VDC for standard and 4 ÷ 20 mA for /I option	Input - analog signal **Software selectable**
5	**INPUT-**	Negative reference input signal for INPUT+	Input - analog signal
6	**P_MONITOR**	Pressure monitor output signal: 0 ÷ 10 VDC / 0 ÷ 20 mA maximum range, referred to VL0 Defaults are 0 ÷ 10 VDC for standard and 4 ÷ 20 mA for /I option	Output - analog signal **Software selectable**
7	**NC**	Do not connect	
8	**NC**	Do not connect	
9	**VL+**	Power supply 24 VDC for driver's logic and communication	Input - power supply
10	**VL0**	Power supply 0 VDC for driver's logic and communication	Gnd - power supply
11	**FAULT**	Fault (0 VDC) or normal working (24 VDC), referred to VL0	Output - on/off signal
PE	**EARTH**	Internally connected to driver housing	

Note: do not disconnect VL0 before VL+ when the driver is connected to PC USB port

23.3 IO-Link connector signals - M12 - 5 pin - Coding A, port class B (A) only for REB-IL

PIN	SIGNAL	TECHNICAL SPECIFICATIONS	NOTES
1	**L+**	Power supply 24 VDC for IO-Link communication	Input - power supply
2	**P24**	Power supply 24 VDC for valve regulation, logics and diagnostics	Input - power supply
3	**L-**	Power supply 0 VDC for IO-Link communication	Gnd - power supply
4	**C/Q**	IO-Link data line	Input / Output - signal
5	**N24**	Power supply 0 VDC for valve regulation, logics and diagnostics	Gnd - power supply

Note: L+, L- and P24, N24 are electrically isolated

23.4 Communication connectors - for REB (B) and RES (B) - (C)

(B) **USB connector - M12 - 5 pin** always present		
PIN	**SIGNAL**	**TECHNICAL SPECIFICATION (1)**
1	**+5V_USB**	Power supply
2	**ID**	Identification
3	**GND_USB**	Signal zero data line
4	**D-**	Data line -
5	**D+**	Data line +

(C1) **BC fieldbus execution, connector - M12 - 5 pin (2)**		
PIN	**SIGNAL**	**TECHNICAL SPECIFICATION (1)**
1	**CAN_SHLD**	Shield
2	**NC**	do not connect
3	**CAN_GND**	Signal zero data line
4	**CAN_H**	Bus line (high)
5	**CAN_L**	Bus line (low)

(C2) **BP fieldbus execution, connector - M12 - 5 pin (2)**		
PIN	**SIGNAL**	**TECHNICAL SPECIFICATION (1)**
1	**+5V**	Termination supply signal
2	**LINE-A**	Bus line (high)
3	**DGND**	Data line and termination signal zero
4	**LINE-B**	Bus line (low)
5	**SHIELD**	

(C3) (C4) **EH fieldbus execution, connector - M12 - 4 pin (2)**		
PIN	**SIGNAL**	**TECHNICAL SPECIFICATION (1)**
1	**TX+**	Transmitter
2	**RX+**	Receiver
3	**TX-**	Transmitter
4	**RX-**	Receiver
Housing	**SHIELD**	

(1) Shield connection on connector's housing is recommended

(2) Only for **RES** execution

23.5 Solenoid connection - only for R

PIN	SIGNAL	TECHNICAL SPECIFICATION	Connector code 666
1	**COIL**	Power supply	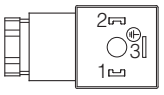
2	**COIL**	Power supply	
3	**GND**	Ground	

23.6 Pressure transducer connection - only for R

PIN	SIGNAL	TECHNICAL SPECIFICATION	Connector code ZBE-08
1	**V+**	Power supply	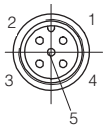
2	**NC**	Not connected	
3	**TR**	Output signal 4 ÷ 20 mA	
4	**NC**	Not connected	
5	**NC**	Not connected	

23.7 REB-NP connections layout

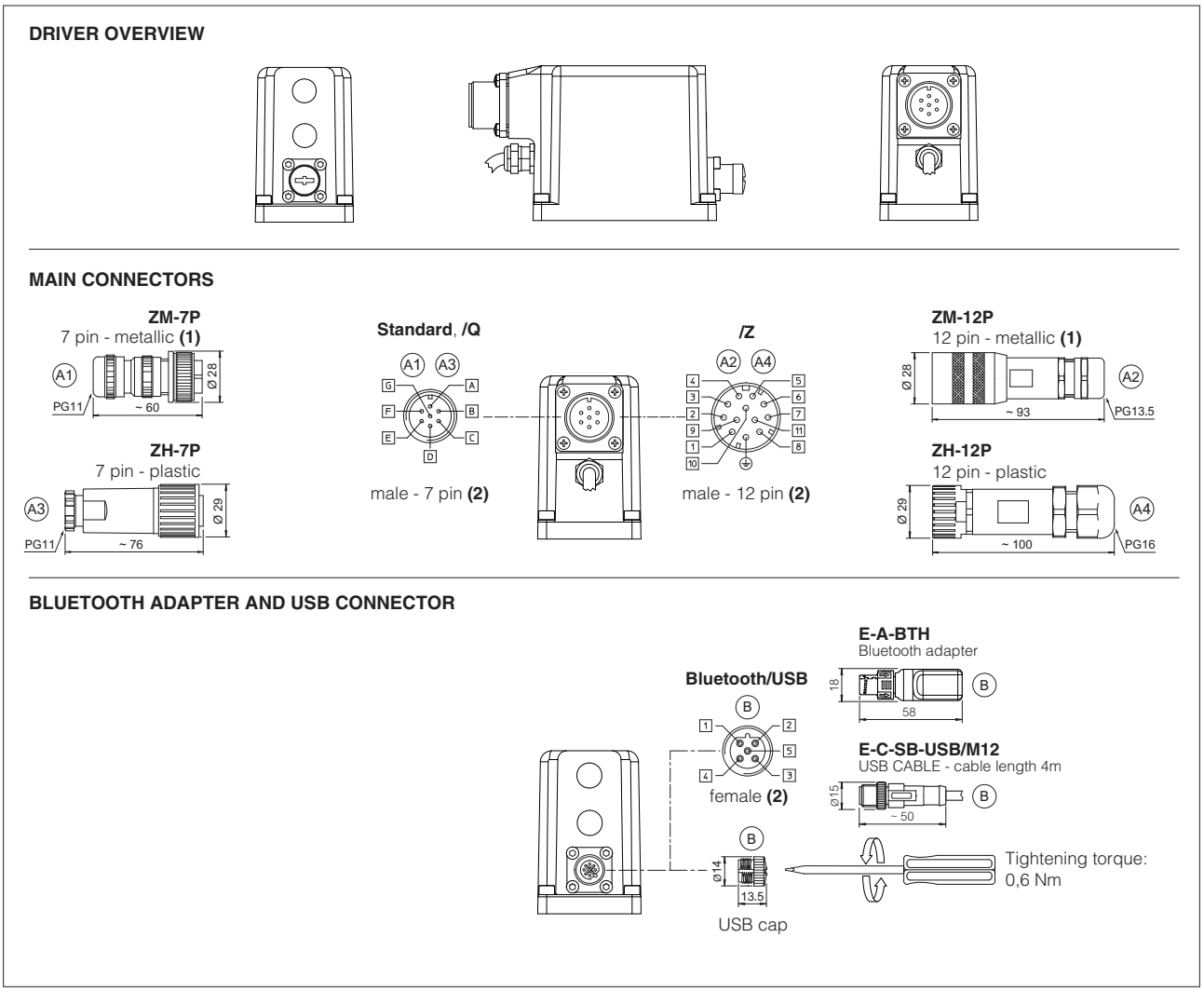

(1) Use of metallic connectors is strongly recommended in order to fulfill EMC requirements **(2)** Pin layout always referred to driver's view

23.8 REB-IL connections layout

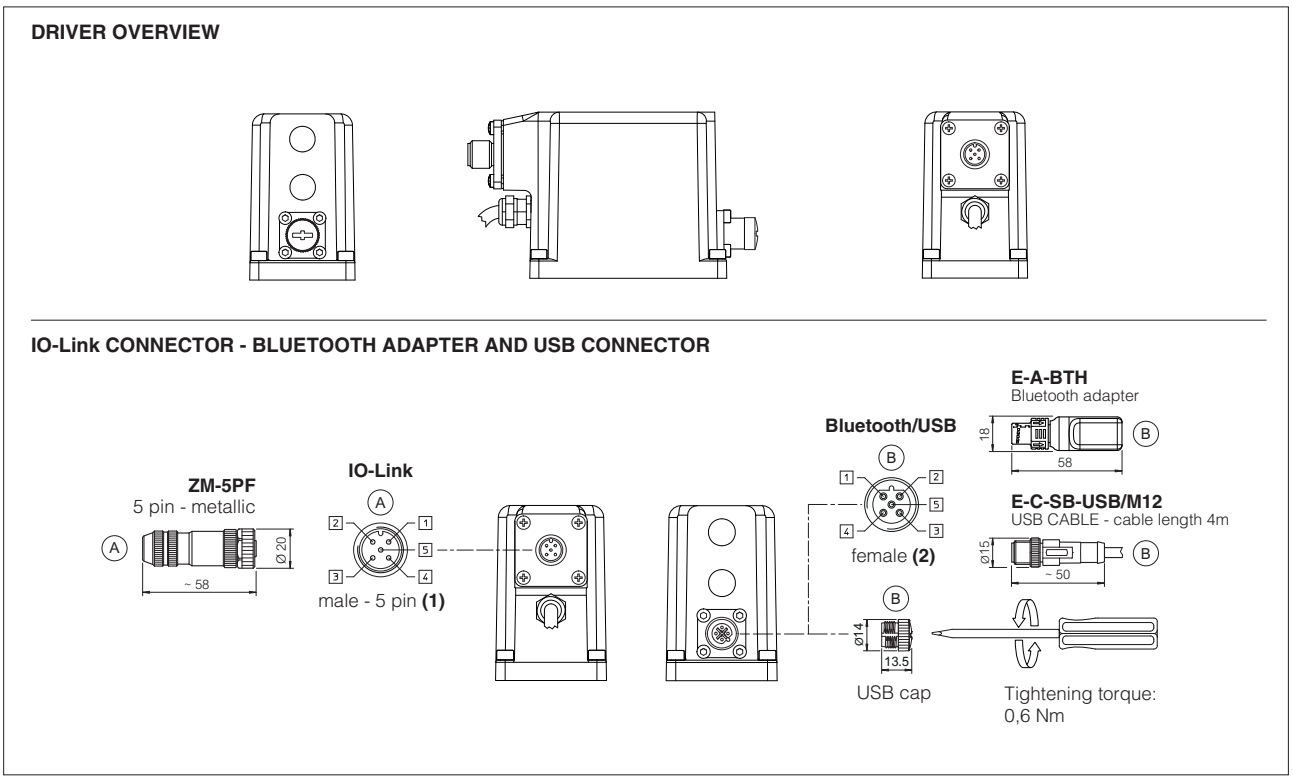

(1) Use of metallic connectors is strongly recommended in order to fulfill EMC requirements **(2)** Pin layout always referred to driver's view

23.9 RES connections layout

DRIVER OVERVIEW

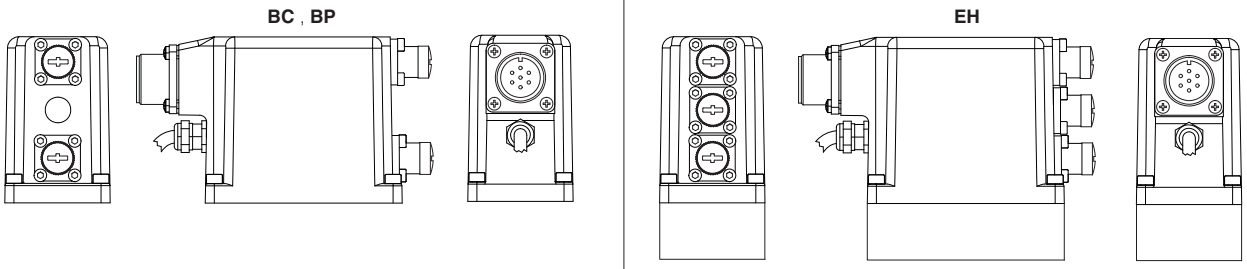

MAIN CONNECTORS

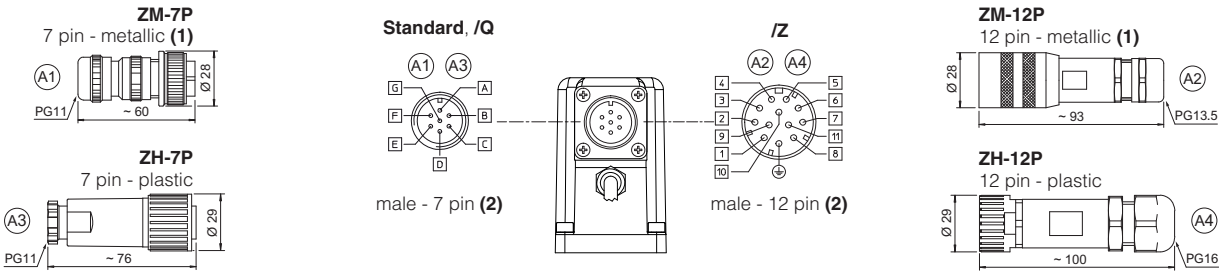

FIELDBUS CONNECTORS

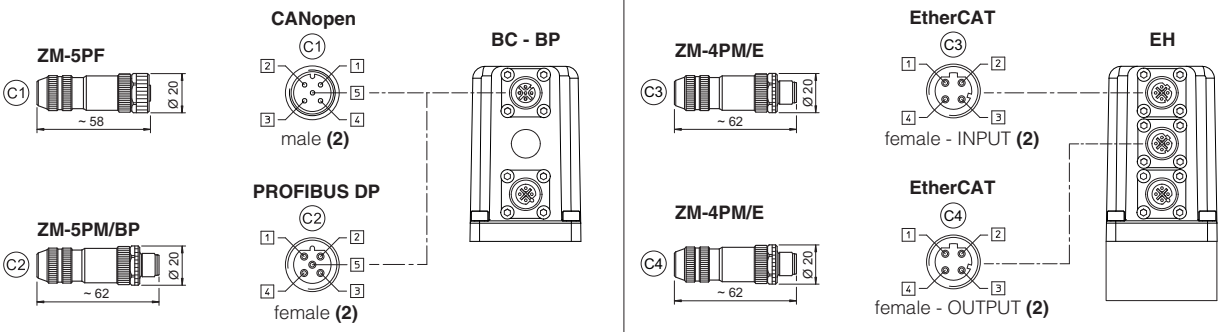

BLUETOOTH ADAPTER AND USB CONNECTOR

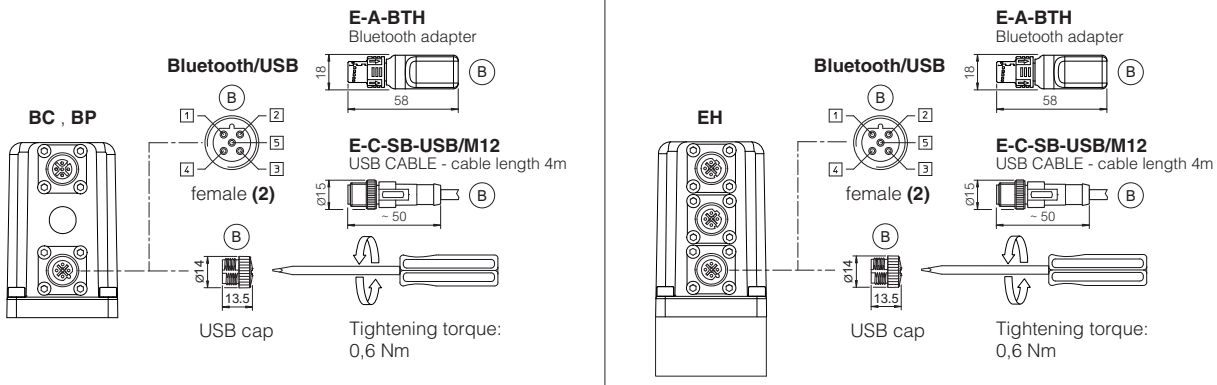

(1) Use of metallic connectors is strongly recommended in order to fulfill EMC requirements **(2)** Pin layout always referred to driver's view

24 CONNECTORS CHARACTERISTICS - to be ordered separately

24.1 Main connectors - 7 pin - for REB-NP and RES

CONNECTOR TYPE	POWER SUPPLY AND SIGNALS	POWER SUPPLY AND SIGNALS
CODE	(A1) ZM-7P	(A3) ZH-7P
Type	7pin female straight circular	7pin female straight circular
Standard	According to MIL-C-5015	According to MIL-C-5015
Material	Metallic	Plastic reinforced with fiber glass
Cable gland	PG11	PG11
Recommended cable	LiYCY 7 x 0,75 mm^2 max 20 m (logic and power supply) or LiYCY 7 x 1 mm^2 max 40 m (logic and power supply)	LiYCY 7 x 0,75 mm^2 max 20 m (logic and power supply) or LiYCY 7 x 1 mm^2 max 40 m (logic and power supply)
Conductor size	up to 1 mm^2 - available for 7 wires	up to 1 mm^2 - available for 7 wires
Connection type	to solder	to solder
Protection (EN 60529)	IP 67	IP 67

24.2 Main connectors - 12 pin - for REB-NP and RES

CONNECTOR TYPE	POWER SUPPLY AND SIGNALS	POWER SUPPLY AND SIGNALS
CODE	(A2) ZM-12P	(A4) ZH-12P
Type	12pin female straight circular	12pin female straight circular
Standard	DIN 43651	DIN 43651
Material	Metallic	Plastic reinforced with fiber glass
Cable gland	PG13,5	PG16
Recommended cable	LiYCY 12 x 0,75 mm^2 max 20 m (logic and power supply)	LiYCY 10 x 0,14mm^2 max 40 m (logic) LiYY 3 x 1mm^2 max 40 m (power supply)
Conductor size	0,5 mm^2 to 1,5 mm^2 - available for 12 wires	0,14 mm^2 to 0,5 mm^2 - available for 9 wires 0,5 mm^2 to 1,5 mm^2 - available for 3 wires
Connection type	to crimp	to crimp
Protection (EN 60529)	IP 67	IP 67

24.3 IO-Link connector - only for REB-IL

CONNECTOR TYPE	IL IO-Link
CODE	(A) ZM-5PF
Type	5pin female straight circular
Standard	M12 coding A – IEC 61076-2-101
Material	Metallic
Cable gland	Pressure nut - cable diameter 6÷8 mm
Recommended cable	5 x 0,75 mm^2 max 20 m
Connection type	screw terminal
Protection (EN 60529)	IP 67

24.4 Fieldbus communication connectors - only for RES

CONNECTOR TYPE	BC CANopen (1)		BP PROFIBUS DP (1)		EH EtherCAT (2)
CODE	(C1) ZM-5PF	(C2) ZM-5PM	(C1) ZM-5PF/BP	(C2) ZM-5PM/BP	(C1) (C2) ZM-4PM/E
Type	5 pin female straight circular	5 pin male straight circular	5 pin female straight circular	5 pin male straight circular	4 pin male straight circular
Standard	M12 coding A – IEC 61076-2-101		M12 coding B – IEC 61076-2-101		M12 coding D – IEC 61076-2-101
Material	Metallic		Metallic		Metallic
Cable gland	Pressure nut - cable diameter 6÷8 mm		Pressure nut - cable diameter 6÷8 mm		Pressure nut - cable diameter 4÷8 mm
Cable	CANbus Standard (DR 303-1)		PROFIBUS DP Standard		Ethernet standard CAT-5
Connection type	screw terminal		screw terminal		terminal block
Protection (EN 60529)	IP67		IP 67		IP 67

(1) E-TRM-** terminators can be ordered separately - see tech table **GS500**

(2) Internally terminated

25 FASTENING BOLTS AND SEALS

	AGMZO-*-10	AGMZO-*-20	AGMZO-*-32
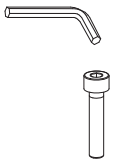	**Fastening bolts:** 4 socket head screws M12x35 class 12.9 Tightening torque = 125 Nm	**Fastening bolts:** 4 socket head screws M16x50 class 12.9 Tightening torque = 300 Nm	**Fastening bolts:** 4 socket head screws M20x60 class 12.9 Tightening torque = 600 Nm
	Seals: 2 OR 123 Diameter of ports P, T: Ø 14 mm 1 OR 109/70 Diameter of port X: Ø 3,2 mm	**Seals:** 2 OR 4112 Diameter of ports P, T: Ø 24 mm 1 OR 109/70 Diameter of port X: Ø 3,2 mm	**Seals:** 2 OR 4131 Diameter of ports P, T: Ø 28 mm 1 OR 109/70 Diameter of port X: Ø 3,2 mm

SIZE 10

ISO 6264: 2007
Mounting surface: 6264-06-09-1-97
(see table P005)

	Mass [kg]		
	R	REB, RES	RES-EH
AGMZO-*-10	5,7	6,2	6,3

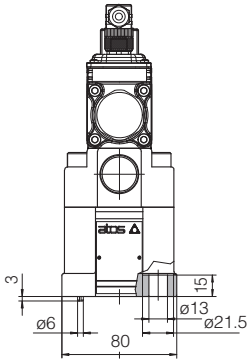

AGMZO-R-P-10

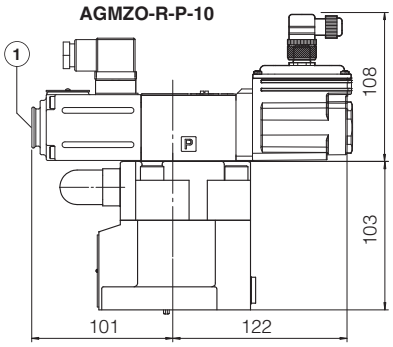

AGMZO-REB-P-NP-10
AGMZO-REB-P-IL-10
AGMZO-RES-P-BC-10
AGMZO-RES-P-BP-10

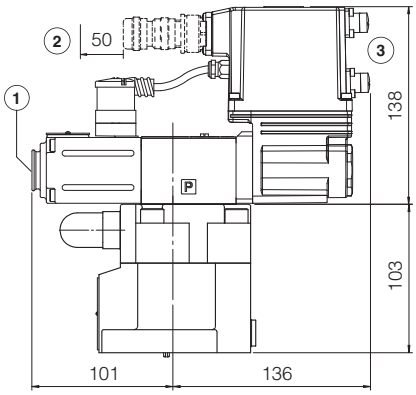

AGMZO-RES-P-EH-10

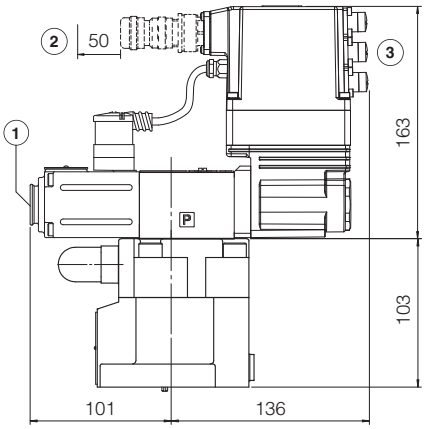

SIZE 20

ISO 6264: 2007
Mounting surface: 6264-08-13-1-97
(see table P005)

	Mass [kg]		
	R	REB, RES	RES-EH
AGMZO-*-20	6,9	7,4	7,5

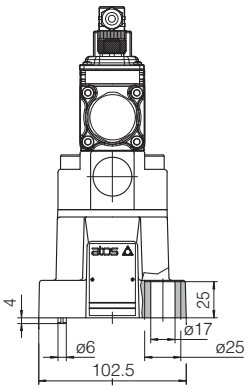

AGMZO-R-P-20

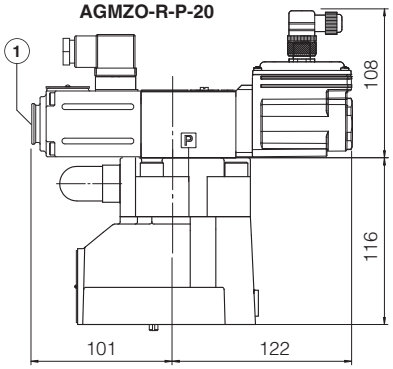

AGMZO-REB-P-NP-20
AGMZO-REB-P-IL-20
AGMZO-RES-P-BC-20
AGMZO-RES-P-BP-20

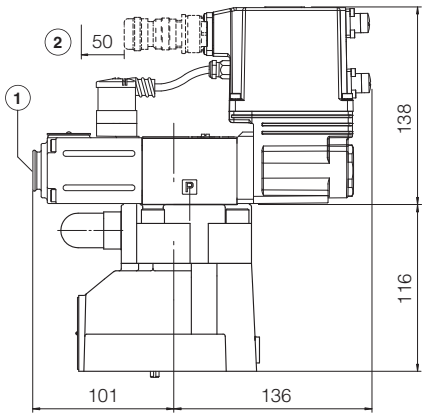

AGMZO-RES-P-EH-20

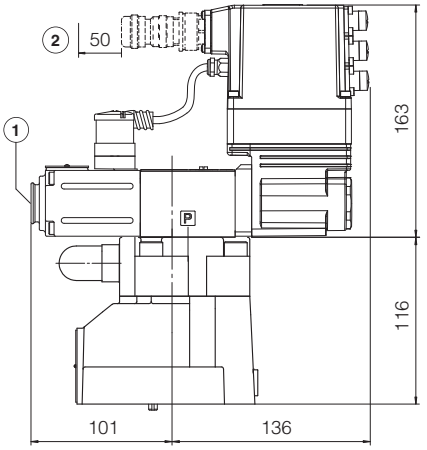

(1) = Air bleeding, see section 20

(2) = Space required for connection cable and for connector removal

(3) = The dimensions of connectors and Bluetooth adapter must be considered, see section 23.7, 23.8 and 23.9

SIZE 32

ISO 6264: 2007
Mounting surface: 6264-10-17-1-97
(see table P005)
(with M20 fixing holes instead of standard M18)

	Mass [kg]		
	R	**REB, AES**	**RES-EH**
AGMZO-*-32	8,3	8,8	8,9

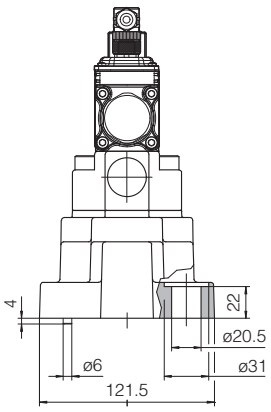

AGMZO-R-P-32

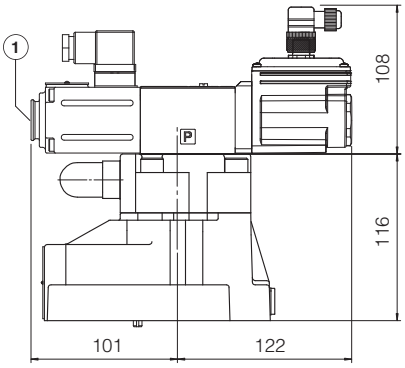

AGMZO-REB-P-NP-32
AGMZO-REB-P-IL-32
AGMZO-RES-P-BC-32
AGMZO-RES-P-BP-32

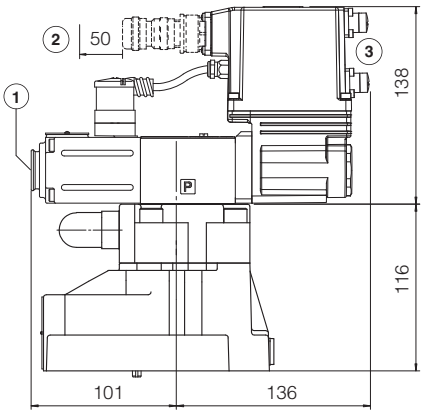

AGMZO-RES-P-EH-32

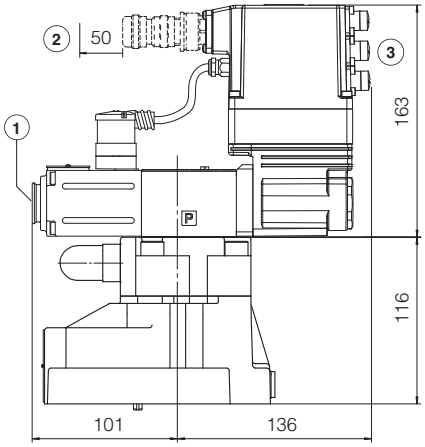

(1) = Air bleeding, see section 20

(2) = Space required for connection cable and for connector removal

(3) = The dimensions of connectors and Bluetooth adapter must be considered, see section 23.7, 23.8 and 23.9

27 RELATED DOCUMENTATION

FS001	Basics for digital electrohydraulics	**P005**	Mounting surfaces for electrohydraulic valves
FS900	Operating and maintenance information for proportional valves	**QB400**	Quickstart for REB valves commissioning
GS203	E-BM-RES digital driver	**QF400**	Quickstart for RES valves commissioning
GS500	Programming tools	**E-MAN-BM-RES**	E-BM-RES user manual (off-board)
GS510	Fieldbus	**E-MAN-RI-REB**	REB user manual
GS520	IO-Link interface	**E-MAN-RI-RES**	RES user manual
K800	Electric and electronic connectors		

Digital proportional reducing valves high performance

direct, with on-board pressure transducer

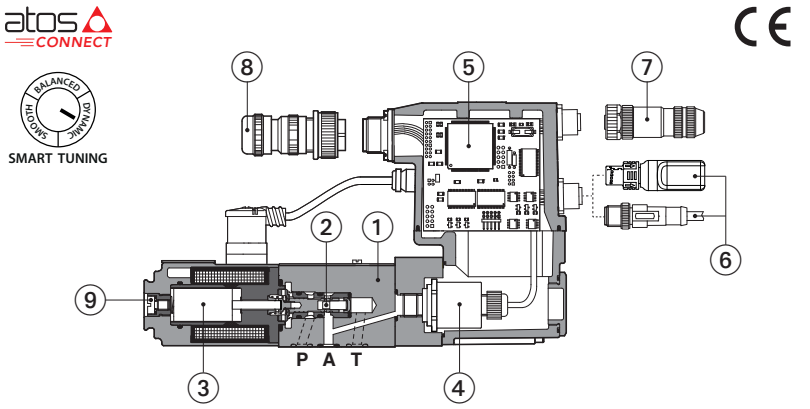

RZGO-RES-P-BC-010

① Valve body
② Poppet
③ Proportional solenoid
④ On-board pressure transducer
⑤ On-board digital driver
⑥ Bluetooth/USB connection
⑦ Fieldbus connector
⑧ Main connector
⑨ Screw for air blending

RZGO-R , RZGO-REB, RZGO-RES

Spool type, direct, digital proportional reducing valves with on-board pressure transducer for pressure closed loop controls.

R to be coupled with off-board driver.

REB basic execution, with on-board digital driver, with analog reference signal or IO-Link interface for digital reference signal, valve settings, and real-time diagnostics.

RES full execution, with on-board digital driver which includes also fieldbus interfaces for digital reference signal, valve settings, and real-time diagnostics.

For **REB** and **RES**, Bluetooth/USB connection is always present for valve settings via mobile App and Atos PC software.

Size: **06** - ISO 4401
Max flow: **12 l/min**
Max pressure: **350 bar**

1 MODEL CODE

RZGO - REB - P - NP - 010 / 210 / * / * * / *

RZGO: Proportional pressure reducing valve, direct

REB:
R = off-board driver, see section 3
REB = basic on-board digital driver
RES = full on-board digital driver

P = with on-board pressure transducer

NP:
IO-Link interface, only for REB, see section 8 :
NP = Not present **IL** = IO-Link
Fieldbus interfaces, only for RES, see section 9 :
BC = CANopen **EH** = EtherCAT
BP = PROFIBUS DP

010:
Configuration:
010 = regulation on port A, discharge in T (direct operated version)

210:
Max regulated pressure:
32 = 32 bar **100** = 100 bar **210**= 210 bar

*****:
Electronic options, only for **REB-NP** and **RES (1)**:
I = current reference input and monitor 4÷20 mA
Q = enable signal
Z = double power supply, enable, fault and monitor signals -12 pin connector

*****:
Bluetooth option, only for **REB** and **RES (1)**, see section 6 :
T = Bluetooth adapter supplied with the valve

*****: Series number

*****:
Seals material, see section 13 :
- = NBR
PE = FKM
BT = NBR low temp.

(1) Possible combined options: IQ, IZ (/T Bluetooth adapter option can be combined with all other options)

2 HYDRAULIC SYMBOLS

RZGO-R

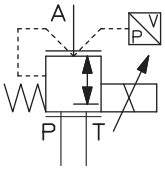

RZGO-REB RZGO-RES

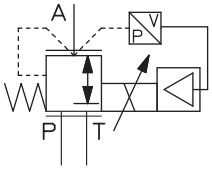

3 OFF-BOARD ELECTRONIC DRIVER - only for **R**

Drivers model	E-BM-RES
Type	Digital
Format	DIN rail panel format
Tech table	GS203

4 GENERAL NOTES

Atos digital proportionals valves are CE marked according to the applicable directives (e.g. Immunity and Emission EMC Directive).
Installation, wirings and start-up procedures must be performed according to the general prescriptions shown in tech table **FS900** and in the user manuals included in the E-SW-SETUP programming software.

5 VALVE SETTINGS AND PROGRAMMING TOOLS - see tech. table **GS500**

5.1 Atos CONNECT mobile App

Free downloadable App for smartphones and tablets which allows quick access to valve main functional parameters and basic diagnostic information via Bluetooth, thus avoiding physical cable connection and significantly reducing commissioning time.
Atos CONNECT supports Atos digital valve drivers equipped with E-A-BTH adapter or with built-in Bluetooth. It does not support valves with p/Q control or axis controls.

Download on the App Store

GET IT ON Google Play

5.2 E-SW-SETUP PC software

Free downloadable software for PC allows to set all valve functional parameters and to access complete diagnostic information of digital valve drivers via Bluetooth/USB service port.
Atos E-SW-SETUP PC software supports all Atos digital valve drivers and it is available at www.atos.com in MyAtos area.

WARNING: drivers USB port is not isolated! For E-C-SB-USB/M12 cable, the use of E-A-SB-USB/OPT isolator adapter is highly recommended for PC protection

Bluetooth or USB connection

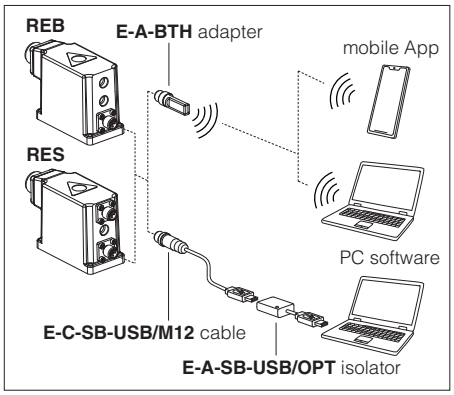

6 BLUETOOTH OPTION - see tech. table **GS500**

T option adds Bluetooth® connectivity to Atos valve drivers thanks to E-A-BTH adapter, which can be left permanently installed on-board, to allow the Bluetooth connection with the valve drivers at any time. E-A-BTH adapter can also be purchased separately and used to connect with any supported Atos digital product.
Bluetooth connection to the valve can be protected against unauthorised access by setting a personal password. The adapter leds visually indicates the status of valve driver and Bluetooth connection.

WARNING: for the list of countries where the Bluetooth adapter has been approved, see tech. table **GS500**
T option is not available for the Indian market, so the Bluetooth adapter must be ordered separately.

7 SMART TUNING

Smart tuning allows to adjust the valve dynamic response in order to match different hydraulic conditions and performance requirements.

The valve is provided with 3 factory settings for the pressure control:

- **dynamic** fast response time for best dynamic performances. Default factory setting for pressure valves
- **balanced** average response time suitable for major applications
- **smooth** attenuated response time for slow regulation without overshoots

Smart tuning setting can be switched from Dynamic (default) to Balanced or Smooth via software or fieldbus; if requested, performances can be further customized directly tuning each single control parameter. For details consult related manuals E-MAN-* and Quickstart, see section 24.

Below indications have to be considered as a general guideline, being affected by hydraulic circuit stiffness, working flow and dead volume.

High stiffness - Low flow - Small volume

1 = dynamic
2 = balanced
3 = smooth

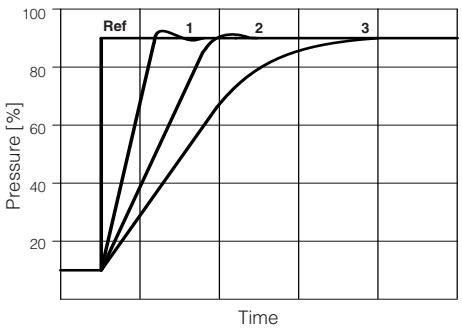

Low stiffness - High flow - Large volume

1 = dynamic
2 = balanced
3 = smooth

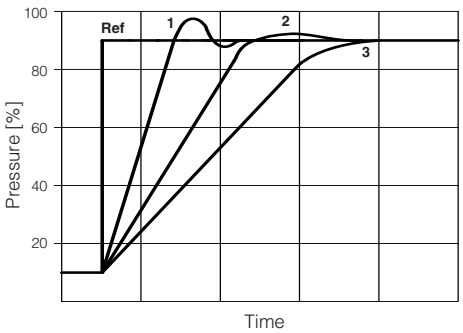

8 IO-LINK - only for **REB**, see tech. table **GS520**

IO-Link allows low cost digital communication between the valve and machine central unit. The valve is directly connected to a port of an IO-Link master (point-to-point connection) via low-cost unshielded cables for digital reference, diagnostic and settings. The IO-Link master works as a hub exchanging this information with the machine central unit via fieldbus.

9 FIELDBUS - only for **RES**, see tech. table **GS510**

Fieldbus allows valve direct communication with machine control unit for digital reference, valve diagnostics and settings. These execution allow to operate the valves through fieldbus or analog signals available on the main connector.

10 GENERAL CHARACTERISTICS

Assembly position	Any position
Subplate surface finishing to ISO 4401	Acceptable roughness index: Ra ≤ 0,8, recommended Ra 0,4 – Flatness ratio 0,01/100
MTTFd valves according to EN ISO 13849	150 years, for further details see technical table P007
Ambient temperature range	**R:** **Standard** = -20°C ÷ +70°C **/PE** option = -20°C ÷ +70°C **/BT** option = -40°C ÷ +60°C **REB, RES:** **Standard** = -20°C ÷ +60°C **/PE** option = -20°C ÷ +60°C **/BT** option = -40°C ÷ +60°C
Storage temperature range	**R:** **Standard** = -20°C ÷ +80°C **/PE** option = -20°C ÷ +80°C **/BT** option = -40°C ÷ +70°C **REB, RES:** **Standard** = -20°C ÷ +70°C **/PE** option = -20°C ÷ +70°C **/BT** option = -40°C ÷ +70°C
Surface protection	Zinc coating with black passivation, galvanic treatment (driver housing for REB and RES)
Corrosion resistance	Salt spray test (EN ISO 9227) > 200 h
Vibration resistance	See technical table G004 (for REB and RES)
Compliance	CE according to EMC directive 2014/30/EU (Immunity: EN 61000-6-2; Emission: EN 61000-6-3) RoHS Directive 2011/65/EU as last update by 2015/863/EU REACH Regulation (EC) n°1907/2006

11 HYDRAULIC CHARACTERISTICS - based on mineral oil ISO VG 46 at 50 °C

Valve model		**RZGO-*-010**
Max regulated pressure	[bar]	32; 100; 210
Max pressure at port P	[bar]	350
Max pressure at port T	[bar]	210
Min regulated pressure **(1)**	[bar]	0,8
Max flow	[l/min]	12
Response time 0-100% step signal (depending on installation) **(2)**	[ms]	≤ 40
Hysteresis		≤ 0,3 [% of max pressure]
Linearity		≤ 1,0 [% of max pressure]
Repeatability		≤ 0,2 [% of max pressure]
Thermal drift		zero point displacement < 1% at ΔT = 40°C

Note: above performance data refer to valves coupled with Atos electronic drivers, see section 3

(1) Min pressure value to be increased of T line pressure

(2) Average response time value; the pressure variation in consequence of a modification of the reference input signal to the valve is affected by the stiffness of the hydraulic circuit: greater is the stiffness of the circuit, faster is the dynamic response, see section 7

12 ELECTRICAL CHARACTERISTICS

Power supplies	Nominal : +24 VDC Rectified and filtered : VRMS = 20 ÷ 32 VMAX (ripple max 10 % VPP)				
Max power consumption	**R** = 30 W **REB**, **RES** = 50 W				
Max. solenoid current	3 A				
Coil resistance R at 20°C	3 ÷ 3,3 Ω				
Analog input signals	Voltage: range ±10 VDC (24 VMAX tolerant) Input impedance: Ri > 50 kΩ Current: range ±20 mA Input impedance: Ri = 500 Ω				
Monitor output	Voltage: maximum range 0 ÷ 10 VDC @ max 5 mA Current: maximum range 0 ÷ 20 mA @ max 500 Ω load resistance				
Enable input	Range: 0 ÷ 9 VDC (OFF state), 15 ÷ 24 VDC (ON state), 9 ÷ 15 VDC (not accepted); Input impedance: Ri > 87 kΩ				
Fault output	Output range : 0 ÷ 24 VDC (ON state ≅ VL+ [logic power supply] ; OFF state ≅ 0 V) @ max 50 mA; external negative voltage not allowed (e.g. due to inductive loads)				
Pressure transducer **(1)**	E-ATR-8/*/I Output signal: 4 ÷ 20 mA (see tech table **GS465**)				
Alarms	Solenoid not connected/short circuit, cable break with current reference signal, over/under temperature, current control monitoring, power supplies level, pressure transducer failure				
Insulation class	H (180°) Due to the occurring surface temperatures of the solenoid coils, the European standards ISO 13732-1 and EN982 must be taken into account				
Protection degree to DIN EN60529	**R** = IP65; **REB**, **RES** = IP66 / IP67 with mating connectors				
Duty factor	Continuous rating (ED=100%)				
Tropicalization	Tropical coating on electronics PCB				
Additional characteristics	Short circuit protection of solenoid's current supply; current control by P.I.D. with rapid solenoid switching; protection against reverse polarity of power supply				
Communication interface	USB Atos ASCII coding	IO-Link Interface and System Specification 1.1.3	CANopen EN50325-4 + DS408	PROFIBUS DP EN50170-2/IEC61158	EtherCAT IEC 61158
Communication physical layer	not insulated USB 2.0+USB OTG	SDCI class port B	optical insulated CAN ISO11898	optical insulated RS485	Fast Ethernet, insulated 100 Base TX
Recommended wiring cable	LiYCY shielded cables, see section 21				

(1) In case of pressure transducer failure, the valve's reaction can be configured through Atos E-SW-SETUP software to:
- cut off the current to solenoid, therefore the regulated pressure will be reduced to minimum value (default setting)
- automatically switch the pressure control from closed loop (dynamic, balanced, smooth) to open loop, to let the valve to temporarily operate with reduced regulation accuracy

Note: a maximum time of 500 ms (depending on communication type) has to be considered between the driver energizing with the 24 VDC power supply and when the valve is ready to operate. During this time the current to the valve coils is switched to zero.

13 SEALS AND HYDRAULIC FLUIDS - for other fluids not included in below table, consult our technical office

Seals, recommended fluid temperature	NBR seals (standard) = -20°C ÷ +60°C (+80°C for **R**), with HFC hydraulic fluids = -20°C ÷ +50°C FKM seals (/PE option) = -20°C ÷ +80°C NBR low temp. seals (/BT option) = -40°C ÷ +60°C, with HFC hydraulic fluids = -20°C ÷ +50°C		
Recommended viscosity	20 ÷ 100 mm²/s - max allowed range 15 ÷ 380 mm²/s		
Max fluid contamination level — normal operation	ISO4406 class 18/16/13 NAS1638 class 7		see also filter section at www.atos.com or KTF catalog
Max fluid contamination level — longer life	ISO4406 class 16/14/11 NAS1638 class 5		
Hydraulic fluid	**Suitable seals type**	**Classification**	**Ref. Standard**
Mineral oils	NBR, FKM, NBR low temp.	HL, HLP, HLPD, HVLP, HVLPD	DIN 51524
Flame resistant without water	FKM	HFDU, HFDR	ISO 12922
Flame resistant with water	NBR, NBR low temp.	HFC	

14 DIAGRAMS (based on mineral oil ISO VG 46 at 50 °C)

1 Regulation diagrams
with flow rate Q = 1 l/min

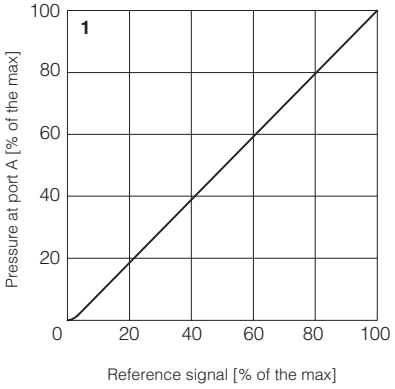

2 Pressure/flow diagrams
with reference signal set at Q = 1 l/min

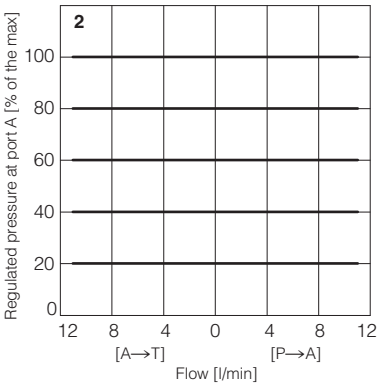

3-4 Min. pressure/flow diagrams
with zero reference signal

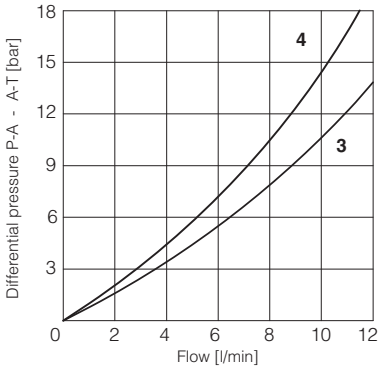

3 = Pressure drops vs. flow P→A
4 = Pressure drops vs. flow A→T

15 ELECTRONIC OPTIONS - only for **REB-NP** and **RES**

I = This option provides 4 ÷ 20 mA current reference and monitor signals, instead of the standard 0 ÷ 10 VDC.
Input signal can be reconfigured via software selecting between voltage and current, within a maximum range of ±10 VDC or ±20 mA.
It is normally used in case of long distance between the machine control unit and the valve or where the reference signal can be affected by electrical noise; the valve functioning is disabled in case of reference signal cable breakage.

Q = This option permits to inhibit the valve function without removing the power supply to the driver. Upon disable command the current to the solenoid is zeroed and the valve's spool moves to rest position.
The option /Q is suggested for all cases where the valve has to be frequently inhibited during the machine cycle – see 18.5 for signal specifications.

Z = This option provides, on the 12 pin main connector, the following additional features:
Fault output signal - see 18.6
Enable input signal - see above option /Q
Power supply for driver's logics and communication - see 18.2

16 POSSIBLE COMBINED OPTIONS

Electronic options: /IQ, /IZ

Note: **/T** Bluetooth adapter option can be combined with all other options

17 AIR BLEEDING

At the first valve commissioning the air eventually trapped inside the solenoid must be bled-off through the screw ① located at the rear side of the solenoid housing.
The presence of air may cause pressure instability and vibrations.

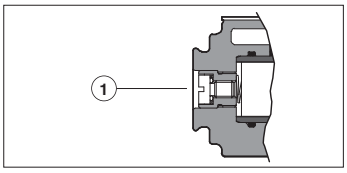

18 POWER SUPPLY AND SIGNALS SPECIFICATIONS - only for **REB-NP** and **RES**

Generic electrical output signals of the valve (e.g. fault or monitor signals) must not be directly used to activate safety functions, like to switch-ON/OFF the machine's safety components, as prescribed by the European standards (Safety requirements of fluid technology systems and components-hydraulics, ISO 4413).

For **REB-IL** signals see section 19

18.1 Power supply (V+ and V0)

The power supply must be appropriately stabilized or rectified and filtered: apply at least a 10000 μF/40 V capacitance to single phase rectifiers or a 4700 μF/40 V capacitance to three phase rectifiers. In case of separate power supply see 18.2.

⚠ A safety fuse is required in series to each power supply: 2,5 A time lag fuse.

18.2 Power supply for driver's logic and communication (VL+ and VL0) - only for **/Z** option

The power supply for driver's logic and communication must be appropriately stabilized or rectified and filtered: apply at least a 10000 μF/40 V capacitance to single phase rectifiers or a 4700 μF/40 V capacitance to three phase rectifiers.
The separate power supply for driver's logic on pin 9 and 10, allow to remove solenoid power supply from pin 1 and 2 maintaining active the diagnostics, USB and fieldbus communications.

⚠ A safety fuse is required in series to each driver's logic and communication power supply: 500 mA fast fuse.

18.3 Pressure reference input signal (P_INPUT+)

The driver controls in closed loop the current to the valve pressure proportionally to the external reference input signal.
Reference input signal is factory preset according to selected valve code, defaults are 0 ÷ 10 VDC for standard and 4 ÷ 20 mA for /I option.
Input signal can be reconfigured via software selecting between voltage and current, within a maximum range of ±10 VDC or ± 20 mA.
Drivers with fieldbus interface (BC, BP, EH) can be software set to receive reference signal directly by the machine control unit (fieldbus reference).
Analog reference input signal can be used as on-off commands with input range 0 ÷ 24 VDC.

18.4 Pressure monitor output signal (P_MONITOR)

The driver generates an analog output signal proportional to the actual pressure of the valve; the monitor output signal can be software set to show other signals available in the driver (e.g. analog reference, fieldbus reference).
Monitor output signal is factory preset according to selected valve code, defaults settings are 0 ÷10 VDC for standard and 4 ÷ 20 mA for /I option.
Output signal can be reconfigured via software selecting between voltage and current, within a maximum range of 0 ÷10 VDC or 0 ÷ 20 mA.

18.5 Enable input signal (ENABLE) - not for standard

To enable the driver, supply a 24 VDC on pin 3 (pin C): Enable input signal allows to enable/disable the current supply to the solenoid, without removing the electrical power supply to the driver; it is used to active the communication and the other driver functions when the valve must be disabled for safety reasons. This condition **does not comply** with norms IEC 61508 and ISO 13849.
Enable input signal can be used as generic digital input by software selection.

18.6 Fault output signal (FAULT) - only for **/Z** option

Fault output signal indicates fault conditions of the driver (solenoid short circuits/not connected, reference signal broken for 4 ÷ 20 mA input, etc.).
Fault presence corresponds to 0 VDC, normal working corresponds to 24 VDC. Fault status is not affected by the Enable input signal.

19 IO-LINK SIGNALS SPECIFICATIONS - only for **REB-IL**

19.1 Power supply for IO-Link communication (L+ and L-)

The IO-Link master provides dedicated 24 VDC power supply for IO-Link communication.
Maximum power consumption: 2 W
Internal electrical isolation of power L+, L- from P24, N24

19.2 Power supply for driver's logic and valve regulation (P24 and N24)

The IO-Link master provides dedicated 24 VDC power supply for valve regulation, logics and diagnostics.
Maximum power consumption: 50 W
Internal electrical isolation of power P24, N24 from L+, L-

19.3 IO-Link data line (C/Q)

C/Q signal is used to establish communication between IO-Link master and valve.

20 ELECTRONIC CONNECTIONS

20.1 Main connector signals - 7 pin (A1) Standard and /Q option - for REB-NP and RES

PIN	Standard	/Q	TECHNICAL SPECIFICATIONS	NOTES
A	**V+**		Power supply 24 VDC	Input - power supply
B	**V0**		Power supply 0 VDC	Gnd - power supply
C	**AGND**		Analog ground	Gnd - analog signal
		ENABLE	Enable (24 VDC) or disable (0 VDC) the driver, referred to V0	Input - on/off signal
D	**P_INPUT+**		Pressure reference input signal: ±10 VDC / ±20 mA maximum range Defaults are 0 ÷ 10 VDC for standard and 4 ÷ 20 mA for /I option	Input - analog signal **Software selectable**
E	**INPUT-**		Negative reference input signal for P_INPUT+	Input - analog signal
F	**P_MONITOR** referred to: AGND	V0	Pressure monitor output signal: 0 ÷ 10 VDC / 0 ÷ 20 mA maximum range Defaults are 0 ÷ 10 VDC for standard and 4 ÷ 20 mA for /I option	Output - analog signal **Software selectable**
G	**EARTH**		Internally connected to driver housing	

20.2 Main connector signals - 12 pin (A2) /Z option - for REB-NP and RES

PIN	/Z	TECHNICAL SPECIFICATIONS	NOTES
1	**V+**	Power supply 24 VDC	Input - power supply
2	**V0**	Power supply 0 VDC	Gnd - power supply
3	**ENABLE**	Enable (24 VDC) or disable (0 VDC) the driver, referred to VL0	Input - on/off signal
4	**P_INPUT+**	Pressure reference input signal: ±10 VDC / ±20 mA maximum range Defaults are 0 ÷ 10 VDC for standard and 4 ÷ 20 mA for /I option	Input - analog signal **Software selectable**
5	**INPUT-**	Negative reference input signal for INPUT+	Input - analog signal
6	**P_MONITOR**	Pressure monitor output signal: 0 ÷ 10 VDC / 0 ÷ 20 mA maximum range, referred to VL0 Defaults are 0 ÷ 10 VDC for standard and 4 ÷ 20 mA for /I option	Output - analog signal **Software selectable**
7	**NC**	Do not connect	
8	**NC**	Do not connect	
9	**VL+**	Power supply 24 VDC for driver's logic and communication	Input - power supply
10	**VL0**	Power supply 0 VDC for driver's logic and communication	Gnd - power supply
11	**FAULT**	Fault (0 VDC) or normal working (24 VDC), referred to VL0	Output - on/off signal
PE	**EARTH**	Internally connected to driver housing	

Note: do not disconnect VL0 before VL+ when the driver is connected to PC USB port

20.3 IO-Link connector signals - M12 - 5 pin - Coding A, port class B (A) only for REB-IL

PIN	SIGNAL	TECHNICAL SPECIFICATIONS	NOTES
1	**L+**	Power supply 24 VDC for IO-Link communication	Input - power supply
2	**P24**	Power supply 24 VDC for valve regulation, logics and diagnostics	Input - power supply
3	**L-**	Power supply 0 VDC for IO-Link communication	Gnd - power supply
4	**C/Q**	IO-Link data line	Input / Output - signal
5	**N24**	Power supply 0 VDC for valve regulation, logics and diagnostics	Gnd - power supply

Note: L+, L- and P24, N24 are electrically isolated

20.4 Communication connectors - for REB (B) and RES (B) - (C)

(B) **USB connector - M12 - 5 pin** always present

PIN	SIGNAL	TECHNICAL SPECIFICATION (1)
1	**+5V_USB**	Power supply
2	**ID**	Identification
3	**GND_USB**	Signal zero data line
4	**D-**	Data line -
5	**D+**	Data line +

(C1) **BC fieldbus execution, connector - M12 - 5 pin (2)**

PIN	SIGNAL	TECHNICAL SPECIFICATION (1)
1	**CAN_SHLD**	Shield
2	**NC**	do not connect
3	**CAN_GND**	Signal zero data line
4	**CAN_H**	Bus line (high)
5	**CAN_L**	Bus line (low)

(C2) **BP fieldbus execution, connector - M12 - 5 pin (2)**

PIN	SIGNAL	TECHNICAL SPECIFICATION (1)
1	**+5V**	Termination supply signal
2	**LINE-A**	Bus line (high)
3	**DGND**	Data line and termination signal zero
4	**LINE-B**	Bus line (low)
5	**SHIELD**	

(C3) (C4) **EH fieldbus execution, connector - M12 - 4 pin (2)**

PIN	SIGNAL	TECHNICAL SPECIFICATION (1)
1	**TX+**	Transmitter
2	**RX+**	Receiver
3	**TX-**	Transmitter
4	**RX-**	Receiver
Housing	**SHIELD**	

(1) Shield connection on connector's housing is recommended

(2) Only for **RES** execution

20.5 Solenoid connection - only for R

PIN	SIGNAL	TECHNICAL SPECIFICATION	Connector code 666
1	**COIL**	Power supply	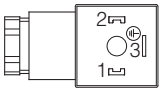
2	**COIL**	Power supply	
3	**GND**	Ground	

20.6 Pressure transducer connection - only for R

PIN	SIGNAL	TECHNICAL SPECIFICATION	Connector code ZBE-08
1	**V+**	Power supply	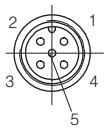
2	**NC**	Not connected	
3	**TR**	Output signal 4 ÷ 20 mA	
4	**NC**	Not connected	
5	**NC**	Not connected	

20.7 REB-NP connections layout

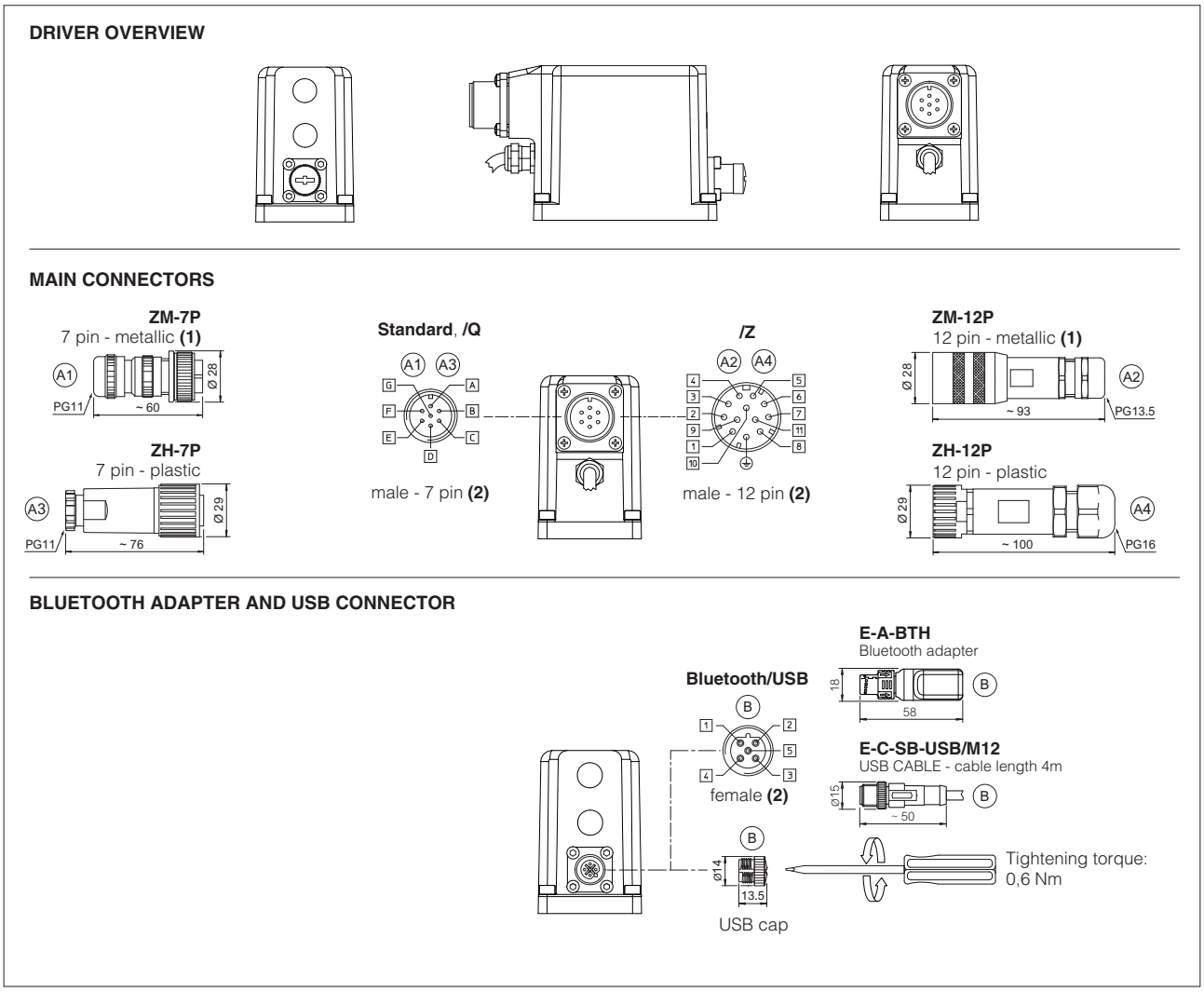

(1) Use of metallic connectors is strongly recommended in order to fulfill EMC requirements **(2)** Pin layout always referred to driver's view

20.8 REB-IL connections layout

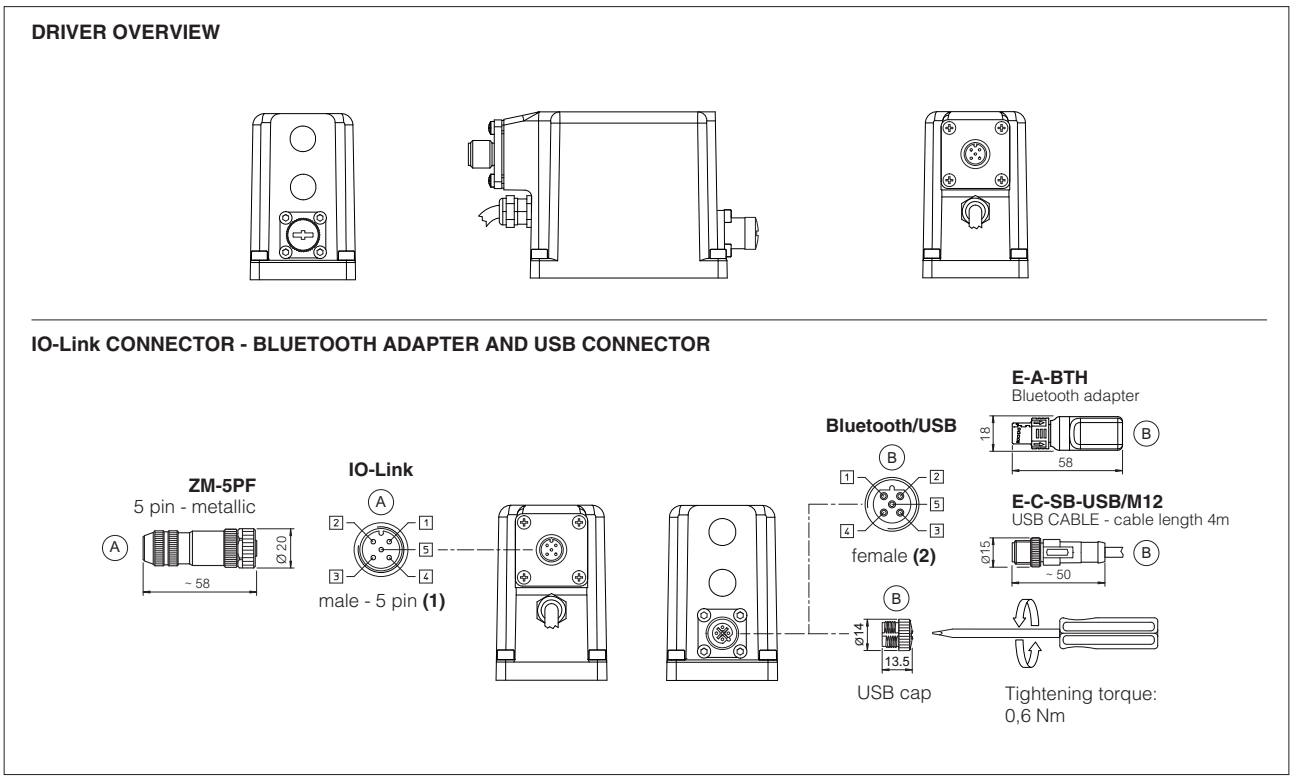

(1) Use of metallic connectors is strongly recommended in order to fulfill EMC requirements **(2)** Pin layout always referred to driver's view

20.9 RES connections layout

DRIVER OVERVIEW

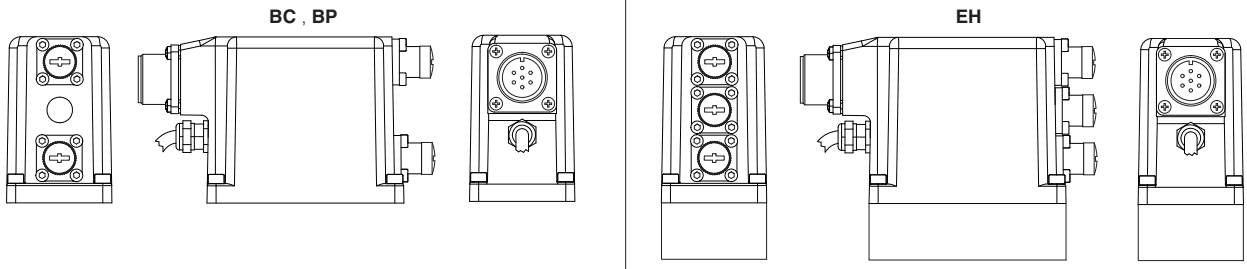

MAIN CONNECTORS

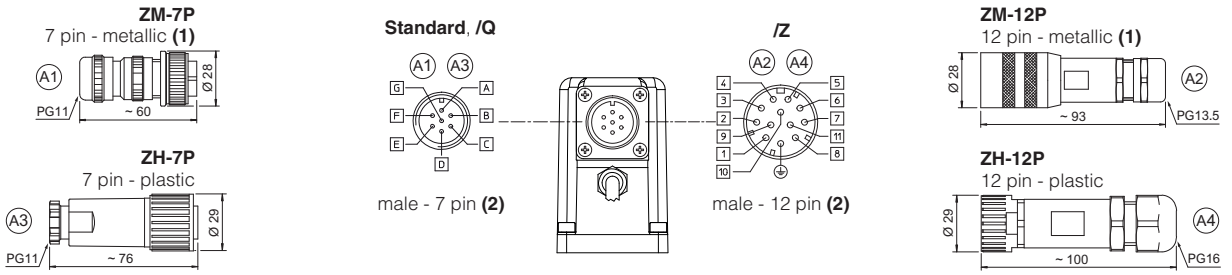

FIELDBUS CONNECTORS

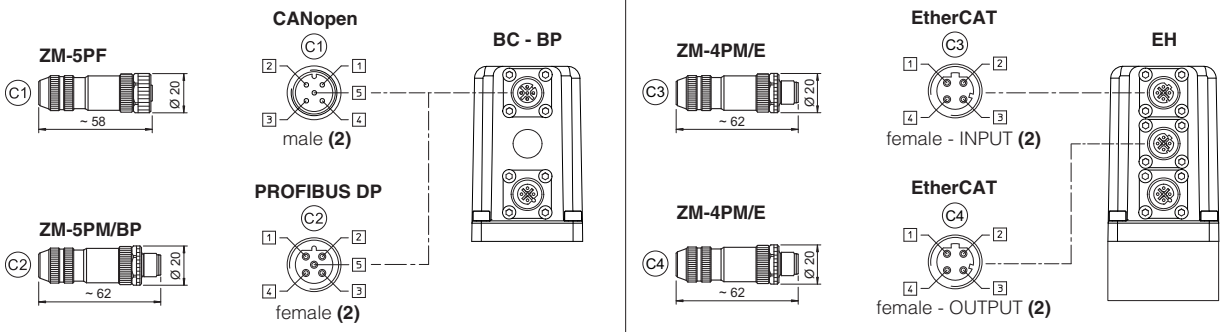

BLUETOOTH ADAPTER AND USB CONNECTOR

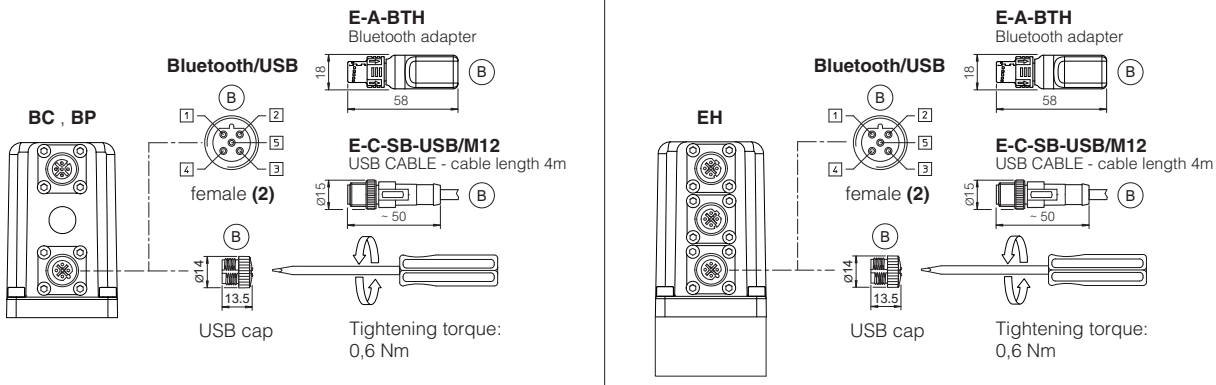

(1) Use of metallic connectors is strongly recommended in order to fulfill EMC requirements **(2)** Pin layout always referred to driver's view

21 CONNECTORS CHARACTERISTICS - to be ordered separately

21.1 Main connectors - 7 pin - for **REB-NP** and **RES**

CONNECTOR TYPE	POWER SUPPLY AND SIGNALS	POWER SUPPLY AND SIGNALS
CODE	(A1) ZM-7P	(A3) ZH-7P
Type	7pin female straight circular	7pin female straight circular
Standard	According to MIL-C-5015	According to MIL-C-5015
Material	Metallic	Plastic reinforced with fiber glass
Cable gland	PG11	PG11
Recommended cable	LiYCY 7 x 0,75 mm² max 20 m (logic and power supply) or LiYCY 7 x 1 mm² max 40 m (logic and power supply)	LiYCY 7 x 0,75 mm² max 20 m (logic and power supply) or LiYCY 7 x 1 mm² max 40 m (logic and power supply)
Conductor size	up to 1 mm² - available for 7 wires	up to 1 mm² - available for 7 wires
Connection type	to solder	to solder
Protection (EN 60529)	IP 67	IP 67

21.2 Main connectors - 12 pin - for **REB-NP** and **RES**

CONNECTOR TYPE	POWER SUPPLY AND SIGNALS	POWER SUPPLY AND SIGNALS
CODE	(A2) ZM-12P	(A4) ZH-12P
Type	12pin female straight circular	12pin female straight circular
Standard	DIN 43651	DIN 43651
Material	Metallic	Plastic reinforced with fiber glass
Cable gland	PG13,5	PG16
Recommended cable	LiYCY 12 x 0,75 mm² max 20 m (logic and power supply)	LiYCY 10 x 0,14mm² max 40 m (logic) LiYY 3 x 1mm² max 40 m (power supply)
Conductor size	0,5 mm² to 1,5 mm² - available for 12 wires	0,14 mm² to 0,5 mm² - available for 9 wires 0,5 mm² to 1,5 mm² - available for 3 wires
Connection type	to crimp	to crimp
Protection (EN 60529)	IP 67	IP 67

21.3 IO-Link connector - only for **REB-IL**

CONNECTOR TYPE	IL IO-Link
CODE	(A) ZM-5PF
Type	5pin female straight circular
Standard	M12 coding A – IEC 61076-2-101
Material	Metallic
Cable gland	Pressure nut - cable diameter 6÷8 mm
Recommended cable	5 x 0,75 mm² max 20 m
Connection type	screw terminal
Protection (EN 60529)	IP 67

21.4 Fieldbus communication connectors - only for **RES**

CONNECTOR TYPE	BC CANopen (1)		BP PROFIBUS DP (1)		EH EtherCAT (2)
CODE	(C1) ZM-5PF	(C2) ZM-5PM	(C1) ZM-5PF/BP	(C2) ZM-5PM/BP	(C1) (C2) ZM-4PM/E
Type	5 pin female straight circular	5 pin male straight circular	5 pin female straight circular	5 pin male straight circular	4 pin male straight circular
Standard	M12 coding A – IEC 61076-2-101		M12 coding B – IEC 61076-2-101		M12 coding D – IEC 61076-2-101
Material	Metallic		Metallic		Metallic
Cable gland	Pressure nut - cable diameter 6÷8 mm		Pressure nut - cable diameter 6÷8 mm		Pressure nut - cable diameter 4÷8 mm
Cable	CANbus Standard (DR 303-1)		PROFIBUS DP Standard		Ethernet standard CAT-5
Connection type	screw terminal		screw terminal		terminal block
Protection (EN 60529)	IP67		IP 67		IP 67

(1) E-TRM-** terminators can be ordered separately - see tech table **GS500**

(2) Internally terminated

22 FASTENING BOLTS AND SEALS

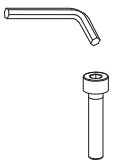	**Fastening bolts:** 4 socket head screws M5x50 class 12.9 Tightening torque = 8 Nm
	Seals: 4 OR 108 Diameter of ports P, A, T: Ø 5 mm Port B not used

23 INSTALLATION DIMENSIONS [mm]

ISO 4401: 2005
Mounting surface: 4401-03-02-0-05 (see table P005)

Mass [kg]		
R	**REB, RES**	**RES-EH**
2,2	2,7	2,8

RZGO-R-P

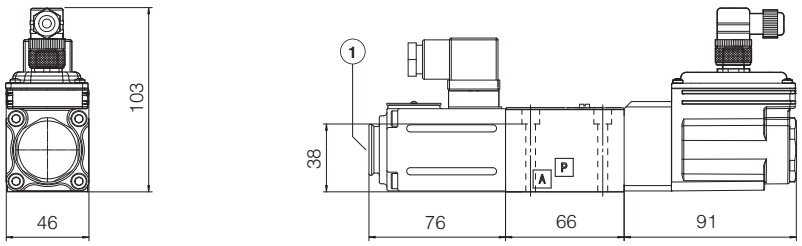

RZGO-REB-P-NP
RZGO-REB-P-IL

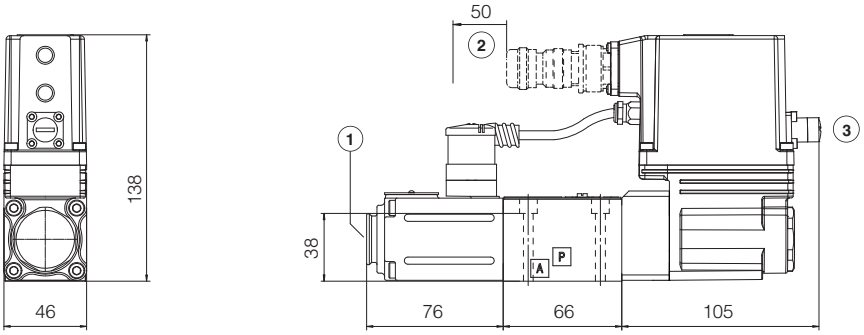

RZGO-RES-P-BP
RZGO-RES-P-BC

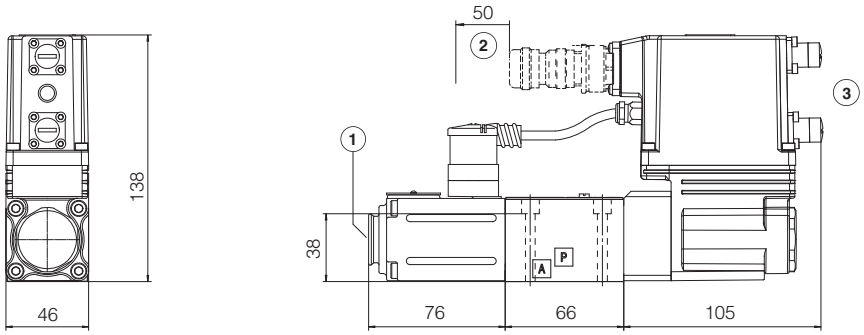

RZGO-RES-P-EH

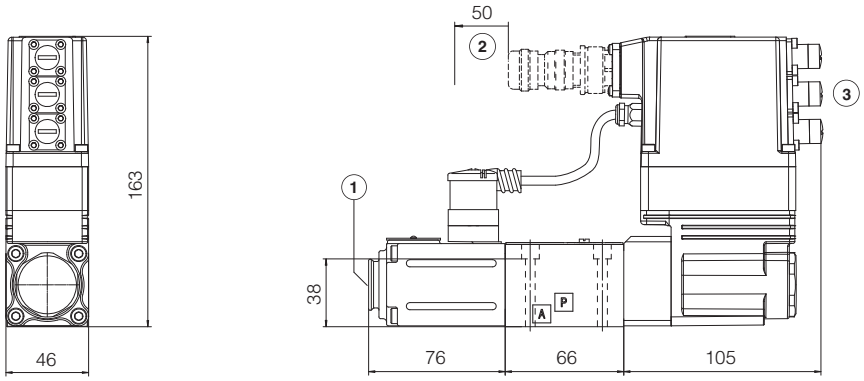

(1) = Air bleeding, see section 17

(2) = Space required for connection cable and for connector removal

(3) = The dimensions of connectors and Bluetooth adapter must be considered, see section 20.7, 20.8 and 20.9

24 RELATED DOCUMENTATION

FS001	Basics for digital electrohydraulics
FS900	Operating and maintenance information for proportional valves
GS203	E-BM-RES digital driver
GS500	Programming tools
GS510	Fieldbus
GS520	IO-Link interface
K800	Electric and electronic connectors
P005	Mounting surfaces for electrohydraulic valves
QB400	Quickstart for REB valves commissioning
QF400	Quickstart for RES valves commissioning
E-MAN-BM-RES	E-BM-RES user manual (off-board)
E-MAN-RI-REB	REB user manual
E-MAN-RI-RES	RES user manual

Proportional reducing valves high performance

piloted, with on-board pressure transducer

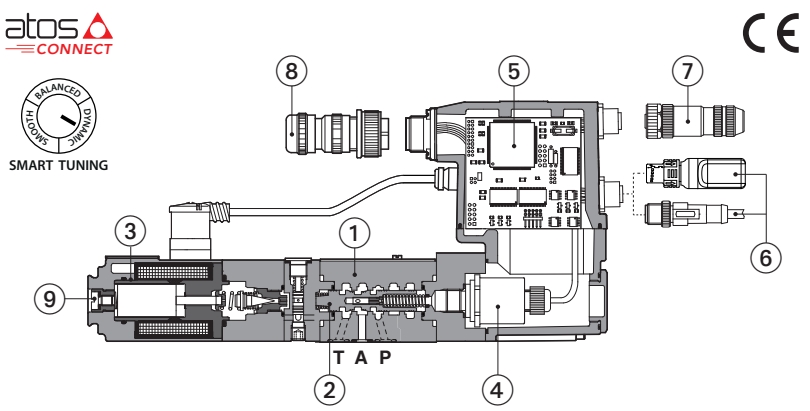

RZGO-RES-P-BC-033

① Valve body
② Poppet
③ Proportional solenoid
④ On-board pressure transducer
⑤ On-board digital driver
⑥ Bluetooth/USB connection
⑦ Fieldbus connector
⑧ Main connector
⑨ Screw for air blending

RZGO-R , RZGO-REB, RZGO-RES

Spool type, piloted, digital proportional reducing valves with on-board pressure transducer for pressure closed loop controls.

R to be coupled with off-board driver.

REB basic execution, with on-board digital driver, with analog reference signal or IO-Link interface for digital reference signals, valve settings, and real-time diagnostics.

RES full execution, with on-board digital driver which includes also fieldbus interfaces for digital reference signals, valve settings, and real-time diagnostics.

For **REB** and **RES**, Bluetooth/USB connection is always present for valve settings via mobile App and Atos PC software.

Size: **06** - ISO 4401
Max flow: **40 l/min**
Max pressure: **350 bar**

1 MODEL CODE

RZGO	-	REB	-	P	-	NP	-	033	/	210	/	*	/	*	/	*	/	*

Proportional pressure reducing valve, piloted

R = off-board driver, see section 3
REB = basic on-board digital driver
RES = full on-board digital driver

P = with on-board pressure transducer

IO-Link interface, only for REB, see section 8 :
NP = Not present **IL** = IO-Link

Fieldbus interfaces, only for RES, see section 9 :
BC = CANopen **EH** = EtherCAT
BP = PROFIBUS DP

Configuration:
033 = regulation on port A, discharge in T (pilot operated version)

Max regulated pressure:
100 = 100 bar **315** = 315 bar
210 = 210 bar **350** = 350 bar

Electronic options, only for **REB-NP** and **RES (1)**:
I = current reference input and monitor 4÷20 mA
Q = enable signal
Z = double power supply, enable, fault and monitor signals -12 pin connector

Bluetooth option, only for **REB** and **RES (1)**, see section 6 :
T = Bluetooth adapter supplied with the valve

Series number

Seals material, see section 13 :
- = NBR
PE = FKM
BT = NBR low temp.

(1) Possible combined options: IQ, IZ (/T Bluetooth adapter option can be combined with all other options)

2 HYDRAULIC SYMBOLS

RZGO-R

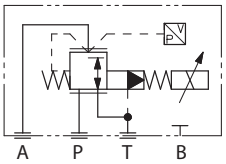

RZGO-REB RZGO-RES

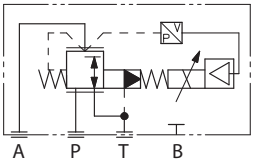

3 OFF-BOARD ELECTRONIC DRIVER - only for **R**

Drivers model	E-BM-RES
Type	Digital
Format	DIN rail panel format
Tech table	GS203

4 GENERAL NOTES

Atos digital proportionals valves are CE marked according to the applicable directives (e.g. Immunity and Emission EMC Directive).
Installation, wirings and start-up procedures must be performed according to the general prescriptions shown in tech table **FS900** and in the user manuals included in the E-SW-SETUP programming software.

5 VALVE SETTINGS AND PROGRAMMING TOOLS - see tech. table **GS500**

5.1 Atos CONNECT mobile App

Free downloadable App for smartphones and tablets which allows quick access to valve main functional parameters and basic diagnostic information via Bluetooth, thus avoiding physical cable connection and significantly reducing commissioning time.
Atos CONNECT supports Atos digital valve drivers equipped with E-A-BTH adapter or with built-in Bluetooth. It does not support valves with p/Q control or axis controls.

Download on the App Store

GET IT ON Google Play

5.2 E-SW-SETUP PC software

Free downloadable software for PC allows to set all valve functional parameters and to access complete diagnostic information of digital valve drivers via Bluetooth/USB service port.
Atos E-SW-SETUP PC software supports all Atos digital valve drivers and it is available at www.atos.com in MyAtos area.

WARNING: drivers USB port is not isolated! For E-C-SB-USB/M12 cable, the use of E-A-SB-USB/OPT isolator adapter is highly recommended for PC protection

Bluetooth or USB connection

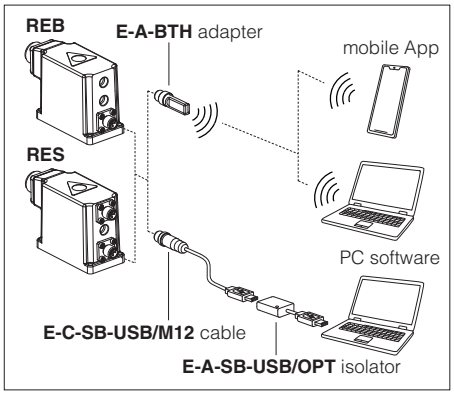

6 BLUETOOTH OPTION - see tech. table **GS500**

T option adds Bluetooth® connectivity to Atos valve drivers thanks to E-A-BTH adapter, which can be left permanently installed on-board, to allow the Bluetooth connection with the valve drivers at any time. E-A-BTH adapter can also be purchased separately and used to connect with any supported Atos digital product.
Bluetooth connection to the valve can be protected against unauthorised access by setting a personal password. The adapter leds visually indicates the status of valve driver and Bluetooth connection.

WARNING: for the list of countries where the Bluetooth adapter has been approved, see tech. table **GS500**
T option is not available for the Indian market, so the Bluetooth adapter must be ordered separately.

7 SMART TUNING

Smart tuning allows to adjust the valve dynamic response in order to match different hydraulic conditions and performance requirements.

The valve is provided with 3 factory settings for the pressure control:
- **dynamic** fast response time for best dynamic performances. Default factory setting for pressure valves
- **balanced** average response time suitable for major applications
- **smooth** attenuated response time for slow regulation without overshoots

Smart tuning setting can be switched from Dynamic (default) to Balanced or Smooth via software or fieldbus; if requested, performances can be further customized directly tuning each single control parameter. For details consult related manuals E-MAN-* and Quickstart, see section 24.

Below indications have to be considered as a general guideline, being affected by hydraulic circuit stiffness, working flow and dead volume.

High stiffness - Low flow - Small volume

1 = dynamic
2 = balanced
3 = smooth

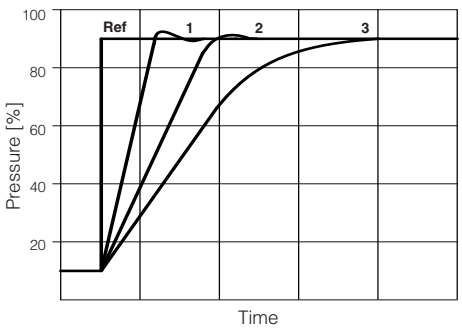

Low stiffness - High flow - Large volume

1 = dynamic
2 = balanced
3 = smooth

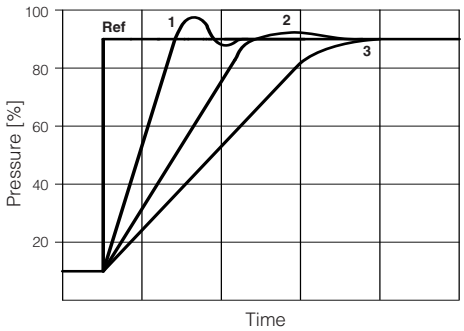

8 IO-LINK - only for **REB**, see tech. table **GS520**

IO-Link allows low cost digital communication between the valve and machine central unit. The valve is directly connected to a port of an IO-Link master (point-to-point connection) via low-cost unshielded cables for digital reference, diagnostic and settings. The IO-Link master works as a hub exchanging this information with the machine central unit via fieldbus.

9 FIELDBUS - only for **RES**, see tech. table **GS510**

Fieldbus allows valve direct communication with machine control unit for digital reference, valve diagnostics and settings. These execution allow to operate the valves through fieldbus or analog signals available on the main connector.

10 GENERAL CHARACTERISTICS

Assembly position	Any position
Subplate surface finishing to ISO 4401	Acceptable roughness index: Ra ≤ 0,8, recommended Ra 0,4 – Flatness ratio 0,01/100
MTTFd valves according to EN ISO 13849	75 years, for further details see technical table P007
Ambient temperature range	**R:** **Standard** = -20°C ÷ +70°C **/PE** option = -20°C ÷ +70°C **/BT** option = -40°C ÷ +60°C **REB, RES:** **Standard** = -20°C ÷ +60°C **/PE** option = -20°C ÷ +60°C **/BT** option = -40°C ÷ +60°C
Storage temperature range	**R:** **Standard** = -20°C ÷ +80°C **/PE** option = -20°C ÷ +80°C **/BT** option = -40°C ÷ +70°C **REB, RES:** **Standard** = -20°C ÷ +70°C **/PE** option = -20°C ÷ +70°C **/BT** option = -40°C ÷ +70°C
Surface protection	Zinc coating with black passivation, galvanic treatment (driver housing for REB and RES)
Corrosion resistance	Salt spray test (EN ISO 9227) > 200 h
Vibration resistance	See technical table G004 (for REB and RES)
Compliance	CE according to EMC directive 2014/30/EU (Immunity: EN 61000-6-2; Emission: EN 61000-6-3) RoHS Directive 2011/65/EU as last update by 2015/863/EU REACH Regulation (EC) n°1907/2006

11 HYDRAULIC CHARACTERISTICS - based on mineral oil ISO VG 46 at 50 °C

Valve model		**RZGO-*-033**
Max regulated pressure	[bar]	100; 210; 315; 350
Max pressure at port P	[bar]	350
Max pressure at port T	[bar]	210
Min regulated pressure	[bar]	see min. pressure / flow diagrams at section 14
Min ÷ Max flow	[l/min]	2,5 ÷ 40
Response time 0-100% step signal (depending on installation) **(1)**	[ms]	≤ 35
Hysteresis		≤ 0,5 [% of max pressure]
Linearity		≤ 1,0 [% of max pressure]
Repeatability		≤ 0,5 [% of max pressure]
Thermal drift		zero point displacement < 1% at ΔT = 40°C

Note: above performance data refer to valves coupled with Atos electronic drivers, see section 3

(1) Average response time value; the pressure variation in consequence of a modification of the reference input signal to the valve is affected by the stiffness of the hydraulic circuit: greater is the stiffness of the circuit, faster is the dynamic response, see section 7

12 ELECTRICAL CHARACTERISTICS

Power supplies	Nominal : +24 VDC Rectified and filtered : VRMS = 20 ÷ 32 VMAX (ripple max 10 % VPP)				
Max power consumption	**R** = 30 W **REB**, **RES** = 50 W				
Max. solenoid current	3 A				
Coil resistance R at 20°C	3 ÷ 3,3 Ω				
Analog input signals	Voltage: range ±10 VDC (24 VMAX tolerant) Input impedance: Ri > 50 kΩ Current: range ±20 mA Input impedance: Ri = 500 Ω				
Monitor output	Voltage: maximum range 0 ÷ 10 VDC @ max 5 mA Current: maximum range 0 ÷ 20 mA @ max 500 Ω load resistance				
Enable input	Range: 0 ÷ 9 VDC (OFF state), 15 ÷ 24 VDC (ON state), 9 ÷ 15 VDC (not accepted); Input impedance: Ri > 87 kΩ				
Fault output	Output range : 0 ÷ 24 VDC (ON state ≅ VL+ [logic power supply] ; OFF state ≅ 0 V) @ max 50 mA; external negative voltage not allowed (e.g. due to inductive loads)				
Pressure transducer **(1)**	E-ATR-8/*/I Output signal: 4 ÷ 20 mA (see tech table **GS465**)				
Alarms	Solenoid not connected/short circuit, cable break with current reference signal, over/under temperature, current control monitoring, power supplies level, pressure transducer failure				
Insulation class	H (180°) Due to the occurring surface temperatures of the solenoid coils, the European standards ISO 13732-1 and EN982 must be taken into account				
Protection degree to DIN EN60529	**R** = IP65; **REB**, **RES** = IP66 / IP67 with mating connectors				
Duty factor	Continuous rating (ED=100%)				
Tropicalization	Tropical coating on electronics PCB				
Additional characteristics	Short circuit protection of solenoid's current supply; current control by P.I.D. with rapid solenoid switching; protection against reverse polarity of power supply				
Communication interface	USB Atos ASCII coding	IO-Link Interface and System Specification 1.1.3	CANopen EN50325-4 + DS408	PROFIBUS DP EN50170-2/IEC61158	EtherCAT IEC 61158
Communication physical layer	not insulated USB 2.0 + USB OTG	SDCI class port B	optical insulated CAN ISO11898	optical insulated RS485	Fast Ethernet, insulated 100 Base TX
Recommended wiring cable	LiYCY shielded cables, see section 21				

(1) In case of pressure transducer failure, the valve's reaction can be configured through Atos E-SW-SETUP software to:
- cut off the current to solenoid, therefore the regulated pressure will be reduced to minimum value (default setting)
- automatically switch the pressure control from closed loop (dynamic, balanced, smooth) to open loop, to let the valve to temporarily operate with reduced regulation accuracy

Note: a maximum time of 500 ms (depending on communication type) has to be considered between the driver energizing with the 24 VDC power supply and when the valve is ready to operate. During this time the current to the valve coils is switched to zero.

13 SEALS AND HYDRAULIC FLUIDS - for other fluids not included in below table, consult our technical office

Seals, recommended fluid temperature	NBR seals (standard) = -20°C ÷ +60°C (+80°C for **R**), with HFC hydraulic fluids = -20°C ÷ +50°C FKM seals (/PE option) = -20°C ÷ +80°C NBR low temp. seals (/BT option) = -40°C ÷ +60°C, with HFC hydraulic fluids = -20°C ÷ +50°C		
Recommended viscosity	20 ÷ 100 mm²/s - max allowed range 15 ÷ 380 mm²/s		
Max fluid contamination level — normal operation	ISO4406 class 18/16/13 NAS1638 class 7		see also filter section at www.atos.com or KTF catalog
Max fluid contamination level — longer life	ISO4406 class 16/14/11 NAS1638 class 5		
Hydraulic fluid	**Suitable seals type**	**Classification**	**Ref. Standard**
Mineral oils	NBR, FKM, NBR low temp.	HL, HLP, HLPD, HVLP, HVLPD	DIN 51524
Flame resistant without water	FKM	HFDU, HFDR	ISO 12922
Flame resistant with water	NBR, NBR low temp.	HFC	

14 DIAGRAMS (based on mineral oil ISO VG 46 at 50 °C)

1 Regulation diagrams
with flow rate Q = 10 l/min

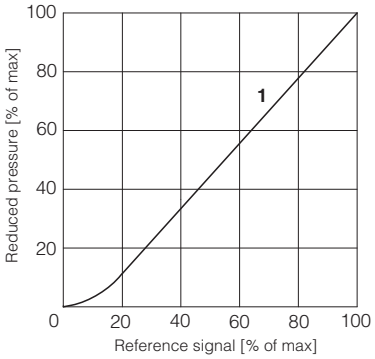

2 Pressure/flow diagrams
with reference signal set at Q = 10 l/min

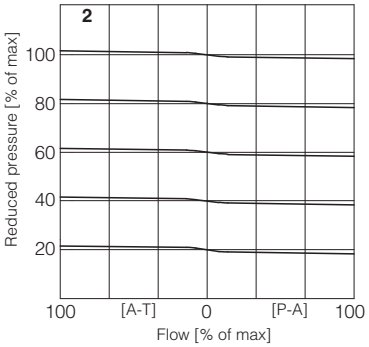

3-4 Min. pressure/flow diagrams
with zero reference signal

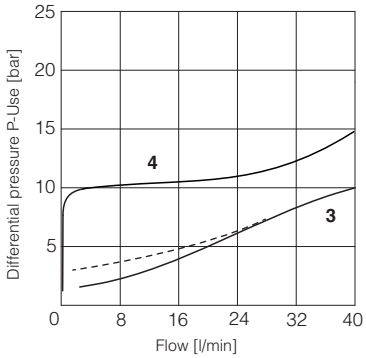

3 = A → T (dotted line for pressure range /350)
4 = Pressure drops vs. flow P n A

15 ELECTRONIC OPTIONS - only for **REB-NP** and **RES**

I = This option provides 4 ÷ 20 mA current reference and monitor signals, instead of the standard 0 ÷ 10 VDC.
Input signal can be reconfigured via software selecting between voltage and current, within a maximum range of ±10 VDC or ±20 mA.
It is normally used in case of long distance between the machine control unit and the valve or where the reference signal can be affected by electrical noise; the valve functioning is disabled in case of reference signal cable breakage.

Q = This option permits to inhibit the valve function without removing the power supply to the driver. Upon disable command the current to the solenoid is zeroed and the valve's spool moves to rest position.
The option /Q is suggested for all cases where the valve has to be frequently inhibited during the machine cycle – see 18.5 for signal specifications.

Z = This option provides, on the 12 pin main connector, the following additional features:
Fault output signal - see 18.6
Enable input signal - see above option /Q
Power supply for driver's logics and communication - see 18.2

16 POSSIBLE COMBINED OPTIONS

Electronic options: /IQ, /IZ

Note: **/T** Bluetooth adapter option can be combined with all other options

17 AIR BLEEDING

At the first valve commissioning the air eventually trapped inside the solenoid must be bled-off through the screw ① located at the rear side of the solenoid housing.
The presence of air may cause pressure instability and vibrations.

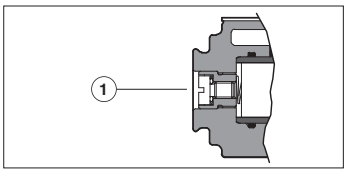

18 POWER SUPPLY AND SIGNALS SPECIFICATIONS - only for **REB-NP** and **RES**

Generic electrical output signals of the valve (e.g. fault or monitor signals) must not be directly used to activate safety functions, like to switch-ON/OFF the machine's safety components, as prescribed by the European standards (Safety requirements of fluid technology systems and components-hydraulics, ISO 4413).

For **REB-IL** signals see section 19

18.1 Power supply (V+ and V0)

The power supply must be appropriately stabilized or rectified and filtered: apply at least a 10000 μF/40 V capacitance to single phase rectifiers or a 4700 μF/40 V capacitance to three phase rectifiers. In case of separate power supply see 18.2.

⚠ A safety fuse is required in series to each power supply: 2,5 A time lag fuse.

18.2 Power supply for driver's logic and communication (VL+ and VL0) - only for **/Z** option

The power supply for driver's logic and communication must be appropriately stabilized or rectified and filtered: apply at least a 10000 μF/40 V capacitance to single phase rectifiers or a 4700 μF/40 V capacitance to three phase rectifiers.
The separate power supply for driver's logic on pin 9 and 10, allow to remove solenoid power supply from pin 1 and 2 maintaining active the diagnostics, USB and fieldbus communications.

⚠ A safety fuse is required in series to each driver's logic and communication power supply: 500 mA fast fuse.

18.3 Pressure reference input signal (P_INPUT+)

The driver controls in closed loop the current to the valve pressure proportionally to the external reference input signal.
Reference input signal is factory preset according to selected valve code, defaults are 0 ÷ 10 VDC for standard and 4 ÷ 20 mA for /I option.
Input signal can be reconfigured via software selecting between voltage and current, within a maximum range of ±10 VDC or ± 20 mA.
Drivers with fieldbus interface (BC, BP, EH) can be software set to receive reference signal directly by the machine control unit (fieldbus reference).
Analog reference input signal can be used as on-off commands with input range 0 ÷ 24 VDC.

18.4 Pressure monitor output signal (P_MONITOR)

The driver generates an analog output signal proportional to the actual pressure of the valve; the monitor output signal can be software set to show other signals available in the driver (e.g. analog reference, fieldbus reference).
Monitor output signal is factory preset according to selected valve code, defaults settings are 0 ÷10 VDC for standard and 4 ÷ 20 mA for /I option.
Output signal can be reconfigured via software selecting between voltage and current, within a maximum range of 0 ÷10 VDC or 0 ÷ 20 mA.

18.5 Enable input signal (ENABLE) - not for standard

To enable the driver, supply a 24 VDC on pin 3 (pin C): Enable input signal allows to enable/disable the current supply to the solenoid, without removing the electrical power supply to the driver; it is used to active the communication and the other driver functions when the valve must be disabled for safety reasons. This condition **does not comply** with norms IEC 61508 and ISO 13849.
Enable input signal can be used as generic digital input by software selection.

18.6 Fault output signal (FAULT) - only for **/Z** option

Fault output signal indicates fault conditions of the driver (solenoid short circuits/not connected, reference signal broken for 4 ÷ 20 mA input, etc.).
Fault presence corresponds to 0 VDC, normal working corresponds to 24 VDC. Fault status is not affected by the Enable input signal.

19 IO-LINK SIGNALS SPECIFICATIONS - only for **REB-IL**

19.1 Power supply for IO-Link communication (L+ and L-)

The IO-Link master provides dedicated 24 VDC power supply for IO-Link communication.
Maximum power consumption: 2 W
Internal electrical isolation of power L+, L- from P24, N24

19.2 Power supply for driver's logic and valve regulation (P24 and N24)

The IO-Link master provides dedicated 24 VDC power supply for valve regulation, logics and diagnostics.
Maximum power consumption: 50 W
Internal electrical isolation of power P24, N24 from L+, L-

19.3 IO-Link data line (C/Q)

C/Q signal is used to establish communication between IO-Link master and valve.

20 ELECTRONIC CONNECTIONS

20.1 Main connector signals - 7 pin (A1) Standard and /Q option - for REB-NP and RES

PIN	Standard	/Q	TECHNICAL SPECIFICATIONS	NOTES
A	**V+**		Power supply 24 VDC	Input - power supply
B	**V0**		Power supply 0 VDC	Gnd - power supply
C	**AGND**		Analog ground	Gnd - analog signal
		ENABLE	Enable (24 VDC) or disable (0 VDC) the driver, referred to V0	Input - on/off signal
D	**P_INPUT+**		Pressure reference input signal: ±10 VDC / ±20 mA maximum range Defaults are 0 ÷ 10 VDC for standard and 4 ÷ 20 mA for /I option	Input - analog signal **Software selectable**
E	**INPUT-**		Negative reference input signal for P_INPUT+	Input - analog signal
F	**P_MONITOR** referred to: AGND	V0	Pressure monitor output signal: 0 ÷ 10 VDC / 0 ÷ 20 mA maximum range Defaults are 0 ÷ 10 VDC for standard and 4 ÷ 20 mA for /I option	Output - analog signal **Software selectable**
G	**EARTH**		Internally connected to driver housing	

20.2 Main connector signals - 12 pin (A2) /Z option - for REB-NP and RES

PIN	/Z	TECHNICAL SPECIFICATIONS	NOTES
1	**V+**	Power supply 24 VDC	Input - power supply
2	**V0**	Power supply 0 VDC	Gnd - power supply
3	**ENABLE**	Enable (24 VDC) or disable (0 VDC) the driver, referred to VL0	Input - on/off signal
4	**P_INPUT+**	Pressure reference input signal: ±10 VDC / ±20 mA maximum range Defaults are 0 ÷ 10 VDC for standard and 4 ÷ 20 mA for /I option	Input - analog signal **Software selectable**
5	**INPUT-**	Negative reference input signal for INPUT+	Input - analog signal
6	**P_MONITOR**	Pressure monitor output signal: 0 ÷ 10 VDC / 0 ÷ 20 mA maximum range, referred to VL0 Defaults are 0 ÷ 10 VDC for standard and 4 ÷ 20 mA for /I option	Output - analog signal **Software selectable**
7	**NC**	Do not connect	
8	**NC**	Do not connect	
9	**VL+**	Power supply 24 VDC for driver's logic and communication	Input - power supply
10	**VL0**	Power supply 0 VDC for driver's logic and communication	Gnd - power supply
11	**FAULT**	Fault (0 VDC) or normal working (24 VDC), referred to VL0	Output - on/off signal
PE	**EARTH**	Internally connected to driver housing	

Note: do not disconnect VL0 before VL+ when the driver is connected to PC USB port

20.3 IO-Link connector signals - M12 - 5 pin - Coding A, port class B (A) only for REB-IL

PIN	SIGNAL	TECHNICAL SPECIFICATIONS	NOTES
1	**L+**	Power supply 24 VDC for IO-Link communication	Input - power supply
2	**P24**	Power supply 24 VDC for valve regulation, logics and diagnostics	Input - power supply
3	**L-**	Power supply 0 VDC for IO-Link communication	Gnd - power supply
4	**C/Q**	IO-Link data line	Input / Output - signal
5	**N24**	Power supply 0 VDC for valve regulation, logics and diagnostics	Gnd - power supply

Note: L+, L- and P24, N24 are electrically isolated

20.4 Communication connectors - for REB (B) and RES (B) - (C)

(B) **USB connector - M12 - 5 pin** always present

PIN	SIGNAL	TECHNICAL SPECIFICATION (1)
1	**+5V_USB**	Power supply
2	**ID**	Identification
3	**GND_USB**	Signal zero data line
4	**D-**	Data line -
5	**D+**	Data line +

(C1) **BC fieldbus execution, connector - M12 - 5 pin (2)**

PIN	SIGNAL	TECHNICAL SPECIFICATION (1)
1	**CAN_SHLD**	Shield
2	**NC**	do not connect
3	**CAN_GND**	Signal zero data line
4	**CAN_H**	Bus line (high)
5	**CAN_L**	Bus line (low)

(C2) **BP fieldbus execution, connector - M12 - 5 pin (2)**

PIN	SIGNAL	TECHNICAL SPECIFICATION (1)
1	**+5V**	Termination supply signal
2	**LINE-A**	Bus line (high)
3	**DGND**	Data line and termination signal zero
4	**LINE-B**	Bus line (low)
5	**SHIELD**	

(C3) (C4) **EH fieldbus execution, connector - M12 - 4 pin (2)**

PIN	SIGNAL	TECHNICAL SPECIFICATION (1)
1	**TX+**	Transmitter
2	**RX+**	Receiver
3	**TX-**	Transmitter
4	**RX-**	Receiver
Housing	**SHIELD**	

(1) Shield connection on connector's housing is recommended

(2) Only for **RES** execution

20.5 Solenoid connection - only for R

PIN	SIGNAL	TECHNICAL SPECIFICATION	Connector code 666
1	**COIL**	Power supply	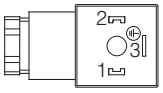
2	**COIL**	Power supply	
3	**GND**	Ground	

20.6 Pressure transducer connection - only for R

PIN	SIGNAL	TECHNICAL SPECIFICATION	Connector code ZBE-08
1	**V+**	Power supply	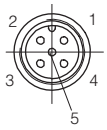
2	**NC**	Not connected	
3	**TR**	Output signal 4 ÷ 20 mA	
4	**NC**	Not connected	
5	**NC**	Not connected	

20.7 REB-NP connections layout

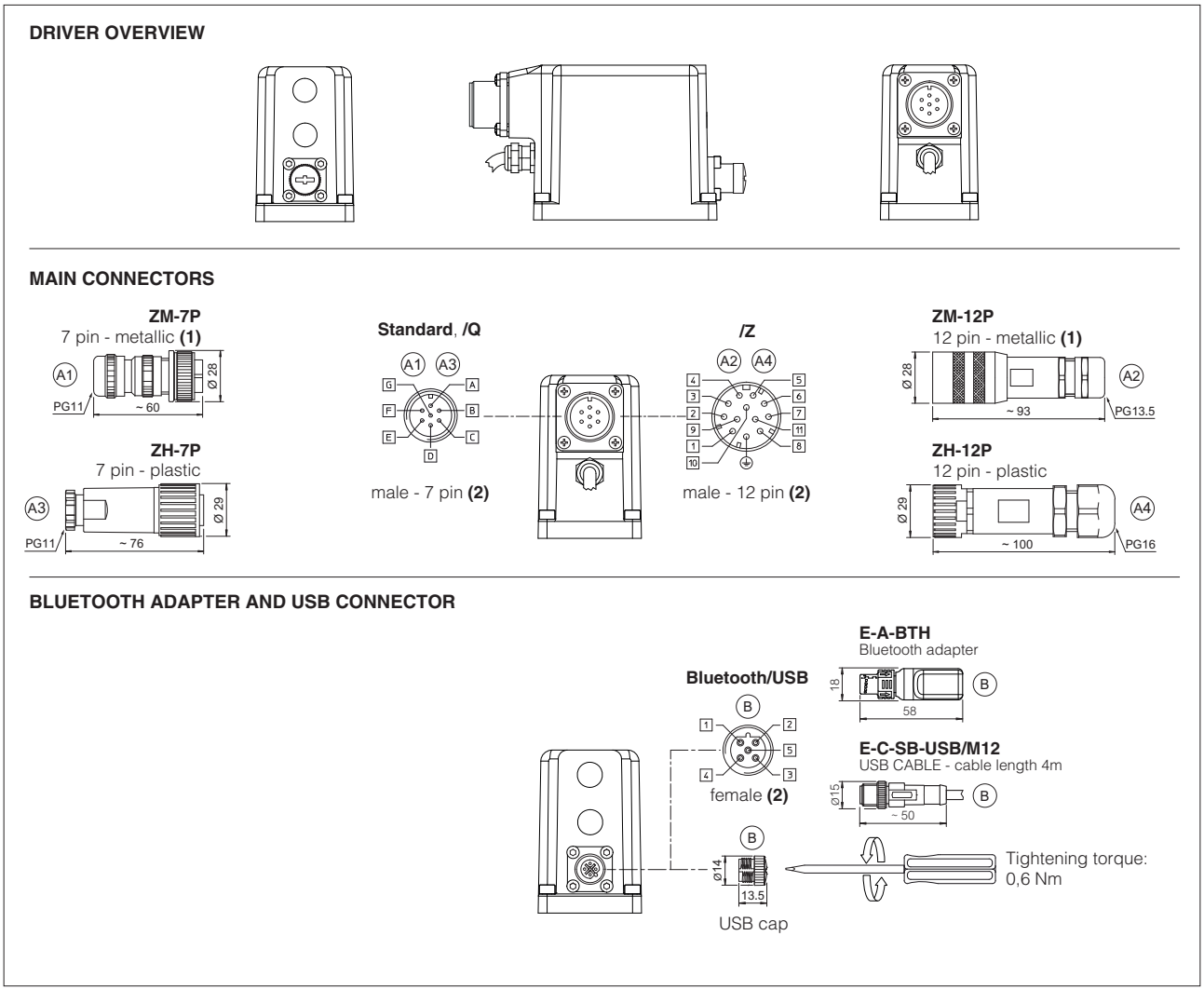

(1) Use of metallic connectors is strongly recommended in order to fulfill EMC requirements **(2)** Pin layout always referred to driver's view

20.8 REB-IL connections layout

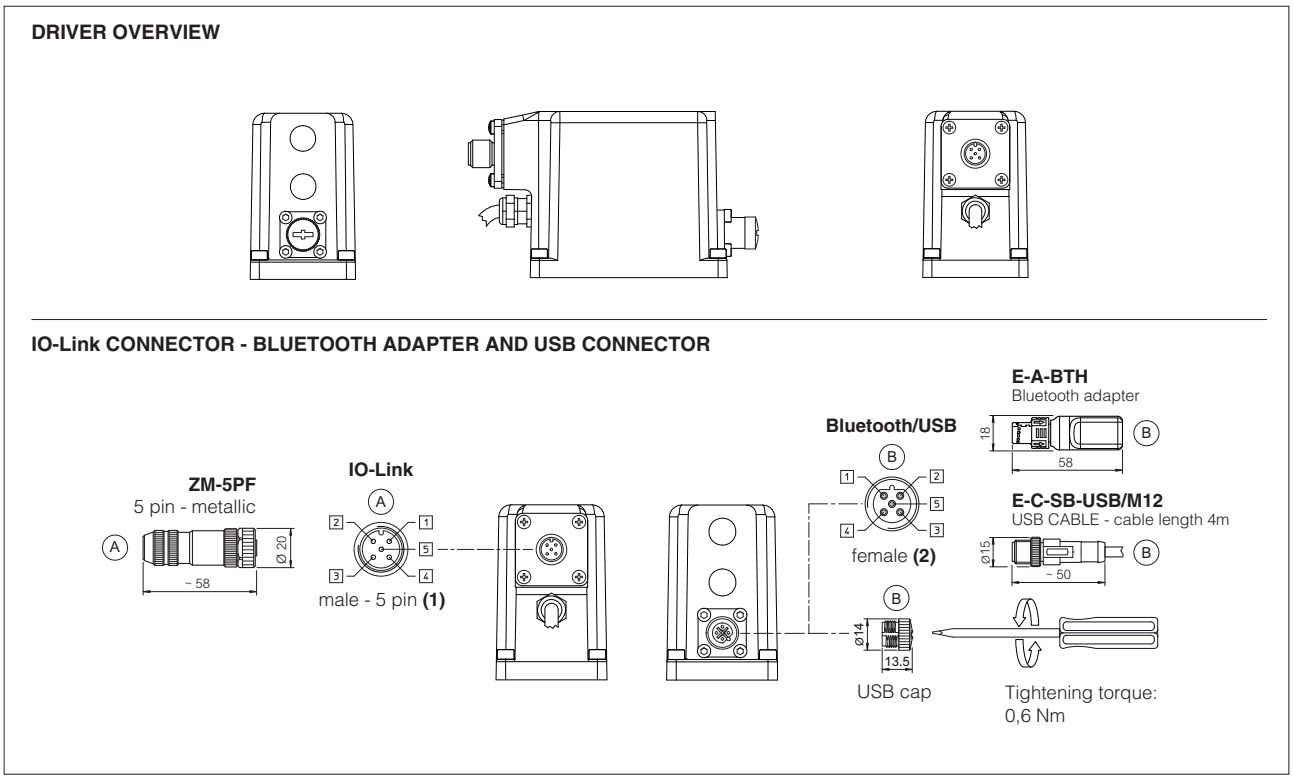

(1) Use of metallic connectors is strongly recommended in order to fulfill EMC requirements **(2)** Pin layout always referred to driver's view

20.9 RES connections layout

DRIVER OVERVIEW

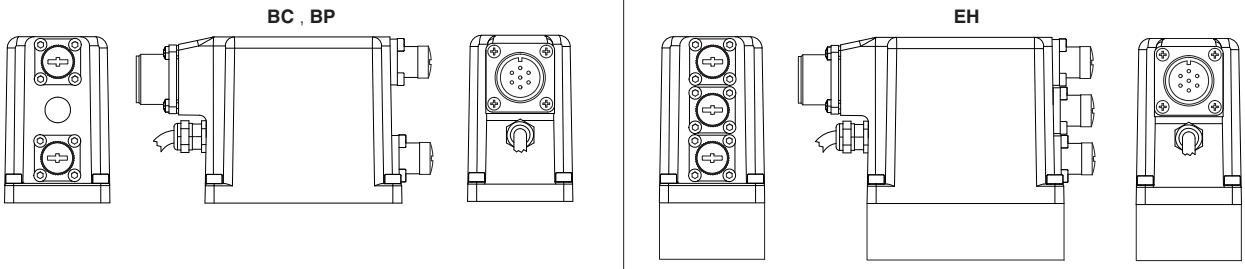

MAIN CONNECTORS

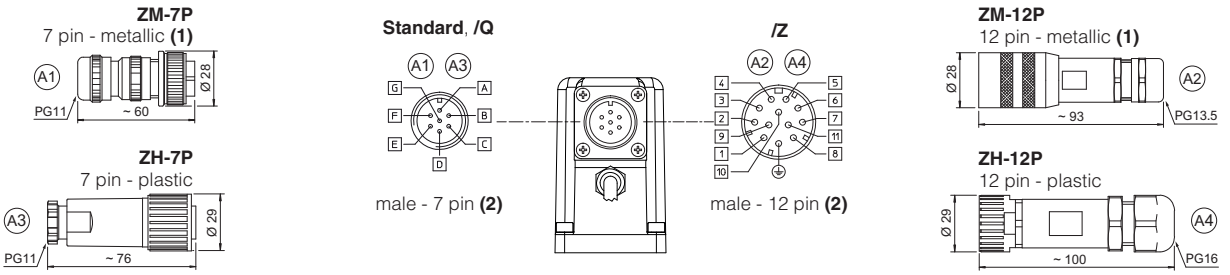

FIELDBUS CONNECTORS

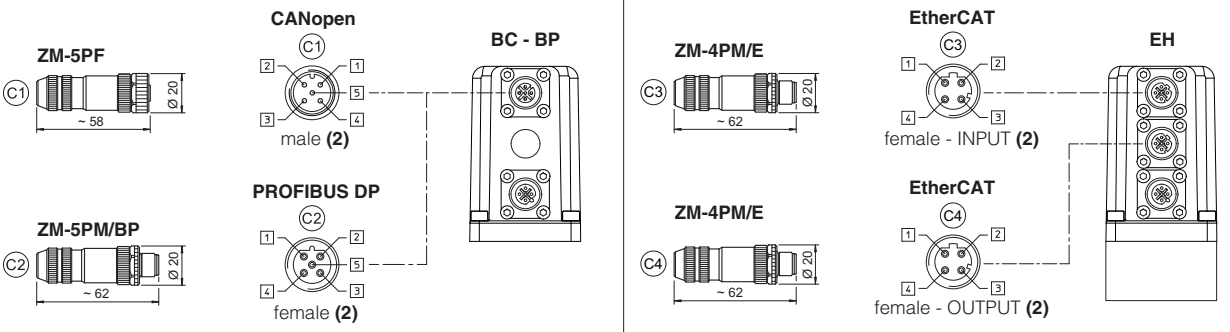

BLUETOOTH ADAPTER AND USB CONNECTOR

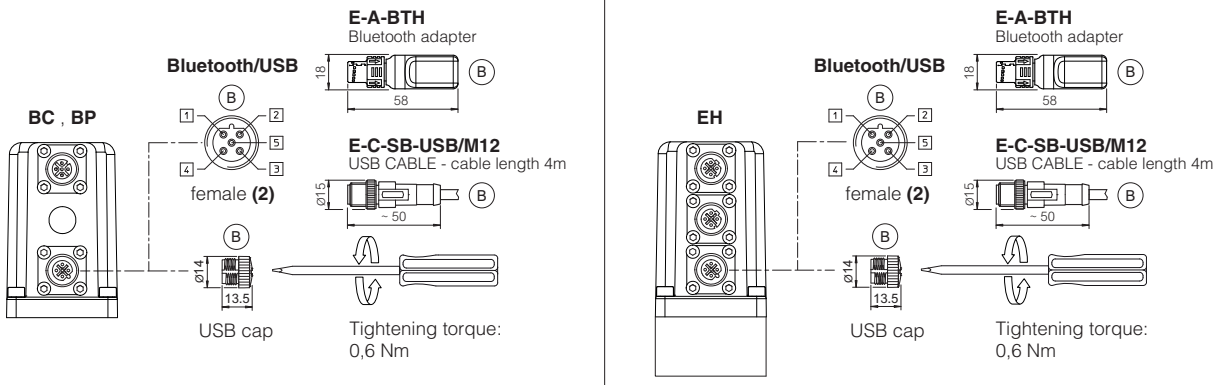

(1) Use of metallic connectors is strongly recommended in order to fulfill EMC requirements **(2)** Pin layout always referred to driver's view

21 CONNECTORS CHARACTERISTICS - to be ordered separately

21.1 Main connectors - 7 pin - for **REB-NP** and **RES**

CONNECTOR TYPE	POWER SUPPLY AND SIGNALS	POWER SUPPLY AND SIGNALS
CODE	(A1) ZM-7P	(A3) ZH-7P
Type	7pin female straight circular	7pin female straight circular
Standard	According to MIL-C-5015	According to MIL-C-5015
Material	Metallic	Plastic reinforced with fiber glass
Cable gland	PG11	PG11
Recommended cable	LiYCY 7 x 0,75 mm^2 max 20 m (logic and power supply) or LiYCY 7 x 1 mm^2 max 40 m (logic and power supply)	LiYCY 7 x 0,75 mm^2 max 20 m (logic and power supply) or LiYCY 7 x 1 mm^2 max 40 m (logic and power supply)
Conductor size	up to 1 mm^2 - available for 7 wires	up to 1 mm^2 - available for 7 wires
Connection type	to solder	to solder
Protection (EN 60529)	IP 67	IP 67

21.2 Main connectors - 12 pin - for **REB-NP** and **RES**

CONNECTOR TYPE	POWER SUPPLY AND SIGNALS	POWER SUPPLY AND SIGNALS
CODE	(A2) ZM-12P	(A4) ZH-12P
Type	12pin female straight circular	12pin female straight circular
Standard	DIN 43651	DIN 43651
Material	Metallic	Plastic reinforced with fiber glass
Cable gland	PG13,5	PG16
Recommended cable	LiYCY 12 x 0,75 mm^2 max 20 m (logic and power supply)	LiYCY 10 x 0,14mm^2 max 40 m (logic) LiYY 3 x 1mm^2 max 40 m (power supply)
Conductor size	0,5 mm^2 to 1,5 mm^2 - available for 12 wires	0,14 mm^2 to 0,5 mm^2 - available for 9 wires 0,5 mm^2 to 1,5 mm^2 - available for 3 wires
Connection type	to crimp	to crimp
Protection (EN 60529)	IP 67	IP 67

21.3 IO-Link connector - only for **REB-IL**

CONNECTOR TYPE	IL IO-Link
CODE	(A) ZM-5PF
Type	5pin female straight circular
Standard	M12 coding A – IEC 61076-2-101
Material	Metallic
Cable gland	Pressure nut - cable diameter 6÷8 mm
Recommended cable	5 x 0,75 mm^2 max 20 m
Connection type	screw terminal
Protection (EN 60529)	IP 67

21.4 Fieldbus communication connectors - only for **RES**

CONNECTOR TYPE	BC CANopen (1)		BP PROFIBUS DP (1)		EH EtherCAT (2)
CODE	(C1) ZM-5PF	(C2) ZM-5PM	(C1) ZM-5PF/BP	(C2) ZM-5PM/BP	(C1) (C2) ZM-4PM/E
Type	5 pin female straight circular	5 pin male straight circular	5 pin female straight circular	5 pin male straight circular	4 pin male straight circular
Standard	M12 coding A – IEC 61076-2-101		M12 coding B – IEC 61076-2-101		M12 coding D – IEC 61076-2-101
Material	Metallic		Metallic		Metallic
Cable gland	Pressure nut - cable diameter 6÷8 mm		Pressure nut - cable diameter 6÷8 mm		Pressure nut - cable diameter 4÷8 mm
Cable	CANbus Standard (DR 303-1)		PROFIBUS DP Standard		Ethernet standard CAT-5
Connection type	screw terminal		screw terminal		terminal block
Protection (EN 60529)	IP67		IP 67		IP 67

(1) E-TRM-** terminators can be ordered separately - see tech table **GS500**

(2) Internally terminated

22 FASTENING BOLTS AND SEALS

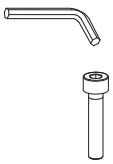	**Fastening bolts:** 4 socket head screws M5x50 class 12.9 Tightening torque = 8 Nm
	Seals: 4 OR 108 Diameter of ports P, A, T: Ø 7,5 mm Port B not used

23 INSTALLATION DIMENSIONS [mm]

ISO 4401: 2005
Mounting surface: 4401-03-02-0-05 (see table P005)

Mass [kg]		
R	**REB, RES**	**RES-EH**
3,0	3,5	3,6

RZGO-R-P

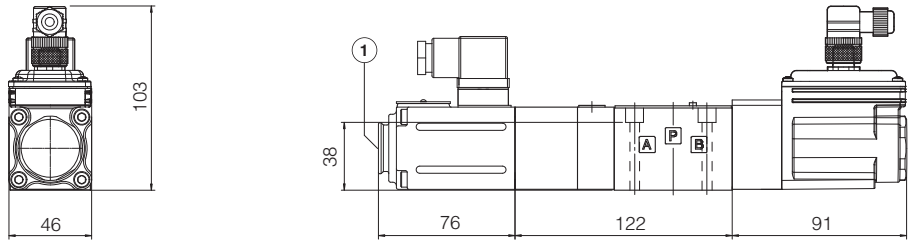

RZGO-REB-P-NP
RZGO-REB-P-IL

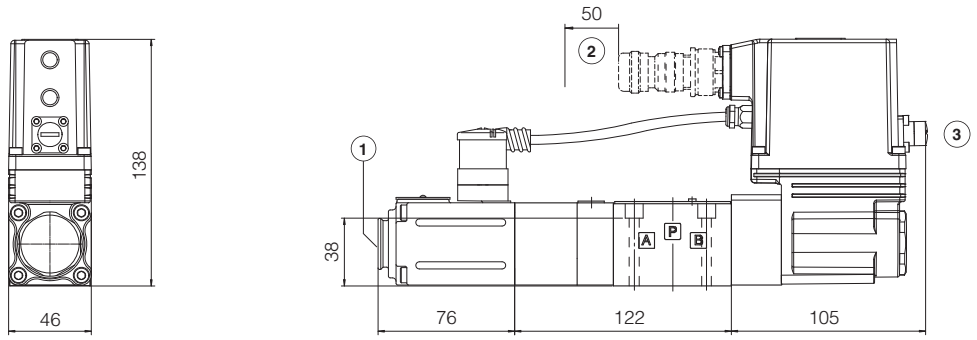

RZGO-RES-P-BP
RZGO-RES-P-BC

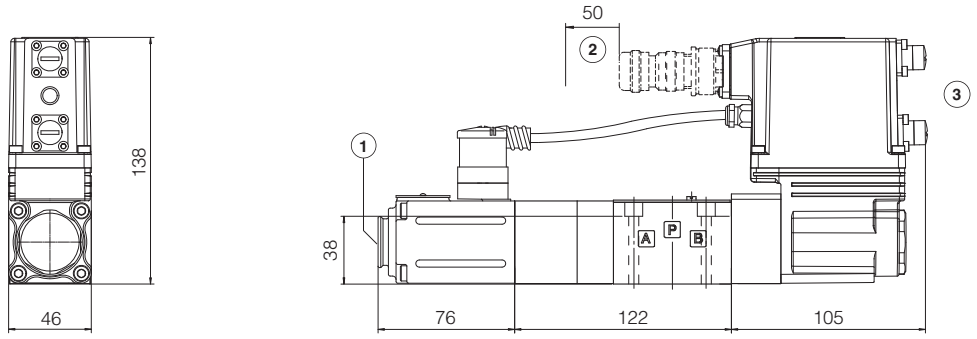

RZGO-RES-P-EH

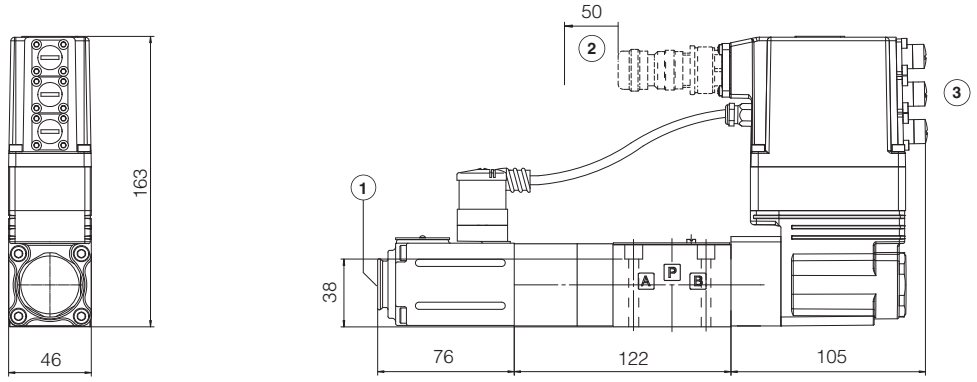

(1) = Air bleeding, see section 17

(2) = Space required for connection cable and for connector removal

(3) = The dimensions of connectors and Bluetooth adapter must be considered, see section 20.7, 20.8 and 20.9

24 RELATED DOCUMENTATION

FS001	Basics for digital electrohydraulics
FS900	Operating and maintenance information for proportional valves
GS203	E-BM-RES digital driver
GS500	Programming tools
GS510	Fieldbus
GS520	IO-Link interface
K800	Electric and electronic connectors
P005	Mounting surfaces for electrohydraulic valves
QB400	Quickstart for REB valves commissioning
QF400	Quickstart for RES valves commissioning
E-MAN-BM-RES	E-BM-RES user manual (off-board)
E-MAN-RI-REB	REB user manual
E-MAN-RI-RES	RES user manual

Proportional reducing valves high performance

piloted, with on-board pressure transducer

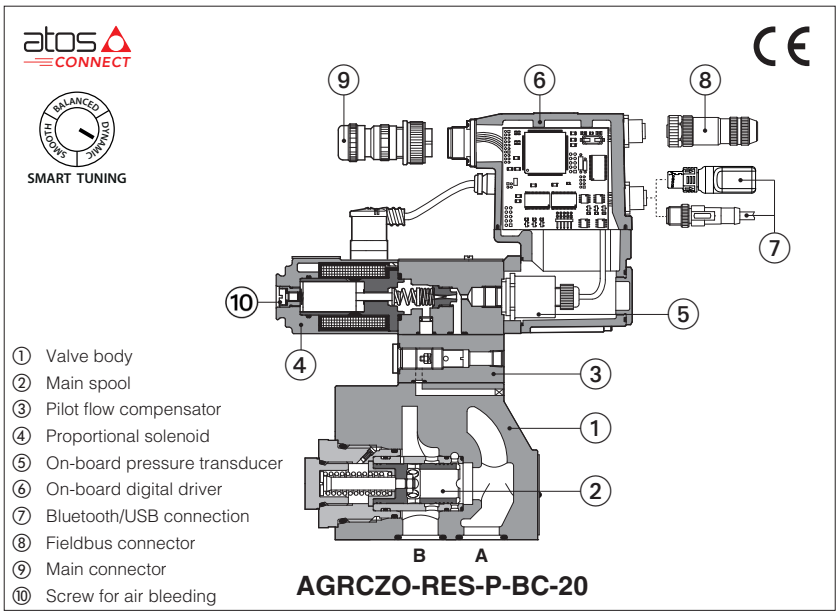

AGRCZO-RES-P-BC-20

AGRCZO-R, AGRCZO-REB, AGRCZO-RES

Piloted, digital proportional reducing valves with integral pressure transducer for pressure closed loop controls.

R without on-board digital driver, to be coupled with separated driver.

REB basic execution, with on-board digital driver, with analog reference signal or IO-Link interface for digital reference signals, valve settings, and real-time diagnostics.

RES full execution, with on-board digital driver which includes also fieldbus interfaces for digital reference signals, valve settings, and real-time diagnostics.

For **REB** and **RES**, Bluetooth/USB connection is always present for valve settings via mobile App and Atos PC software.

Size: **10** and **20** - ISO 5781
Max flow: **160** and **300 l/min**
Max pressure: **350 bar**

1 MODEL CODE

AGRCZO	-	RES	-	P	-	BC	-	10	/	315	/	*	/	*	/	*	/	*

AGRCZO: Proportional pressure reducing valve, piloted

RES:
R = off-board driver, see section 3
REB = basic on-board digital driver
RES = full on-board digital driver

P = with on-board pressure transducer

BC:
IO-Link interface, only for REB, see section 8 :
NP = Not present **IL** = IO-Link
Fieldbus interfaces, only for RES, see section 9 :
BC = CANopen **EH** = EtherCAT
BP = PROFIBUS DP

10: **Valve size** ISO 5781: **10, 20**

315: **Max regulated pressure**:
100 = 100 bar **210** = 210 bar **315** = 315 bar **350** = 350 bar

*****: **Hydraulic options (1)**:
P = with on-board mechanical pressure limiter
R = with on-board check valve for free reverse flow

*****: **Electronic options,** only for **REB-NP** and **RES (1)**:
I = current reference input and monitor 4 ÷ 20 mA
Q = enable signal
Z = double power supply, enable, fault and monitor signals - 12 pin connector

*****: **Bluetooth option,** only for **REB** and **RES (1)**, see section 6 :
T = Bluetooth adapter supplied with the valve

*****: Series number

*****: **Seals material,** see section 13 :
- = NBR
PE = FKM
BT = NBR low temp.

(1) For possible combined options, see section 17

2 HYDRAULIC SYMBOLS

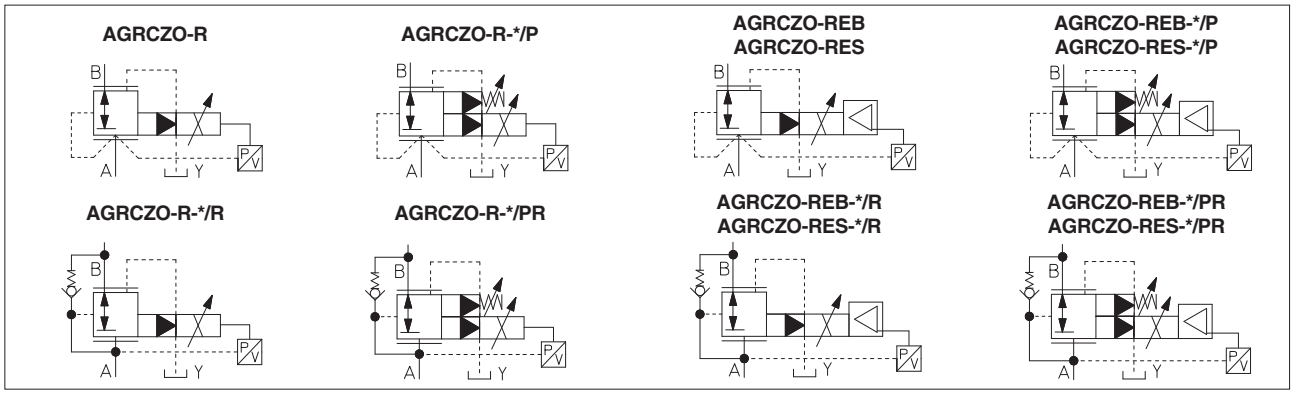

3 OFF-BOARD ELECTRONIC DRIVER - only for **R**

Drivers model	E-BM-RES
Type	Digital
Format	DIN rail panel format
Tech table	GS203

4 GENERAL NOTES

Atos digital proportionals valves are CE marked according to the applicable directives (e.g. Immunity and Emission EMC Directive).
Installation, wirings and start-up procedures must be performed according to the general prescriptions shown in tech table **FS900** and in the user manuals included in the E-SW-SETUP programming software.

5 VALVE SETTINGS AND PROGRAMMING TOOLS - see tech. table **GS500**

5.1 Atos CONNECT mobile App

Free downloadable App for smartphones and tablets which allows quick access to valve main functional parameters and basic diagnostic information via Bluetooth, thus avoiding physical cable connection and significantly reducing commissioning time.
Atos CONNECT supports Atos digital valve drivers equipped with E-A-BTH adapter or with built-in Bluetooth. It does not support valves with p/Q control or axis controls.

Download on the App Store

GET IT ON Google Play

5.2 E-SW-SETUP PC software

Free downloadable software for PC allows to set all valve functional parameters and to access complete diagnostic information of digital valve drivers via Bluetooth/USB service port.
Atos E-SW-SETUP PC software supports all Atos digital valve drivers and it is available at www.atos.com in MyAtos area.

WARNING: drivers USB port is not isolated! For E-C-SB-USB/M12 cable, the use of E-A-SB-USB/OPT isolator adapter is highly recommended for PC protection

Bluetooth or USB connection

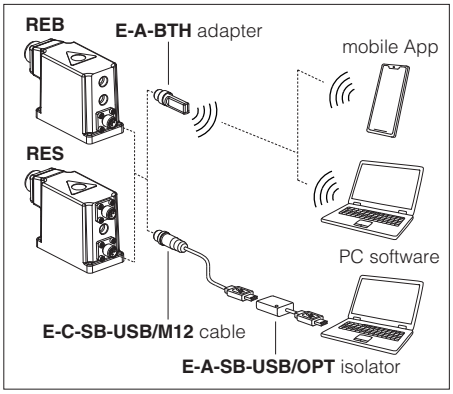

6 BLUETOOTH OPTION - see tech. table **GS500**

T option adds Bluetooth® connectivity to Atos valve drivers thanks to E-A-BTH adapter, which can be left permanently installed on-board, to allow the Bluetooth connection with the valve drivers at any time. E-A-BTH adapter can also be purchased separately and used to connect with any supported Atos digital product.
Bluetooth connection to the valve can be protected against unauthorised access by setting a personal password. The adapter leds visually indicates the status of valve driver and Bluetooth connection.

WARNING: for the list of countries where the Bluetooth adapter has been approved, see tech. table **GS500**
T option is not available for the Indian market, so the Bluetooth adapter must be ordered separately.

7 SMART TUNING

Smart tuning allows to adjust the valve dynamic response in order to match different hydraulic conditions and performance requirements.

The valve is provided with 3 factory settings for the pressure control:

- **dynamic** fast response time for best dynamic performances. Default factory setting for pressure valves
- **balanced** average response time suitable for major applications
- **smooth** attenuated response time for slow regulation without overshoots

Smart tuning setting can be switched from Dynamic (default) to Balanced or Smooth via software or fieldbus; if requested, performances can be further customized directly tuning each single control parameter. For details consult related manuals E-MAN-* and Quickstart, see section 27.

Below indications have to be considered as a general guideline, being affected by hydraulic circuit stiffness, working flow and dead volume.

High stiffness - Low flow - Small volume

1 = dynamic
2 = balanced
3 = smooth

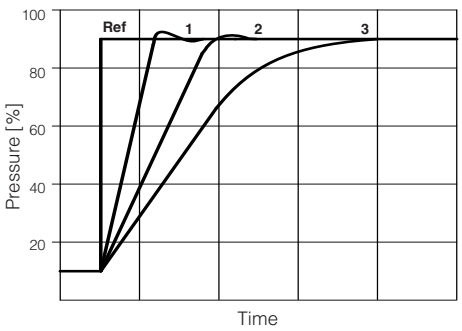

Low stiffness - High flow - Large volume

1 = dynamic
2 = balanced
3 = smooth

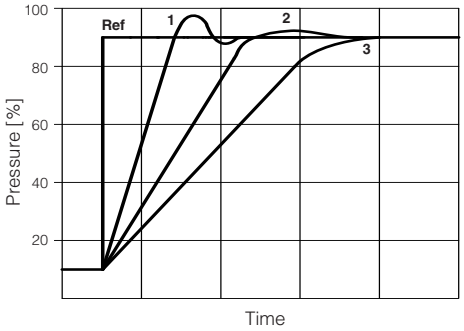

8 IO-LINK - only for **REB**, see tech. table **GS520**

IO-Link allows low cost digital communication between the valve and machine central unit. The valve is directly connected to a port of an IO-Link master (point-to-point connection) via low-cost unshielded cables for digital reference, diagnostic and settings. The IO-Link master works as a hub exchanging this information with the machine central unit via fieldbus.

9 FIELDBUS - only for **RES**, see tech. table **GS510**

Fieldbus allows valve direct communication with machine control unit for digital reference, valve diagnostics and settings. These execution allow to operate the valves through fieldbus or analog signals available on the main connector.

10 GENERAL CHARACTERISTICS

Assembly position	Any position
Subplate surface finishing to ISO 4401	Acceptable roughness index: Ra ≤ 0,8, recommended Ra 0,4 – Flatness ratio 0,01/100
MTTFd valves according to EN ISO 13849	75 years, for further details see technical table P007
Ambient temperature range	**R:** **Standard** = -20°C ÷ +70°C **/PE** option = -20°C ÷ +70°C **/BT** option = -40°C ÷ +60°C **REB, RES:** **Standard** = -20°C ÷ +60°C **/PE** option = -20°C ÷ +60°C **/BT** option = -40°C ÷ +60°C
Storage temperature range	**R:** **Standard** = -20°C ÷ +80°C **/PE** option = -20°C ÷ +80°C **/BT** option = -40°C ÷ +70°C **REB, RES:** **Standard** = -20°C ÷ +70°C **/PE** option = -20°C ÷ +70°C **/BT** option = -40°C ÷ +70°C
Surface protection	Zinc coating with black passivation, galvanic treatment (driver housing for REB and RES)
Corrosion resistance	Salt spray test (EN ISO 9227) > 200 h
Vibration resistance	See technical table G004 (for REB and RES)
Compliance	CE according to EMC directive 2014/30/EU (Immunity: EN 61000-6-2; Emission: EN 61000-6-3) RoHS Directive 2011/65/EU as last update by 2015/863/EU REACH Regulation (EC) n°1907/2006

11 HYDRAULIC CHARACTERISTICS - based on mineral oil ISO VG 46 at 50 °C

Valve model		**AGRCZO-*-10**	**AGRCZO-*-20**
Max regulated pressure	[bar]	100; 210; 315; 350	
Min regulated pressure	[bar]	1; 3 (only for /350)	
Max pressure at port A or B	[bar]	350	
Max pressure at port Y	[bar]	pilot drain always external, to be directly connected to tank at zero pressure	
Max flow	[l/min]	160	300
Response time 0-100% step signal (depending on installation) **(1)**	[ms]	≤ 45	≤ 50
Hysteresis		≤ 0,5 [% of max pressure]	
Linearity		≤ 1,0 [% of max pressure]	
Repeatability		≤ 0,2 [% of max pressure]	
Thermal drift		zero point displacement < 1% at ΔT = 40°C	

Note: above performance data refer to valves coupled with Atos electronic drivers, see section 3

(1) Average response time value; the pressure variation in consequence of a modification of the reference input signal to the valve is affected by the stiffness of the hydraulic circuit: greater is the stiffness of the circuit, faster is the dynamic response, see section 7

12 ELECTRICAL CHARACTERISTICS

Power supplies	Nominal : +24 VDC Rectified and filtered : VRMS = 20 ÷ 32 VMAX (ripple max 10 % VPP)				
Max power consumption	**R** = 30 W **REB**, **RES** = 50 W				
Max. solenoid current	3 A				
Coil resistance R at 20°C	3 ÷ 3,3 Ω				
Analog input signals	Voltage: range ±10 VDC (24 VMAX tolerant) Input impedance: Ri > 50 kΩ Current: range ±20 mA Input impedance: Ri = 500 Ω				
Monitor output	Voltage: maximum range 0 ÷ 10 VDC @ max 5 mA Current: maximum range 0 ÷ 20 mA @ max 500 Ω load resistance				
Enable input	Range: 0 ÷ 9 VDC (OFF state), 15 ÷ 24 VDC (ON state), 9 ÷ 15 VDC (not accepted); Input impedance: Ri > 87 kΩ				
Fault output	Output range : 0 ÷ 24 VDC (ON state ≅ VL+ [logic power supply] ; OFF state ≅ 0 V) @ max 50 mA; external negative voltage not allowed (e.g. due to inductive loads)				
Pressure transducer **(1)**	E-ATR-8/*/I Output signal: 4 ÷ 20 mA (see tech table **GS465**)				
Alarms	Solenoid not connected/short circuit, cable break with current reference signal, over/under temperature, current control monitoring, power supplies level, pressure transducer failure				
Insulation class	H (180°) Due to the occurring surface temperatures of the solenoid coils, the European standards ISO 13732-1 and EN982 must be taken into account				
Protection degree to DIN EN60529	**R** = IP65; **REB**, **RES** = IP66 / IP67 with mating connectors				
Duty factor	Continuous rating (ED=100%)				
Tropicalization	Tropical coating on electronics PCB				
Additional characteristics	Short circuit protection of solenoid's current supply; current control by P.I.D. with rapid solenoid switching; protection against reverse polarity of power supply				
Communication interface	USB Atos ASCII coding	IO-Link Interface and System Specification 1.1.3	CANopen EN50325-4 + DS408	PROFIBUS DP EN50170-2/IEC61158	EtherCAT IEC 61158
Communication physical layer	not insulated USB 2.0+USB OTG	SDCI class port B	optical insulated CAN ISO11898	optical insulated RS485	Fast Ethernet, insulated 100 Base TX
Recommended wiring cable	LiYCY shielded cables, see section 22				

(1) In case of pressure transducer failure, the valve's reaction can be configured through Atos E-SW-SETUP software to:
- cut off the current to solenoid, therefore the regulated pressure will be reduced to minimum value (default setting)
- automatically switch the pressure control from closed loop (dynamic, balanced, smooth) to open loop, to let the valve to temporarily operate with reduced regulation accuracy

Note: a maximum time of 500 ms (depending on communication type) has to be considered between the driver energizing with the 24 VDC power supply and when the valve is ready to operate. During this time the current to the valve coils is switched to zero.

13 SEALS AND HYDRAULIC FLUIDS - for other fluids not included in below table, consult our technical office

Seals, recommended fluid temperature	NBR seals (standard) = -20°C ÷ +60°C (+80°C for **R**), with HFC hydraulic fluids = -20°C ÷ +50°C FKM seals (/PE option) = -20°C ÷ +80°C NBR low temp. seals (/BT option) = -40°C ÷ +60°C, with HFC hydraulic fluids = -20°C ÷ +50°C		
Recommended viscosity	20 ÷ 100 mm²/s - max allowed range 15 ÷ 380 mm²/s		
Max fluid contamination level — normal operation	ISO4406 class 18/16/13 NAS1638 class 7		see also filter section at www.atos.com or KTF catalog
Max fluid contamination level — longer life	ISO4406 class 16/14/11 NAS1638 class 5		
Hydraulic fluid	**Suitable seals type**	**Classification**	**Ref. Standard**
Mineral oils	NBR, FKM, NBR low temp.	HL, HLP, HLPD, HVLP, HVLPD	DIN 51524
Flame resistant without water	FKM	HFDU, HFDR	ISO 12922
Flame resistant with water	NBR, NBR low temp.	HFC	

14 DIAGRAMS (based on mineral oil ISO VG 46 at 50 °C)

1 Regulation diagrams
with flow rate Q = 10 l/min

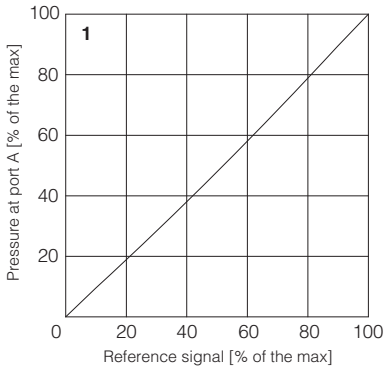

2 Pressure/flow diagrams
with reference pressure set with Q = 10 l/min

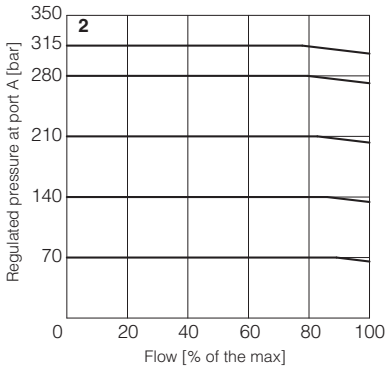

3-6 Pressure drop/flow diagrams
with zero reference signal

Differential pressure B→A
3 = AGRCZO-*-10
4 = AGRCZO-*-20

Differential pressure A→B (through check valve)
5 = AGRCZO-*-10/*/R
6 = AGRCZO-*-20/*/R

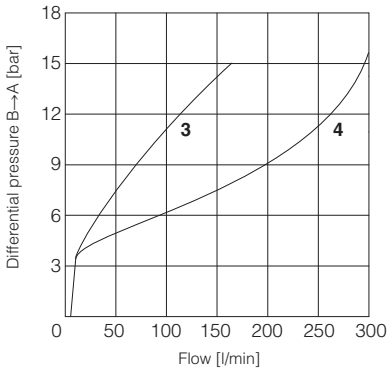

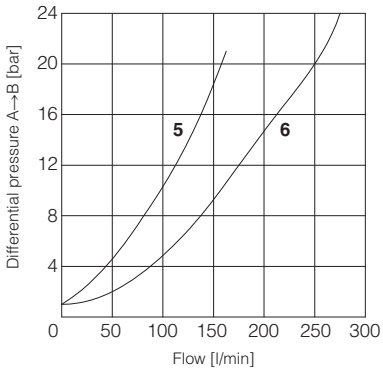

15 HYDRAULIC OPTIONS

P = This option provides a mechanical pressure limiter acting as protection against overpressure. For safety reasons the factory setting of the mechanical pressure limiter is fully unloaded (min pressure).
At the first commissioning it must be set at a value lightly higher than the max pressure regulated with the proportional control.
For the pressure setting of the mechanical pressure limiter, proceed according to following steps:

- apply the max reference input signal to the valve's driver. The system pressure will not increase until the mechanical pressure limiter remains unloaded
- turn clockwise the adjustment screw ① until the system pressure will increase up to a stable value corresponding to the pressure setpoint at max reference input signal
- turn clockwise the adjustment screw ① of additional 1 or 2 turns to ensure that the mechanical pressure limiter remains closed during the proportional valve working

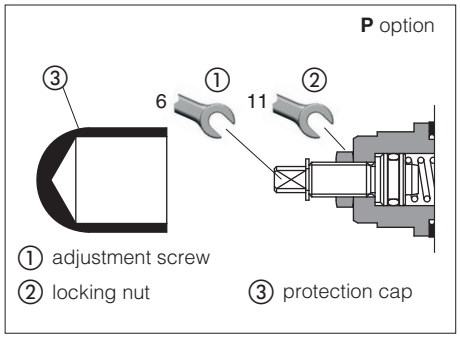

R = This option provides a integral check valve for free reverse flow A→B

① Check valve - cracking pressure = 0,5 bar

② Plug

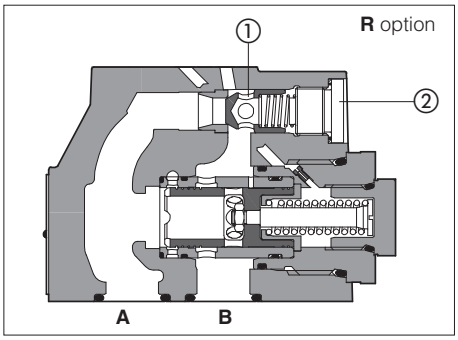

16 ELECTRONIC OPTIONS - only for **REB-NP** and **RES**

I = This option provides 4 ÷ 20 mA current reference and monitor signals, instead of the standard 0 ÷ 10 VDC. Input signal can be reconfigured via software selecting between voltage and current, within a maximum range of ±10 VDC or ±20 mA.
It is normally used in case of long distance between the machine control unit and the valve or where the reference signal can be affected by electrical noise; the valve functioning is disabled in case of reference signal cable breakage.

Q = This option permits to inhibit the valve function without removing the power supply to the driver. Upon disable command the current to the solenoid is zeroed and the valve's spool moves to rest position.
The option /Q is suggested for all cases where the valve has to be frequently inhibited during the machine cycle – see 19.5 for signal specifications.

Z = This option provides, on the 12 pin main connector, the following additional features:
Fault output signal - see 19.6
Enable input signal - see above option /Q
Power supply for driver's logics and communication - see 19.2

17 POSSIBLE COMBINED OPTIONS

for **R**: /PR

for **REB** and **RES**: /IP, /IQ, /IR, /IZ, /PQ, /PR, /PZ, /QR, /RZ, /IPQ, /IPR, /IPZ, /IQR, /IRZ, /PQR, /PRZ, /IPQR, /IPRZ

Note: **/T** Bluetooth adapter option can be combined with all other options

18 AIR BLEEDING

At the first valve commissioning the air eventually trapped inside the solenoid must be bled-off through the screw ① located at the rear side of the solenoid housing.
The presence of air may cause pressure instability and vibrations.

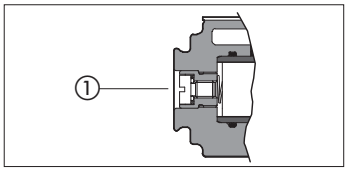

19 POWER SUPPLY AND SIGNALS SPECIFICATIONS - only for **REB-NP** and **RES**

Generic electrical output signals of the valve (e.g. fault or monitor signals) must not be directly used to activate safety functions, like to switch-ON/OFF the machine's safety components, as prescribed by the European standards (Safety requirements of fluid technology systems and components-hydraulics, ISO 4413).

For **REB-IL** signals see section 20

19.1 Power supply (V+ and V0)

The power supply must be appropriately stabilized or rectified and filtered: apply at least a 10000 μF/40 V capacitance to single phase rectifiers or a 4700 μF/40 V capacitance to three phase rectifiers. In case of separate power supply see 19.2.

⚠ A safety fuse is required in series to each power supply: 2,5 A time lag fuse.

19.2 Power supply for driver's logic and communication (VL+ and VL0) - only for **/Z** option

The power supply for driver's logic and communication must be appropriately stabilized or rectified and filtered: apply at least a 10000 μF/40 V capacitance to single phase rectifiers or a 4700 μF/40 V capacitance to three phase rectifiers.
The separate power supply for driver's logic on pin 9 and 10, allow to remove solenoid power supply from pin 1 and 2 maintaining active the diagnostics, USB and fieldbus communications.

⚠ A safety fuse is required in series to each driver's logic and communication power supply: 500 mA fast fuse.

19.3 Pressure reference input signal (P_INPUT+)

The driver controls in closed loop the current to the valve pressure proportionally to the external reference input signal.
Reference input signal is factory preset according to selected valve code, defaults are 0 ÷ 10 VDC for standard and 4 ÷ 20 mA for /I option.
Input signal can be reconfigured via software selecting between voltage and current, within a maximum range of ±10 VDC or ± 20 mA.
Drivers with fieldbus interface (BC, BP, EH) can be software set to receive reference signal directly by the machine control unit (fieldbus reference).
Analog reference input signal can be used as on-off commands with input range 0 ÷ 24 VDC.

19.4 Pressure monitor output signal (P_MONITOR)

The driver generates an analog output signal proportional to the actual pressure of the valve; the monitor output signal can be software set to show other signals available in the driver (e.g. analog reference, fieldbus reference).
Monitor output signal is factory preset according to selected valve code, defaults settings are 0 ÷10 VDC for standard and 4 ÷ 20 mA for /I option.
Output signal can be reconfigured via software selecting between voltage and current, within a maximum range of 0 ÷10 VDC or 0 ÷ 20 mA.

19.5 Enable input signal (ENABLE) - not for standard

To enable the driver, supply a 24 VDC on pin 3 (pin C): Enable input signal allows to enable/disable the current supply to the solenoid, without removing the electrical power supply to the driver; it is used to active the communication and the other driver functions when the valve must be disabled for safety reasons. This condition **does not comply** with norms IEC 61508 and ISO 13849.
Enable input signal can be used as generic digital input by software selection.

19.6 Fault output signal (FAULT) - only for **/Z** option

Fault output signal indicates fault conditions of the driver (solenoid short circuits/not connected, reference signal broken for 4 ÷ 20 mA input, etc.).
Fault presence corresponds to 0 VDC, normal working corresponds to 24 VDC. Fault status is not affected by the Enable input signal.

20 IO-LINK SIGNALS SPECIFICATIONS - only for **REB-IL**

20.1 Power supply for IO-Link communication (L+ and L-)

The IO-Link master provides dedicated 24 VDC power supply for IO-Link communication.
Maximum power consumption: 2 W
Internal electrical isolation of power L+, L- from P24, N24

20.2 Power supply for driver's logic and valve regulation (P24 and N24)

The IO-Link master provides dedicated 24 VDC power supply for valve regulation, logics and diagnostics.
Maximum power consumption: 50 W
Internal electrical isolation of power P24, N24 from L+, L-

20.3 IO-Link data line (C/Q)

C/Q signal is used to establish communication between IO-Link master and valve.

21 ELECTRONIC CONNECTIONS

21.1 Main connector signals - 7 pin (A1) Standard and /Q option - for REB-NP and RES

PIN	Standard	/Q	TECHNICAL SPECIFICATIONS	NOTES
A	**V+**		Power supply 24 VDC	Input - power supply
B	**V0**		Power supply 0 VDC	Gnd - power supply
C	**AGND**		Analog ground	Gnd - analog signal
		ENABLE	Enable (24 VDC) or disable (0 VDC) the driver, referred to V0	Input - on/off signal
D	**P_INPUT+**		Pressure reference input signal: ±10 VDC / ±20 mA maximum range Defaults are 0 ÷ 10 VDC for standard and 4 ÷ 20 mA for /I option	Input - analog signal **Software selectable**
E	**INPUT-**		Negative reference input signal for P_INPUT+	Input - analog signal
F	**P_MONITOR** referred to: AGND	V0	Pressure monitor output signal: 0 ÷ 10 VDC / 0 ÷ 20 mA maximum range Defaults are 0 ÷ 10 VDC for standard and 4 ÷ 20 mA for /I option	Output - analog signal **Software selectable**
G	**EARTH**		Internally connected to driver housing	

21.2 Main connector signals - 12 pin (A2) /Z option - for REB-NP and RES

PIN	/Z	TECHNICAL SPECIFICATIONS	NOTES
1	**V+**	Power supply 24 VDC	Input - power supply
2	**V0**	Power supply 0 VDC	Gnd - power supply
3	**ENABLE**	Enable (24 VDC) or disable (0 VDC) the driver, referred to VL0	Input - on/off signal
4	**P_INPUT+**	Pressure reference input signal: ±10 VDC / ±20 mA maximum range Defaults are 0 ÷ 10 VDC for standard and 4 ÷ 20 mA for /I option	Input - analog signal **Software selectable**
5	**INPUT-**	Negative reference input signal for INPUT+	Input - analog signal
6	**P_MONITOR**	Pressure monitor output signal: 0 ÷ 10 VDC / 0 ÷ 20 mA maximum range, referred to VL0 Defaults are 0 ÷ 10 VDC for standard and 4 ÷ 20 mA for /I option	Output - analog signal **Software selectable**
7	**NC**	Do not connect	
8	**NC**	Do not connect	
9	**VL+**	Power supply 24 VDC for driver's logic and communication	Input - power supply
10	**VL0**	Power supply 0 VDC for driver's logic and communication	Gnd - power supply
11	**FAULT**	Fault (0 VDC) or normal working (24 VDC), referred to VL0	Output - on/off signal
PE	**EARTH**	Internally connected to driver housing	

Note: do not disconnect VL0 before VL+ when the driver is connected to PC USB port

21.3 IO-Link connector signals - M12 - 5 pin - Coding A, port class B (A) only for REB-IL

PIN	SIGNAL	TECHNICAL SPECIFICATIONS	NOTES
1	**L+**	Power supply 24 VDC for IO-Link communication	Input - power supply
2	**P24**	Power supply 24 VDC for valve regulation, logics and diagnostics	Input - power supply
3	**L-**	Power supply 0 VDC for IO-Link communication	Gnd - power supply
4	**C/Q**	IO-Link data line	Input / Output - signal
5	**N24**	Power supply 0 VDC for valve regulation, logics and diagnostics	Gnd - power supply

Note: L+, L- and P24, N24 are electrically isolated

21.4 Communication connectors - for REB (B) and RES (B) - (C)

(B) **USB connector - M12 - 5 pin** always present

PIN	SIGNAL	TECHNICAL SPECIFICATION (1)
1	**+5V_USB**	Power supply
2	**ID**	Identification
3	**GND_USB**	Signal zero data line
4	**D-**	Data line -
5	**D+**	Data line +

(C1) **BC fieldbus execution, connector - M12 - 5 pin (2)**

PIN	SIGNAL	TECHNICAL SPECIFICATION (1)
1	**CAN_SHLD**	Shield
2	**NC**	do not connect
3	**CAN_GND**	Signal zero data line
4	**CAN_H**	Bus line (high)
5	**CAN_L**	Bus line (low)

(C2) **BP fieldbus execution, connector - M12 - 5 pin (2)**

PIN	SIGNAL	TECHNICAL SPECIFICATION (1)
1	**+5V**	Termination supply signal
2	**LINE-A**	Bus line (high)
3	**DGND**	Data line and termination signal zero
4	**LINE-B**	Bus line (low)
5	**SHIELD**	

(C3) (C4) **EH fieldbus execution, connector - M12 - 4 pin (2)**

PIN	SIGNAL	TECHNICAL SPECIFICATION (1)
1	**TX+**	Transmitter
2	**RX+**	Receiver
3	**TX-**	Transmitter
4	**RX-**	Receiver
Housing	**SHIELD**	

(1) Shield connection on connector's housing is recommended

(2) Only for **RES** execution

21.5 Solenoid connection - only for R

PIN	SIGNAL	TECHNICAL SPECIFICATION	Connector code 666
1	**COIL**	Power supply	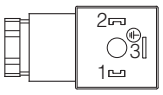
2	**COIL**	Power supply	
3	**GND**	Ground	

21.6 Pressure transducer connection - only for R

PIN	SIGNAL	TECHNICAL SPECIFICATION	Connector code ZBE-08
1	**V+**	Power supply	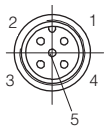
2	**NC**	Not connected	
3	**TR**	Output signal 4 ÷ 20 mA	
4	**NC**	Not connected	
5	**NC**	Not connected	

21.7 REB-NP connections layout

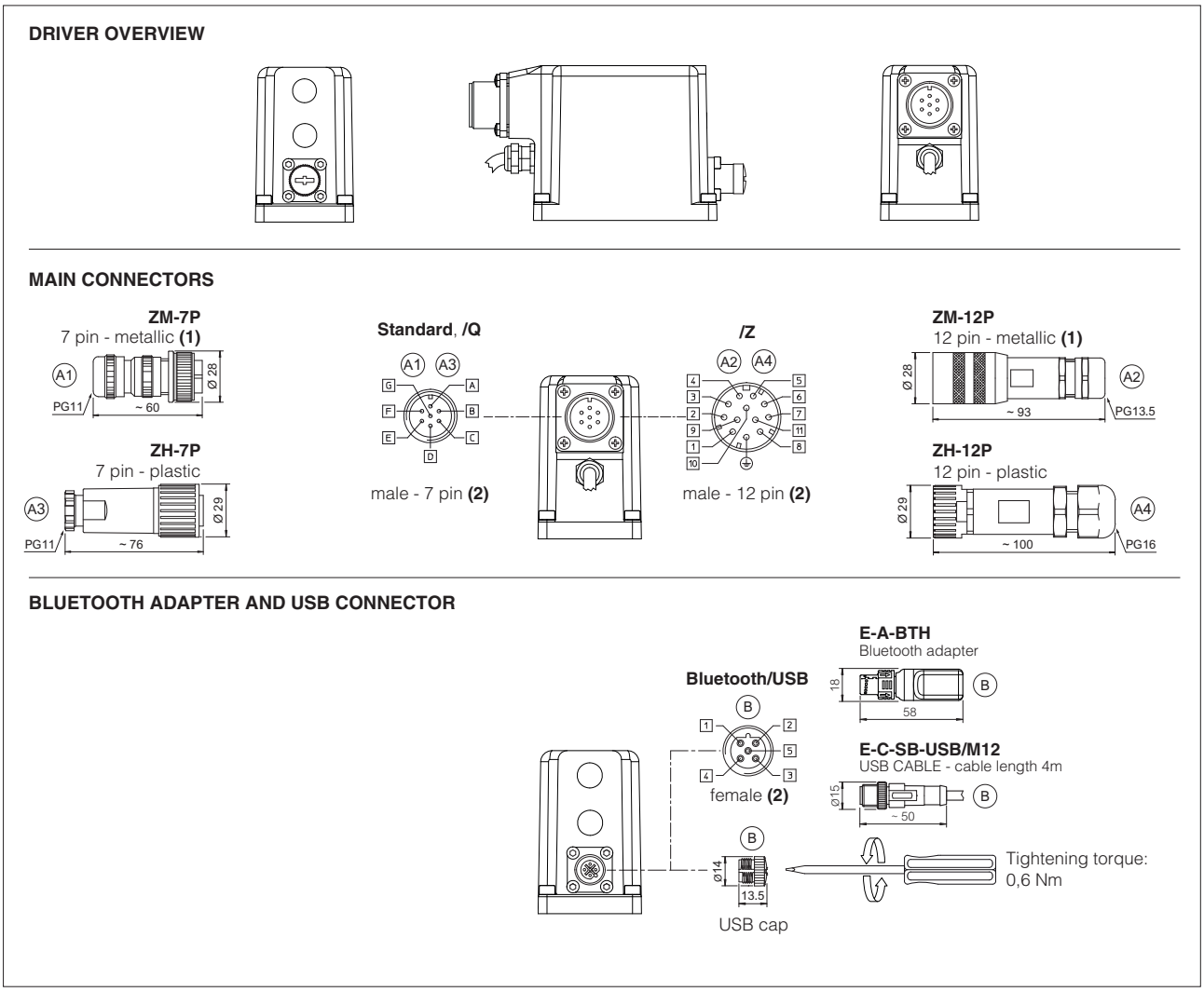

(1) Use of metallic connectors is strongly recommended in order to fulfill EMC requirements **(2)** Pin layout always referred to driver's view

21.8 REB-IL connections layout

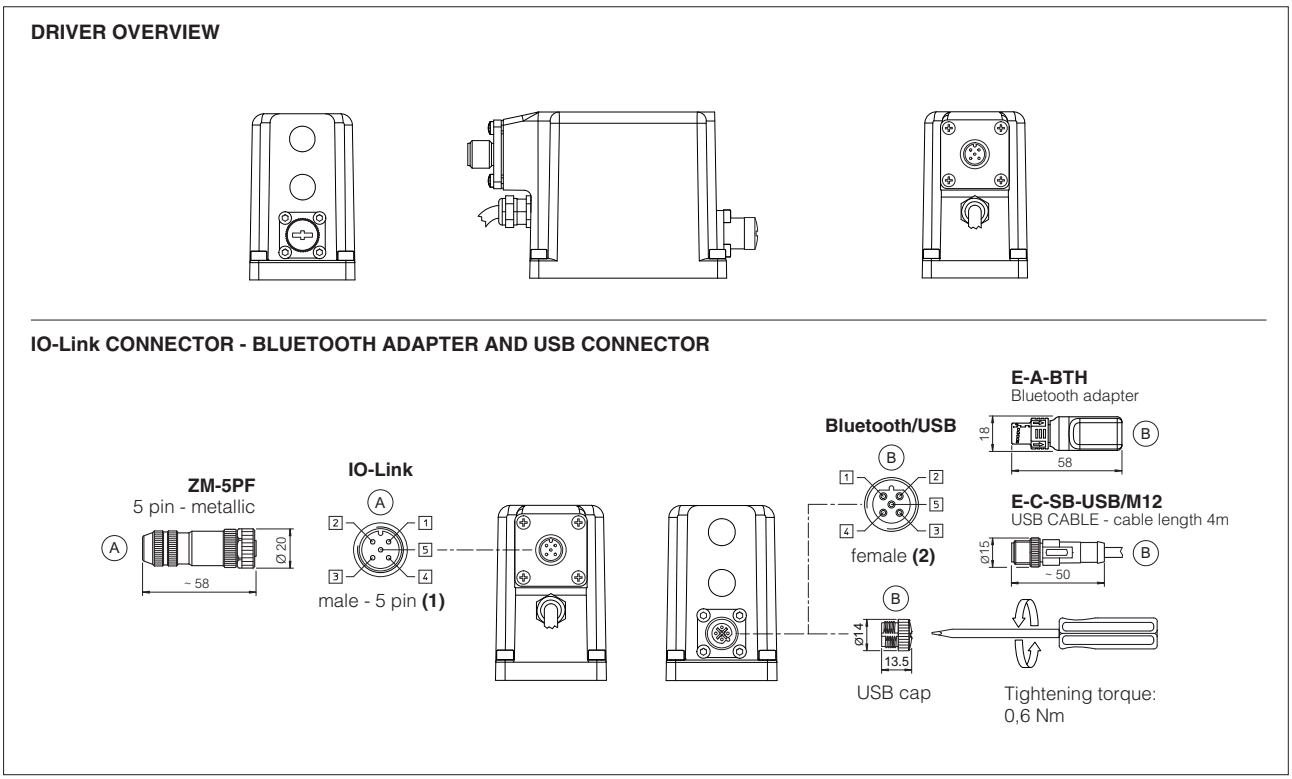

(1) Use of metallic connectors is strongly recommended in order to fulfill EMC requirements **(2)** Pin layout always referred to driver's view

21.9 RES connections layout

DRIVER OVERVIEW

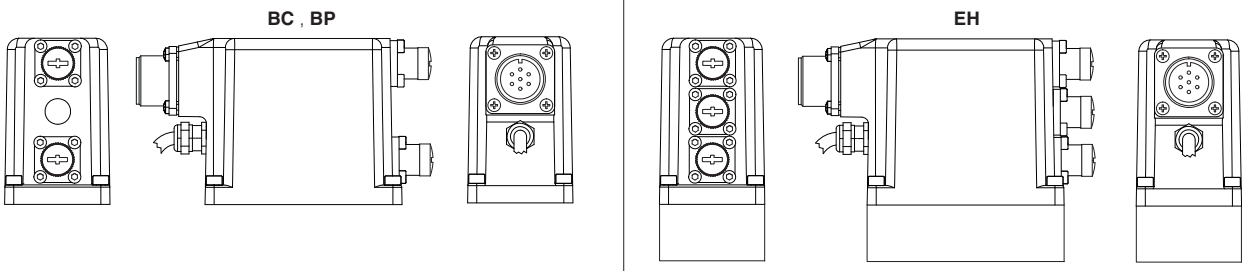

MAIN CONNECTORS

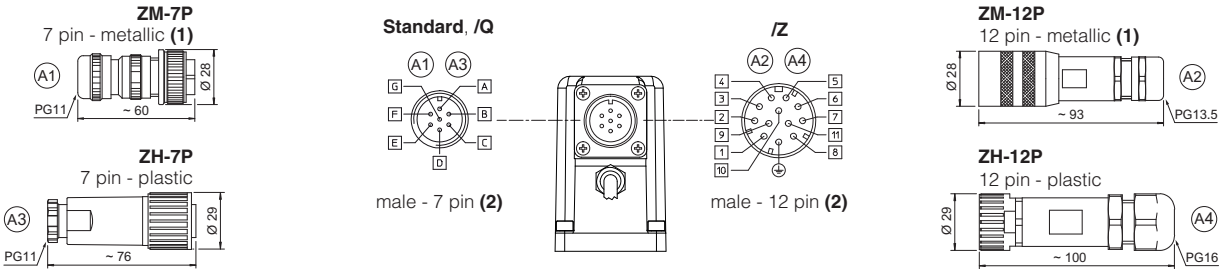

FIELDBUS CONNECTORS

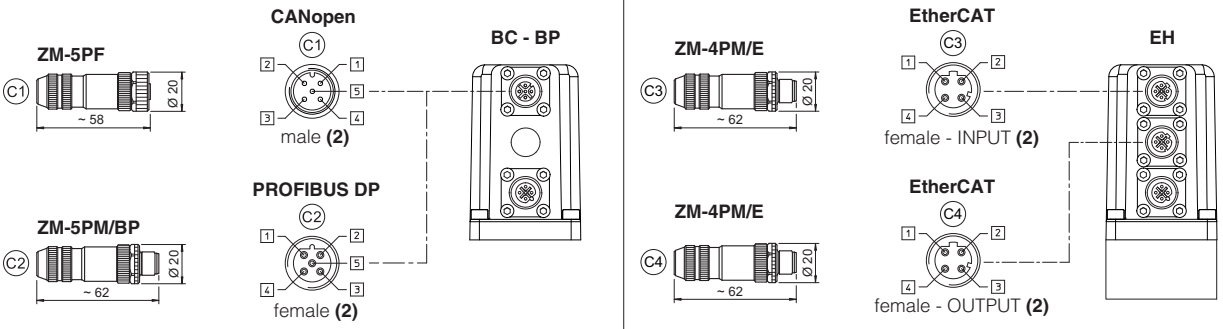

BLUETOOTH ADAPTER AND USB CONNECTOR

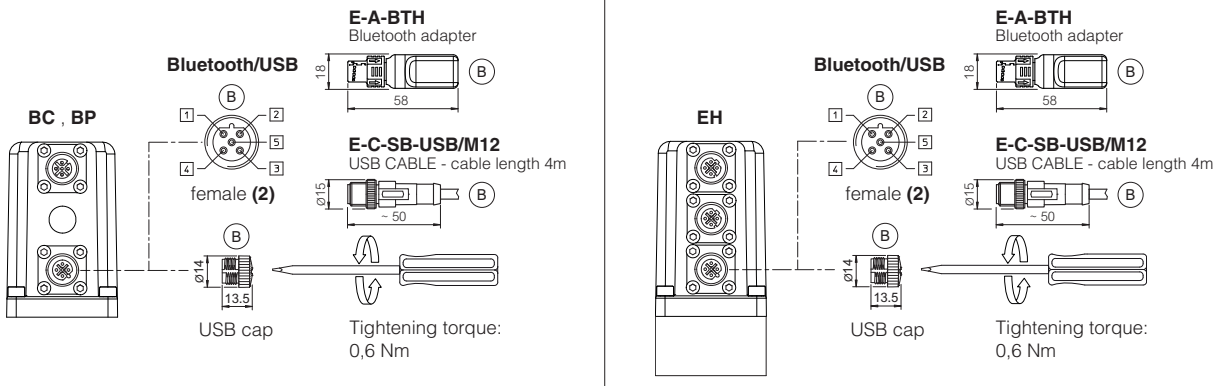

(1) Use of metallic connectors is strongly recommended in order to fulfill EMC requirements **(2)** Pin layout always referred to driver's view

22 CONNECTORS CHARACTERISTICS - to be ordered separately

22.1 Main connectors - 7 pin - for REB-NP and RES

CONNECTOR TYPE	POWER SUPPLY AND SIGNALS	POWER SUPPLY AND SIGNALS
CODE	(A1) ZM-7P	(A3) ZH-7P
Type	7pin female straight circular	7pin female straight circular
Standard	According to MIL-C-5015	According to MIL-C-5015
Material	Metallic	Plastic reinforced with fiber glass
Cable gland	PG11	PG11
Recommended cable	LiYCY 7 x 0,75 mm^2 max 20 m (logic and power supply) or LiYCY 7 x 1 mm^2 max 40 m (logic and power supply)	LiYCY 7 x 0,75 mm^2 max 20 m (logic and power supply) or LiYCY 7 x 1 mm^2 max 40 m (logic and power supply)
Conductor size	up to 1 mm^2 - available for 7 wires	up to 1 mm^2 - available for 7 wires
Connection type	to solder	to solder
Protection (EN 60529)	IP 67	IP 67

22.2 Main connectors - 12 pin - for REB-NP and RES

CONNECTOR TYPE	POWER SUPPLY AND SIGNALS	POWER SUPPLY AND SIGNALS
CODE	(A2) ZM-12P	(A4) ZH-12P
Type	12pin female straight circular	12pin female straight circular
Standard	DIN 43651	DIN 43651
Material	Metallic	Plastic reinforced with fiber glass
Cable gland	PG13,5	PG16
Recommended cable	LiYCY 12 x 0,75 mm^2 max 20 m (logic and power supply)	LiYCY 10 x 0,14mm^2 max 40 m (logic) LiYY 3 x 1mm^2 max 40 m (power supply)
Conductor size	0,5 mm^2 to 1,5 mm^2 - available for 12 wires	0,14 mm^2 to 0,5 mm^2 - available for 9 wires 0,5 mm^2 to 1,5 mm^2 - available for 3 wires
Connection type	to crimp	to crimp
Protection (EN 60529)	IP 67	IP 67

22.3 IO-Link connector - only for REB-IL

CONNECTOR TYPE	IL IO-Link
CODE	(A) ZM-5PF
Type	5pin female straight circular
Standard	M12 coding A – IEC 61076-2-101
Material	Metallic
Cable gland	Pressure nut - cable diameter 6÷8 mm
Recommended cable	5 x 0,75 mm^2 max 20 m
Connection type	screw terminal
Protection (EN 60529)	IP 67

22.4 Fieldbus communication connectors - only for RES

CONNECTOR TYPE	BC CANopen (1)		BP PROFIBUS DP (1)		EH EtherCAT (2)
CODE	(C1) ZM-5PF	(C2) ZM-5PM	(C1) ZM-5PF/BP	(C2) ZM-5PM/BP	(C1) (C2) ZM-4PM/E
Type	5 pin female straight circular	5 pin male straight circular	5 pin female straight circular	5 pin male straight circular	4 pin male straight circular
Standard	M12 coding A – IEC 61076-2-101		M12 coding B – IEC 61076-2-101		M12 coding D – IEC 61076-2-101
Material	Metallic		Metallic		Metallic
Cable gland	Pressure nut - cable diameter 6÷8 mm		Pressure nut - cable diameter 6÷8 mm		Pressure nut - cable diameter 4÷8 mm
Cable	CANbus Standard (DR 303-1)		PROFIBUS DP Standard		Ethernet standard CAT-5
Connection type	screw terminal		screw terminal		terminal block
Protection (EN 60529)	IP67		IP 67		IP 67

(1) E-TRM-** terminators can be ordered separately - see tech table **GS500**

(2) Internally terminated

23 FASTENING BOLTS AND SEALS

	AGRCZO-*-10	AGRCZO-*-20
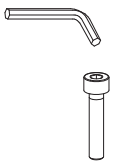	**Fastening bolts:** 4 socket head screws M10x45 class 12.9 Tightening torque = 70 Nm	**Fastening bolts:** 4 socket head screws M10x45 class 12.9 Tightening torque = 70 Nm
	Seals: 2 OR 3068 Diameter of ports A, B: Ø 14 mm 2 OR 109/70 Diameter of port X, Y: Ø 5 mm	**Seals:** 2 OR 4100 Diameter of ports A, B: Ø 22 mm 2 OR 109/70 Diameter of port X, Y: Ø 5 mm

SIZE 10

ISO 5781: 2000
Mounting surface: 5781-06-07-0-00
(see table P005)

	Mass [kg]		
	R	REB, RES	RES-EH
AGRCZO-*-10	5,8	6,3	6,4
Option /P	+0,5		

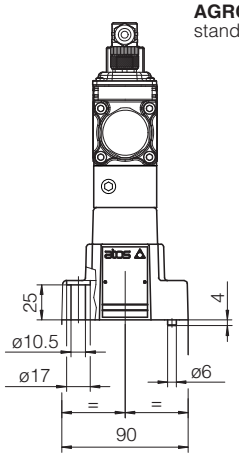

AGRCZO-R-P-10
standard and **/R**

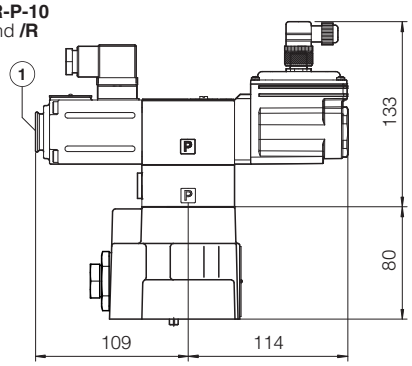

AGRCZO-REB-P-NP-10
AGRCZO-REB-P-IL-10
AGRCZO-RES-P-BC-10
AGRCZO-RES-P-BP-10
standard and **/R**

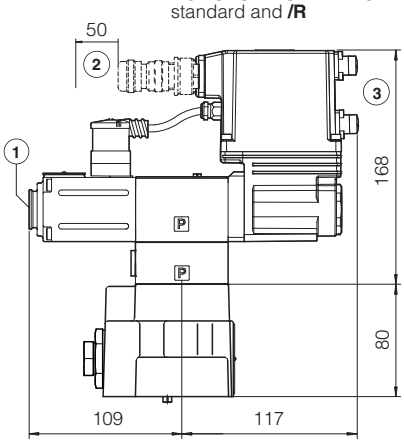

AGRCZO-RES-P-EH-10
standard and **/R**

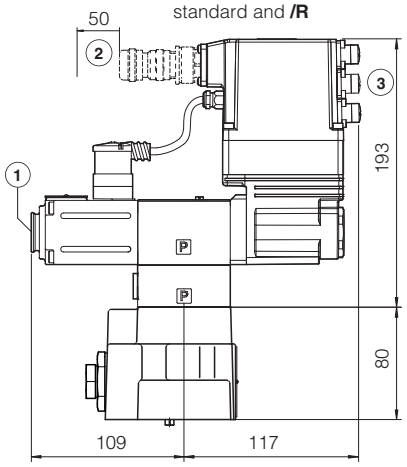

(1) = Air bleeding, see section 18

(2) = Space required for connection cable and for connector removal

(3) = The dimensions of connectors and Bluetooth adapter must be considered, see section 21.7, 21.8 and 21.9

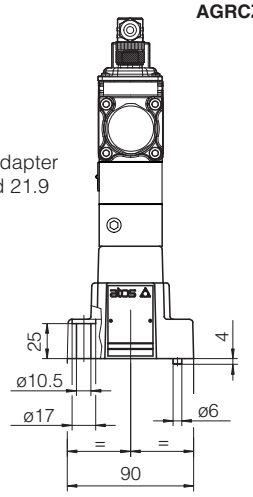

AGRCZO-R-P-10 /P

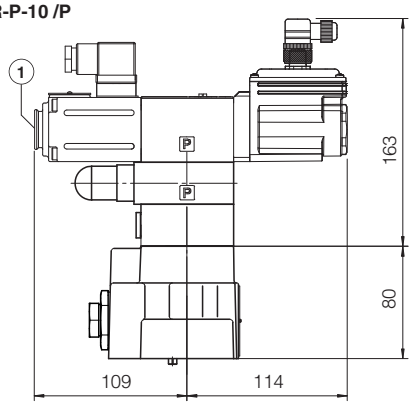

AGRCZO-REB-P-NP-10 /P
AGRCZO-REB-P-IL-10 /P
AGRCZO-RES-P-BC-10 /P
AGRCZO-RES-P-BP-10 /P

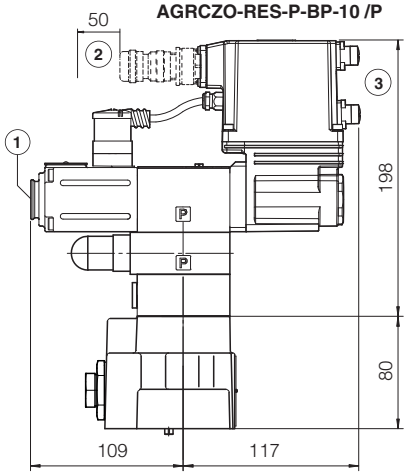

AGRCZO-RES-P-EH-10 /P

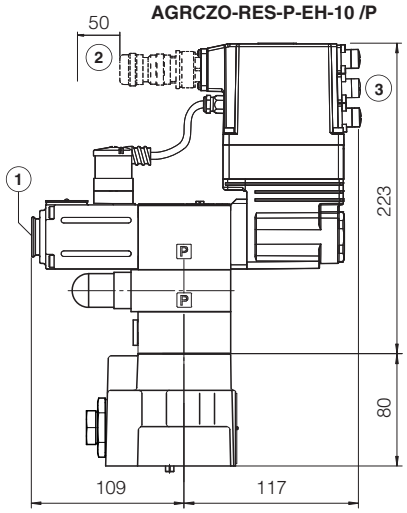

SIZE 20

ISO 5781: 2000
Mounting surface: 5781-08-10-0-00
(see table P005)

	Mass [kg]		
	R	**REB, RES**	**RES-EH**
AGRCZO-*-20	8,3	8,8	8,9
Option /P	+0,5		

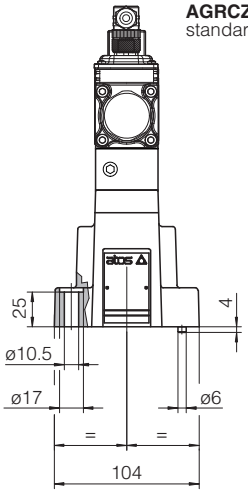

AGRCZO-R-P-20
standard and **/R**

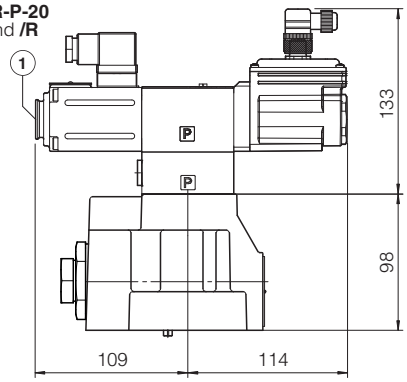

AGRCZO-REB-P-NP-20
AGRCZO-REB-P-IL-20
AGRCZO-RES-P-BC-20
AGRCZO-RES-P-BP-20
standard and **/R**

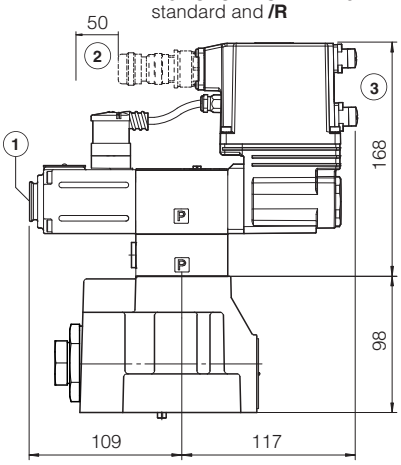

AGRCZO-RES-P-EH-20
standard and **/R**

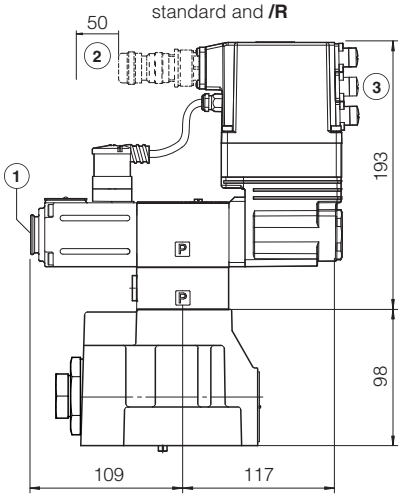

1 = Air bleeding, see section 18

2 = Space required for connection cable and for connector removal

3 = The dimensions of connectors and Bluetooth adapter must be considered, see section 21.7, 21.8 and 21.9

AGRCZO-R-P-20 /P

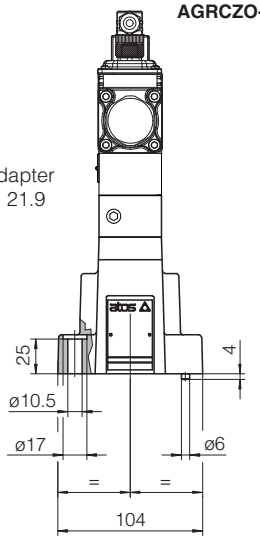

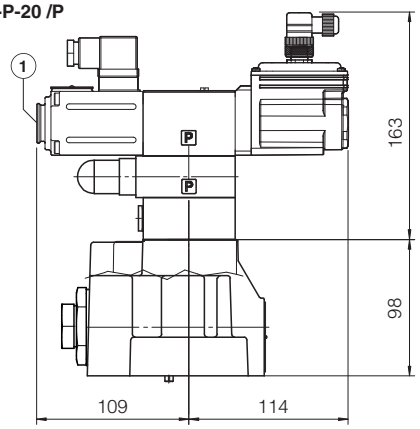

AGRCZO-REB-P-NP-20 /P
AGRCZO-REB-P-IL-20 /P
AGRCZO-RES-P-BC-20 /P
AGRCZO-RES-P-BP-20 /P

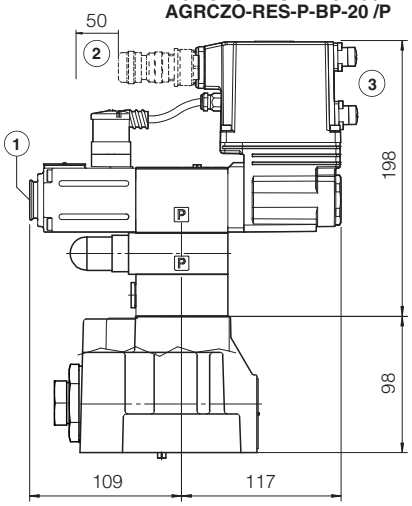

AGRCZO-RES-P-EH-20 /P

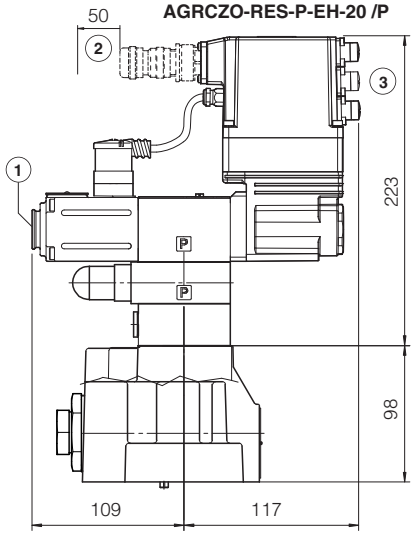

25 RELATED DOCUMENTATION

FS001	Basics for digital electrohydraulics	**P005**	Mounting surfaces for electrohydraulic valves
FS900	Operating and maintenance information for proportional valves	**QB400**	Quickstart for REB valves commissioning
GS203	E-BM-RES digital driver	**QF400**	Quickstart for RES valves commissioning
GS500	Programming tools	**E-MAN-BM-RES**	E-BM-RES user manual (off-board)
GS510	Fieldbus	**E-MAN-RI-REB**	REB user manual
GS520	IO-Link interface	**E-MAN-RI-RES**	RES user manual
K800	Electric and electronic connectors		

Digital proportional pressure cartridges high performance

piloted, with on-board pressure transducer - compensator, relief, reducing functions

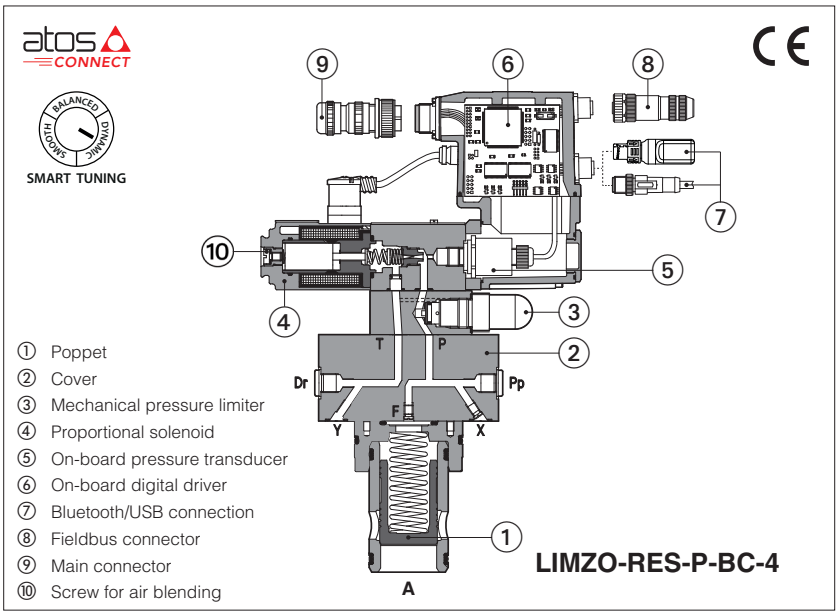

LICZO, LIMZO, LIRZO

2-way digital proportional cartridges with on-board pressure transducer, respectively performing: pressure compensator, relief and reducing closed loop functions.

R to be coupled with off-board drivers.

REB basic execution, with on-board digital driver, with analog reference signal or IO-Link interface for digital reference signals, valve settings, and real-time diagnostics.

RES full execution, with on-board digital driver which includes also fieldbus interfaces for digital reference signals, valve settings, and real-time diagnostics.

For **REB** and **RES**, Bluetooth/USB connection is always present for valve settings via mobile App and Atos PC software.

Size: **16** ÷ **80** - ISO 7368
Max flow: up to **4500 l/min**
Max pressure: **350 bar**

1 MODEL CODE OF COVERS

LIMZO - **RES** - **P** - **BC** - **4** / **315** / * / * * / *

LIMZO

Proportional
pressure cartridges, piloted
LICZO = pressure compensator
LIMZO = pressure relief
LIRZO = pressure reducing

RES

R = off-board driver, see section 5
REB = basic on-board digital driver
RES = full on-board digital driver

P

P = with on-board pressure transducer

BC

IO-Link interface, only for REB, see section 10 :
NP = Not present **IL** = IO-Link

Fieldbus interfaces, only for RES, see section 11 :
BC = CANopen **EH** = EtherCAT
BP = PROFIBUS DP

4

Valve size ISO 7368:
1 = 16
2 = 25
3 = 32
4 = 40
5 = 50 (not for LIRZO)
6 = 63 (only for LIMZO)
8 = 80 (only for LIMZO)

315

Max regulated pressure:
100 = 100 bar
210 = 210 bar
315 = 315 bar
350 = 350 bar

*****

Hydraulic options (1):
P =with on-board mechanical pressure limiter (standard for size 1, 2 and 3)

Electronic options, only for **REB** and **RES (1)**:
I = current reference input and monitor 4 ÷ 20 mA
Q = enable signal
Z = double power supply, enable, fault and monitor signals - 12 pin connector

*****

Bluetooth option, only for **REB** and **RES (1)**, see section 8 :
T = Bluetooth adapter supplied with the valve

*****

Series number

*****

Seals material,
see section 15 :
- = NBR
PE = FKM
BT = NBR low temperature

(1) For possible combined options, see section 19

2 HYDRAULIC SYMBOLS

LICZO

LICZO-R-1÷3
LICZO-R-4÷5 /P

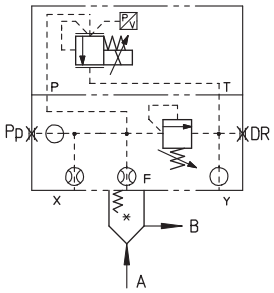

LICZO-R-4
LICZO-R-5

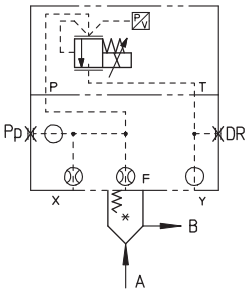

LICZO-REB(RES)-1÷3
LICZO-REB(RES)-4÷5 /P

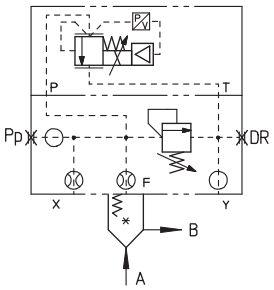

LICZO-REB(RES)-4÷5

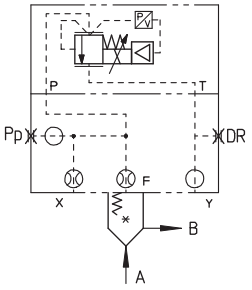

LIMZO

LIMZO-R-1÷3
LIMZO-R-4÷8 /P

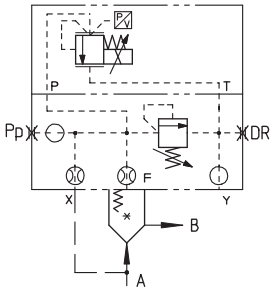

LIMZO-R-4÷8

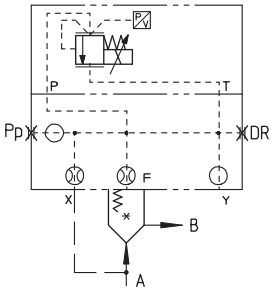

LIMZO-REB(RES)-1÷3
LIMZO-REB(RES)-4÷8 /P

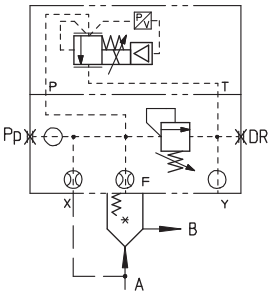

LIMZO-REB(RES)-4÷8

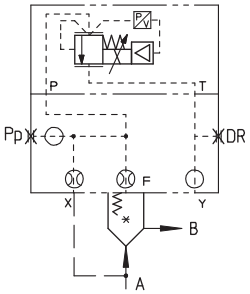

LIRZO

LIRZO-R-1÷3
LIRZO-R-4 /P

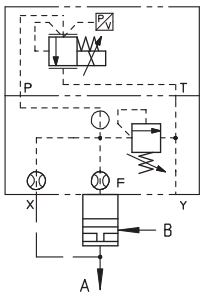

LIRZO-R-4

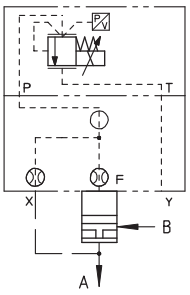

LIRZO-REB(RES)-1÷3
LIRZO-REB(RES)-4 /P

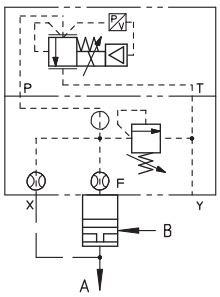

LIRZO-REB(RES)-4

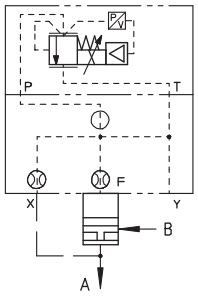

3 MODEL CODE OF CARTRIDGES

SC LI	-	32	31	2	*	/	*

Cartridge according to ISO 7368

Cartridge size ISO 7368:
16; **25**; **32**; **40**; **50**; **63**; **80**

Type of poppet:
31 = for LIMZO and LICZO
36 = for LICZO
37 = for LIRZO

Spring cracking pressure:
2 = 1,5 bar for poppet 31
3 = 3 bar for poppet 31 and 36
4 = 4 bar only for poppet 37
6 = 6 bar for poppet 31 and 36
7 = 7 bar for poppet 37 (only for size 16, 25, 32, 40)

Series number

Seals material, see section 15 :
- = NBR
PE = FKM
BT = NBR low temperature

4 TYPE OF POPPET

Type of poppet	31	36	37
Functional sketch (Hydraulic symbol)	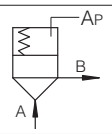	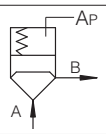	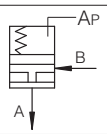
Typical section	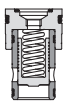	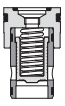	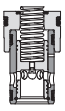
Area ratio A: A_P	1:1	1:1	1:1

5 OFF-BOARD ELECTRONIC DRIVER - only for **R**

Drivers model	E-BM-RES
Type	Digital
Format	DIN rail panel format
Tech table	GS203

6 GENERAL NOTES

Atos digital proportionals valves are CE marked according to the applicable directives (e.g. Immunity and Emission EMC Directive).
Installation, wirings and start-up procedures must be performed according to the general prescriptions shown in tech table **FS900** and in the user manuals included in the E-SW-SETUP programming software.

7 VALVE SETTINGS AND PROGRAMMING TOOLS - see tech. table **GS500**

7.1 Atos CONNECT mobile App

Free downloadable App for smartphones and tablets which allows quick access to valve main functional parameters and basic diagnostic information via Bluetooth, thus avoiding physical cable connection and significantly reducing commissioning time.
Atos CONNECT supports Atos digital valve drivers equipped with E-A-BTH adapter or with built-in Bluetooth. It does not support valves with p/Q control or axis controls.

Download on the App Store

GET IT ON Google Play

7.2 E-SW-SETUP PC software

Free downloadable software for PC allows to set all valve functional parameters and to access complete diagnostic information of digital valve drivers via Bluetooth/USB service port.
Atos E-SW-SETUP PC software supports all Atos digital valve drivers and it is available at www.atos.com in MyAtos area.

WARNING: drivers USB port is not isolated! For E-C-SB-USB/M12 cable, the use of E-A-SB-USB/OPT isolator adapter is highly recommended for PC protection

Bluetooth or USB connection

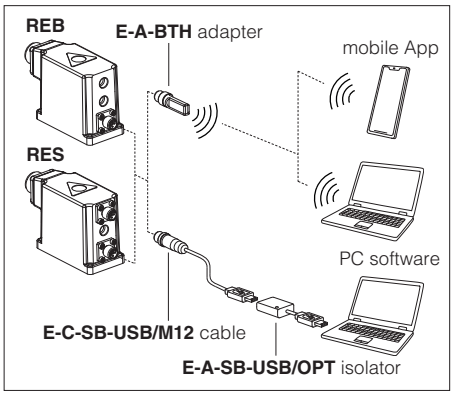

8 BLUETOOTH OPTION - see tech. table **GS500**

T option adds Bluetooth® connectivity to Atos valve drivers thanks to E-A-BTH adapter, which can be left permanently installed on-board, to allow the Bluetooth connection with the valve drivers at any time. E-A-BTH adapter can also be purchased separately and used to connect with any supported Atos digital product.
Bluetooth connection to the valve can be protected against unauthorised access by setting a personal password. The adapter leds visually indicates the status of valve driver and Bluetooth connection.

WARNING: for the list of countries where the Bluetooth adapter has been approved, see tech. table **GS500**
T option is not available for the Indian market, so the Bluetooth adapter must be ordered separately.

9 SMART TUNING

Smart tuning allows to adjust the valve dynamic response in order to match different hydraulic conditions and performance requirements.

The valve is provided with 3 factory settings for the pressure control:

- **dynamic** fast response time for best dynamic performances. Default factory setting for pressure valves
- **balanced** average response time suitable for major applications
- **smooth** attenuated response time for slow regulation without overshoots

Smart tuning setting can be switched from Dynamic (default) to Balanced or Smooth via software or fieldbus; if requested, performances can be further customized directly tuning each single control parameter. For details consult related manuals E-MAN-* and Quickstart, see section 28.

Below indications have to be considered as a general guideline, being affected by hydraulic circuit stiffness, working flow and dead volume.

High stiffness - Low flow - Small volume

1 = dynamic
2 = balanced
3 = smooth

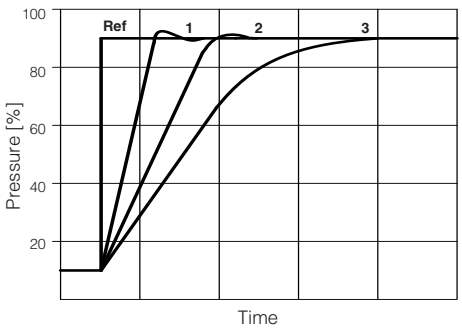

Low stiffness - High flow - Large volume

1 = dynamic
2 = balanced
3 = smooth

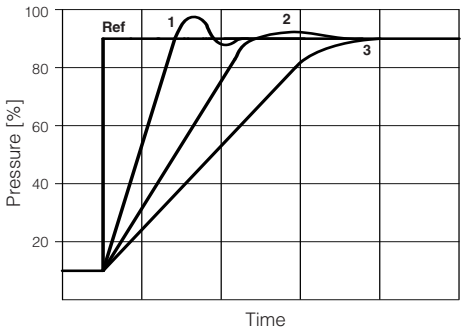

10 IO-LINK - only for **REB**, see tech. table **GS520**

IO-Link allows low cost digital communication between the valve and machine central unit. The valve is directly connected to a port of an IO-Link master (point-to-point connection) via low-cost unshielded cables for digital reference, diagnostic and settings. The IO-Link master works as a hub exchanging this information with the machine central unit via fieldbus.

11 FIELDBUS - only for **RES**, see tech. table **GS510**

Fieldbus allows valve direct communication with machine control unit for digital reference, valve diagnostics and settings. These execution allow to operate the valves through fieldbus or analog signals available on the main connector.

12 GENERAL CHARACTERISTICS

Assembly position	Any position
Subplate surface finishing to ISO 4401	Acceptable roughness index: Ra ≤ 0,8, recommended Ra 0,4 – Flatness ratio 0,01/100
MTTFd valves according to EN ISO 13849	75 years, for further details see technical table P007
Ambient temperature range	**R:** **Standard** = -20°C ÷ +70°C **/PE** option = -20°C ÷ +70°C **/BT** option = -40°C ÷ +60°C **REB, RES:** **Standard** = -20°C ÷ +60°C **/PE** option = -20°C ÷ +60°C **/BT** option = -40°C ÷ +60°C
Storage temperature range	**R:** **Standard** = -20°C ÷ +80°C **/PE** option = -20°C ÷ +80°C **/BT** option = -40°C ÷ +70°C **REB, RES:** **Standard** = -20°C ÷ +70°C **/PE** option = -20°C ÷ +70°C **/BT** option = -40°C ÷ +70°C
Surface protection	Zinc coating with black passivation, galvanic treatment (driver housing for REB and RES)
Corrosion resistance	Salt spray test (EN ISO 9227) > 200 h
Vibration resistance	See technical table G004 (for REB and RES)
Compliance	CE according to EMC directive 2014/30/EU (Immunity: EN 61000-6-2; Emission: EN 61000-6-3) RoHS Directive 2011/65/EU as last update by 2015/863/EU REACH Regulation (EC) n°1907/2006

13 HYDRAULIC CHARACTERISTICS - based on mineral oil ISO VG 46 at 50 °C

Valve model		LICZO					LIMZO							LIRZO			
valve size		**1**	**2**	**3**	**4**	**5**	**1**	**2**	**3**	**4**	**5**	**6**	**8**	**1**	**2**	**3**	**4**
Max flow	[l/min]	200	400	750	1000	2000	200	400	750	1000	2000	3000	4500	160	300	550	800
Min regulated pres. at port A	[bar]	9	8,5	8	13	15	7	7	7	10,5	12	12	12	7			
Min regulated pres. at port A for /350	[bar]	11	10	10	13	16	10	10	9	12	13	13	16	12			
Max regulated pres. at port A	[bar]	100; 210; 315; 350					100; 210; 315; 350							100; 210; 315; 350			
Response time 0-100% step signal (depending on installation) **(1)**	[ms]	80 ÷ 300					80 ÷ 350							80 ÷ 200			
Hysteresis	[% of the regulated max flow]	≤ 0,5															
Linearity	[% of the regulated max flow]	≤ 1,0															
Repeatability	[% of the regulated max flow]	≤ 0,2															
Thermal drift		zero point displacement < 1% at ΔT = 40°C															

Note: above performance data refer to valves coupled with Atos electronic drivers, see section 5

(1) Average response time value; the pressure variation in consequence of a modification of the reference input signal to the valve is affected by the stiffness of the hydraulic circuit: greater is the stiffness of the circuit, faster is the dynamic response, see section 9 .

14 ELECTRICAL CHARACTERISTICS

Power supplies	Nominal : +24 VDC Rectified and filtered : VRMS = 20 ÷ 32 VMAX (ripple max 10 % VPP)				
Max power consumption	**R** = 30 W **REB**, **RES** = 50 W				
Max. solenoid current	3 A				
Coil resistance R at 20°C	3 ÷ 3,3 Ω				
Analog input signals	Voltage: range ±10 VDC (24 VMAX tolerant) Input impedance: Ri > 50 kΩ Current: range ±20 mA Input impedance: Ri = 500 Ω				
Monitor output	Voltage: maximum range 0 ÷ 10 VDC @ max 5 mA Current: maximum range 0 ÷ 20 mA @ max 500 Ω load resistance				
Enable input	Range: 0 ÷ 9 VDC (OFF state), 15 ÷ 24 VDC (ON state), 9 ÷ 15 VDC (not accepted); Input impedance: Ri > 87 kΩ				
Fault output	Output range : 0 ÷ 24 VDC (ON state ≅ VL+ [logic power supply] ; OFF state ≅ 0 V) @ max 50 mA; external negative voltage not allowed (e.g. due to inductive loads)				
Pressure transducer **(1)**	E-ATR-8/*/I Output signal: 4 ÷ 20 mA (see tech table **GS465**)				
Alarms	Solenoid not connected/short circuit, cable break with current reference signal, over/under temperature, current control monitoring, power supplies level, pressure transducer failure				
Insulation class	H (180°) Due to the occurring surface temperatures of the solenoid coils, the European standards ISO 13732-1 and EN982 must be taken into account				
Protection degree to DIN EN60529	**R** = IP65; **REB**, **RES** = IP66 / IP67 with mating connectors				
Duty factor	Continuous rating (ED=100%)				
Tropicalization	Tropical coating on electronics PCB				
Additional characteristics	Short circuit protection of solenoid's current supply; current control by P.I.D. with rapid solenoid switching; protection against reverse polarity of power supply				
Communication interface	USB Atos ASCII coding	IO-Link Interface and System Specification 1.1.3	CANopen EN50325-4 + DS408	PROFIBUS DP EN50170-2/IEC61158	EtherCAT IEC 61158
Communication physical layer	not insulated USB 2.0+USB OTG	SDCI class port B	optical insulated CAN ISO11898	optical insulated RS485	Fast Ethernet, insulated 100 Base TX
Recommended wiring cable	LiYCY shielded cables, see section 24				

(1) In case of pressure transducer failure, the valve's reaction can be configured through Atos E-SW-SETUP software to:
- cut off the current to solenoid, therefore the regulated pressure will be reduced to minimum value (default setting)
- automatically switch the pressure control from closed loop (dynamic, balanced, smooth) to open loop, to let the valve to temporarily operate with reduced regulation accuracy

Note: a maximum time of 500 ms (depending on communication type) has to be considered between the driver energizing with the 24 VDC power supply and when the valve is ready to operate. During this time the current to the valve coils is switched to zero.

15 SEALS AND HYDRAULIC FLUIDS - for other fluids not included in below table, consult our technical office

Seals, recommended fluid temperature	NBR seals (standard) = -20°C ÷ +60°C (+80°C for **R**), with HFC hydraulic fluids = -20°C ÷ +50°C FKM seals (/PE option) = -20°C ÷ +80°C NBR low temp. seals (/BT option) = -40°C ÷ +60°C, with HFC hydraulic fluids = -20°C ÷ +50°C		
Recommended viscosity	20 ÷ 100 mm²/s - max allowed range 15 ÷ 380 mm²/s		
Max fluid contamination level — normal operation	ISO4406 class 18/16/13 NAS1638 class 7		see also filter section at www.atos.com or KTF catalog
Max fluid contamination level — longer life	ISO4406 class 16/14/11 NAS1638 class 5		
Hydraulic fluid	**Suitable seals type**	**Classification**	**Ref. Standard**
Mineral oils	NBR, FKM, NBR low temp.	HL, HLP, HLPD, HVLP, HVLPD	DIN 51524
Flame resistant without water	FKM	HFDU, HFDR	ISO 12922
Flame resistant with water	NBR, NBR low temp.	HFC	

16 DIAGRAMS (based on mineral oil ISO VG 46 at 50 °C)

1 Regulation diagrams LIMZO
2 Regulation diagrams LICZO

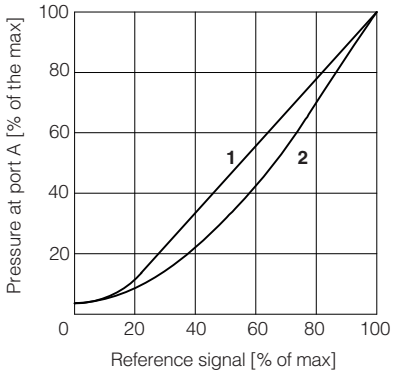

3 Pressure/flow diagrams LICZO, LIMZO

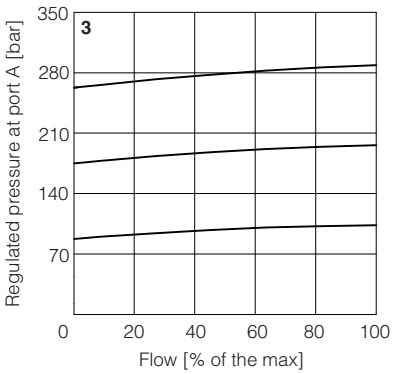

4-14 Min. pressure/flow diagrams
with zero reference signal

4 = LIMZO-*-1
5 = LIMZO-*-2
6 = LIMZO-*-3
7 = LIMZO-*-4
8 = LIMZO-*-5
9 = LIMZO-*-6
10 = LIMZO-*-8
11 = LICZO-*-1
12 = LICZO-*-2
13 = LICZO-*-3
14 = LICZO-*-4
15 = LICZO-*-5

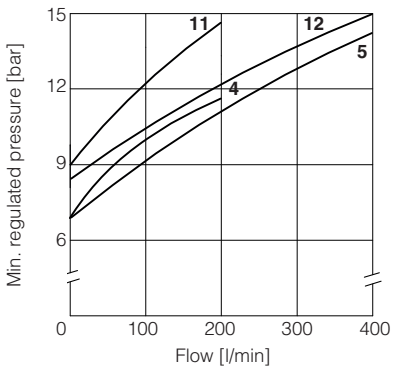

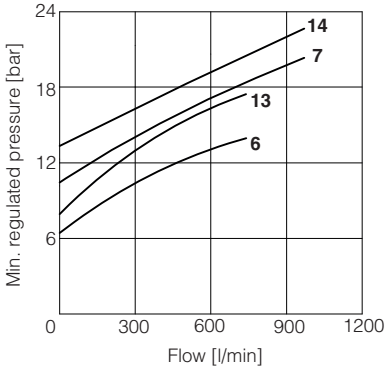

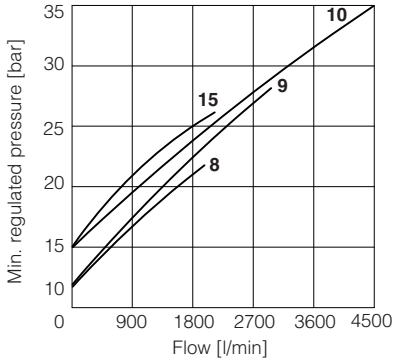

Regulation diagrams LIRZO

15= LIRZO-A

16-19 Min. pressure/flow diagrams
with reference signal "null"

16= LIRZO-*-1
17= LIRZO-*-2
18= LIRZO-*-3
19= LIRZO-*-4

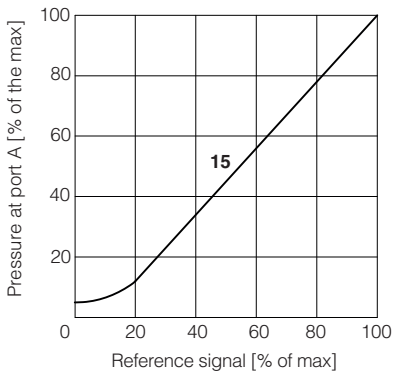

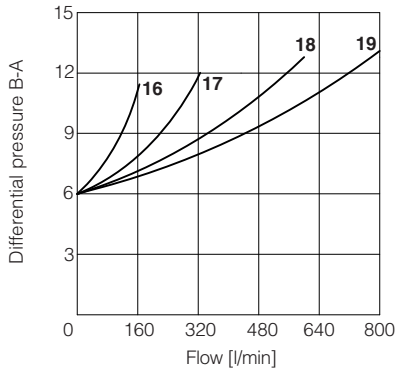

Pressure/flow diagrams

20= LIRZO-A

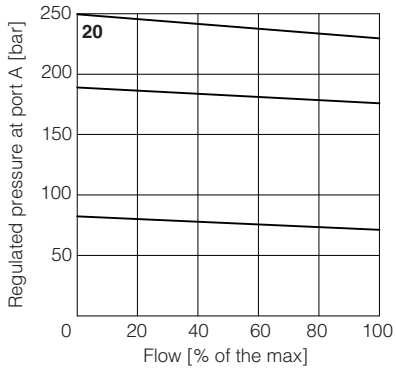

17 HYDRAULIC OPTIONS

P = This option (standard for size 1, 2 and 3) provides a mechanical pressure limiter acting as protection against overpressure. For safety reasons the factory setting of the mechanical pressure limiter is fully unloaded (min pressure).
At the first commissioning it must be set at a value lightly higher than the max pressure regulated with the proportional control.
For the pressure setting of the mechanical pressure limiter, proceed according to following steps:

- apply the max reference input signal to the valve's driver. The system pressure will not increase until the mechanical pressure limiter remains unloaded
- turn clockwise the adjustment screw ① until the system pressure will increase up to a stable value corresponding to the pressure setpoint at max reference input signal
- turn clockwise the adjustment screw ① of additional 1 or 2 turns to ensure that the mechanical pressure limiter remains closed during the proportional valve working

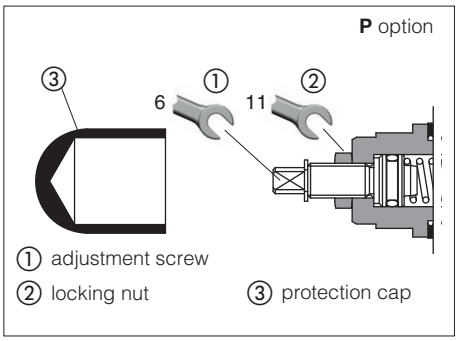

18 ELECTRONIC OPTIONS - only for **REB-NP** and **RES**

I = This option provides 4 ÷ 20 mA current reference and monitor signals, instead of the standard 0 ÷ 10 VDC.
Input signal can be reconfigured via software selecting between voltage and current, within a maximum range of ±10 VDC or ±20 mA.
It is normally used in case of long distance between the machine control unit and the valve or where the reference signal can be affected by electrical noise; the valve functioning is disabled in case of reference signal cable breakage.

Q = This option permits to inhibit the valve function without removing the power supply to the driver. Upon disable command the current to the solenoid is zeroed and the valve's spool moves to rest position.
The option /Q is suggested for all cases where the valve has to be frequently inhibited during the machine cycle – see 21.5 for signal specifications.

Z = This option provides, on the 12 pin main connector, the following additional features:
Fault output signal - see 21.6
Enable input signal - see above option /Q
Power supply for driver's logics and communication - see 21.2

19 POSSIBLE COMBINED OPTIONS

Hydraulic options: all combination possible
Electronic options: /IQ, /IZ

Note: **/T** Bluetooth adapter option can be combined with all other options

20 AIR BLEEDING

At the first valve commissioning the air eventually trapped inside the solenoid must be bled-off through the screw ① located at the rear side of the solenoid housing.
The presence of air may cause pressure instability and vibrations.

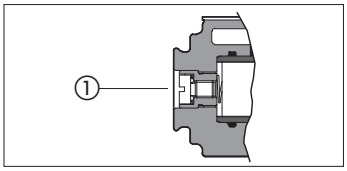

21 POWER SUPPLY AND SIGNALS SPECIFICATIONS - only for **REB-NP** and **RES**

Generic electrical output signals of the valve (e.g. fault or monitor signals) must not be directly used to activate safety functions, like to switch-ON/OFF the machine's safety components, as prescribed by the European standards (Safety requirements of fluid technology systems and components-hydraulics, ISO 4413).

For **REB-IL** signals see section 22

21.1 Power supply (V+ and V0)

The power supply must be appropriately stabilized or rectified and filtered: apply at least a 10000 μF/40 V capacitance to single phase rectifiers or a 4700 μF/40 V capacitance to three phase rectifiers. In case of separate power supply see 21.2.

⚠ A safety fuse is required in series to each power supply: 2,5 A time lag fuse.

21.2 Power supply for driver's logic and communication (VL+ and VL0) - only for **/Z** option

The power supply for driver's logic and communication must be appropriately stabilized or rectified and filtered: apply at least a 10000 μF/40 V capacitance to single phase rectifiers or a 4700 μF/40 V capacitance to three phase rectifiers.
The separate power supply for driver's logic on pin 9 and 10, allow to remove solenoid power supply from pin 1 and 2 maintaining active the diagnostics, USB and fieldbus communications.

⚠ A safety fuse is required in series to each driver's logic and communication power supply: 500 mA fast fuse.

21.3 Pressure reference input signal (P_INPUT+)

The driver controls in closed loop the current to the valve pressure proportionally to the external reference input signal.
Reference input signal is factory preset according to selected valve code, defaults are 0 ÷ 10 VDC for standard and 4 ÷ 20 mA for /I option.
Input signal can be reconfigured via software selecting between voltage and current, within a maximum range of ±10 VDC or ± 20 mA.
Drivers with fieldbus interface (BC, BP, EH) can be software set to receive reference signal directly by the machine control unit (fieldbus reference).
Analog reference input signal can be used as on-off commands with input range 0 ÷ 24 VDC.

21.4 Pressure monitor output signal (P_MONITOR)

The driver generates an analog output signal proportional to the actual pressure of the valve; the monitor output signal can be software set to show other signals available in the driver (e.g. analog reference, fieldbus reference).
Monitor output signal is factory preset according to selected valve code, defaults settings are 0 ÷10 VDC for standard and 4 ÷ 20 mA for /I option.
Output signal can be reconfigured via software selecting between voltage and current, within a maximum range of 0 ÷10 VDC or 0 ÷ 20 mA.

21.5 Enable input signal (ENABLE) - not for standard

To enable the driver, supply a 24 VDC on pin 3 (pin C): Enable input signal allows to enable/disable the current supply to the solenoid, without removing the electrical power supply to the driver; it is used to active the communication and the other driver functions when the valve must be disabled for safety reasons. This condition **does not comply** with norms IEC 61508 and ISO 13849.
Enable input signal can be used as generic digital input by software selection.

21.6 Fault output signal (FAULT) - only for **/Z** option

Fault output signal indicates fault conditions of the driver (solenoid short circuits/not connected, reference signal broken for 4 ÷ 20 mA input, etc.).
Fault presence corresponds to 0 VDC, normal working corresponds to 24 VDC. Fault status is not affected by the Enable input signal.

22 IO-LINK SIGNALS SPECIFICATIONS - only for **REB-IL**

22.1 Power supply for IO-Link communication (L+ and L-)

The IO-Link master provides dedicated 24 VDC power supply for IO-Link communication.
Maximum power consumption: 2 W
Internal electrical isolation of power L+, L- from P24, N24

22.2 Power supply for driver's logic and valve regulation (P24 and N24)

The IO-Link master provides dedicated 24 VDC power supply for valve regulation, logics and diagnostics.
Maximum power consumption: 50 W
Internal electrical isolation of power P24, N24 from L+, L-

22.3 IO-Link data line (C/Q)

C/Q signal is used to establish communication between IO-Link master and valve.

23 ELECTRONIC CONNECTIONS

23.1 Main connector signals - 7 pin (A1) Standard and /Q option - for REB-NP and RES

PIN	Standard	/Q	TECHNICAL SPECIFICATIONS	NOTES
A	**V+**		Power supply 24 VDC	Input - power supply
B	**V0**		Power supply 0 VDC	Gnd - power supply
C	**AGND**		Analog ground	Gnd - analog signal
		ENABLE	Enable (24 VDC) or disable (0 VDC) the driver, referred to V0	Input - on/off signal
D	**P_INPUT+**		Pressure reference input signal: ±10 VDC / ±20 mA maximum range Defaults are 0 ÷ 10 VDC for standard and 4 ÷ 20 mA for /I option	Input - analog signal **Software selectable**
E	**INPUT-**		Negative reference input signal for P_INPUT+	Input - analog signal
F	**P_MONITOR** referred to: AGND | V0		Pressure monitor output signal: 0 ÷ 10 VDC / 0 ÷ 20 mA maximum range Defaults are 0 ÷ 10 VDC for standard and 4 ÷ 20 mA for /I option	Output - analog signal **Software selectable**
G	**EARTH**		Internally connected to driver housing	

23.2 Main connector signals - 12 pin (A2) /Z option - for REB-NP and RES

PIN	/Z	TECHNICAL SPECIFICATIONS	NOTES
1	**V+**	Power supply 24 VDC	Input - power supply
2	**V0**	Power supply 0 VDC	Gnd - power supply
3	**ENABLE**	Enable (24 VDC) or disable (0 VDC) the driver, referred to VL0	Input - on/off signal
4	**P_INPUT+**	Pressure reference input signal: ±10 VDC / ±20 mA maximum range Defaults are 0 ÷ 10 VDC for standard and 4 ÷ 20 mA for /I option	Input - analog signal **Software selectable**
5	**INPUT-**	Negative reference input signal for INPUT+	Input - analog signal
6	**P_MONITOR**	Pressure monitor output signal: 0 ÷ 10 VDC / 0 ÷ 20 mA maximum range, referred to VL0 Defaults are 0 ÷ 10 VDC for standard and 4 ÷ 20 mA for /I option	Output - analog signal **Software selectable**
7	**NC**	Do not connect	
8	**NC**	Do not connect	
9	**VL+**	Power supply 24 VDC for driver's logic and communication	Input - power supply
10	**VL0**	Power supply 0 VDC for driver's logic and communication	Gnd - power supply
11	**FAULT**	Fault (0 VDC) or normal working (24 VDC), referred to VL0	Output - on/off signal
PE	**EARTH**	Internally connected to driver housing	

Note: do not disconnect VL0 before VL+ when the driver is connected to PC USB port

23.3 IO-Link connector signals - M12 - 5 pin - Coding A, port class B (A) only for REB-IL

PIN	SIGNAL	TECHNICAL SPECIFICATIONS	NOTES
1	**L+**	Power supply 24 VDC for IO-Link communication	Input - power supply
2	**P24**	Power supply 24 VDC for valve regulation, logics and diagnostics	Input - power supply
3	**L-**	Power supply 0 VDC for IO-Link communication	Gnd - power supply
4	**C/Q**	IO-Link data line	Input / Output - signal
5	**N24**	Power supply 0 VDC for valve regulation, logics and diagnostics	Gnd - power supply

Note: L+, L- and P24, N24 are electrically isolated

23.4 Communication connectors - for REB (B) and RES (B) - (C)

(B) **USB connector - M12 - 5 pin** always present

PIN	SIGNAL	TECHNICAL SPECIFICATION (1)
1	**+5V_USB**	Power supply
2	**ID**	Identification
3	**GND_USB**	Signal zero data line
4	**D-**	Data line -
5	**D+**	Data line +

(C1) **BC fieldbus execution, connector - M12 - 5 pin (2)**

PIN	SIGNAL	TECHNICAL SPECIFICATION (1)
1	**CAN_SHLD**	Shield
2	**NC**	do not connect
3	**CAN_GND**	Signal zero data line
4	**CAN_H**	Bus line (high)
5	**CAN_L**	Bus line (low)

(C2) **BP fieldbus execution, connector - M12 - 5 pin (2)**

PIN	SIGNAL	TECHNICAL SPECIFICATION (1)
1	**+5V**	Termination supply signal
2	**LINE-A**	Bus line (high)
3	**DGND**	Data line and termination signal zero
4	**LINE-B**	Bus line (low)
5	**SHIELD**	

(C3) (C4) **EH fieldbus execution, connector - M12 - 4 pin (2)**

PIN	SIGNAL	TECHNICAL SPECIFICATION (1)
1	**TX+**	Transmitter
2	**RX+**	Receiver
3	**TX-**	Transmitter
4	**RX-**	Receiver
Housing	**SHIELD**	

(1) Shield connection on connector's housing is recommended

(2) Only for **RES** execution

23.5 Solenoid connection - only for R

PIN	SIGNAL	TECHNICAL SPECIFICATION	Connector code 666
1	**COIL**	Power supply	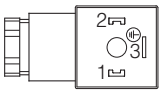
2	**COIL**	Power supply	
3	**GND**	Ground	

23.6 Pressure transducer connection - only for R

PIN	SIGNAL	TECHNICAL SPECIFICATION	Connector code ZBE-08
1	**V+**	Power supply	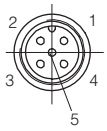
2	**NC**	Not connected	
3	**TR**	Output signal 4 ÷ 20 mA	
4	**NC**	Not connected	
5	**NC**	Not connected	

23.7 REB-NP connections layout

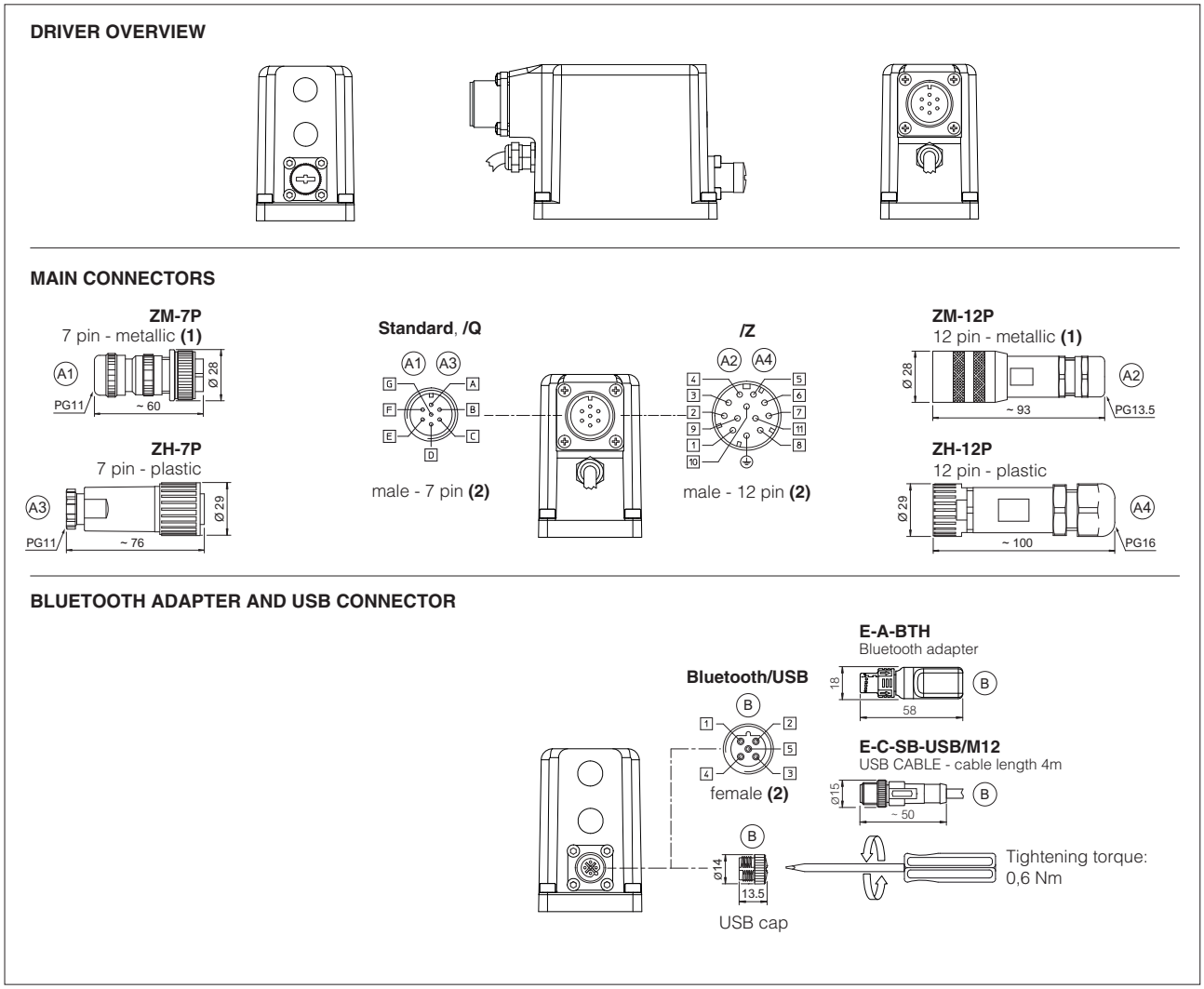

(1) Use of metallic connectors is strongly recommended in order to fulfill EMC requirements **(2)** Pin layout always referred to driver's view

23.8 REB-IL connections layout

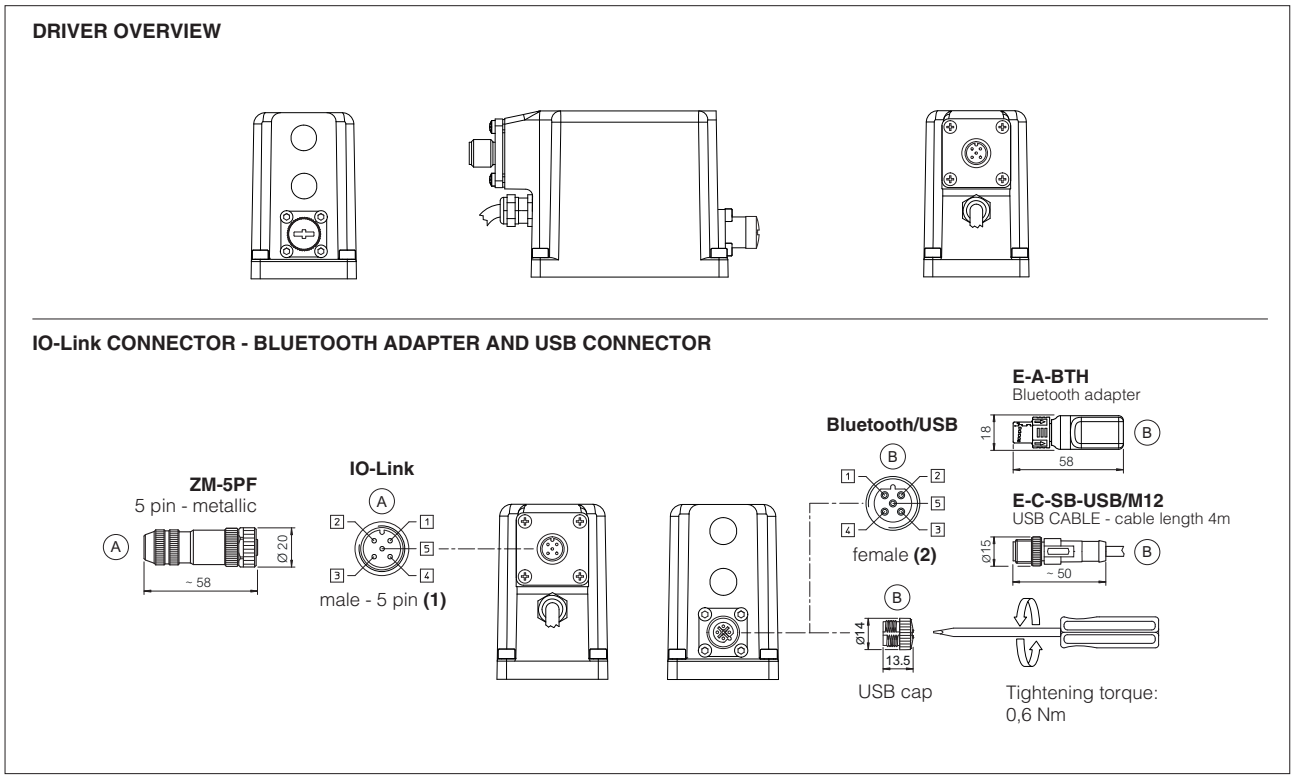

(1) Use of metallic connectors is strongly recommended in order to fulfill EMC requirements **(2)** Pin layout always referred to driver's view

23.9 RES connections layout

DRIVER OVERVIEW

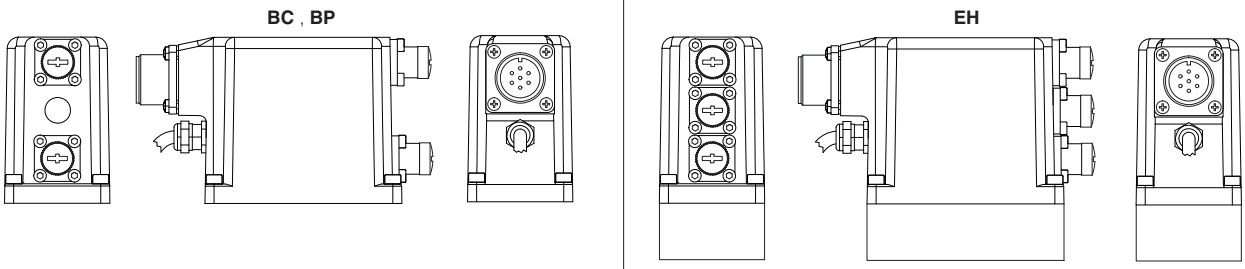

MAIN CONNECTORS

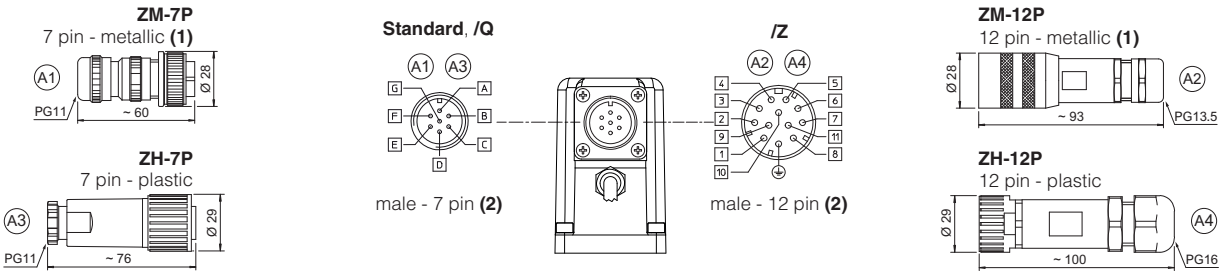

FIELDBUS CONNECTORS

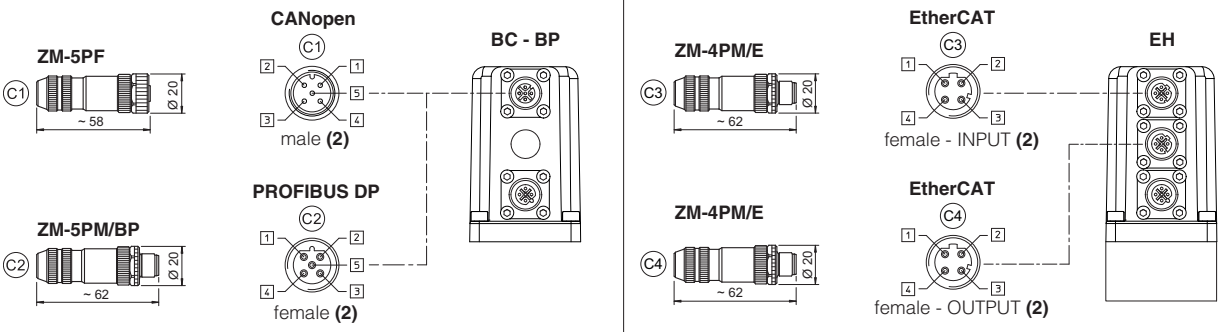

BLUETOOTH ADAPTER AND USB CONNECTOR

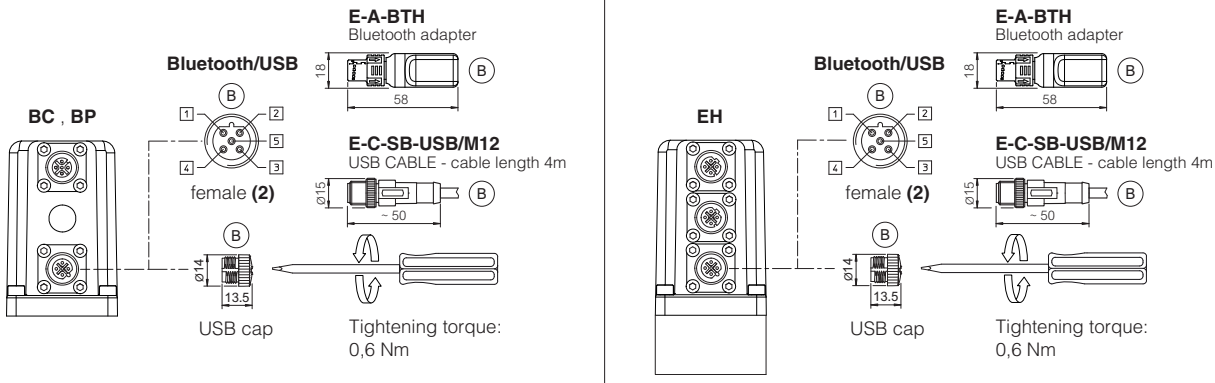

(1) Use of metallic connectors is strongly recommended in order to fulfill EMC requirements **(2)** Pin layout always referred to driver's view

24 CONNECTORS CHARACTERISTICS - to be ordered separately

24.1 Main connectors - 7 pin - for REB-NP and RES

CONNECTOR TYPE	POWER SUPPLY AND SIGNALS	POWER SUPPLY AND SIGNALS
CODE	(A1) ZM-7P	(A3) ZH-7P
Type	7pin female straight circular	7pin female straight circular
Standard	According to MIL-C-5015	According to MIL-C-5015
Material	Metallic	Plastic reinforced with fiber glass
Cable gland	PG11	PG11
Recommended cable	LiYCY 7 x 0,75 mm² max 20 m (logic and power supply) or LiYCY 7 x 1 mm² max 40 m (logic and power supply)	LiYCY 7 x 0,75 mm² max 20 m (logic and power supply) or LiYCY 7 x 1 mm² max 40 m (logic and power supply)
Conductor size	up to 1 mm² - available for 7 wires	up to 1 mm² - available for 7 wires
Connection type	to solder	to solder
Protection (EN 60529)	IP 67	IP 67

24.2 Main connectors - 12 pin - for REB-NP and RES

CONNECTOR TYPE	POWER SUPPLY AND SIGNALS	POWER SUPPLY AND SIGNALS
CODE	(A2) ZM-12P	(A4) ZH-12P
Type	12pin female straight circular	12pin female straight circular
Standard	DIN 43651	DIN 43651
Material	Metallic	Plastic reinforced with fiber glass
Cable gland	PG13,5	PG16
Recommended cable	LiYCY 12 x 0,75 mm² max 20 m (logic and power supply)	LiYCY 10 x 0,14mm² max 40 m (logic) LiYY 3 x 1mm² max 40 m (power supply)
Conductor size	0,5 mm² to 1,5 mm² - available for 12 wires	0,14 mm² to 0,5 mm² - available for 9 wires 0,5 mm² to 1,5 mm² - available for 3 wires
Connection type	to crimp	to crimp
Protection (EN 60529)	IP 67	IP 67

24.3 IO-Link connector - only for REB-IL

CONNECTOR TYPE	IL IO-Link
CODE	(A) ZM-5PF
Type	5pin female straight circular
Standard	M12 coding A – IEC 61076-2-101
Material	Metallic
Cable gland	Pressure nut - cable diameter 6÷8 mm
Recommended cable	5 x 0,75 mm² max 20 m
Connection type	screw terminal
Protection (EN 60529)	IP 67

24.4 Fieldbus communication connectors - only for RES

CONNECTOR TYPE	BC CANopen (1)		BP PROFIBUS DP (1)		EH EtherCAT (2)
CODE	(C1) ZM-5PF	(C2) ZM-5PM	(C1) ZM-5PF/BP	(C2) ZM-5PM/BP	(C1) (C2) ZM-4PM/E
Type	5 pin female straight circular	5 pin male straight circular	5 pin female straight circular	5 pin male straight circular	4 pin male straight circular
Standard	M12 coding A – IEC 61076-2-101		M12 coding B – IEC 61076-2-101		M12 coding D – IEC 61076-2-101
Material	Metallic		Metallic		Metallic
Cable gland	Pressure nut - cable diameter 6÷8 mm		Pressure nut - cable diameter 6÷8 mm		Pressure nut - cable diameter 4÷8 mm
Cable	CANbus Standard (DR 303-1)		PROFIBUS DP Standard		Ethernet standard CAT-5
Connection type	screw terminal		screw terminal		terminal block
Protection (EN 60529)	IP67		IP 67		IP 67

(1) E-TRM-** terminators can be ordered separately - see tech table **GS500**

(2) Internally terminated

25 FASTENING BOLTS AND SEALS

Type	Size	Fastening bolts	Seals
LIMZO LICZO LIRZO	**1** = 16	4 socket head screws M8x45 class 12.9 Tightening torque = 35 Nm	2 OR 108
	2 = 25	4 socket head screws M12x45 class 12.9 Tightening torque = 125 Nm	2 OR 108
	3 = 32	4 socket head screws M16x55 class 12.9 Tightening torque = 300 Nm	2 OR 2043
	4 = 40	4 socket head screws M20x70 class 12.9 Tightening torque = 600 Nm	2 OR 3043
LIMZO LICZO	**5** = 50	4 socket head screws M20x80 class 12.9 Tightening torque = 600 Nm	2 OR 3043
LIMZO	**6** = 63	4 socket head screws M30x90 class 12.9 Tightening torque = 2100 Nm	2 OR 3050
	8 = 80	8 socket head screws M24x90 class 12.9 Tightening torque = 1000 Nm	2 OR 4075

26 COVERS DIMENSIONS [mm]

Size	AxA	øB	C	D	Port Pp - Dr
1 = 16	65x80	3	4	40	-
2 = 25	85x85	5	6	40	-
3 = 32	100x100	5	6	50	-
4 = 40	125x125	5	6	60	G 1/4”
5 = 50	140x140	6	4	70	G 1/4”
6 = 63	180x180	6	4	80	G 3/8”
8 = 80	ø250	8	6	80	G 3/8”

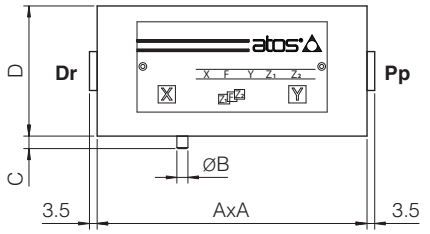

Notes:
size 1 cover is not squared but retangular, dimensions 65x80
size 8 cover is not squared but circular, dimension ø250

27 INSTALLATION DIMENSIONS [mm]

R version for off-board driver

LICZO-R-1 LIMZO-R-1 LIRZO-R-1
LICZO-R-2 LIMZO-R-2 LIRZO-R-2
LICZO-R-3 LIMZO-R-3 LIRZO-R-3

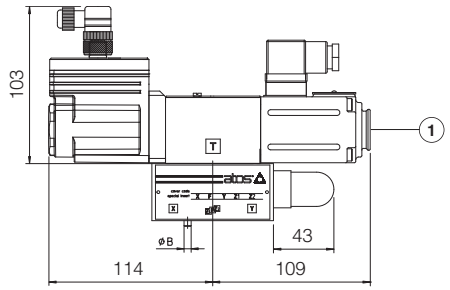

Mass [kg]			
LICZO, LIMZO, LIRZO			Cartridge
Size	Standard	Option /P	SC LI
1 = 16	3,8	-	0,2
2 = 25	4,3	-	0,5
3 = 32	5,6	-	0,9
4 = 40	11,0	12,0	1,7
5 = 50	14,5	15,5	2,9
6 = 63	24,0	25,0	6,7
8 = 80	32,6	33,6	13,1

LICZO-R-4 LIMZO-R-4 LIRZO-R-4
LICZO-R-5 LIMZO-R-5
LIMZO-R-6

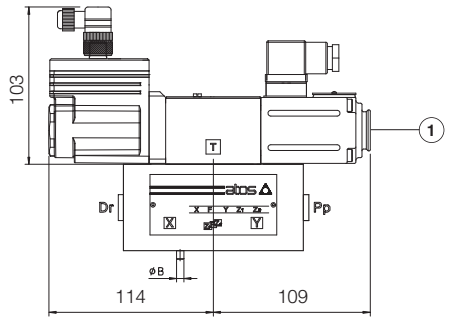

LICZO-R-4/P LIMZO-R-4/P LIRZO-R-4/P
LICZO-R-5/P LIMZO-R-5/P
LIMZO-R-6/P

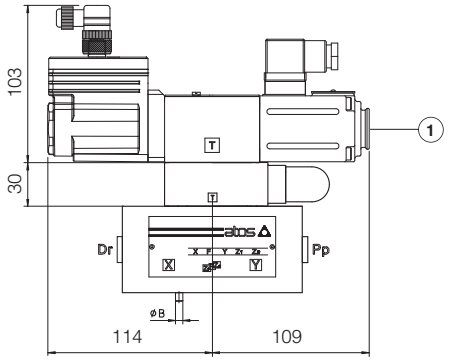

LIMZO-R-8

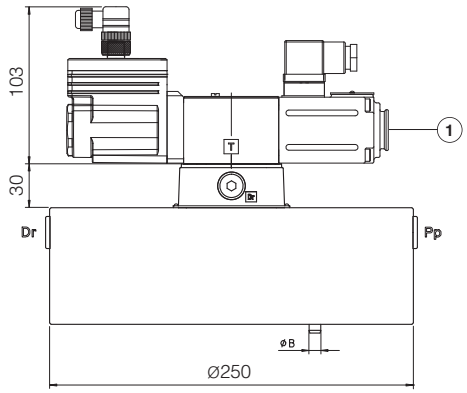

LIMZO-R-8/P

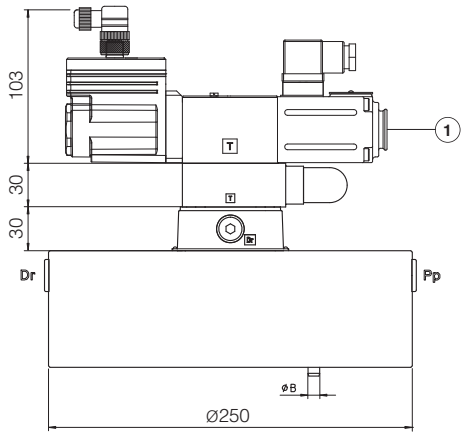

(1) = Air bleeding, see section 20

REB and **RES** versions for on-board driver

Mass [kg]			
LICZO, LIMZO, LIRZO			Cartridge
Size	Standard	Option /P	SC LI
1 = 16	4,3	-	0,2
2 = 25	4,8	-	0,5
3 = 32	6,1	-	0,9
4 = 40	11,5	12,5	1,7
5 = 50	15,0	16,0	2,9
6 = 63	24,5	25,5	6,7
8 = 80	33,1	34,1	13,1

LICZO-RE*-1 LIMZO-RE*-1 LIRZO-RE*-1
LICZO-RE*-2 LIMZO-RE*-2 LIRZO-RE*-2
LICZO-RE*-3 LIMZO-RE*-3 LIRZO-RE*-3

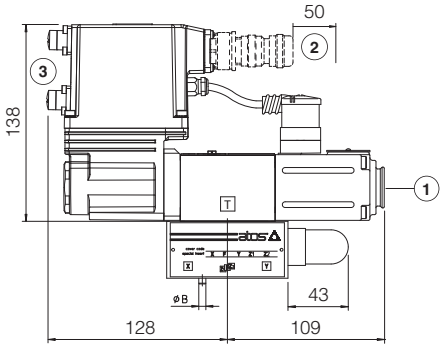

LICZO-RE*-4 LIMZO-RE*-4 LIRZO-RE*-4
LICZO-RE*-5 LIMZO-RE*-5
LIMZO-RE*-6

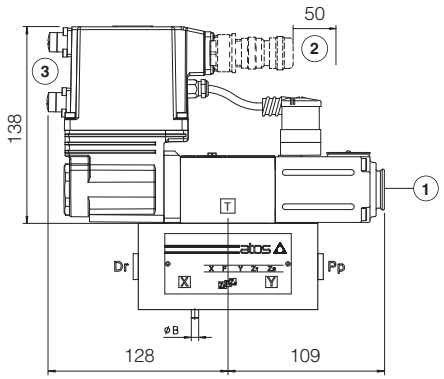

LICZO-RE*-4/P LIMZO-RE*-4/P LIRZO-RE*-4/P
LICZO-RE*-5/P LIMZO-RE*-5/P
LIMZO-RE*-6/P

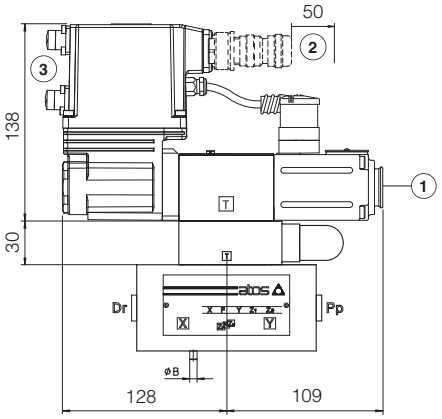

LIMZO-RE*-8

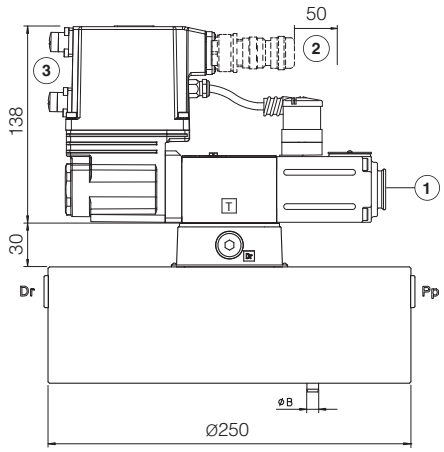

LIMZO-RE*-8/P

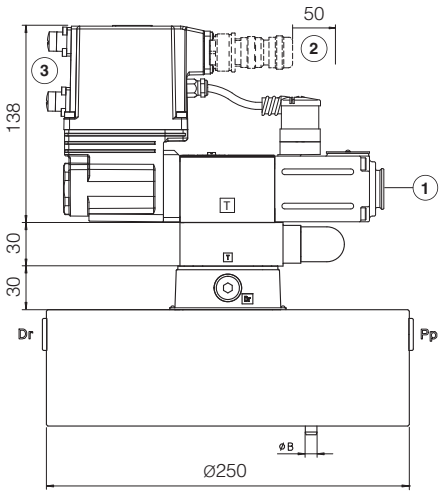

(1) = Air bleeding, see section 20
(2) = Space required for connection cable and for connector removal
(3) = The dimensions of connectors and Bluetooth adapter must be considered, see section 23.7, 23.8 and 23.9

Note: for mounting surface and cavity dimensions, see tech. table P006

REB-EH version for on-board driver

LICZO-RES-EH-1 LIMZO-RES-EH-1 LIRZO-RES-EH-1
LICZO-RES-EH-2 LIMZO-RES-EH-2 LIRZO-RES-EH-2
LICZO-RES-EH-3 LIMZO-RES-EH-3 LIRZO-RES-EH-3

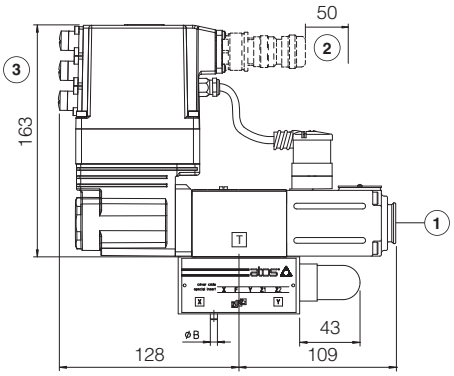

Mass [kg]			
LICZO, LIMZO, LIRZO			Cartridge
Size	Standard	Option /P	SC LI
1 = 16	4,4	-	0,2
2 = 25	4,9	-	0,5
3 = 32	6,2	-	0,9
4 = 40	11,6	12,6	1,7
5 = 50	15,1	16,1	2,9
6 = 63	24,6	25,6	6,7
8 = 80	33,2	34,2	13,1

LICZO-RES-EH-4 LIMZO-RES-EH-4 LIRZO-RES-EH-4
LICZO-RES-EH-5 LIMZO-RES-EH-5
LIMZO-RES-EH-6

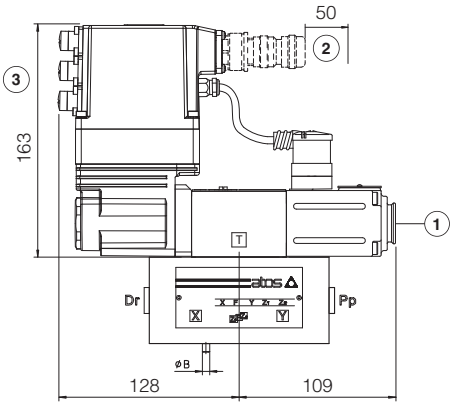

LICZO-RES-EH-4/P LIRZO-RES-EH-4/P
LICZO-RES-EH-5/P

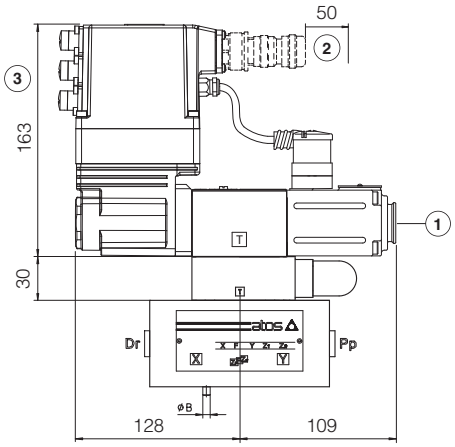

LIMZO-RES-EH-8

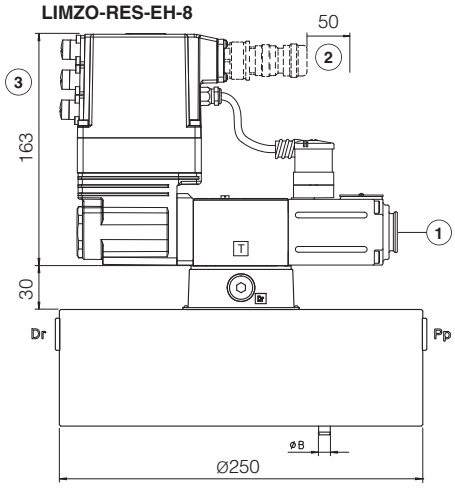

LIMZO-RES-EH-8/P

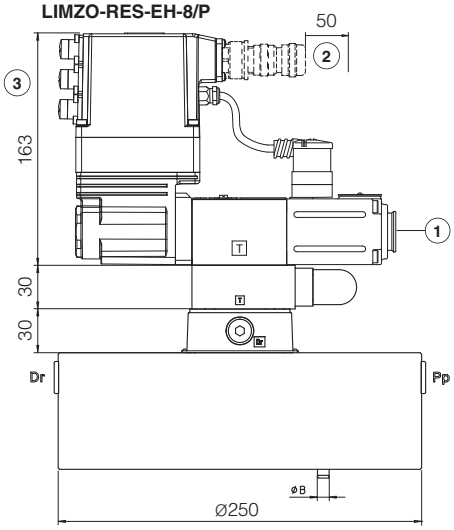

(1) = Air bleeding, see section 20
(2) = Space required for connection cable and for connector removal
(3) = The dimensions of connectors and Bluetooth adapter must be considered, see section 23.7, 23.8 and 23.9

Note: for mounting surface and cavity dimensions, see tech. table P006

28 RELATED DOCUMENTATION

FS001	Basics for digital electrohydraulics	**P006**	Mounting surfaces and cavities for cartridge valves
FS900	Operating and maintenance information for proportional valves	**QB420**	Quickstart for REB valves commissioning
GS203	E-BM-RES digital driver	**QF420**	Quickstart for RES valves commissioning
GS500	Programming tools	**E-MAN-BM-RES**	E-BM-RES user manual (off-board)
GS510	Fieldbus	**E-MAN-RI-REB**	REB user manual
GS520	IO-Link interface	**E-MAN-RI-RES**	RES user manual
K800	Electric and electronic connectors		

Digital proportional relief valves

direct, without transducer

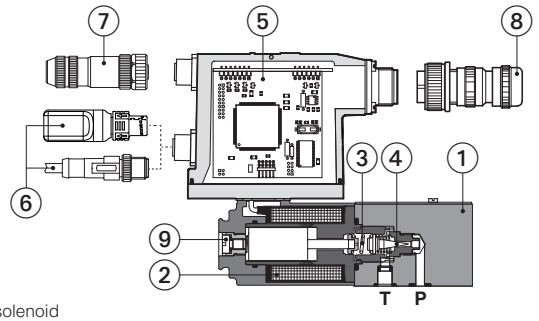

RZMO-AES-BC-010

① Valve body
② Proportional solenoid
③ Spring
④ Poppet
⑤ On-board digital driver
⑥ Bluetooth/USB connection
⑦ Fieldbus connector
⑧ Main connector
⑨ Screw for air bleeding

RZMO-A , RZMO-AEB, RZMO-AES

Poppet type, direct, digital proportional relief valves for pressure open loop controls.

A to be coupled with off-board driver.

AEB basic execution, with on-board digital driver, with analog reference signal or IO-Link interface for digital reference signals, valve settings, and real-time diagnostics.

AES full execution, with on-board digital driver which includes also fieldbus interfaces for digital reference signals, valve settings, and real-time diagnostics.

For AEB and AES, Bluetooth/USB connection is always present for valve settings via mobile App and Atos PC software.

Size: **06** - ISO 4401
Max flow: **4 l/min**
Max pressure: **350 bar**

1 MODEL CODE

RZMO	-	AEB	-	NP	-	010	/	210	/	*	/	*	/	*	*	/	*

Proportional pressure relief valve, direct

A = off-board driver, see section 3
AEB = basic on-board digital driver
AES = full on-board digital driver

IO-Link interface, only for AEB, see section 7 :
NP = Not present **IL** = IO-Link

Fieldbus interfaces, only for AES, see section 8 :
BC = CANopen **EH** = EtherCAT
BP = PROFIBUS DP

Configuration:
010 = regulation on port P, discharge in T (direct operated version)

Max regulated pressure (2):
50 = 50 bar **210** = 210 bar **350**= 350 bar
100 = 100 bar **315** = 315 bar

Electronic options, only for **AEB-NP** and **AES (1)**:
I = current reference input 4÷20 mA
Q = enable signal
Z = double power supply, enable, fault and monitor signals -12 pin connector

Bluetooth option, only for **AEB** and **AES**, see section 6 :
T = Bluetooth adapter supplied with the valve

Coil voltage, only for **A** - see section 16 :
- = standard coil for 24VDC Atos drivers
6 = optional coil for 12VDC Atos drivers
18 = optional coil for low current drivers

Series number

Seals material, see section 12 :
- = NBR
PE = FKM
BT = NBR low temp.

(1) Possible combined options: IQ, IZ (/T Bluetooth adapter option can be combined with all other options)
(2) Special execution with max regulated pressure **500 bar** available on request

2 HYDRAULIC SYMBOLS

RZMO-A

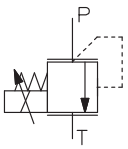

RZMO-AEB RZMO-AES

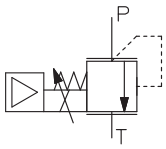

3 OFF-BOARD ELECTRONIC DRIVERS - only for **A**

Drivers model	E-MI-AC-01F		E-MI-AS-IR		E-BM-AS-PS		E-BM-AES
Type	Analog		Digital				
Voltage supply (VDC)	12	24	12	24	12	24	24
Valve coil option	/6	std	/6	std	/6	std	std
Format	plug-in to solenoid				DIN-rail panel		
Tech table	G010		G020		G030		GS050

4 GENERAL NOTES

Atos digital proportionals valves are CE marked according to the applicable directives (e.g. Immunity and Emission EMC Directive).
Installation, wirings and start-up procedures must be performed according to the general prescriptions shown in tech table **FS900** and in the user manuals included in the E-SW-SETUP programming software.

5 VALVE SETTINGS AND PROGRAMMING TOOLS - see tech. table **GS500**

5.1 Atos CONNECT mobile App

Free downloadable App for smartphones and tablets which allows quick access to valve main functional parameters and basic diagnostic information via Bluetooth, thus avoiding physical cable connection and significantly reducing commissioning time.
Atos CONNECT supports Atos digital valve drivers equipped with E-A-BTH adapter or with built-in Bluetooth. It does not support valves with p/Q control or axis controls.

Download on the App Store

GET IT ON Google Play

5.2 E-SW-SETUP PC software

Free downloadable software for PC allows to set all valve functional parameters and to access complete diagnostic information of digital valve drivers via Bluetooth/USB service port.
Atos E-SW-SETUP PC software supports all Atos digital valve drivers and it is available at www.atos.com in MyAtos area.

WARNING: drivers USB port is not isolated! For E-C-SB-USB/M12 cable, the use of E-A-SB-USB/OPT isolator adapter is highly recommended for PC protection

Bluetooth or USB connection

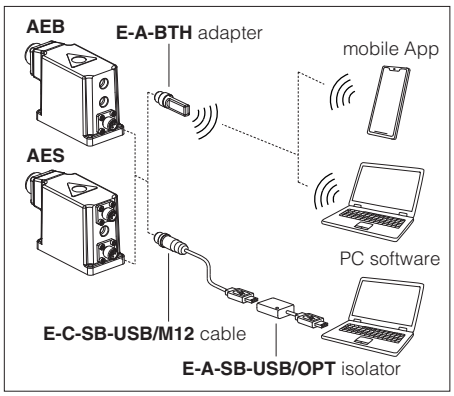

6 BLUETOOTH OPTION - see tech. table **GS500**

T option adds Bluetooth® connectivity to Atos valve drivers thanks to E-A-BTH adapter, which can be left permanently installed on-board, to allow the Bluetooth connection with the valve drivers at any time. E-A-BTH adapter can also be purchased separately and used to connect with any supported Atos digital product.
Bluetooth connection to the valve can be protected against unauthorised access by setting a personal password. The adapter leds visually indicates the status of valve driver and Bluetooth connection.

7 IO-LINK - only for **AEB**, see tech. table **GS520**

IO-Link allows low cost digital communication between the valve and machine central unit. The valve is directly connected to a port of an IO-Link master (point-to-point connection) via low-cost unshielded cables for digital reference, diagnostic and settings. The IO-Link master works as a hub exchanging this information with the machine central unit via fieldbus.

8 FIELDBUS - only for **AES**, see tech. table **GS510**

Fieldbus allows valve direct communication with machine control unit for digital reference, valve diagnostics and settings. These execution allow to operate the valves through fieldbus or analog signals available on the main connector.

9 GENERAL CHARACTERISTICS

Assembly position	Any position
Subplate surface finishing to ISO 4401	Acceptable roughness index: Ra ≤ 0,8, recommended Ra 0,4 – Flatness ratio 0,01/100
MTTFd valves according to EN ISO 13849	150 years, for further details see technical table P007
Ambient temperature range	**A:** **Standard** = -20°C ÷ +70°C **/PE** option = -20°C ÷ +70°C **/BT** option = -40°C ÷ +60°C **AEB, AES:** **Standard** = -20°C ÷ +60°C **/PE** option = -20°C ÷ +60°C **/BT** option = -40°C ÷ +60°C
Storage temperature range	**A:** **Standard** = -20°C ÷ +80°C **/PE** option = -20°C ÷ +80°C **/BT** option = -40°C ÷ +70°C **AEB, AES:** **Standard** = -20°C ÷ +70°C **/PE** option = -20°C ÷ +70°C **/BT** option = -40°C ÷ +70°C
Surface protection	Zinc coating with black passivation, galvanic treatment (driver housing for AEB and AES)
Corrosion resistance	Salt spray test (EN ISO 9227) > 200 h
Vibration resistance	See technical table G004 (for AEB and AES)
Compliance	CE according to EMC directive 2014/30/EU (Immunity: EN 61000-6-2; Emission: EN 61000-6-3) RoHS Directive 2011/65/EU as last update by 2015/863/EU REACH Regulation (EC) n°1907/2006

10 HYDRAULIC CHARACTERISTICS - based on mineral oil ISO VG 46 at 50 °C

Valve model		RZMO-*-010
Max regulated pressure	[bar]	50; 100; 210; 315; 350
Max pressure at port P	[bar]	350
Max pressure at port T	[bar]	210
Min regulated pressure	[bar]	see min. pressure / flow diagram at section 13
Max flow	[l/min]	4
Response time 0-100% step signal (depending on installation) **(1)**	[ms]	≤ 70
Hysteresis		≤ 1,5 [% of max pressure]
Linearity		≤ 3,0 [% of max pressure]
Repeatability		≤ 2,0 [% of max pressure]

Note: above performance data refer to valves coupled with Atos electronic drivers, see section 3

(1) Average response time value; the pressure variation in consequence of a modification of the reference input signal to the valve is affected by the stiffness of the hydraulic circuit: greater is the stiffness of the circuit, faster is the dynamic response

11 ELECTRICAL CHARACTERISTICS

Power supplies	Nominal : +24 VDC Rectified and filtered : VRMS = 20 ÷ 32 VMAX (ripple max 10 % VPP)				
Max power consumption	**A** = 30 W **AEB**, **AES** = 50 W				
Coil voltage code	standard		option /6		option /18
Max. solenoid current	2,6 A		3,25 A		1,5 A
Coil resistance R at 20°C	3 ÷ 3,3 Ω		2 ÷ 2,2 Ω		13 ÷ 13,4 Ω
Analog input signals	Voltage: range ±10 VDC (24 VMAX tolerant) Input impedance: Ri > 50 kΩ Current: range ±20 mA Input impedance: Ri = 500 Ω				
Monitor output	Output range: voltage ±5 VDC @ max 5 mA				
Enable input	Range: 0 ÷ 9 VDC (OFF state), 15 ÷ 24 VDC (ON state), 9 ÷ 15 VDC (not accepted); Input impedance: Ri > 87 kΩ				
Fault output	Output range : 0 ÷ 24 VDC (ON state ≅ VL+ [logic power supply] ; OFF state ≅ 0 V) @ max 50 mA; external negative voltage not allowed (e.g. due to inductive loads)				
Alarms	Solenoid not connected/short circuit, cable break with current reference signal, over/under temperature, current control monitoring, power supplies level				
Insulation class	H (180°) Due to the occurring surface temperatures of the solenoid coils, the European standards ISO 13732-1 and EN982 must be taken into account				
Protection degree to DIN EN60529	**A** = IP65; **AEB**, **AES** = IP66 / IP67 with mating connectors				
Duty factor	Continuous rating (ED=100%)				
Tropicalization	Tropical coating on electronics PCB				
Additional characteristics	Short circuit protection of solenoid's current supply; current control by P.I.D. with rapid solenoid switching; protection against reverse polarity of power supply				
Communication interface	USB Atos ASCII coding	IO-Link Interface and System Specification 1.1.3	CANopen EN50325-4 + DS408	PROFIBUS DP EN50170-2/IEC61158	EtherCAT IEC 61158
Communication physical layer	not insulated USB 2.0+USB OTG	SDCI class port B	optical insulated CAN ISO11898	optical insulated RS485	Fast Ethernet, insulated 100 Base TX
Recommended wiring cable	LiYCY shielded cables, see section 21				

Note: a maximum time of 500 ms (depending on communication type) has to be considered between the driver energizing with the 24 VDC power supply and when the valve is ready to operate. During this time the current to the valve coils is switched to zero.

12 SEALS AND HYDRAULIC FLUIDS - for other fluids not included in below table, consult our technical office

Seals, recommended fluid temperature		NBR seals (standard) = -20°C ÷ +60°C (+80°C for **A**), with HFC hydraulic fluids = -20°C ÷ +50°C FKM seals (/PE option) = -20°C ÷ +80°C NBR low temp. seals (/BT option) = -40°C ÷ +60°C, with HFC hydraulic fluids = -20°C ÷ +50°C		
Recommended viscosity		20 ÷ 100 mm²/s - max allowed range 15 ÷ 380 mm²/s		
Max fluid contamination level	normal operation	ISO4406 class 18/16/13 NAS1638 class 7		see also filter section at www.atos.com or KTF catalog
	longer life	ISO4406 class 16/14/11 NAS1638 class 5		
Hydraulic fluid		**Suitable seals type**	**Classification**	**Ref. Standard**
Mineral oils		NBR, FKM, NBR low temp.	HL, HLP, HLPD, HVLP, HVLPD	DIN 51524
Flame resistant without water		FKM	HFDU, HFDR	ISO 12922
Flame resistant with water		NBR, NBR low temp.	HFC	

13 DIAGRAMS (based on mineral oil ISO VG 46 at 50 °C)

1 Regulation diagrams
with flow rate Q = 1 l/min

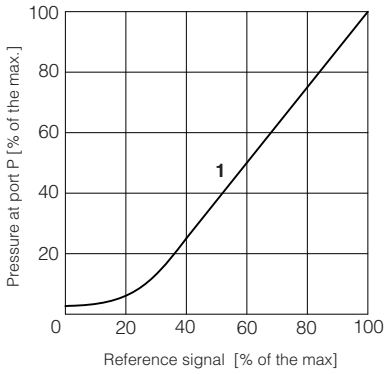

2 Pressure/flow diagrams
with reference signal set at Q = 1 l/min

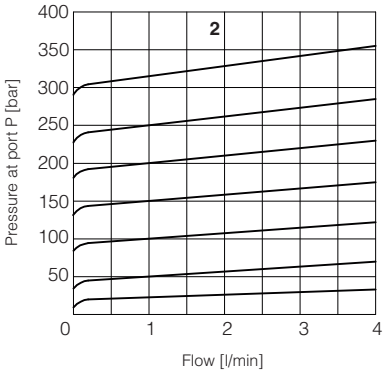

3-6 Min. pressure/flow diagrams
with zero reference signal

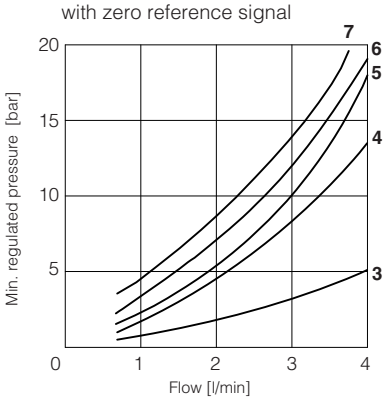

3 = RZMO/50 **4 =** RZMO/100
5 = RZMO/210 **6 =** RZMO/315
7 = RZMO/350

Note: the presence of counter pressure at port T can affect the pressure regulation and the minimum pressure

14 ELECTRONIC OPTIONS - only for **AEB-NP** and **AES**

I = This option provides 4 ÷ 20 mA current reference, instead of the standard 0 ÷ 10 VDC.
Input signal can be reconfigured via software selecting between voltage and current, within a maximum range of ±10 VDC or ±20 mA.
It is normally used in case of long distance between the machine control unit and the valve or where the reference signal can be affected by electrical noise; the valve functioning is disabled in case of reference signal cable breakage.

Q = This option permits to inhibit the valve function without removing the power supply to the driver. Upon disable command the current to the solenoid is zeroed and the valve's spool moves to rest position.
The option /Q is suggested for all cases where the valve has to be frequently inhibited during the machine cycle – see 18.5 for signal specifications.

Z = This option provides, on the 12 pin main connector, the following additional features:
Fault output signal - see 18.6
Enable input signal - see above option /Q
Power supply for driver's logics and communication - see 18.2

15 POSSIBLE COMBINED OPTIONS

Electronic options: /IQ, /IZ

Note: **/T** Bluetooth adapter option can be combined with all other options

16 COIL VOLTAGE OPTIONS - only for **A**

6 = Optional coil to be used with Atos drivers with power supply 12 VDC.
18 = Optional coil to be used with electronic drivers not supplied by Atos.

17 AIR BLEEDING

At the first valve commissioning the air eventually trapped inside the solenoid must be bled-off through the screw ① located at the rear side of the solenoid housing.
The presence of air may cause pressure instability and vibrations.

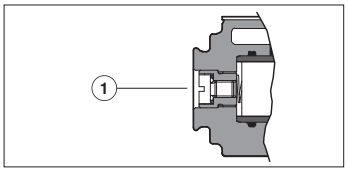

18 POWER SUPPLY AND SIGNALS SPECIFICATIONS - only for **AEB-NP** and **AES**

Generic electrical output signals of the valve (e.g. fault or monitor signals) must not be directly used to activate safety functions, like to switch-ON/OFF the machine's safety components, as prescribed by the European standards (Safety requirements of fluid technology systems and components-hydraulics, ISO 4413).

For **AEB-IL** signals see section

18.1 Power supply (V+ and V0)

The power supply must be appropriately stabilized or rectified and filtered: apply at least a 10000 μF/40 V capacitance to single phase rectifiers or a 4700 μF/40 V capacitance to three phase rectifiers. In case of separate power supply see 18.2.

⚠ A safety fuse is required in series to each power supply: 2,5 A time lag fuse.

18.2 Power supply for driver's logic and communication (VL+ and VL0) - only for **/Z** option

The power supply for driver's logic and communication must be appropriately stabilized or rectified and filtered: apply at least a 10000 μF/40 V capacitance to single phase rectifiers or a 4700 μF/40 V capacitance to three phase rectifiers.
The separate power supply for driver's logic on pin 9 and 10, allow to remove solenoid power supply from pin 1 and 2 maintaining active the diagnostics, USB and fieldbus communications.

⚠ A safety fuse is required in series to each driver's logic and communication power supply: 500 mA fast fuse.

18.3 Reference input signal (INPUT+)

The driver controls in closed loop the current to the valve proportionally to the external reference input signal.
Reference input signal is factory preset according to selected valve code, defaults are 0 ÷ 10 VDC for standard and 4 ÷ 20 mA for /I option.
Input signal can be reconfigured via software selecting between voltage and current, within a maximum range of ±10 VDC or ± 20 mA.
Drivers with fieldbus interface (BC, BP, EH) can be software set to receive reference signal directly from the machine control unit (fieldbus reference). Analog reference input signal can be used as on-off commands with input range 0 ÷ 24VDC.

18.4 Monitor output signal (MONITOR)

The driver generates an analog output signal (MONITOR) proportional to the actual coil current of the valve; the monitor output signal can be software set to show other signals available in the driver (e.g. analog reference, fieldbus reference).
Monitor output signal is factory preset according to selected valve code, default settings is 0 ÷ 5 VDC (1V = 1A).
Output signal can be reconfigured via software, within a maximum range of ±5 VDC.

18.5 Enable input signal (ENABLE) - not for standard

To enable the driver, supply a 24 VDC on pin 3 (pin C): Enable input signal allows to enable/disable the current supply to the solenoid, without removing the electrical power supply to the driver; it is used to active the communication and the other driver functions when the valve must be disabled for safety reasons. This condition **does not comply** with norms IEC 61508 and ISO 13849.
Enable input signal can be used as generic digital input by software selection.

18.6 Fault output signal (FAULT) - only for **/Z** option

Fault output signal indicates fault conditions of the driver (solenoid short circuits/not connected, reference signal broken for 4 ÷ 20 mA input, etc.).
Fault presence corresponds to 0 VDC, normal working corresponds to 24 VDC.
Fault status is not affected by the Enable input signal.

19 IO-LINK SIGNALS SPECIFICATIONS - only for **AEB-IL**

19.1 Power supply for IO-Link communication (L+ and L-)

The IO-Link master provides dedicated 24 VDC power supply for IO-Link communication.
Maximum power consumption: 2 W
Internal electrical isolation of power L+, L- from P24, N24

19.2 Power supply for driver's logic and valve regulation (P24 and N24)

The IO-Link master provides dedicated 24 VDC power supply for valve regulation, logics and diagnostics.
Maximum power consumption: 50 W
Internal electrical isolation of power P24, N24 from L+, L-

19.3 IO-Link data line (C/Q)

C/Q signal is used to establish communication between IO-Link master and valve.

20 ELECTRONIC CONNECTIONS

20.1 Main connector signals - 7 pin (A1) Standard and /Q option - for AEB-NP and AES

PIN	Standard	/Q	TECHNICAL SPECIFICATIONS	NOTES
A	**V+**		Power supply 24 VDC	Input - power supply
B	**V0**		Power supply 0 VDC	Gnd - power supply
C	**AGND**		Analog ground	Gnd - analog signal
		ENABLE	Enable (24 VDC) or disable (0 VDC) the driver, referred to V0	Input - on/off signal
D	**INPUT+**		Reference input signal: ±10 V**DC** / ±20 mA maximum range Defaults are 0 ÷ 10 VDC for standard and 4 ÷ 20 mA for /I option	Input - analog signal **Software selectable**
E	**INPUT-**		Negative reference input signal for INPUT+	Input - analog signal
F	**MONITOR** referred to: AGND | V0		Monitor output signal: ±5 VDC maximum range Default is 0 ÷ 5 VDC (1V = 1A)	Output - analog signal **Software selectable**
G	**EARTH**		Internally connected to driver housing	

20.2 Main connector signals - 12 pin (A2) /Z option - for AEB-NP and AES

PIN	/Z	TECHNICAL SPECIFICATIONS	NOTES
1	**V+**	Power supply 24 VDC	Input - power supply
2	**V0**	Power supply 0 VDC	Gnd - power supply
3	**ENABLE**	Enable (24 VDC) or disable (0 VDC) the driver, referred to VL0	Input - on/off signal
4	**INPUT+**	Reference input signal: ±10 VDC / ±20 mA maximum range Defaults are 0 ÷ 10 VDC for standard and 4 ÷ 20 mA for /I option	Input - analog signal **Software selectable**
5	**INPUT-**	Negative reference input signal for INPUT+	Input - analog signal
6	**MONITOR**	Monitor output signal: ±5 VDC maximum range, referred to VL0 Default is 0 ÷ 5 VDC (1V = 1A)	Output - analog signal **Software selectable**
7	**NC**	Do not connect	
8	**NC**	Do not connect	
9	**VL+**	Power supply 24 VDC for driver's logic and communication	Input - power supply
10	**VL0**	Power supply 0 VDC for driver's logic and communication	Gnd - power supply
11	**FAULT**	Fault (0 VDC) or normal working (24 VDC), referred to VL0	Output - on/off signal
PE	**EARTH**	Internally connected to driver housing	

Note: do not disconnect VL0 before VL+ when the driver is connected to PC USB port

20.3 IO-Link connector signals - M12 - 5 pin - Coding A, port class B (A) only for AEB-IL

PIN	SIGNAL	TECHNICAL SPECIFICATIONS	NOTES
1	**L+**	Power supply 24 VDC for IO-Link communication	Input - power supply
2	**P24**	Power supply 24 VDC for valve regulation, logics and diagnostics	Input - power supply
3	**L-**	Power supply 0 VDC for IO-Link communication	Gnd - power supply
4	**C/Q**	IO-Link data line	Input / Output - signal
5	**N24**	Power supply 0 VDC for valve regulation, logics and diagnostics	Gnd - power supply

20.4 Communication connectors - for AEB (B) and AES (B) - (C)

(B) **USB connector - M12 - 5 pin** always present

PIN	SIGNAL	TECHNICAL SPECIFICATION (1)
1	**+5V_USB**	Power supply
2	**ID**	Identification
3	**GND_USB**	Signal zero data line
4	**D-**	Data line -
5	**D+**	Data line +

(C1) **BC fieldbus execution, connector - M12 - 5 pin (2)**

PIN	SIGNAL	TECHNICAL SPECIFICATION (1)
1	**CAN_SHLD**	Shield
2	**NC**	do not connect
3	**CAN_GND**	Signal zero data line
4	**CAN_H**	Bus line (high)
5	**CAN_L**	Bus line (low)

(C2) **BP fieldbus execution, connector - M12 - 5 pin (2)**

PIN	SIGNAL	TECHNICAL SPECIFICATION (1)
1	**+5V**	Termination supply signal
2	**LINE-A**	Bus line (high)
3	**DGND**	Data line and termination signal zero
4	**LINE-B**	Bus line (low)
5	**SHIELD**	

(1) Shield connection on connector's housing is recommended

(C3) (C4) **EH fieldbus execution, connector - M12 - 4 pin (2)**

PIN	SIGNAL	TECHNICAL SPECIFICATION (1)
1	**TX+**	Transmitter
2	**RX+**	Receiver
3	**TX-**	Transmitter
4	**RX-**	Receiver
Housing	**SHIELD**	

(2) Only for **AES** execution

20.5 Solenoid connection - only for A

PIN	SIGNAL	TECHNICAL SPECIFICATION	Connector code 666
1	**COIL**	Power supply	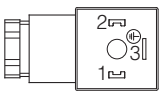
2	**COIL**	Power supply	
3	**GND**	Ground	

20.6 AEB-NP connections layout

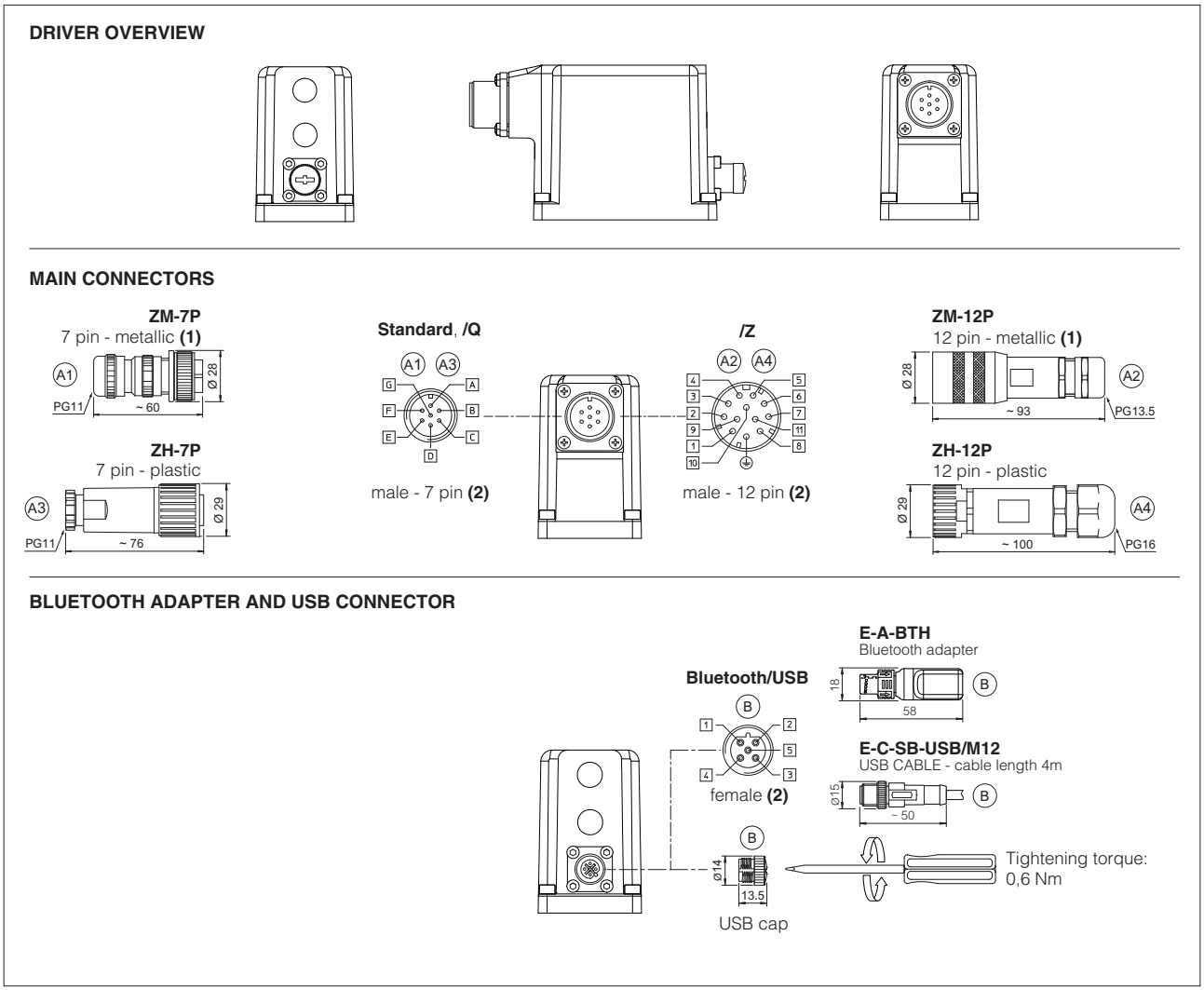

(1) Use of metallic connectors is strongly recommended in order to fulfill EMC requirements **(2)** Pin layout always referred to driver's view

20.7 AEB-IL connections layout

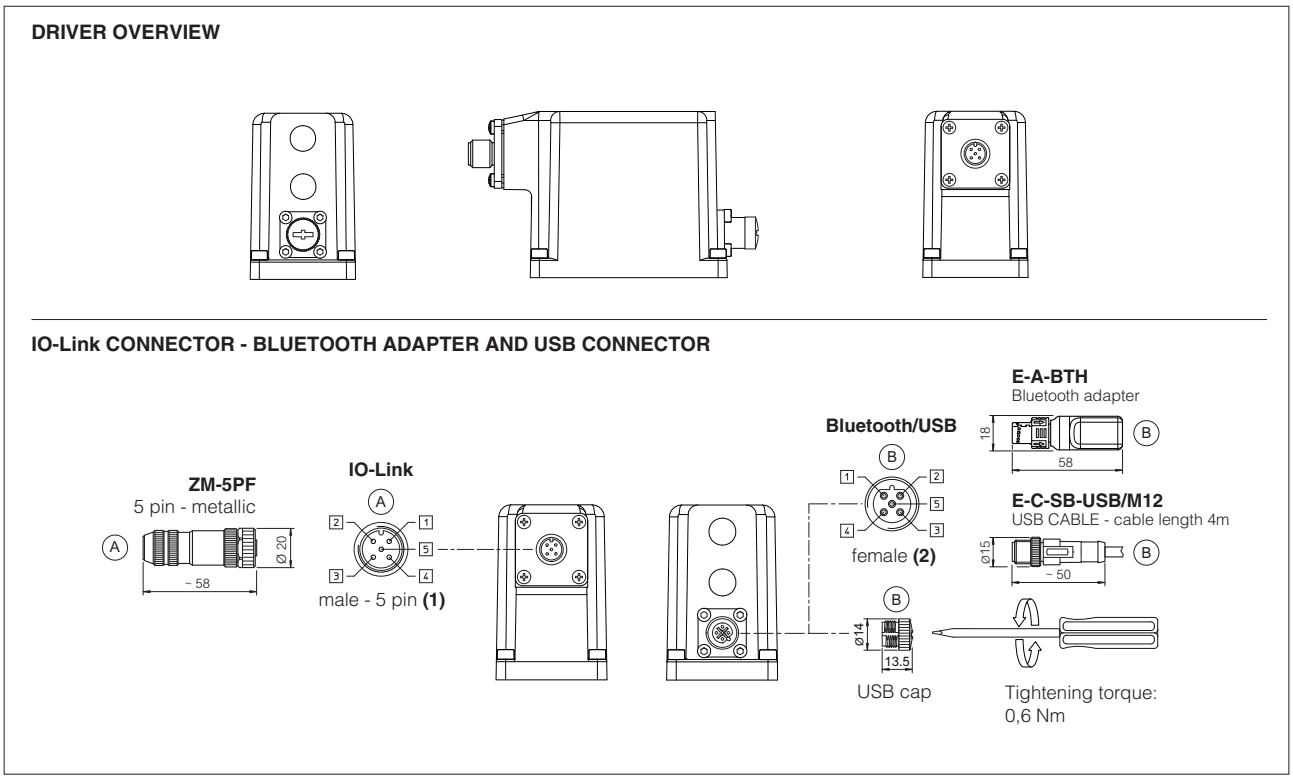

(1) Use of metallic connectors is strongly recommended in order to fulfill EMC requirements **(2)** Pin layout always referred to driver's view

20.8 AES connections layout

DRIVER OVERVIEW

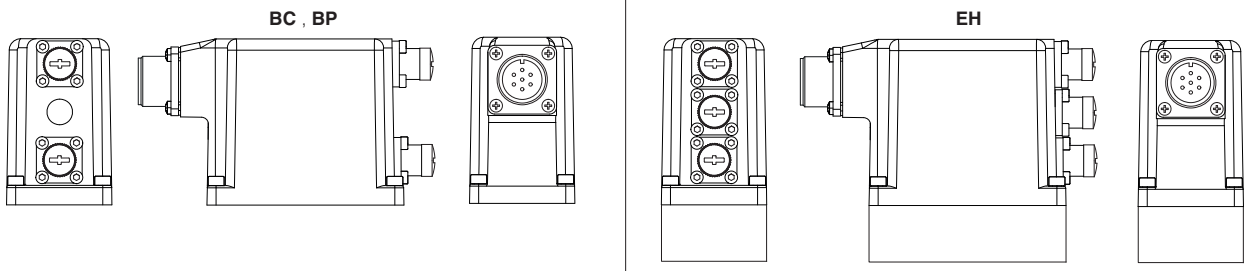

MAIN CONNECTORS

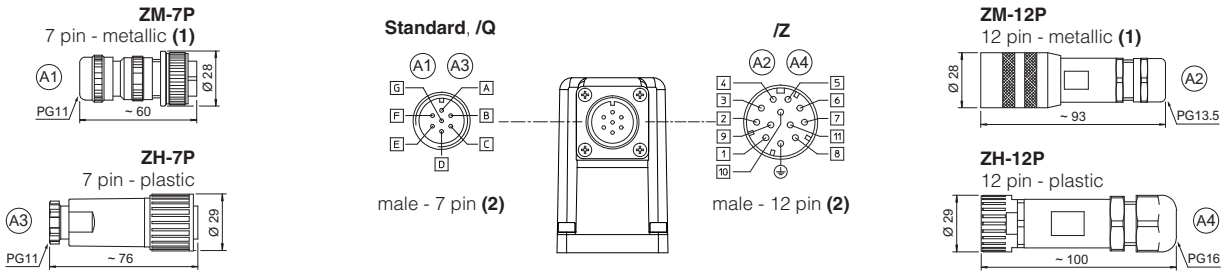

FIELDBUS CONNECTORS

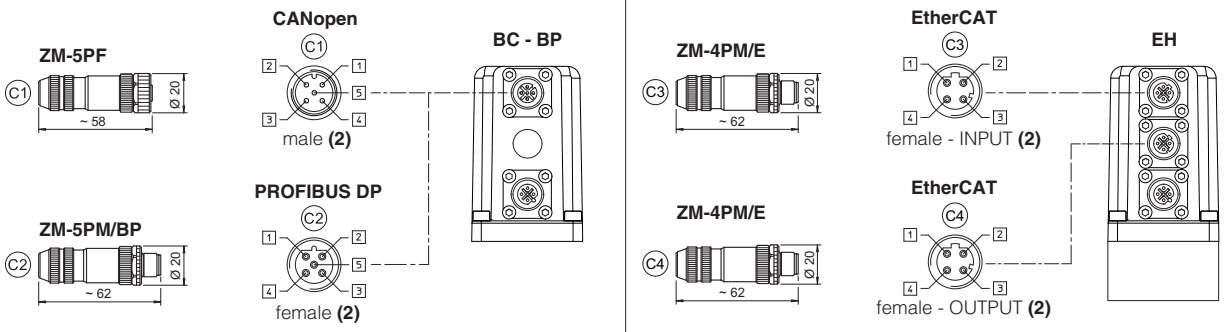

BLUETOOTH ADAPTER AND USB CONNECTOR

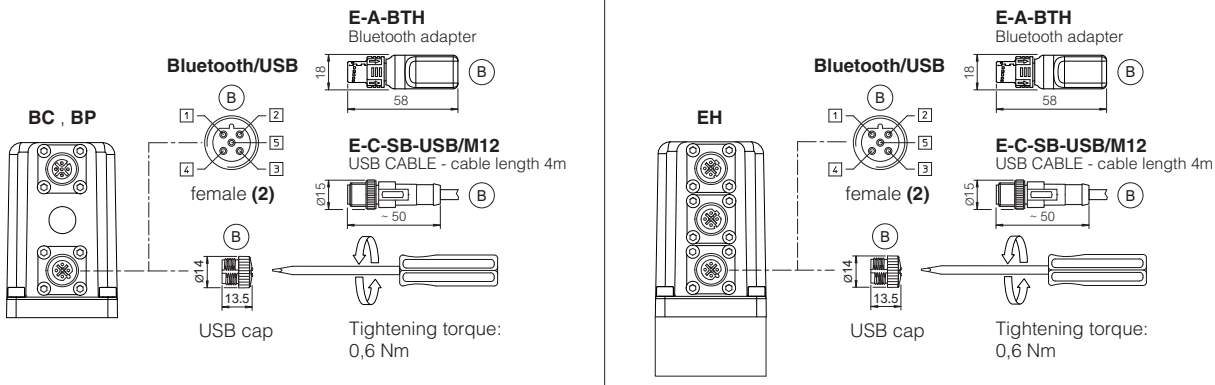

(1) Use of metallic connectors is strongly recommended in order to fulfill EMC requirements **(2)** Pin layout always referred to driver's view

21 CONNECTORS CHARACTERISTICS - to be ordered separately

21.1 Main connectors - 7 pin - for AEB-NP and AES

CONNECTOR TYPE	POWER SUPPLY AND SIGNALS	POWER SUPPLY AND SIGNALS
CODE	A1 ZM-7P	A3 ZH-7P
Type	7pin female straight circular	7pin female straight circular
Standard	According to MIL-C-5015	According to MIL-C-5015
Material	Metallic	Plastic reinforced with fiber glass
Cable gland	PG11	PG11
Recommended cable	LiYCY 7 x 0,75 mm^2 max 20 m (logic and power supply) or LiYCY 7 x 1 mm^2 max 40 m (logic and power supply)	LiYCY 7 x 0,75 mm^2 max 20 m (logic and power supply) or LiYCY 7 x 1 mm^2 max 40 m (logic and power supply)
Conductor size	up to 1 mm^2 - available for 7 wires	up to 1 mm^2 - available for 7 wires
Connection type	to solder	to solder
Protection (EN 60529)	IP 67	IP 67

21.2 Main connectors - 12 pin - for AEB-NP and AES

CONNECTOR TYPE	POWER SUPPLY AND SIGNALS	POWER SUPPLY AND SIGNALS
CODE	A2 ZM-12P	A4 ZH-12P
Type	12pin female straight circular	12pin female straight circular
Standard	DIN 43651	DIN 43651
Material	Metallic	Plastic reinforced with fiber glass
Cable gland	PG13,5	PG16
Recommended cable	LiYCY 12 x 0,75 mm^2 max 20 m (logic and power supply)	LiYCY 10 x 0,14mm^2 max 40 m (logic) LiYY 3 x 1mm^2 max 40 m (power supply)
Conductor size	0,5 mm^2 to 1,5 mm^2 - available for 12 wires	0,14 mm^2 to 0,5 mm^2 - available for 9 wires 0,5 mm^2 to 1,5 mm^2 - available for 3 wires
Connection type	to crimp	to crimp
Protection (EN 60529)	IP 67	IP 67

CONNECTOR TYPE	IL IO-Link
CODE	A ZM-5PF
Type	5pin female straight circular
Standard	M12 coding A – IEC 61076-2-101
Material	Metallic
Cable gland	Pressure nut - cable diameter 6÷8 mm
Recommended cable	5 x 0,75 mm^2 max 20 m
Connection type	screw terminal
Protection (EN 60529)	IP 67

21.4 Fieldbus communication connectors - only for AES

CONNECTOR TYPE	BC CANopen (1)		BP PROFIBUS DP (1)		EH EtherCAT (2)
CODE	C1 ZM-5PF	C2 ZM-5PM	C1 ZM-5PF/BP	C2 ZM-5PM/BP	C1 C2 ZM-4PM/E
Type	5 pin female straight circular	5 pin male straight circular	5 pin female straight circular	5 pin male straight circular	4 pin male straight circular
Standard	M12 coding A – IEC 61076-2-101		M12 coding B – IEC 61076-2-101		M12 coding D – IEC 61076-2-101
Material	Metallic		Metallic		Metallic
Cable gland	Pressure nut - cable diameter 6÷8 mm		Pressure nut - cable diameter 6÷8 mm		Pressure nut - cable diameter 4÷8 mm
Cable	CANbus Standard (DR 303-1)		PROFIBUS DP Standard		Ethernet standard CAT-5
Connection type	screw terminal		screw terminal		terminal block
Protection (EN 60529)	IP67		IP 67		IP 67

(1) E-TRM-** terminators can be ordered separately - see tech table **GS500**

(2) Internally terminated

22 FASTENING BOLTS AND SEALS

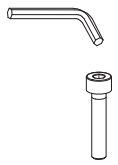	**Fastening bolts:** 4 socket head screws M5x50 class 12.9 Tightening torque = 8 Nm
	Seals: 2 OR 108 Diameter of ports P, T: Ø 5 mm

23 INSTALLATION DIMENSIONS [mm]

ISO 4401: 2005
Mounting surface: 4401-03-02-0-05 (see table P005)
(without ports A and B)

Mass [kg]		
A	**AEB, AES**	**AES-EH**
1,8	2,3	2,4

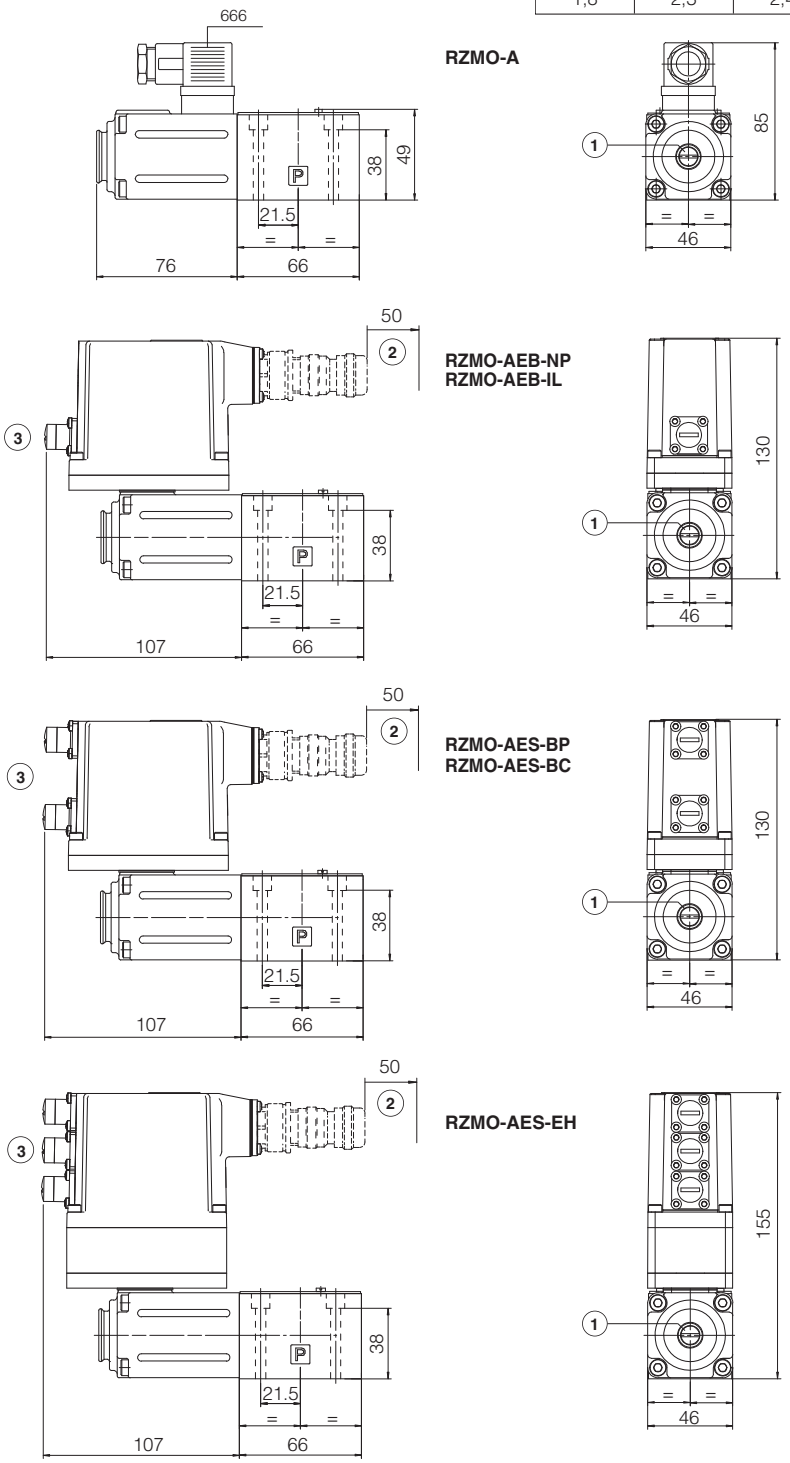

(1) = Air bleeding, see section 16 (2) = Space required for connection cable and for connector removal

(3) = The dimensions of connectors and Bluetooth adapter must be considered, see section 20.6, 20.7 and 20.8

24 RELATED DOCUMENTATION

FS001	Basics for digital electrohydraulics	**K800**	Electric and electronic connectors
FS900	Operating and maintenance information for proportional valves	**P005**	Mounting surfaces for electrohydraulic valves
G010	E-MI-AC analog driver	**QB200**	Quickstart for AEB valves commissioning
G020	E-MI-AS-IR digital driver	**QF200**	Quickstart for AES valves commissioning
G030	E-BM-AS digital driver	**E-MAN-MI-AS**	E-MI-AS-IR user manual (off-board)
GS050	E-BM-AES digital driver	**E-MAN-BM-AS**	E-BM-AS user manual (off-board)
GS500	Programming tools	**E-MAN-BM-AES**	E-BM-AES user manual (off-board)
GS510	Fieldbus	**E-MAN-RI-AEB**	AEB user manual
GS520	IO-Link interface	**E-MAN-RI-AES**	AES user manual

Proportional relief valves

direct, without transducer

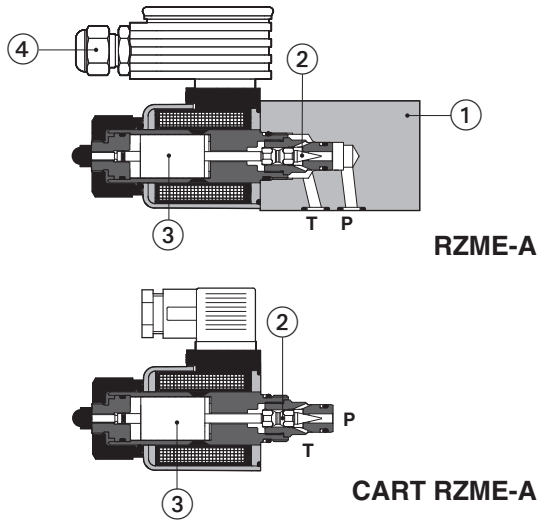

① Valve body
② Poppet
③ Proportional solenoid
④ E-MI-AS-IR digital driver (to be ordered separately)

RZME-A, CART RZME-A

Poppet type, direct, proportional pressure relief valves for open loop pressure controls.

They operate in association with off-board driver, which supply the proportional valves with proper current to align the valve regulation to the reference signal supplied to the driver.

They are available in following executions:

RZME: subplate mounting, ISO size 06
CART RZME: M20 cartridge execution

The solenoids are certified according to North American standard **cURus**.

Size: **06** - ISO 4401 (RZME); **M20** (CART RZME)
Max flow: **4 l/min**
Max pressure: **420 bar**

For cavity CART RZME see section 15

1 MODEL CODE

RZME	-	A	-	010	/	315	-	*	/	*	*	/	*

Proportional
pressure relief valve, direct

RZME = subplate mounting
CART RZME = cartridge execution

A = for off-board driver, see section 3

Configuration:
010 = regulation on port P, discharge in T

Max regulated pressure:
50 = 50 bar
100 = 100 bar
210 = 210 bar
315 = 315 bar
420 = 420 bar

Coil with special connectors, see section 11 :
- = omit for standard DIN connector
J = AMP Junior Timer connector
K = Deutsch connector
S = Lead Wire connection

Coil voltage, see section 10 :
- = standard coil for 24 VDC Atos drivers
6 = optional coil for 12 VDC Atos drivers
18 = optional coil for low current drivers **(1)**

Series number

Seals material,
see section 8 :
- = NBR
PE = FKM
BT = HNBR

(1) Select valve's coil voltage **/18** in case of electronic drivers not supplied by Atos, with power supply 24 VDC and with max current limited to 1A

2 HYDRAULIC SYMBOL

RZME-A
CART RZME-A

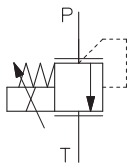

3 OFF-BOARD ELECTRONIC DRIVERS

Drivers model	E-MI-AC-01F **(1)**		E-MI-AS-IR **(1)**		E-BM-AS-PS		E-BM-AES
Type	Analog		Digital				
Voltage supply (VDC)	12	24	12	24	12	24	24
Valve coil option	/6	std	/6	std	/6	std	std
Format	plug-in to solenoid				DIN-rail panel		
Tech table	G010		G020		G030		GS050

(1) For **CART RZME** the electronic driver may interfere with the manifold surface.
Please check the installation dimensions at section 15

4 GENERAL NOTES

Atos digital proportionals valves are CE marked according to the applicable directives (e.g. Immunity and Emission EMC Directive).
Installation, wirings and start-up procedures must be performed according to the general prescriptions shown in tech table **FS900** and in the installation notes supply with relevant components.

5 GENERAL CHARACTERISTICS

Assembly position	Any position
Subplate surface finishing to ISO 4401	Acceptable roughness index: Ra ≤ 0,8, recommended Ra 0,4 – Flatness ratio 0,01/100
MTTFd valves according to EN ISO 13849	150 years, see technical table P007
Ambient temperature range	**Standard** = -20°C ÷ +70°C **/PE** option = -20°C ÷ +70°C **/BT** option = -40°C ÷ +60°C
Storage temperature range	**Standard** = -20°C ÷ +80°C **/PE** option = -20°C ÷ +80°C **/BT** option = -40°C ÷ +70°C
Surface protection	Zinc coating with black passivation
Corrosion resistance	Salt spray test (EN ISO 9227) > 200 h
Conformity	CE according to EMC directive 2014/30/EU (Immunity: EN 61000-6-2; Emission: EN 61000-6-3) RoHS Directive 2011/65/EU as last update by 2015/863/EU REACH Regulation (EC) n°1907/2006

6 HYDRAULIC CHARACTERISTICS

Valve model	**RZME-A-010**
Max regulated pressure	50; 100; 210; 315; 420;
Min. regulated pressure [bar]	see min. pressure / flow diagrams at section 9
Max. pressure at port P [bar]	420
Max. pressure at port T [bar]	210
Max. flow [l/min]	4
Response time 0-100% step signal **(1)** [ms] (depending on installation)	≤ 70
Hysteresis [% of the max pressure]	≤ 3
Linearity [% of the max pressure]	± 3
Repeatability [% of the max pressure]	≤ 2

Note: above performance data refer to valves coupled with Atos electronic drivers, see section 3

(1) Average response time values; the pressure variation in consequence of a modification of the reference input signal to the valve is affected by the stiffness of the hydraulic circuit: greater is the stiffness of the circuit, faster is the dynamic response

7 ELECTRICAL CHARACTERISTICS

Coil voltage code	**Standard** standard coil to be used with Atos drivers with power supply 24VDC	option **/6** optional coil to be used with Atos drivers with power supply 12 VDC	option **/18** optional coil to be used with electronic drivers not supplied by Atos, with power supply 24 VDC and max current limited to 1A
Max. solenoid current	2,3 A	2,7 A	1,1 A
Coil resistance R at 20°C	3,1 Ω	2,1 Ω	13,1 Ω
Insulation class	H (180°) Due to the occurring surface temperatures of the solenoid coils, the European standards ISO 13732-1 and EN982 must be taken into account		
Protection degree to DIN EN60529	**IP 65** (with connectors 666 correctly assembled)		
Duty factor	Continuous rating (ED=100%)		
Certification	**cURus** North American Standards		

8 SEALS AND HYDRAULIC FLUIDS - for other fluids not included in below table, consult our technical office

Seals, recommended fluid temperature		NBR seals (standard) = -20°C ÷ +80°C, with HFC hydraulic fluids = -20°C ÷ +50°C FKM seals (/PE option) = -20°C ÷ +80°C HNBR seals (/BT option) = -40°C ÷ +60°C, with HFC hydraulic fluids = -40°C ÷ +50°C		
Recommended viscosity		20 ÷ 100 mm²/s - max allowed range 15 ÷ 380 mm²/s		
Max fluid contamination level	normal operation	ISO4406 class 18/16/13 NAS1638 class 7		see also filter section at www.atos.com or KTF catalog
	longer life	ISO4406 class 16/14/11 NAS1638 class 5		
Hydraulic fluid		**Suitable seals type**	**Classification**	**Ref. Standard**
Mineral oils		NBR, FKM, HNBR	HL, HLP, HLPD, HVLP, HVLPD	DIN 51524
Flame resistant without water		FKM	HFDU, HFDR	ISO 12922
Flame resistant with water		NBR, HNBR	HFC	

9 DIAGRAMS (based on mineral oil ISO VG 46 at 50 °C)

Regulation diagrams - with flow rate Q = 1 l/min

1 = regulation characteristic linearized with Atos digital divers E-MI-AS-IR, E-BM-AS, E-BM-AES using Atos E-SW-SETUP software

2 = regulation characteristic without linearization

Note: the presence of counter pressure at port T can affect the effective pressure regulation

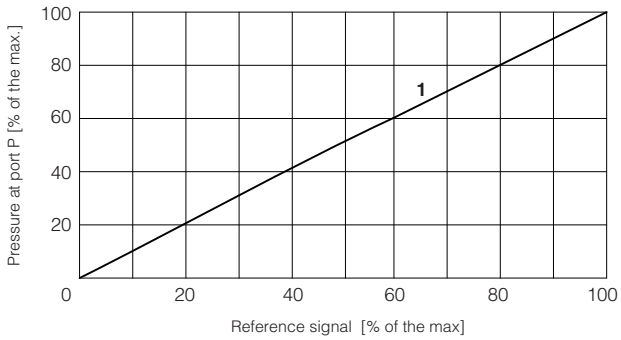

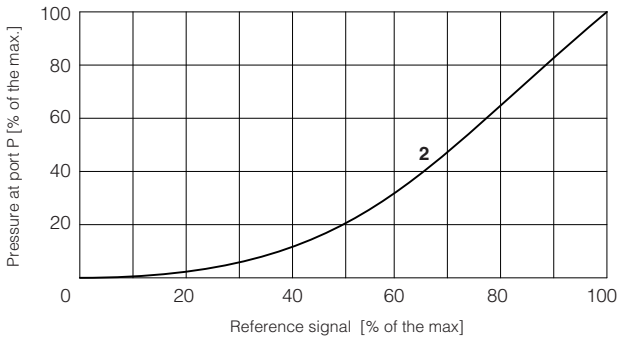

3 = Pressure/flow diagrams
with reference signal set at Q = 1 l/min

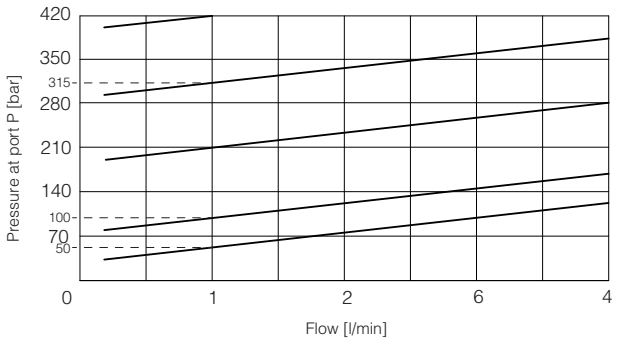

4-7 = Min. pressure/flow diagrams
with zero reference signal

4 = pressure range: 50
5 = pressure range: 100
6 = pressure range: 210
7 = pressure range: 315
8 = pressure range: 420

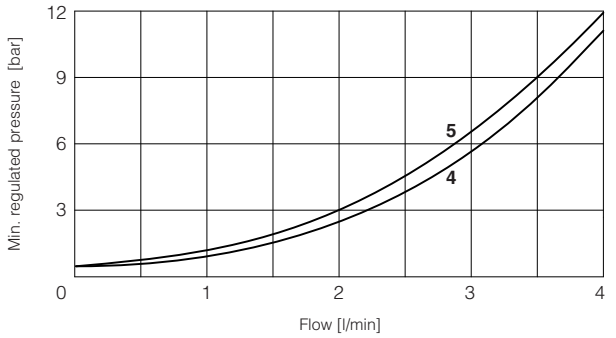

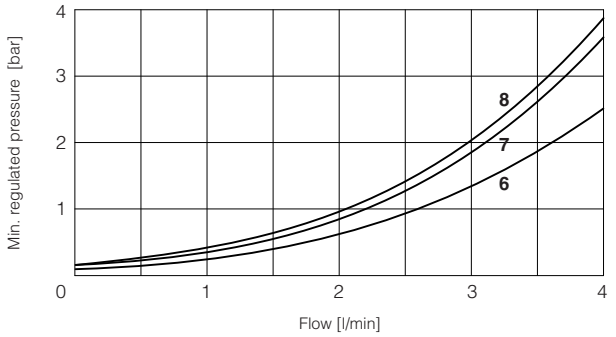

10 COIL VOLTAGE OPTIONS

6 = Optional coil to be used with Atos drivers with power supply 12 VDC.

18 = Optional coil to be used with electronic drivers not supplied by Atos, with power supply 24 VDC and with max current limited to 1A.

11 COILS WITH SPECIAL CONNECTORS

J option

Coil type COZEJ
AMP Junior Timer connector
Protection degree IP67

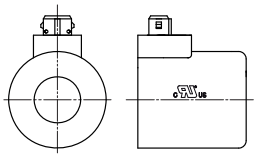

K option

Coil type COZEK
Deutsch connector, DT-04-2P male
Protection degree IP67

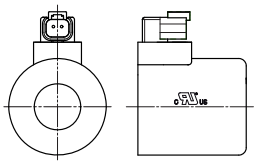

S option

Coil type COZES
Lead Wire connection
Cable length = 180 mm

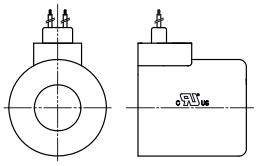

12 SOLENOID CONNECTION

PIN	SIGNAL	TECHNICAL SPECIFICATION	Connector code 666
1	**COIL**	Power supply	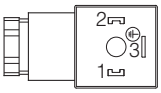
2	**COIL**	Power supply	
3	**GND**	Ground	

13 FASTENING BOLTS AND SEALS FOR RZME

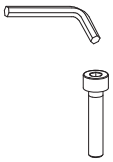	**Fastening bolts:** 4 socket head screws M5x50 class 12.9 Tightening torque = 8 Nm
	Seals: 2 OR 108 Diameter of ports P, T: Ø 5 mm

14 INSTALLATION DIMENSIONS FOR RZME [mm]

ISO 4401: 2005
Mounting surface: 4401-03-02-0-05 (see table P005)
(without ports A and B)

Mass [kg]	
RZME	1,5
RZME with E-MI-AS-IR	2,0

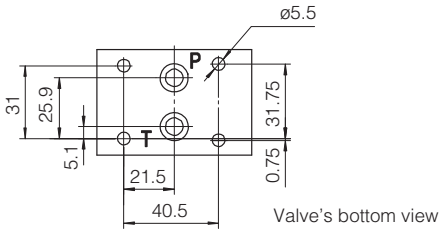

RZME-A

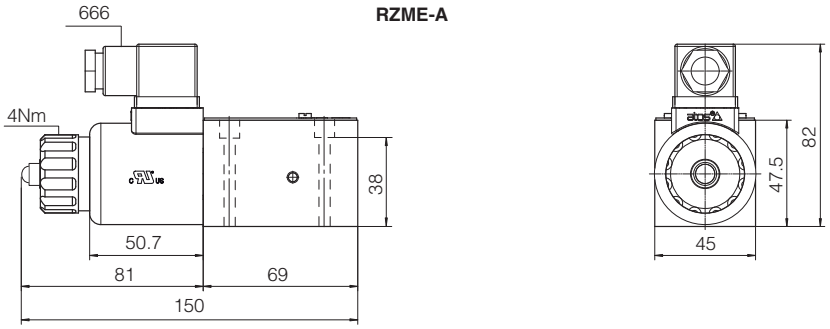

RZME-A
(with digital driver E-MI-AS-IR)

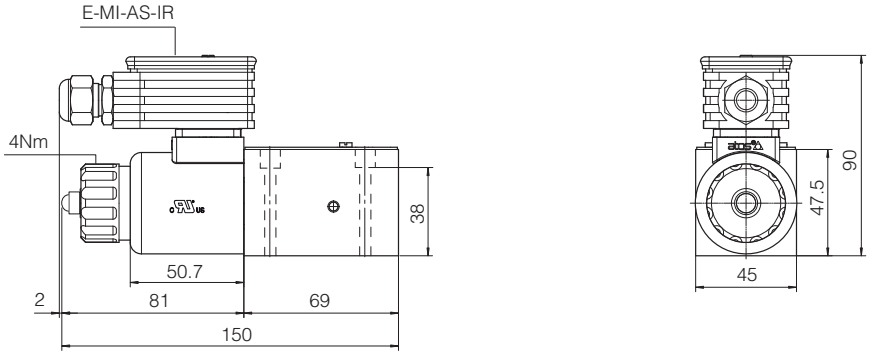

15 INSTALLATION DIMENSIONS FOR CART RZME [mm]

Cavity dimensions for **CART RZME-A**

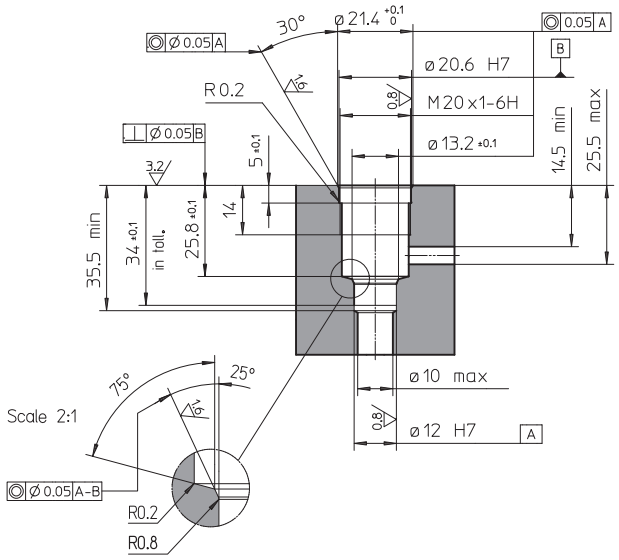

CART RZME-A

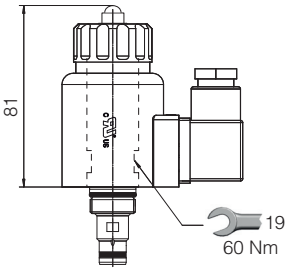

CART RZME-A
(with E-MI-AS-IR digital driver)

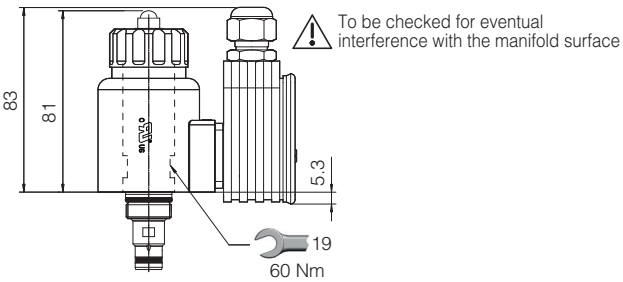

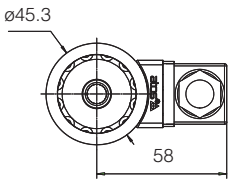

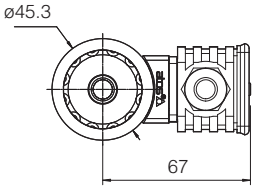

Mass [kg]	
CART RZME	0,6
CART RZME with E-MI-AS-IR	1,1

16 RELATED DOCUMENTATION

FS001	Basics for digital electrohydraulics	**GS050**	E-BM-AES digital driver
FS900	Operating and maintenance information for proportional valves	**GS500**	Programming tools
G010	E-MI-AC analog driver	**K800**	Electric and electronic connectors
G020	E-MI-AS-IR digital driver	**P005**	Mounting surfaces for electrohydraulic valves
G030	E-BM-AS digital driver		

Digital proportional relief valves

piloted, without transducer, subplate or modular mounting

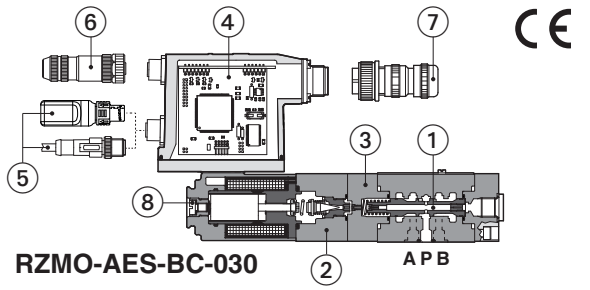

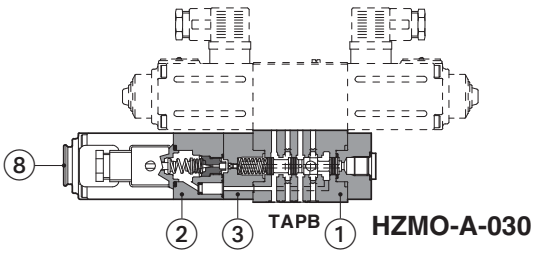

① Main spool
② Proportional pilot relief valve
③ Pilot flow compensator
④ On-board digital driver
⑤ Bluetooth/USB connection
⑥ Fieldbus connector
⑦ Main connector
⑧ Screw for air blending

RZMO-A , RZMO-AEB, RZMO-AES
HZMO-A

Spool type piloted digital proportional relief valves for pressure open loop controls, available in subplate or modular mounting.

A to be coupled with off-board driver.

AEB basic execution, with on-board digital driver, with analog reference signal or IO-Link interface for digital reference signals, valve settings, and real-time diagnostics.

AES full execution, with on-board digital driver which includes also fieldbus interfaces for digital reference signals, valve settings, and real-time diagnostics.

For **AEB** and **AES**, Bluetooth/USB connection is always present for valve settings via mobile App and Atos PC software.

Size: **06** - ISO 4401
Max flow: **40 l/min**
Max pressure: **350 bar**

1 MODEL CODE

RZMO	-	AEB	-	NP	-	030	/	210	/	*	/	*	/	*	*	/	*

RZMO
Proportional pressure relief valve, piloted
RZMO = subplate
HZMO = modular

A = off-board driver, see section 3
AEB = basic on-board digital driver
AES = full on-board digital driver

IO-Link interface, only for AEB, see section 7 :
NP = Not present **IL** = IO-Link

Fieldbus interfaces, only for AES, see section 8 :
BC = CANopen **EH** = EtherCAT
BP = PROFIBUS DP

Configuration:
030 = regulation on port P, discharge in T (pilot operated version)

Max regulated pressure:
50 = 50 bar **210** = 210 bar **350**= 350 bar
100 = 100 bar **315** = 315 bar

Electronic options, only for **AEB-NP** and **AES (1)**:
I = current reference input 4÷20 mA
Q = enable signal
Z = double power supply, enable, fault and monitor signals -12 pin connector

Bluetooth option, only for **AEB** and **AES (1)**, see section 6 :
T = Bluetooth adapter supplied with the valve

Coil voltage, only for **A** - see section 16 :
- = standard coil for 24VDC Atos drivers
6 = optional coil for 12VDC Atos drivers
18 = optional coil for low current drivers

Series number

Seals material, see section 12 :
- = NBR
PE = FKM
BT = NBR low temp.

(1) Possible combined options: IQ, IZ (/T Bluetooth adapter option can be combined with all other options)

2 HYDRAULIC SYMBOLS

RZMO-A

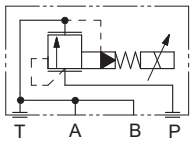

RZMO-AEB RZMO-AES

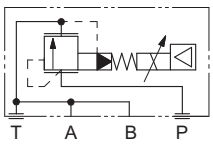

HZMO-A

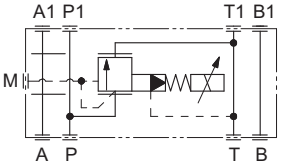

3 OFF-BOARD ELECTRONIC DRIVERS - only for **A**

Drivers model	E-MI-AC-01F		E-MI-AS-IR		E-BM-AS-PS		E-BM-AES
Type	Analog		Digital				
Voltage supply (VDC)	12	24	12	24	12	24	24
Valve coil option	/6	std	/6	std	/6	std	std
Format	plug-in to solenoid				DIN-rail panel		
Tech table	G010		G020		G030		GS050

4 GENERAL NOTES

Atos digital proportionals valves are CE marked according to the applicable directives (e.g. Immunity and Emission EMC Directive).
Installation, wirings and start-up procedures must be performed according to the general prescriptions shown in tech table **FS900** and in the user manuals included in the E-SW-SETUP programming software.

5 VALVE SETTINGS AND PROGRAMMING TOOLS - see tech. table **GS500**

5.1 Atos CONNECT mobile App

Free downloadable App for smartphones and tablets which allows quick access to valve main functional parameters and basic diagnostic information via Bluetooth, thus avoiding physical cable connection and significantly reducing commissioning time.
Atos CONNECT supports Atos digital valve drivers equipped with E-A-BTH adapter or with built-in Bluetooth. It does not support valves with p/Q control or axis controls.

Download on the App Store

GET IT ON Google Play

5.2 E-SW-SETUP PC software

Free downloadable software for PC allows to set all valve functional parameters and to access complete diagnostic information of digital valve drivers via Bluetooth/USB service port.
Atos E-SW-SETUP PC software supports all Atos digital valve drivers and it is available at www.atos.com in MyAtos area.

WARNING: drivers USB port is not isolated! For E-C-SB-USB/M12 cable, the use of E-A-SB-USB/OPT isolator adapter is highly recommended for PC protection

Bluetooth or USB connection

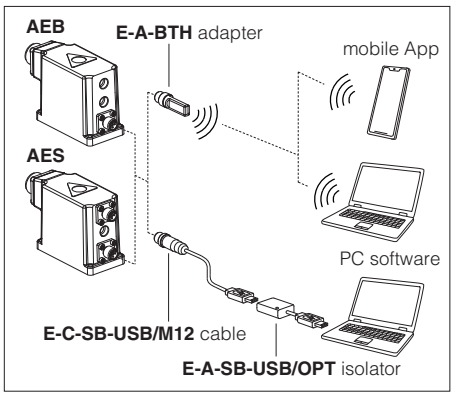

6 BLUETOOTH OPTION - see tech. table **GS500**

T option adds Bluetooth® connectivity to Atos valve drivers thanks to E-A-BTH adapter, which can be left permanently installed on-board, to allow the Bluetooth connection with the valve drivers at any time. E-A-BTH adapter can also be purchased separately and used to connect with any supported Atos digital product.
Bluetooth connection to the valve can be protected against unauthorised access by setting a personal password. The adapter leds visually indicates the status of valve driver and Bluetooth connection.

WARNING: for the list of countries where the Bluetooth adapter has been approved, see tech. table **GS500**
T option is not available for the Indian market, so the Bluetooth adapter must be ordered separately.

7 IO-LINK - only for **AEB**, see tech. table **GS520**

IO-Link allows low cost digital communication between the valve and machine central unit. The valve is directly connected to a port of an IO-Link master (point-to-point connection) via low-cost unshielded cables for digital reference, diagnostic and settings. The IO-Link master works as a hub exchanging this information with the machine central unit via fieldbus.

8 FIELDBUS - only for **AES**, see tech. table **GS510**

Fieldbus allows valve direct communication with machine control unit for digital reference, valve diagnostics and settings. These execution allow to operate the valves through fieldbus or analog signals available on the main connector.

9 GENERAL CHARACTERISTICS

Assembly position	Any position
Subplate surface finishing to ISO 4401	Acceptable roughness index: Ra ≤ 0,8, recommended Ra 0,4 – Flatness ratio 0,01/100
MTTFd valves according to EN ISO 13849	75 years, for further details see technical table P007
Ambient temperature range	**A:** **Standard** = -20°C ÷ +70°C **/PE** option = -20°C ÷ +70°C **/BT** option = -40°C ÷ +60°C **AEB, AES:** **Standard** = -20°C ÷ +60°C **/PE** option = -20°C ÷ +60°C **/BT** option = -40°C ÷ +60°C
Storage temperature range	**A:** **Standard** = -20°C ÷ +80°C **/PE** option = -20°C ÷ +80°C **/BT** option = -40°C ÷ +70°C **AEB, AES:** **Standard** = -20°C ÷ +70°C **/PE** option = -20°C ÷ +70°C **/BT** option = -40°C ÷ +70°C
Surface protection	Zinc coating with black passivation, galvanic treatment (driver housing for AEB and AES)
Corrosion resistance	Salt spray test (EN ISO 9227) > 200 h
Vibration resistance	See technical table G004 (for AEB and AES)
Compliance	CE according to EMC directive 2014/30/EU (Immunity: EN 61000-6-2; Emission: EN 61000-6-3) RoHS Directive 2011/65/EU as last update by 2015/863/EU REACH Regulation (EC) n°1907/2006

10 HYDRAULIC CHARACTERISTICS - based on mineral oil ISO VG 46 at 50 °C

Valve model		RZMO-*-030, HZMO-A-30
Max regulated pressure	[bar]	50; 100; 210; 315; 350
Max pressure at port P	[bar]	350
Max pressure at port T	[bar]	210
Min regulated pressure	[bar]	see min. pressure / flow diagram at section 13
Min ÷ Max flow	[l/min]	2,5 ÷ 40
Response time 0-100% step signal (depending on installation) **(1)**	[ms]	≤ 60
Hysteresis		≤ 2 [% of max pressure]
Linearity		≤ 3 [% of max pressure]
Repeatability		≤ 2 [% of max pressure]

Note: above performance data refer to valves coupled with Atos electronic drivers, see section 3

(1) Average response time value; the pressure variation in consequence of a modification of the reference input signal to the valve is affected by the stiffness of the hydraulic circuit: greater is the stiffness of the circuit, faster is the dynamic response

11 ELECTRICAL CHARACTERISTICS

Power supplies	Nominal : +24 VDC Rectified and filtered : VRMS = 20 ÷ 32 VMAX (ripple max 10 % VPP)				
Max power consumption	**A** = 30 W **AEB**, **AES** = 50 W				
Coil voltage code	standard		option /6		option /18
Max. solenoid current	2,6 A		3,25 A		1,5 A
Coil resistance R at 20°C	3 ÷ 3,3 Ω		2 ÷ 2,2 Ω		13 ÷ 13,4 Ω
Analog input signals	Voltage: range ±10 VDC (24 VMAX tolerant) Input impedance: Ri > 50 kΩ Current: range ±20 mA Input impedance: Ri = 500 Ω				
Monitor output	Output range: voltage ±5 VDC @ max 5 mA				
Enable input	Range: 0 ÷ 9 VDC (OFF state), 15 ÷ 24 VDC (ON state), 9 ÷ 15 VDC (not accepted); Input impedance: Ri > 87 kΩ				
Fault output	Output range : 0 ÷ 24 VDC (ON state ≅ VL+ [logic power supply] ; OFF state ≅ 0 V) @ max 50 mA; external negative voltage not allowed (e.g. due to inductive loads)				
Alarms	Solenoid not connected/short circuit, cable break with current reference signal, over/under temperature, current control monitoring, power supplies level				
Insulation class	H (180°) Due to the occurring surface temperatures of the solenoid coils, the European standards ISO 13732-1 and EN982 must be taken into account				
Protection degree to DIN EN60529	**A** = IP65; **AEB**, **AES** = IP66 / IP67 with mating connectors				
Duty factor	Continuous rating (ED=100%)				
Tropicalization	Tropical coating on electronics PCB				
Additional characteristics	Short circuit protection of solenoid's current supply; current control by P.I.D. with rapid solenoid switching; protection against reverse polarity of power supply				
Communication interface	USB Atos ASCII coding	IO-Link Interface and System Specification 1.1.3	CANopen EN50325-4 + DS408	PROFIBUS DP EN50170-2/IEC61158	EtherCAT IEC 61158
Communication physical layer	not insulated USB 2.0+USB OTG	SDCI class port B	optical insulated CAN ISO11898	optical insulated RS485	Fast Ethernet, insulated 100 Base TX
Recommended wiring cable	LiYCY shielded cables, see section 21				

Note: a maximum time of 500 ms (depending on communication type) has to be considered between the driver energizing with the 24 VDC power supply and when the valve is ready to operate. During this time the current to the valve coils is switched to zero.

12 SEALS AND HYDRAULIC FLUIDS - for other fluids not included in below table, consult our technical office

Seals, recommended fluid temperature		NBR seals (standard) = -20°C ÷ +60°C (+80°C for **A**), with HFC hydraulic fluids = -20°C ÷ +50°C FKM seals (/PE option) = -20°C ÷ +80°C NBR low temp. seals (/BT option) = -40°C ÷ +60°C, with HFC hydraulic fluids = -20°C ÷ +50°C		
Recommended viscosity		20 ÷ 100 mm²/s - max allowed range 15 ÷ 380 mm²/s		
Max fluid contamination level	normal operation	ISO4406 class 18/16/13 NAS1638 class 7		see also filter section at www.atos.com or KTF catalog
	longer life	ISO4406 class 16/14/11 NAS1638 class 5		
Hydraulic fluid		**Suitable seals type**	**Classification**	**Ref. Standard**
Mineral oils		NBR, FKM, NBR low temp.	HL, HLP, HLPD, HVLP, HVLPD	DIN 51524
Flame resistant without water		FKM	HFDU, HFDR	ISO 12922
Flame resistant with water		NBR, NBR low temp.	HFC	

13 DIAGRAMS (based on mineral oil ISO VG 46 at 50 °C)

1 Regulation diagrams
with flow rate Q = 10 l/min

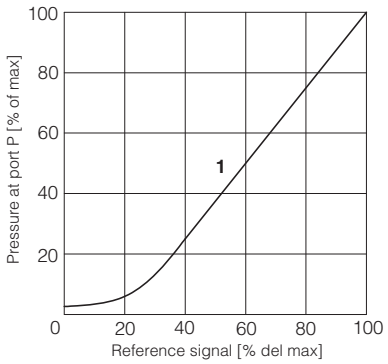

2 Pressure/flow diagrams
with reference signal set at Q = 10 l/min

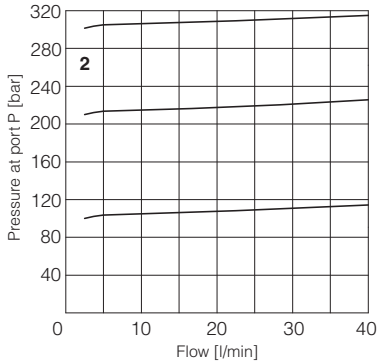

3-4 Min. pressure/flow diagrams
with zero reference signal

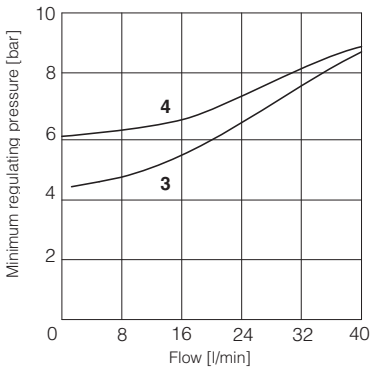

3 = All the models (except /350)
4 = All the models (only /350)

Note: the presence of counter pressure at port T can affect the pressure regulation and the minimum pressure

14 ELECTRONIC OPTIONS - only for **AEB-NP** and **AES**

I = This option provides 4 ÷ 20 mA current reference, instead of the standard 0 ÷ 10 VDC.
Input signal can be reconfigured via software selecting between voltage and current, within a maximum range of ±10 VDC or ±20 mA.
It is normally used in case of long distance between the machine control unit and the valve or where the reference signal can be affected by electrical noise; the valve functioning is disabled in case of reference signal cable breakage.

Q = This option permits to inhibit the valve function without removing the power supply to the driver. Upon disable command the current to the solenoid is zeroed and the valve's spool moves to rest position.
The option /Q is suggested for all cases where the valve has to be frequently inhibited during the machine cycle – see 18.5 for signal specifications.

Z = This option provides, on the 12 pin main connector, the following additional features:
Fault output signal - see 18.6
Enable input signal - see above option /Q
Power supply for driver's logics and communication - see 18.2

15 POSSIBLE COMBINED OPTIONS

Electronic options: /IQ, /IZ

Note: **/T** Bluetooth adapter option can be combined with all other options

16 COIL VOLTAGE OPTIONS - only for **A**

6 = Optional coil to be used with Atos drivers with power supply 12 VDC.

18 = Optional coil to be used with electronic drivers not supplied by Atos.

17 AIR BLEEDING

At the first valve commissioning the air eventually trapped inside the solenoid must be bled-off through the screw ① located at the rear side of the solenoid housing.
The presence of air may cause pressure instability and vibrations.

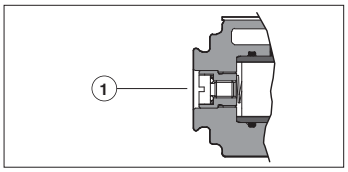

18 POWER SUPPLY AND SIGNALS SPECIFICATIONS - only for **AEB-NP** and **AES**

Generic electrical output signals of the valve (e.g. fault or monitor signals) must not be directly used to activate safety functions, like to switch-ON/OFF the machine's safety components, as prescribed by the European standards (Safety requirements of fluid technology systems and components-hydraulics, ISO 4413).

For **AEB-IL** signals see section 19

18.1 Power supply (V+ and V0)

The power supply must be appropriately stabilized or rectified and filtered: apply at least a 10000 μF/40 V capacitance to single phase rectifiers or a 4700 μF/40 V capacitance to three phase rectifiers. In case of separate power supply see 18.2.

⚠ A safety fuse is required in series to each power supply: 2,5 A time lag fuse.

18.2 Power supply for driver's logic and communication (VL+ and VL0) - only for **/Z** option

The power supply for driver's logic and communication must be appropriately stabilized or rectified and filtered: apply at least a 10000 μF/40 V capacitance to single phase rectifiers or a 4700 μF/40 V capacitance to three phase rectifiers.
The separate power supply for driver's logic on pin 9 and 10, allow to remove solenoid power supply from pin 1 and 2 maintaining active the diagnostics, USB and fieldbus communications.

⚠ A safety fuse is required in series to each driver's logic and communication power supply: 500 mA fast fuse.

18.3 Reference input signal (INPUT+)

The driver controls in closed loop the current to the valve proportionally to the external reference input signal.
Reference input signal is factory preset according to selected valve code, defaults are 0 ÷ 10 VDC for standard and 4 ÷ 20 mA for /I option.
Input signal can be reconfigured via software selecting between voltage and current, within a maximum range of ±10 VDC or ± 20 mA.
Drivers with fieldbus interface (BC, BP, EH) can be software set to receive reference signal directly from the machine control unit (fieldbus reference). Analog reference input signal can be used as on-off commands with input range 0 ÷ 24VDC.

18.4 Monitor output signal (MONITOR)

The driver generates an analog output signal (MONITOR) proportional to the actual coil current of the valve; the monitor output signal can be software set to show other signals available in the driver (e.g. analog reference, fieldbus reference).
Monitor output signal is factory preset according to selected valve code, default settings is 0 ÷ 5 VDC (1V = 1A).
Output signal can be reconfigured via software, within a maximum range of ±5 VDC.

18.5 Enable input signal (ENABLE) - not for standard

To enable the driver, supply a 24 VDC on pin 3 (pin C): Enable input signal allows to enable/disable the current supply to the solenoid, without removing the electrical power supply to the driver; it is used to active the communication and the other driver functions when the valve must be disabled for safety reasons. This condition **does not comply** with norms IEC 61508 and ISO 13849.
Enable input signal can be used as generic digital input by software selection.

18.6 Fault output signal (FAULT) - only for **/Z** option

Fault output signal indicates fault conditions of the driver (solenoid short circuits/not connected, reference signal broken for 4 ÷ 20 mA input, etc.).
Fault presence corresponds to 0 VDC, normal working corresponds to 24 VDC.
Fault status is not affected by the Enable input signal.

19 IO-LINK SIGNALS SPECIFICATIONS - only for **AEB-IL**

19.1 Power supply for IO-Link communication (L+ and L-)

The IO-Link master provides dedicated 24 VDC power supply for IO-Link communication.
Maximum power consumption: 2 W
Internal electrical isolation of power L+, L- from P24, N24

19.2 Power supply for driver's logic and valve regulation (P24 and N24)

The IO-Link master provides dedicated 24 VDC power supply for valve regulation, logics and diagnostics.
Maximum power consumption: 50 W
Internal electrical isolation of power P24, N24 from L+, L-

19.3 IO-Link data line (C/Q)

C/Q signal is used to establish communication between IO-Link master and valve.

20 ELECTRONIC CONNECTIONS

20.1 Main connector signals - 7 pin (A1) Standard and /Q option - for AEB-NP and AES

PIN	Standard	/Q	TECHNICAL SPECIFICATIONS	NOTES
A	**V+**		Power supply 24 VDC	Input - power supply
B	**V0**		Power supply 0 VDC	Gnd - power supply
C	**AGND**		Analog ground	Gnd - analog signal
		ENABLE	Enable (24 VDC) or disable (0 VDC) the driver, referred to V0	Input - on/off signal
D	**INPUT+**		Reference input signal: ±10 VDC / ±20 mA maximum range Defaults are 0 ÷ 10 VDC for standard and 4 ÷ 20 mA for /I option	Input - analog signal **Software selectable**
E	**INPUT-**		Negative reference input signal for INPUT+	Input - analog signal
F	**MONITOR** referred to: AGND | V0		Monitor output signal: ±5 VDC maximum range Default is 0 ÷ 5 VDC (1V = 1A)	Output - analog signal **Software selectable**
G	**EARTH**		Internally connected to driver housing	

20.2 Main connector signals - 12 pin (A2) /Z option - for AEB-NP and AES

PIN	/Z	TECHNICAL SPECIFICATIONS	NOTES
1	**V+**	Power supply 24 VDC	Input - power supply
2	**V0**	Power supply 0 VDC	Gnd - power supply
3	**ENABLE**	Enable (24 VDC) or disable (0 VDC) the driver, referred to VL0	Input - on/off signal
4	**INPUT+**	Reference input signal: ±10 VDC / ±20 mA maximum range Defaults are 0 ÷ 10 VDC for standard and 4 ÷ 20 mA for /I option	Input - analog signal **Software selectable**
5	**INPUT-**	Negative reference input signal for INPUT+	Input - analog signal
6	**MONITOR**	Monitor output signal: ±5 VDC maximum range, referred to VL0 Default is 0 ÷ 5 VDC (1V = 1A)	Output - analog signal **Software selectable**
7	**NC**	Do not connect	
8	**NC**	Do not connect	
9	**VL+**	Power supply 24 VDC for driver's logic and communication	Input - power supply
10	**VL0**	Power supply 0 VDC for driver's logic and communication	Gnd - power supply
11	**FAULT**	Fault (0 VDC) or normal working (24 VDC), referred to VL0	Output - on/off signal
PE	**EARTH**	Internally connected to driver housing	

Note: do not disconnect VL0 before VL+ when the driver is connected to PC USB port

20.3 IO-Link connector signals - M12 - 5 pin - Coding A, port class B (A) only for AEB-IL

PIN	SIGNAL	TECHNICAL SPECIFICATIONS	NOTES
1	**L+**	Power supply 24 VDC for IO-Link communication	Input - power supply
2	**P24**	Power supply 24 VDC for valve regulation, logics and diagnostics	Input - power supply
3	**L-**	Power supply 0 VDC for IO-Link communication	Gnd - power supply
4	**C/Q**	IO-Link data line	Input / Output - signal
5	**N24**	Power supply 0 VDC for valve regulation, logics and diagnostics	Gnd - power supply

Note: L+, L- and P24, N24 are electrically isolated

20.4 Communication connectors - for AEB (B) and AES (B) - (C)

(B) **USB connector - M12 - 5 pin** always present		
PIN	**SIGNAL**	**TECHNICAL SPECIFICATION (1)**
1	**+5V_USB**	Power supply
2	**ID**	Identification
3	**GND_USB**	Signal zero data line
4	**D-**	Data line -
5	**D+**	Data line +

(C1) **BC fieldbus execution, connector - M12 - 5 pin (2)**		
PIN	**SIGNAL**	**TECHNICAL SPECIFICATION (1)**
1	**CAN_SHLD**	Shield
2	**NC**	do not connect
3	**CAN_GND**	Signal zero data line
4	**CAN_H**	Bus line (high)
5	**CAN_L**	Bus line (low)

(C2) **BP fieldbus execution, connector - M12 - 5 pin (2)**		
PIN	**SIGNAL**	**TECHNICAL SPECIFICATION (1)**
1	**+5V**	Termination supply signal
2	**LINE-A**	Bus line (high)
3	**DGND**	Data line and termination signal zero
4	**LINE-B**	Bus line (low)
5	**SHIELD**	

(C3) (C4) **EH fieldbus execution, connector - M12 - 4 pin (2)**		
PIN	**SIGNAL**	**TECHNICAL SPECIFICATION (1)**
1	**TX+**	Transmitter
2	**RX+**	Receiver
3	**TX-**	Transmitter
4	**RX-**	Receiver
Housing	**SHIELD**	

(1) Shield connection on connector's housing is recommended

(2) Only for **AES** execution

20.5 Solenoid connection - only for A

PIN	SIGNAL	TECHNICAL SPECIFICATION	Connector code 666
1	**COIL**	Power supply	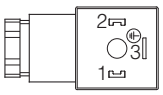
2	**COIL**	Power supply	
3	**GND**	Ground	

20.6 AEB-NP connections layout

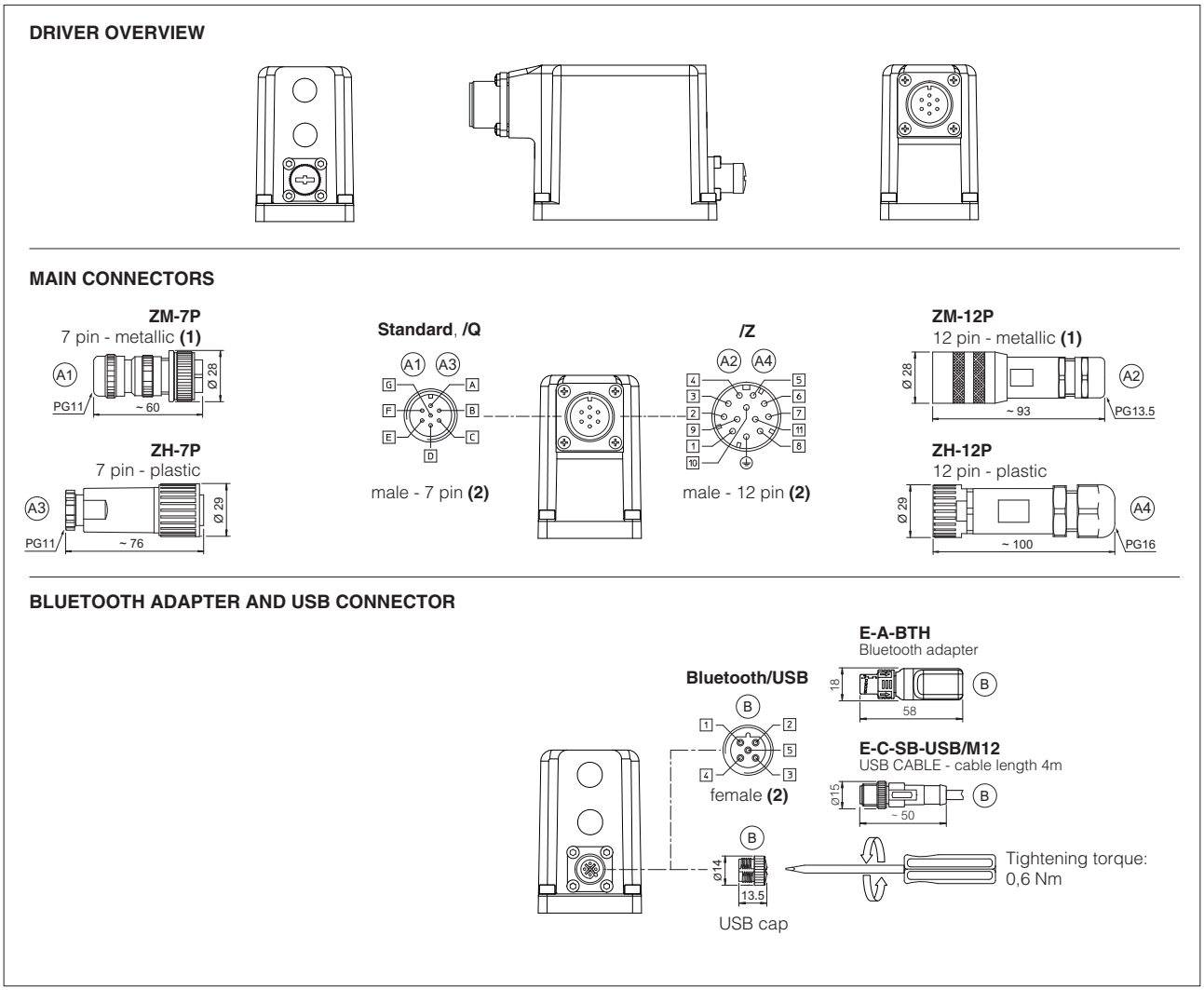

(1) Use of metallic connectors is strongly recommended in order to fulfill EMC requirements **(2)** Pin layout always referred to driver's view

20.7 AEB-IL connections layout

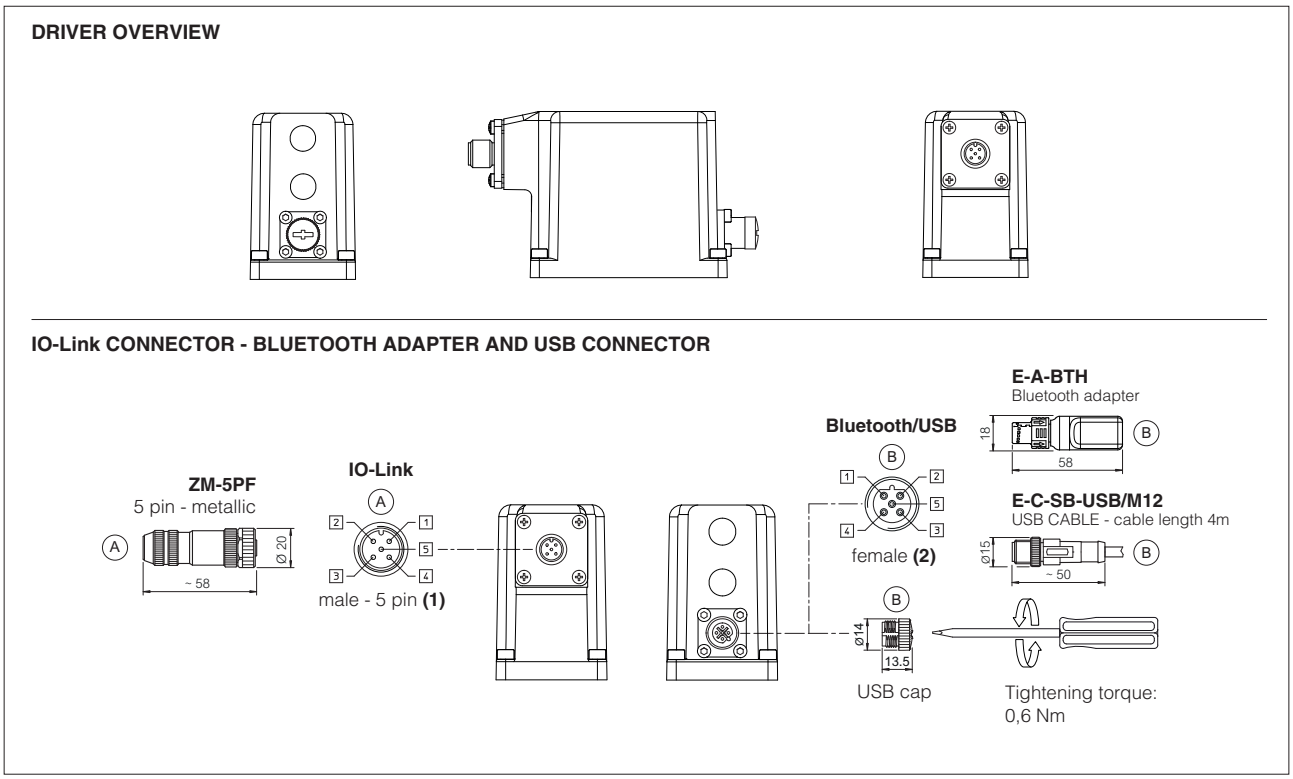

(1) Use of metallic connectors is strongly recommended in order to fulfill EMC requirements **(2)** Pin layout always referred to driver's view

20.8 AES connections layout

DRIVER OVERVIEW

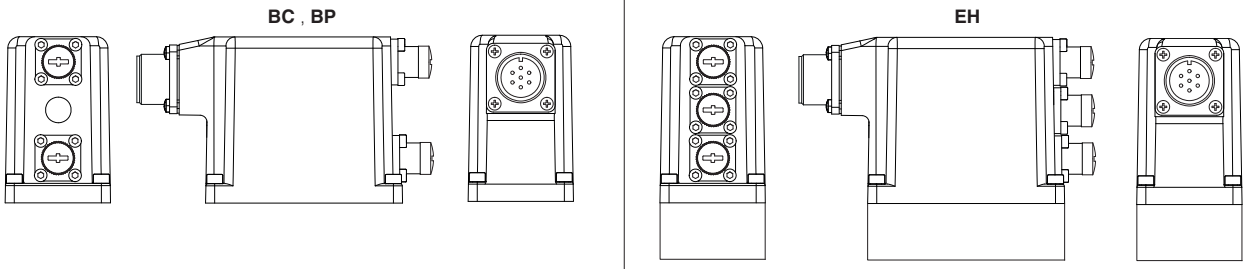

MAIN CONNECTORS

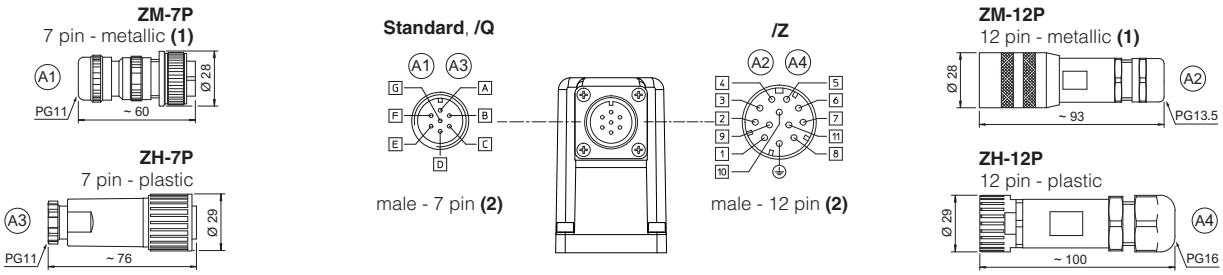

FIELDBUS CONNECTORS

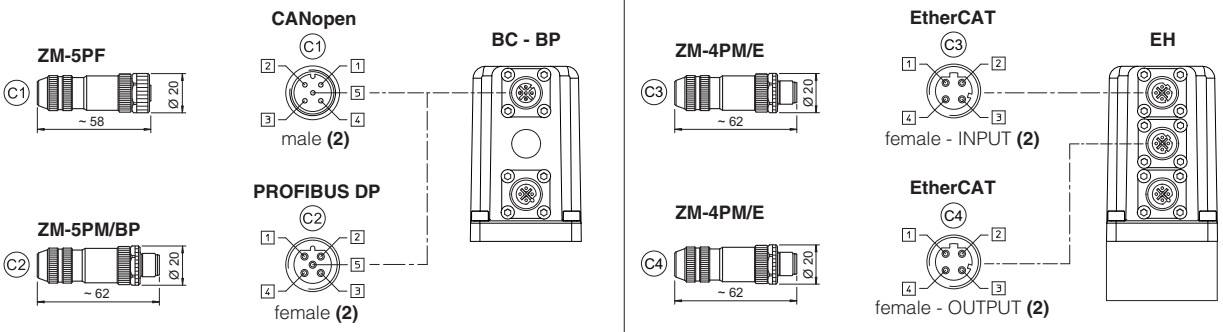

BLUETOOTH ADAPTER AND USB CONNECTOR

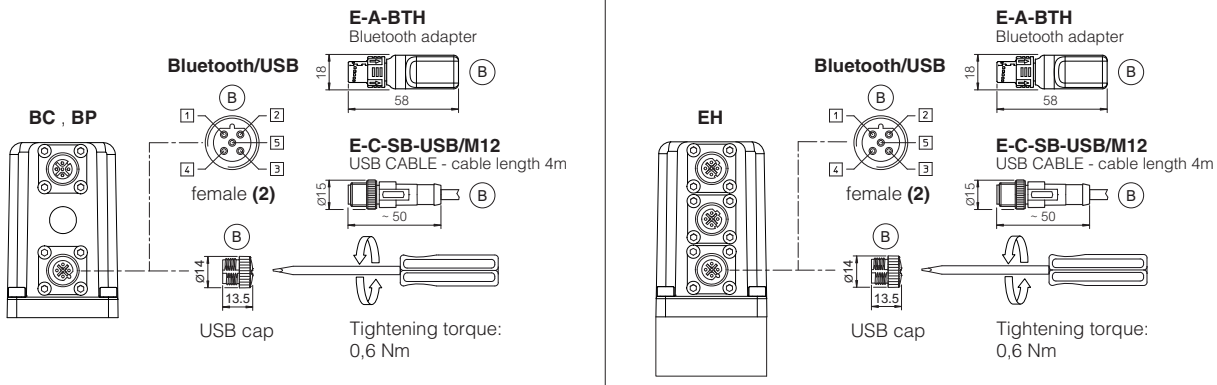

(1) Use of metallic connectors is strongly recommended in order to fulfill EMC requirements **(2)** Pin layout always referred to driver's view

21 CONNECTORS CHARACTERISTICS - to be ordered separately

21.1 Main connectors - 7 pin - for AEB-NP and AES

CONNECTOR TYPE	POWER SUPPLY AND SIGNALS	POWER SUPPLY AND SIGNALS
CODE	A1 ZM-7P	A3 ZH-7P
Type	7pin female straight circular	7pin female straight circular
Standard	According to MIL-C-5015	According to MIL-C-5015
Material	Metallic	Plastic reinforced with fiber glass
Cable gland	PG11	PG11
Recommended cable	LiYCY 7 x 0,75 mm² max 20 m (logic and power supply) or LiYCY 7 x 1 mm² max 40 m (logic and power supply)	LiYCY 7 x 0,75 mm² max 20 m (logic and power supply) or LiYCY 7 x 1 mm² max 40 m (logic and power supply)
Conductor size	up to 1 mm² - available for 7 wires	up to 1 mm² - available for 7 wires
Connection type	to solder	to solder
Protection (EN 60529)	IP 67	IP 67

21.2 Main connectors - 12 pin - for AEB-NP and AES

CONNECTOR TYPE	POWER SUPPLY AND SIGNALS	POWER SUPPLY AND SIGNALS
CODE	A2 ZM-12P	A4 ZH-12P
Type	12pin female straight circular	12pin female straight circular
Standard	DIN 43651	DIN 43651
Material	Metallic	Plastic reinforced with fiber glass
Cable gland	PG13,5	PG16
Recommended cable	LiYCY 12 x 0,75 mm² max 20 m (logic and power supply)	LiYCY 10 x 0,14mm² max 40 m (logic) LiYY 3 x 1mm² max 40 m (power supply)
Conductor size	0,5 mm² to 1,5 mm² - available for 12 wires	0,14 mm² to 0,5 mm² - available for 9 wires 0,5 mm² to 1,5 mm² - available for 3 wires
Connection type	to crimp	to crimp
Protection (EN 60529)	IP 67	IP 67

21.3 IO-Link connector - only for AEB-IL

CONNECTOR TYPE	IL IO-Link
CODE	A ZM-5PF
Type	5pin female straight circular
Standard	M12 coding A – IEC 61076-2-101
Material	Metallic
Cable gland	Pressure nut - cable diameter 6÷8 mm
Recommended cable	5 x 0,75 mm² max 20 m
Connection type	screw terminal
Protection (EN 60529)	IP 67

21.4 Fieldbus communication connectors - only for AES

CONNECTOR TYPE	BC CANopen (1)		BP PROFIBUS DP (1)		EH EtherCAT (2)
CODE	C1 ZM-5PF	C2 ZM-5PM	C1 ZM-5PF/BP	C2 ZM-5PM/BP	C1 C2 ZM-4PM/E
Type	5 pin female straight circular	5 pin male straight circular	5 pin female straight circular	5 pin male straight circular	4 pin male straight circular
Standard	M12 coding A – IEC 61076-2-101		M12 coding B – IEC 61076-2-101		M12 coding D – IEC 61076-2-101
Material	Metallic		Metallic		Metallic
Cable gland	Pressure nut - cable diameter 6÷8 mm		Pressure nut - cable diameter 6÷8 mm		Pressure nut - cable diameter 4÷8 mm
Cable	CANbus Standard (DR 303-1)		PROFIBUS DP Standard		Ethernet standard CAT-5
Connection type	screw terminal		screw terminal		terminal block
Protection (EN 60529)	IP67		IP 67		IP 67

(1) E-TRM-** terminators can be ordered separately - see tech table **GS500**

(2) Internally terminated

22 FASTENING BOLTS AND SEALS

	RZMO	HZMO
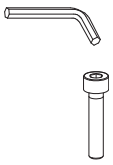	**Fastening bolts:** 4 socket head screws M5x50 class 12.9 Tightening torque = 8 Nm	**Fastening bolts:** Not available
	Seals: 4 OR 108 Diameter of ports P, T: Ø 7,5 mm Ports A, B connected to port T	**Seals:** 4 OR 108 Diameter of ports P, T, A, B: Ø 6,5 mm

RZMO

ISO 4401: 2005
Mounting surface: 4401-03-02-0-05
(see table P005)

Mass [kg]		
A	AEB, AES	AES-EH
2,8	3,3	3,4

RZMO-A

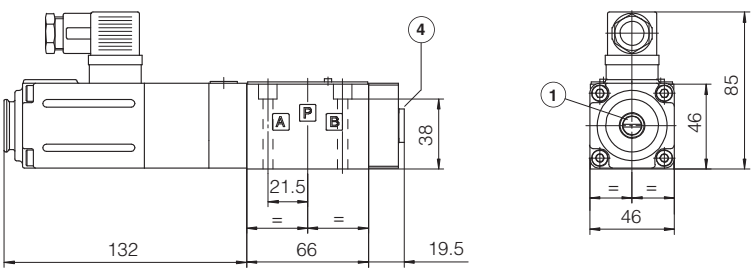

RZMO-AEB-NP
RZMO-AEB-IL

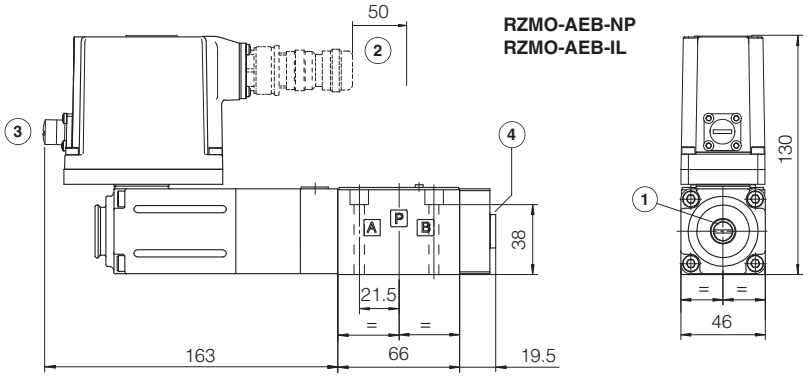

RZMO-AES-BP
RZMO-AES-BC

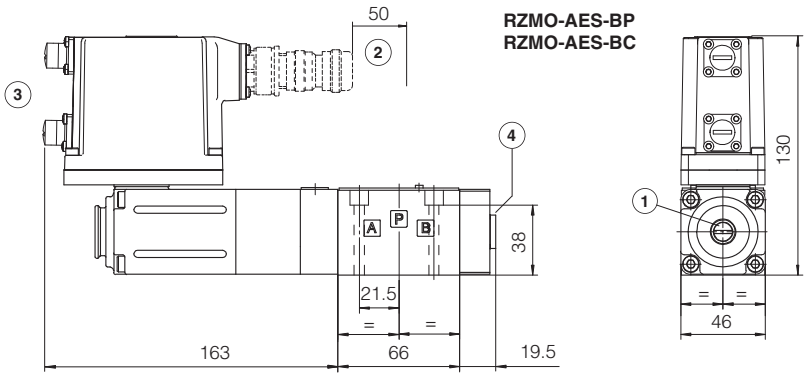

RZMO-AES-EH*

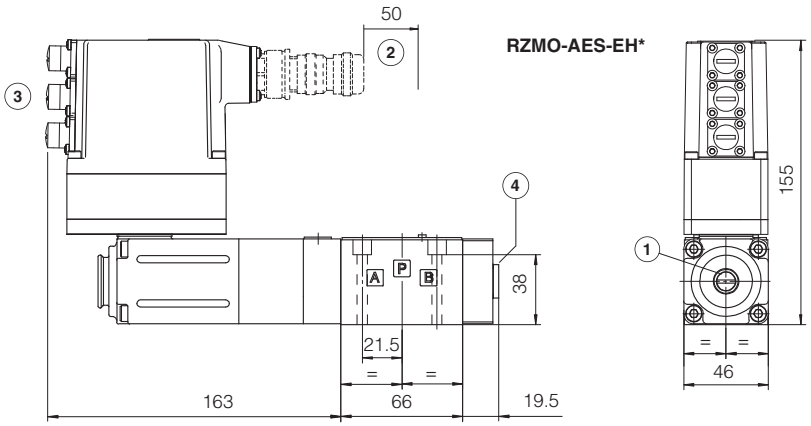

HZMO

ISO 4401: 2005
Mounting surface: 4401-03-02-0-05
(see table P005)

Mass [kg]
A
2,8

HZMO-A

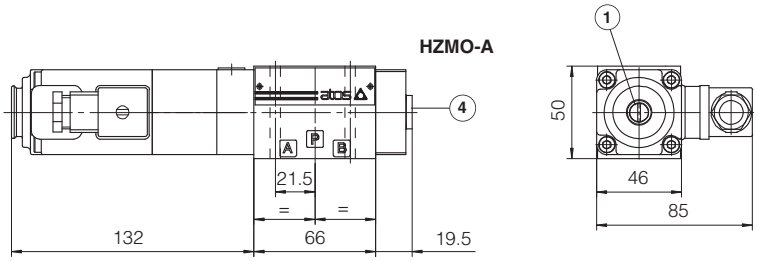

(1) = Air bleeding, see section 17
(2) = Space required for connection cable and for connector removal
(3) = The dimensions of connectors and Bluetooth adapter must be considered, see section 20.6, 20.7 and 20.8
(4) = Pressure gauge port = G1/4”

24 RELATED DOCUMENTATION

FS001	Basics for digital electrohydraulics	**K800**	Electric and electronic connectors
FS900	Operating and maintenance information for proportional valves	**P005**	Mounting surfaces for electrohydraulic valves
G010	E-MI-AC analog driver	**QB200**	Quickstart for AEB valves commissioning
G020	E-MI-AS-IR digital driver	**QF200**	Quickstart for AES valves commissioning
G030	E-BM-AS digital driver	**E-MAN-MI-AS**	E-MI-AS-IR user manual (off-board)
GS050	E-BM-AES digital driver	**E-MAN-BM-AS**	E-BM-AS user manual (off-board)
GS500	Programming tools	**E-MAN-BM-AES**	E-BM-AES user manual (off-board)
GS510	Fieldbus	**E-MAN-RI-AEB**	AEB user manual
GS520	IO-Link interface	**E-MAN-RI-AES**	AES user manual

Digital proportional relief valves

piloted, without transducer

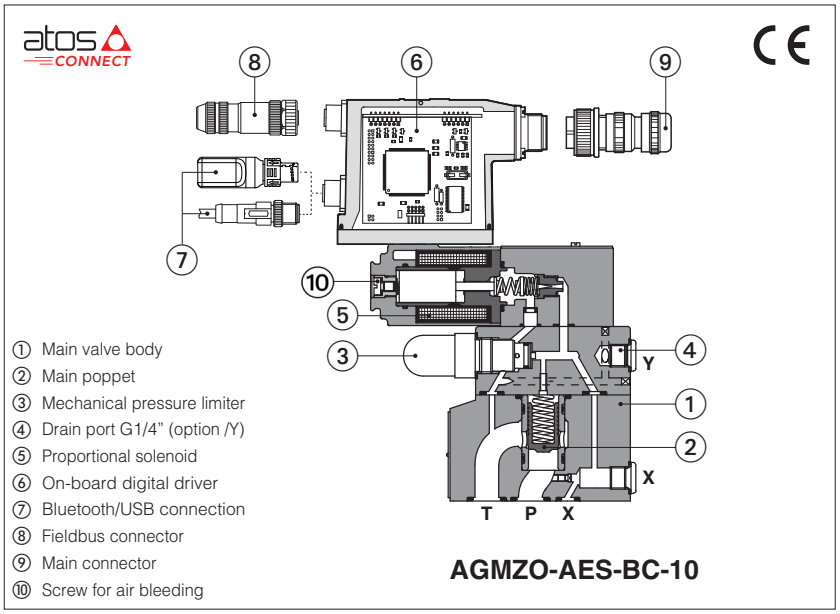

AGMZO-AES-BC-10

AGMZO-A,
AGMZO-AEB, AGMZO-AES

Poppet type, piloted, digital proportional relief valves for pressure open loop controls.

A to be coupled with off-board driver.

AEB basic execution, with on-board digital driver, with analog reference signal or IO-Link interface for digital reference signals, valve settings, and real-time diagnostics.

AES full execution, with on-board digital driver which includes also fieldbus interfaces for digital reference signals, valve settings, and real-time diagnostics.

For **AEB** and **AES**, Bluetooth/USB connection is always present for valve settings via mobile App and Atos PC software.

Size: **10**, **20**, **32** - ISO 6264
Max flow: **200**, **400**, **600 l/min**
Max pressure: **350 bar**

1 MODEL CODE

AGMZO	-	AES	-	BC	-	10	/	315	/	*	/	*	/	*	*	/	*

Proportional pressure relief valve, piloted

A = off-board driver, see section 3
AEB = basic on-board digital driver
AES = full on-board digital driver

IO-Link interface, only for AEB, see section 7 :
NP = Not present **IL** = IO-Link

Fieldbus interfaces, only for AES, see section 8 :
BC = CANopen **EH** = EtherCAT
BP = PROFIBUS DP

Valve size ISO 6264: **10, 20, 32**

Max regulated pressure:
50 = 50 bar **210** = 210 bar **350**= 350 bar
100 = 100 bar **315** = 315 bar

(1) For possible combined options, see section 16

Hydraulic options (1):
E = external pilot
Y = external drain (only pipe connection G ¼")

Electronic options, only for **AEB-NP** and **AES (1)**:
I = current reference input 4 ÷ 20 mA
Q = enable signal
Z = double power supply, enable, fault and monitor signals - 12 pin connector

Bluetooth option, only for **AEB** and **AES (1)**, see section 6 :
T = Bluetooth adapter supplied with the valve

Coil voltage, only for **A** - see section 17 :
- = standard coil for 24VDC Atos drivers
6 = optional coil for 12VDC Atos drivers
18 = optional coil for low current drivers

Series number

Seals material, see section 12 :
- = NBR
PE = FKM
BT = NBR low temp.

2 HYDRAULIC SYMBOLS

AGMZO-A

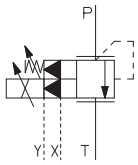

AGMZO-AEB AGMZO-AES

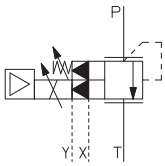

3 OFF-BOARD ELECTRONIC DRIVERS - only for **A**

Drivers model	E-MI-AC-01F		E-MI-AS-IR		E-BM-AS-PS		E-BM-AES
Type	Analog		Digital				
Voltage supply (VDC)	12	24	12	24	12	24	24
Valve coil option	/6	std	/6	std	/6	std	std
Format	plug-in to solenoid				DIN-rail panel		
Tech table	G010		G020		G030		GS050

4 GENERAL NOTES

Atos digital proportionals valves are CE marked according to the applicable directives (e.g. Immunity and Emission EMC Directive).
Installation, wirings and start-up procedures must be performed according to the general prescriptions shown in tech table **FS900** and in the user manuals included in the E-SW-SETUP programming software.

5 VALVE SETTINGS AND PROGRAMMING TOOLS - see tech. table **GS500**

5.1 Atos CONNECT mobile App

Free downloadable App for smartphones and tablets which allows quick access to valve main functional parameters and basic diagnostic information via Bluetooth, thus avoiding physical cable connection and significantly reducing commissioning time.
Atos CONNECT supports Atos digital valve drivers equipped with E-A-BTH adapter or with built-in Bluetooth. It does not support valves with p/Q control or axis controls.

Download on the App Store

GET IT ON Google Play

5.2 E-SW-SETUP PC software

Free downloadable software for PC allows to set all valve functional parameters and to access complete diagnostic information of digital valve drivers via Bluetooth/USB service port.
Atos E-SW-SETUP PC software supports all Atos digital valve drivers and it is available at www.atos.com in MyAtos area.

WARNING: drivers USB port is not isolated! For E-C-SB-USB/M12 cable, the use of E-A-SB-USB/OPT isolator adapter is highly recommended for PC protection

Bluetooth or USB connection

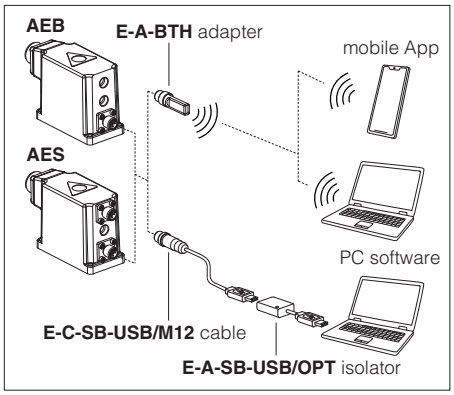

6 BLUETOOTH OPTION - see tech. table **GS500**

T option adds Bluetooth® connectivity to Atos valve drivers thanks to E-A-BTH adapter, which can be left permanently installed on-board, to allow the Bluetooth connection with the valve drivers at any time. E-A-BTH adapter can also be purchased separately and used to connect with any supported Atos digital product.
Bluetooth connection to the valve can be protected against unauthorised access by setting a personal password. The adapter leds visually indicates the status of valve driver and Bluetooth connection.

WARNING: for the list of countries where the Bluetooth adapter has been approved, see tech. table **GS500**
T option is not available for the Indian market, so the Bluetooth adapter must be ordered separately.

7 IO-LINK - only for **AEB**, see tech. table **GS520**

IO-Link allows low cost digital communication between the valve and machine central unit. The valve is directly connected to a port of an IO-Link master (point-to-point connection) via low-cost unshielded cables for digital reference, diagnostic and settings. The IO-Link master works as a hub exchanging this information with the machine central unit via fieldbus.

8 FIELDBUS - only for **AES**, see tech. table **GS510**

Fieldbus allows valve direct communication with machine control unit for digital reference, valve diagnostics and settings. These execution allow to operate the valves through fieldbus or analog signals available on the main connector.

9 GENERAL CHARACTERISTICS

Assembly position	Any position
Subplate surface finishing to ISO 4401	Acceptable roughness index: Ra ≤ 0,8, recommended Ra 0,4 – Flatness ratio 0,01/100
MTTFd valves according to EN ISO 13849	75 years, for further details see technical table P007
Ambient temperature range	**A:** **Standard** = -20°C ÷ +70°C **/PE** option = -20°C ÷ +70°C **/BT** option = -40°C ÷ +60°C **AEB, AES:** **Standard** = -20°C ÷ +60°C **/PE** option = -20°C ÷ +60°C **/BT** option = -40°C ÷ +60°C
Storage temperature range	**A:** **Standard** = -20°C ÷ +80°C **/PE** option = -20°C ÷ +80°C **/BT** option = -40°C ÷ +70°C **AEB, AES:** **Standard** = -20°C ÷ +70°C **/PE** option = -20°C ÷ +70°C **/BT** option = -40°C ÷ +70°C
Surface protection	Zinc coating with black passivation, galvanic treatment (driver housing for AEB and AES)
Corrosion resistance	Salt spray test (EN ISO 9227) > 200 h
Vibration resistance	See technical table G004 (for AEB and AES)
Compliance	CE according to EMC directive 2014/30/EU (Immunity: EN 61000-6-2; Emission: EN 61000-6-3) RoHS Directive 2011/65/EU as last update by 2015/863/EU REACH Regulation (EC) n°1907/2006

10 HYDRAULIC CHARACTERISTICS - based on mineral oil ISO VG 46 at 50 °C

Valve model		AGMZO-*-10	AGMZO-*-20	AGMZO-*-32
Max regulated pressure	[bar]	50; 100; 210; 315; 350		
Max pressure at port P	[bar]	350		
Max pressure at port T	[bar]	210		
Min regulated pressure	[bar]	see min. pressure / flow diagrams at section 13		
Max flow	[l/min]	200	400	600
Response time 0-100% step signal (depending on installation) **(1)**	[ms]	≤ 120	≤ 135	≤ 150
Hysteresis		≤ 2 [% of max pressure]		
Linearity		≤ 3 [% of max pressure]		
Repeatability		≤ 2 [% of max pressure]		

Note: above performance data refer to valves coupled with Atos electronic drivers, see section 3

(1) Average response time value; the pressure variation in consequence of a modification of the reference input signal to the valve is affected by the stiffness of the hydraulic circuit: greater is the stiffness of the circuit, faster is the dynamic response.

11 ELECTRICAL CHARACTERISTICS

Power supplies	Nominal : +24 VDC Rectified and filtered : VRMS = 20 ÷ 32 VMAX (ripple max 10 % VPP)				
Max power consumption	**A** = 30 W **AEB**, **AES** = 50 W				
Coil voltage code	standard		option /6		option /18
Max. solenoid current	2,6 A		3,25 A		1,5 A
Coil resistance R at 20°C	3 ÷ 3,3 Ω		2 ÷ 2,2 Ω		13 ÷ 13,4 Ω
Analog input signals	Voltage: range ±10 VDC (24 VMAX tolerant) Input impedance: Ri > 50 kΩ Current: range ±20 mA Input impedance: Ri = 500 Ω				
Monitor output	Output range: voltage ±5 VDC @ max 5 mA				
Enable input	Range: 0 ÷ 9 VDC (OFF state), 15 ÷ 24 VDC (ON state), 9 ÷ 15 VDC (not accepted); Input impedance: Ri > 87 kΩ				
Fault output	Output range : 0 ÷ 24 VDC (ON state ≅ VL+ [logic power supply] ; OFF state ≅ 0 V) @ max 50 mA; external negative voltage not allowed (e.g. due to inductive loads)				
Alarms	Solenoid not connected/short circuit, cable break with current reference signal, over/under temperature, current control monitoring, power supplies level				
Insulation class	H (180°) Due to the occurring surface temperatures of the solenoid coils, the European standards ISO 13732-1 and EN982 must be taken into account				
Protection degree to DIN EN60529	**A** = IP65; **AEB**, **AES** = IP66 / IP67 with mating connectors				
Duty factor	Continuous rating (ED=100%)				
Tropicalization	Tropical coating on electronics PCB				
Additional characteristics	Short circuit protection of solenoid's current supply; current control by P.I.D. with rapid solenoid switching; protection against reverse polarity of power supply				
Communication interface	USB Atos ASCII coding	IO-Link Interface and System Specification 1.1.3	CANopen EN50325-4 + DS408	PROFIBUS DP EN50170-2/IEC61158	EtherCAT IEC 61158
Communication physical layer	not insulated USB 2.0+USB OTG	SDCI class port B	optical insulated CAN ISO11898	optical insulated RS485	Fast Ethernet, insulated 100 Base TX
Recommended wiring cable	LiYCY shielded cables, see section 24				

Note: a maximum time of 500 ms (depending on communication type) has to be considered between the driver energizing with the 24 VDC power supply and when the valve is ready to operate. During this time the current to the valve coils is switched to zero.

12 SEALS AND HYDRAULIC FLUIDS - for other fluids not included in below table, consult our technical office

Seals, recommended fluid temperature		NBR seals (standard) = -20°C ÷ +60°C (+80°C for **A**), with HFC hydraulic fluids = -20°C ÷ +50°C FKM seals (/PE option) = -20°C ÷ +80°C NBR low temp. seals (/BT option) = -40°C ÷ +60°C, with HFC hydraulic fluids = -20°C ÷ +50°C		
Recommended viscosity		20 ÷ 100 mm²/s - max allowed range 15 ÷ 380 mm²/s		
Max fluid contamination level	normal operation	ISO4406 class 18/16/13 NAS1638 class 7		see also filter section at www.atos.com or KTF catalog
	longer life	ISO4406 class 16/14/11 NAS1638 class 5		
Hydraulic fluid		**Suitable seals type**	**Classification**	**Ref. Standard**
Mineral oils		NBR, FKM, NBR low temp.	HL, HLP, HLPD, HVLP, HVLPD	DIN 51524
Flame resistant without water		FKM	HFDU, HFDR	ISO 12922
Flame resistant with water		NBR, NBR low temp.	HFC	

13 DIAGRAMS (based on mineral oil ISO VG 46 at 50 °C)

1 = Regulation diagrams
with flow rate Q = 50 l/min

2 = Pressure/flow diagrams
with reference signal set at Q = 50 l/min

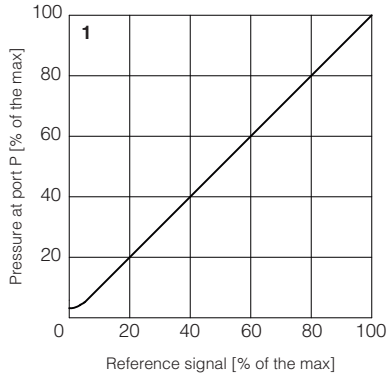

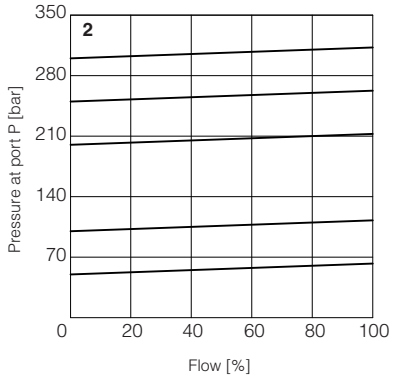

3-8 = Min. pressure/flow diagrams
with zero reference signal

3 = AGMZO-*-10/50, 100, 210, 315
4 = AGMZO-*-10/350
5 = AGMZO-*-20/50, 100, 210, 315
6 = AGMZO-*-20/350
7 = AGMZO-*-32/50, 100, 210, 315
8 = AGMZO-*-32/350

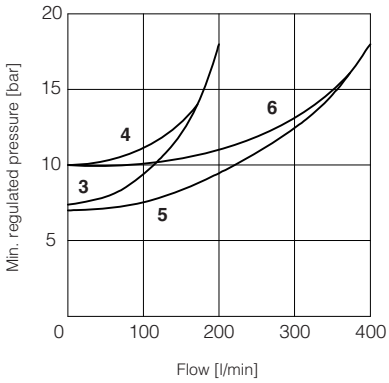

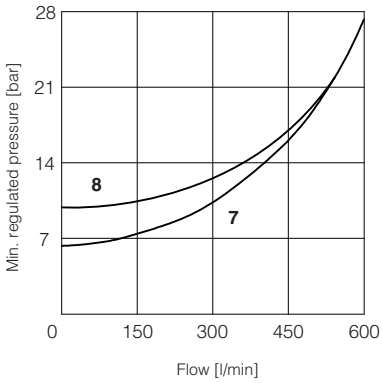

14 HYDRAULIC OPTIONS

E = External pilot option to be selected when the pilot pressure is supplied from a different line respect to the P main line.
With option E the internal connection between port P and X of the valve is plugged.
The pilot pressure must be connected to the X port available on the valve's mounting surface or on main body (threaded pipe connection G ¼").

Y = The external drain is mandatory in case the main line T is subjected to pressure peaks or it is pressurized.
The Y drain port has a threaded connection G ¼" available on the pilot stage body.

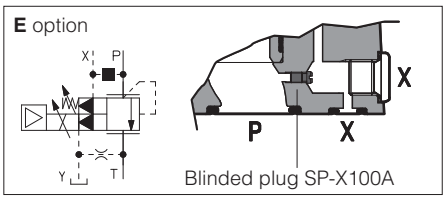

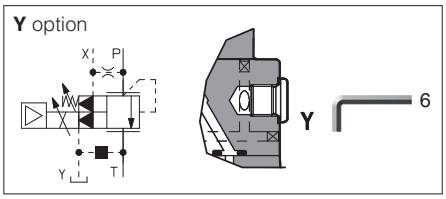

15 ELECTRONIC OPTIONS - only for **AEB-NP** and **AES**

I = This option provides 4 ÷ 20 mA current reference, instead of the standard 0 ÷ 10 VDC.
Input signal can be reconfigured via software selecting between voltage and current, within a maximum range of ±10 VDC or ±20 mA.
It is normally used in case of long distance between the machine control unit and the valve or where the reference signal can be affected by electrical noise; the valve functioning is disabled in case of reference signal cable breakage.

Q = This option permits to inhibit the valve function without removing the power supply to the driver. Upon disable command the current to the solenoid is zeroed and the valve's spool moves to rest position.
The option /Q is suggested for all cases where the valve has to be frequently inhibited during the machine cycle – see 21.5 for signal specifications.

Z = This option provides, on the 12 pin main connector, the following additional features:
Fault output signal - see 21.6
Enable input signal - see above option /Q
Power supply for driver's logics and communication - see 21.2

16 POSSIBLE COMBINED OPTIONS

Hydraulic options: all combination possible

Electronic options: /IQ, /IZ

Note: **/T** Bluetooth adapter option can be combined with all other options

17 COIL VOLTAGE OPTIONS - only for **A**

6 = Optional coil to be used with Atos drivers with power supply 12 VDC.

18 = Optional coil to be used with electronic drivers not supplied by Atos.

18 MECHANICAL PRESSURE LIMITER

The AGMZO are provided with mechanical pressure limiter acting as protection against overpressure. For safety reasons the factory setting of the mechanical pressure limiter is fully unloaded (min pressure). At the first commissioning it must be set at a value lightly higher than the max pressure regulated with the proportional control.
For the pressure setting of the mechanical pressure limiter, proceed according to following steps:

- apply the max reference input signal to the valve's driver. The system pressure will not increase until the mechanical pressure limiter remains unloaded.
- turn clockwise the adjustment screw ① until the system pressure will increase up to a stable value corresponding to the pressure setpoint at max reference input signal.
- turn clockwise the adjustment screw ① of additional 1 or 2 turns to ensure that the mechanical pressure limiter remains closed during the proportional valve working.

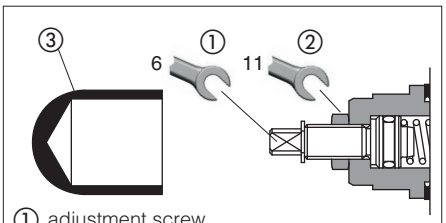

① adjustment screw
② locking nut
③ protection cap

19 REMOTE PRESSURE UNLOADING

The **P** main line can be remotely unloaded by connecting the valve X port to a solenoid valve as shown in the below scheme (venting valve).
This function can be used in emergency to unload the system pressure by-passing the proportional control.

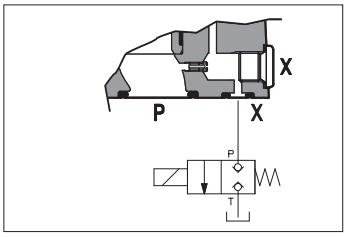

20 AIR BLEEDING

At the first valve commissioning the air eventually trapped inside the solenoid must be bled-off through the screw ① located at the rear side of the solenoid housing.
The presence of air may cause pressure instability and vibrations.

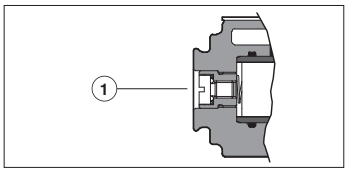

21 POWER SUPPLY AND SIGNALS SPECIFICATIONS - only for **AEB-NP** and **AES**

Generic electrical output signals of the valve (e.g. fault or monitor signals) must not be directly used to activate safety functions, like to switch-ON/OFF the machine's safety components, as prescribed by the European standards (Safety requirements of fluid technology systems and components-hydraulics, ISO 4413).

For **AEB-IL** signals see section 22

21.1 Power supply (V+ and V0)

The power supply must be appropriately stabilized or rectified and filtered: apply at least a 10000 µF/40 V capacitance to single phase rectifiers or a 4700 µF/40 V capacitance to three phase rectifiers. In case of separate power supply see 21.2.

⚠ A safety fuse is required in series to each power supply: 2,5 A time lag fuse.

21.2 Power supply for driver's logic and communication (VL+ and VL0) - only for **/Z** option

The power supply for driver's logic and communication must be appropriately stabilized or rectified and filtered: apply at least a 10000 µF/40 V capacitance to single phase rectifiers or a 4700 µF/40 V capacitance to three phase rectifiers.
The separate power supply for driver's logic on pin 9 and 10, allow to remove solenoid power supply from pin 1 and 2 maintaining active the diagnostics, USB and fieldbus communications.

⚠ A safety fuse is required in series to each driver's logic and communication power supply: 500 mA fast fuse.

21.3 Reference input signal (INPUT+)

The driver controls in closed loop the current to the valve proportionally to the external reference input signal.
Reference input signal is factory preset according to selected valve code, defaults are 0 ÷ 10 VDC for standard and 4 ÷ 20 mA for /I option.
Input signal can be reconfigured via software selecting between voltage and current, within a maximum range of ±10 VDC or ± 20 mA.
Drivers with fieldbus interface (BC, BP, EH) can be software set to receive reference signal directly from the machine control unit (fieldbus reference). Analog reference input signal can be used as on-off commands with input range 0 ÷ 24VDC.

21.4 Monitor output signal (MONITOR)

The driver generates an analog output signal (MONITOR) proportional to the actual coil current of the valve; the monitor output signal can be software set to show other signals available in the driver (e.g. analog reference, fieldbus reference).
Monitor output signal is factory preset according to selected valve code, default settings is 0 ÷ 5 VDC (1V = 1A).
Output signal can be reconfigured via software, within a maximum range of ±5 VDC.

21.5 Enable input signal (ENABLE) - not for standard

To enable the driver, supply a 24 VDC on pin 3 (pin C): Enable input signal allows to enable/disable the current supply to the solenoid, without removing the electrical power supply to the driver; it is used to active the communication and the other driver functions when the valve must be disabled for safety reasons. This condition **does not comply** with norms IEC 61508 and ISO 13849.
Enable input signal can be used as generic digital input by software selection.

21.6 Fault output signal (FAULT) - only for **/Z** option

Fault output signal indicates fault conditions of the driver (solenoid short circuits/not connected, reference signal broken for 4 ÷ 20 mA input, etc.).
Fault presence corresponds to 0 VDC, normal working corresponds to 24 VDC.
Fault status is not affected by the Enable input signal.

22 IO-LINK SIGNALS SPECIFICATIONS - only for **AEB-IL**

22.1 Power supply for IO-Link communication (L+ and L-)

The IO-Link master provides dedicated 24 VDC power supply for IO-Link communication.
Maximum power consumption: 2 W
Internal electrical isolation of power L+, L- from P24, N24

22.2 Power supply for driver's logic and valve regulation (P24 and N24)

The IO-Link master provides dedicated 24 VDC power supply for valve regulation, logics and diagnostics.
Maximum power consumption: 50 W
Internal electrical isolation of power P24, N24 from L+, L-

22.3 IO-Link data line (C/Q)

C/Q signal is used to establish communication between IO-Link master and valve.

23 ELECTRONIC CONNECTIONS

23.1 Main connector signals - 7 pin (A1) Standard and /Q option - for AEB-NP and AES

PIN	Standard	/Q	TECHNICAL SPECIFICATIONS	NOTES
A	**V+**		Power supply 24 VDC	Input - power supply
B	**V0**		Power supply 0 VDC	Gnd - power supply
C	**AGND**		Analog ground	Gnd - analog signal
		ENABLE	Enable (24 VDC) or disable (0 VDC) the driver, referred to V0	Input - on/off signal
D	**INPUT+**		Reference input signal: ±10 VDC / ±20 mA maximum range Defaults are 0 ÷ 10 VDC for standard and 4 ÷ 20 mA for /I option	Input - analog signal **Software selectable**
E	**INPUT-**		Negative reference input signal for INPUT+	Input - analog signal
F	**MONITOR** referred to: AGND | V0		Monitor output signal: ±5 VDC maximum range Default is 0 ÷ 5 VDC (1V = 1A)	Output - analog signal **Software selectable**
G	**EARTH**		Internally connected to driver housing	

23.2 Main connector signals - 12 pin (A2) /Z option - for AEB-NP and AES

PIN	/Z	TECHNICAL SPECIFICATIONS	NOTES
1	**V+**	Power supply 24 VDC	Input - power supply
2	**V0**	Power supply 0 VDC	Gnd - power supply
3	**ENABLE**	Enable (24 VDC) or disable (0 VDC) the driver, referred to VL0	Input - on/off signal
4	**INPUT+**	Reference input signal: ±10 VDC / ±20 mA maximum range Defaults are 0 ÷ 10 VDC for standard and 4 ÷ 20 mA for /I option	Input - analog signal **Software selectable**
5	**INPUT-**	Negative reference input signal for INPUT+	Input - analog signal
6	**MONITOR**	Monitor output signal: ±5 VDC maximum range, referred to VL0 Default is 0 ÷ 5 VDC (1V = 1A)	Output - analog signal **Software selectable**
7	**NC**	Do not connect	
8	**NC**	Do not connect	
9	**VL+**	Power supply 24 VDC for driver's logic and communication	Input - power supply
10	**VL0**	Power supply 0 VDC for driver's logic and communication	Gnd - power supply
11	**FAULT**	Fault (0 VDC) or normal working (24 VDC), referred to VL0	Output - on/off signal
PE	**EARTH**	Internally connected to driver housing	

Note: do not disconnect VL0 before VL+ when the driver is connected to PC USB port

23.3 IO-Link connector signals - M12 - 5 pin - Coding A, port class B (A) only for AEB-IL

PIN	SIGNAL	TECHNICAL SPECIFICATIONS	NOTES
1	**L+**	Power supply 24 VDC for IO-Link communication	Input - power supply
2	**P24**	Power supply 24 VDC for valve regulation, logics and diagnostics	Input - power supply
3	**L-**	Power supply 0 VDC for IO-Link communication	Gnd - power supply
4	**C/Q**	IO-Link data line	Input / Output - signal
5	**N24**	Power supply 0 VDC for valve regulation, logics and diagnostics	Gnd - power supply

Note: L+, L- and P24, N24 are electrically isolated

23.4 Communication connectors - for AEB (B) and AES (B) - (C)

(B) USB connector - M12 - 5 pin always present		
PIN	**SIGNAL**	**TECHNICAL SPECIFICATION (1)**
1	**+5V_USB**	Power supply
2	**ID**	Identification
3	**GND_USB**	Signal zero data line
4	**D-**	Data line -
5	**D+**	Data line +

(C1) BC fieldbus execution, connector - M12 - 5 pin (2)		
PIN	**SIGNAL**	**TECHNICAL SPECIFICATION (1)**
1	**CAN_SHLD**	Shield
2	**NC**	do not connect
3	**CAN_GND**	Signal zero data line
4	**CAN_H**	Bus line (high)
5	**CAN_L**	Bus line (low)

(C2) BP fieldbus execution, connector - M12 - 5 pin (2)		
PIN	**SIGNAL**	**TECHNICAL SPECIFICATION (1)**
1	**+5V**	Termination supply signal
2	**LINE-A**	Bus line (high)
3	**DGND**	Data line and termination signal zero
4	**LINE-B**	Bus line (low)
5	**SHIELD**	

(1) Shield connection on connector's housing is recommended

(C3) (C4) EH fieldbus execution, connector - M12 - 4 pin (2)		
PIN	**SIGNAL**	**TECHNICAL SPECIFICATION (1)**
1	**TX+**	Transmitter
2	**RX+**	Receiver
3	**TX-**	Transmitter
4	**RX-**	Receiver
Housing	**SHIELD**	

(2) Only for **AES** execution

23.5 Solenoid connection - only for A

PIN	SIGNAL	TECHNICAL SPECIFICATION	Connector code 666
1	**COIL**	Power supply	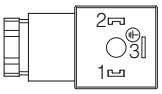
2	**COIL**	Power supply	
3	**GND**	Ground	

23.6 AEB-NP connections layout

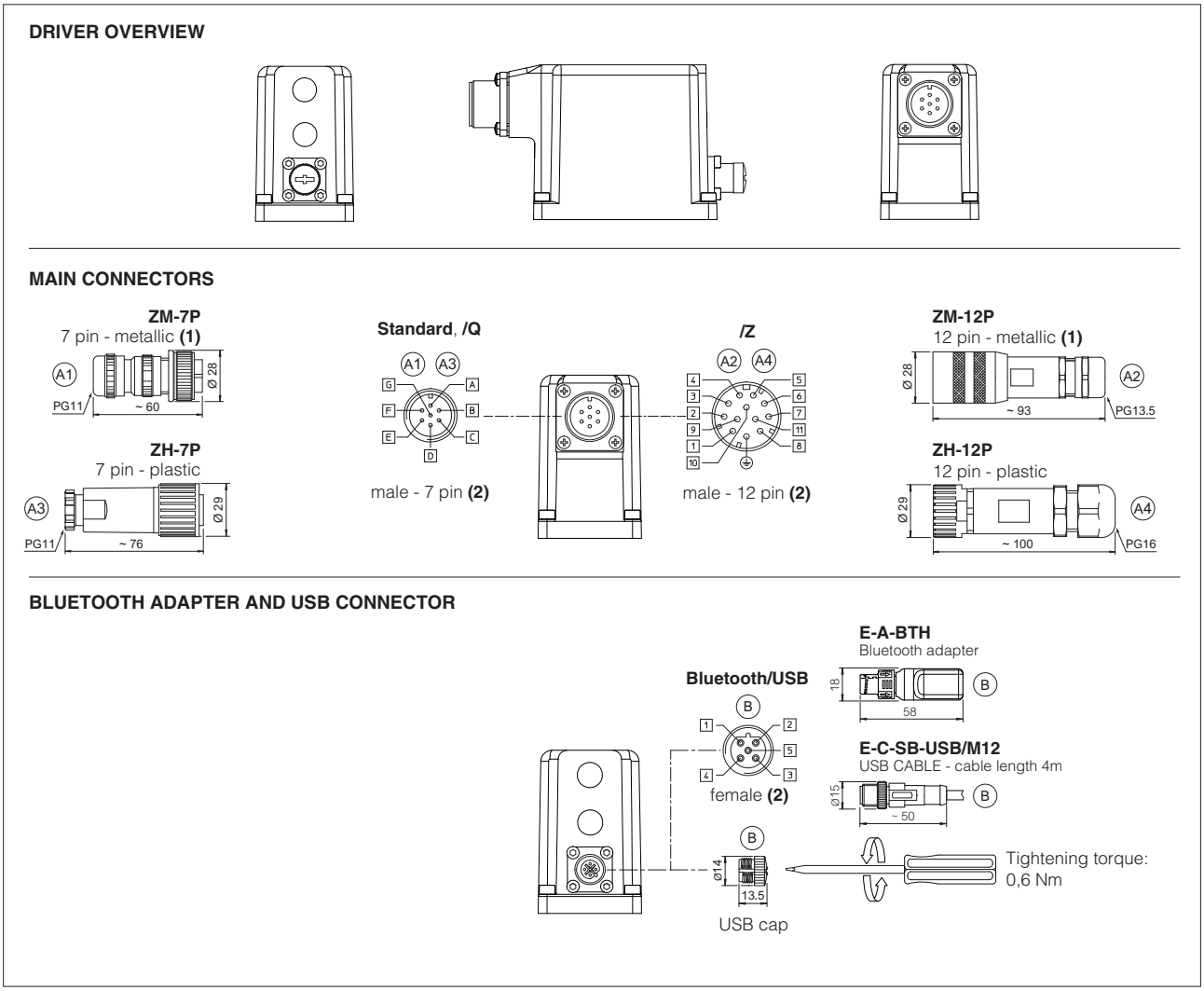

(1) Use of metallic connectors is strongly recommended in order to fulfill EMC requirements **(2)** Pin layout always referred to driver's view

23.7 AEB-IL connections layout

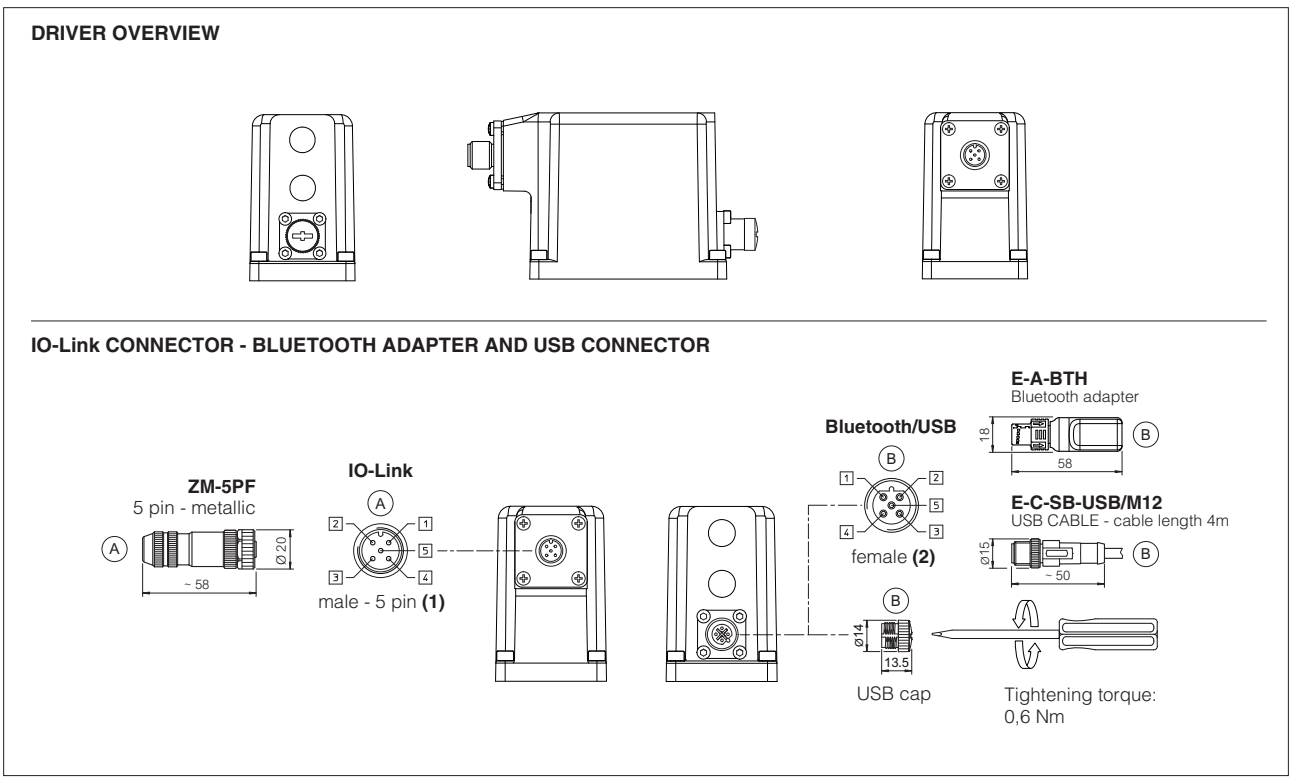

(1) Use of metallic connectors is strongly recommended in order to fulfill EMC requirements **(2)** Pin layout always referred to driver's view

23.8 AES connections layout

DRIVER OVERVIEW

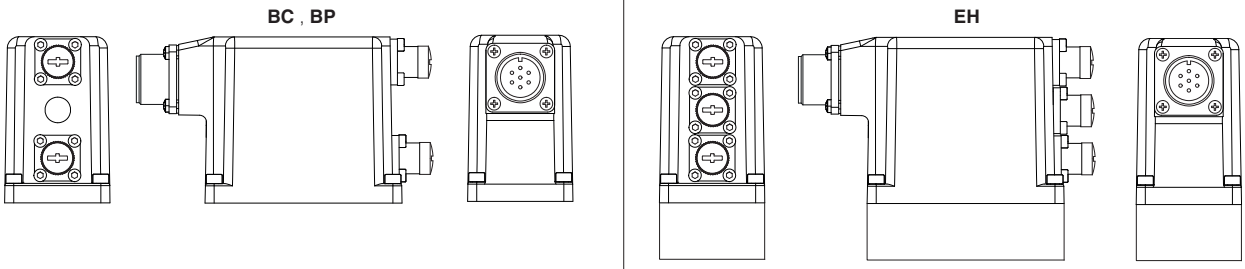

MAIN CONNECTORS

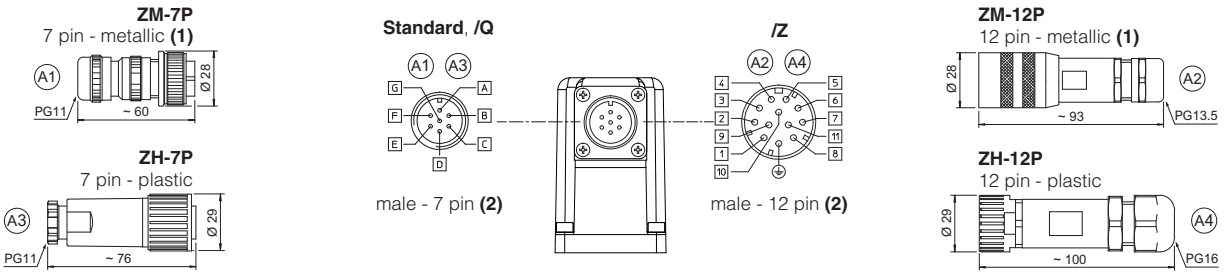

FIELDBUS CONNECTORS

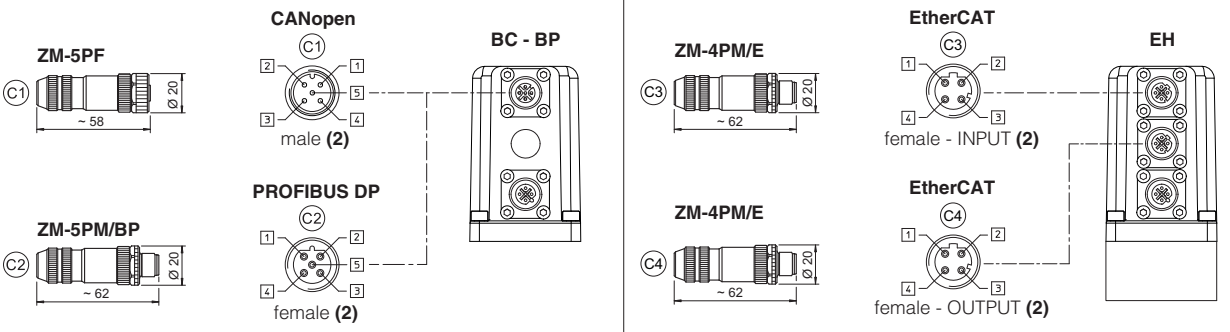

BLUETOOTH ADAPTER AND USB CONNECTOR

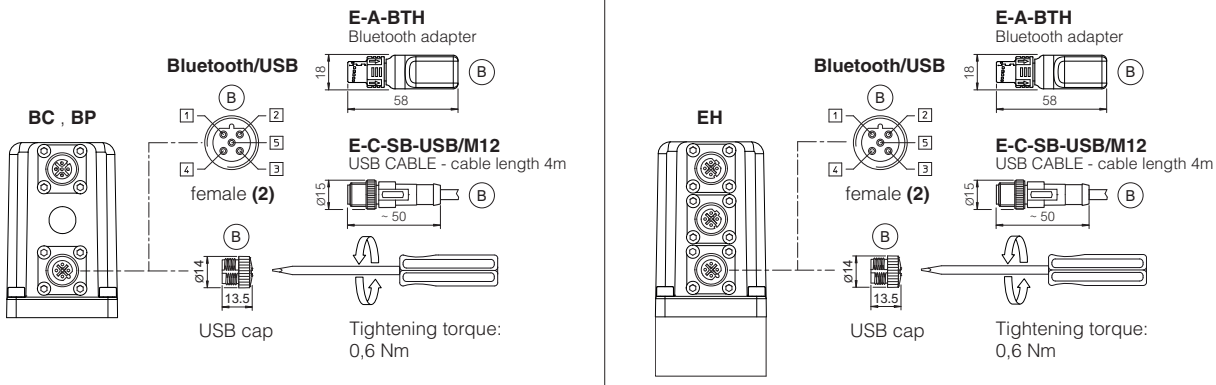

(1) Use of metallic connectors is strongly recommended in order to fulfill EMC requirements **(2)** Pin layout always referred to driver's view

24 CONNECTORS CHARACTERISTICS - to be ordered separately

24.1 Main connectors - 7 pin - for **AEB-NP** and **AES**

CONNECTOR TYPE	POWER SUPPLY AND SIGNALS	POWER SUPPLY AND SIGNALS
CODE	(A1) ZM-7P	(A3) ZH-7P
Type	7pin female straight circular	7pin female straight circular
Standard	According to MIL-C-5015	According to MIL-C-5015
Material	Metallic	Plastic reinforced with fiber glass
Cable gland	PG11	PG11
Recommended cable	LiYCY 7 x 0,75 mm² max 20 m (logic and power supply) or LiYCY 7 x 1 mm² max 40 m (logic and power supply)	LiYCY 7 x 0,75 mm² max 20 m (logic and power supply) or LiYCY 7 x 1 mm² max 40 m (logic and power supply)
Conductor size	up to 1 mm² - available for 7 wires	up to 1 mm² - available for 7 wires
Connection type	to solder	to solder
Protection (EN 60529)	IP 67	IP 67

24.2 Main connectors - 12 pin - for **AEB-NP** and **AES**

CONNECTOR TYPE	POWER SUPPLY AND SIGNALS	POWER SUPPLY AND SIGNALS
CODE	(A2) ZM-12P	(A4) ZH-12P
Type	12pin female straight circular	12pin female straight circular
Standard	DIN 43651	DIN 43651
Material	Metallic	Plastic reinforced with fiber glass
Cable gland	PG13,5	PG16
Recommended cable	LiYCY 12 x 0,75 mm² max 20 m (logic and power supply)	LiYCY 10 x 0,14mm² max 40 m (logic) LiYY 3 x 1mm² max 40 m (power supply)
Conductor size	0,5 mm² to 1,5 mm² - available for 12 wires	0,14 mm² to 0,5 mm² - available for 9 wires 0,5 mm² to 1,5 mm² - available for 3 wires
Connection type	to crimp	to crimp
Protection (EN 60529)	IP 67	IP 67

24.3 IO-Link connector - only for **AEB-IL**

CONNECTOR TYPE	IL IO-Link
CODE	(A) ZM-5PF
Type	5pin female straight circular
Standard	M12 coding A – IEC 61076-2-101
Material	Metallic
Cable gland	Pressure nut - cable diameter 6÷8 mm
Recommended cable	5 x 0,75 mm² max 20 m
Connection type	screw terminal
Protection (EN 60529)	IP 67

24.4 Fieldbus communication connectors - only for **AES**

CONNECTOR TYPE	BC CANopen (1)		BP PROFIBUS DP (1)		EH EtherCAT (2)
CODE	(C1) ZM-5PF	(C2) ZM-5PM	(C1) ZM-5PF/BP	(C2) ZM-5PM/BP	(C1) (C2) ZM-4PM/E
Type	5 pin female straight circular	5 pin male straight circular	5 pin female straight circular	5 pin male straight circular	4 pin male straight circular
Standard	M12 coding A – IEC 61076-2-101		M12 coding B – IEC 61076-2-101		M12 coding D – IEC 61076-2-101
Material	Metallic		Metallic		Metallic
Cable gland	Pressure nut - cable diameter 6÷8 mm		Pressure nut - cable diameter 6÷8 mm		Pressure nut - cable diameter 4÷8 mm
Cable	CANbus Standard (DR 303-1)		PROFIBUS DP Standard		Ethernet standard CAT-5
Connection type	screw terminal		screw terminal		terminal block
Protection (EN 60529)	IP67		IP 67		IP 67

(1) E-TRM-** terminators can be ordered separately - see tech table **GS500**

(2) Internally terminated

25 FASTENING BOLTS AND SEALS

	AGMZO-*-10	AGMZO-*-20	AGMZO-*-32
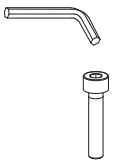	**Fastening bolts:** 4 socket head screws M12x35 class 12.9 Tightening torque = 125 Nm	**Fastening bolts:** 4 socket head screws M16x50 class 12.9 Tightening torque = 300 Nm	**Fastening bolts:** 4 socket head screws M20x60 class 12.9 Tightening torque = 600 Nm
	Seals: 2 OR 123 Diameter of ports P, T: Ø 14 mm 1 OR 109/70 Diameter of port X: Ø 3,2 mm	**Seals:** 2 OR 4112 Diameter of ports P, T: Ø 24 mm 1 OR 109/70 Diameter of port X: Ø 3,2 mm	**Seals:** 2 OR 4131 Diameter of ports P, T: Ø 28 mm 1 OR 109/70 Diameter of port X: Ø 3,2 mm

SIZE 10

ISO 6264: 2007
Mounting surface: 6264-06-09-1-97
(see table P005)

	Mass [kg]		
	A	AEB, AES	AES-EH
AGMZO-*-10	5,4	5,9	6,0

AGMZO-A-10

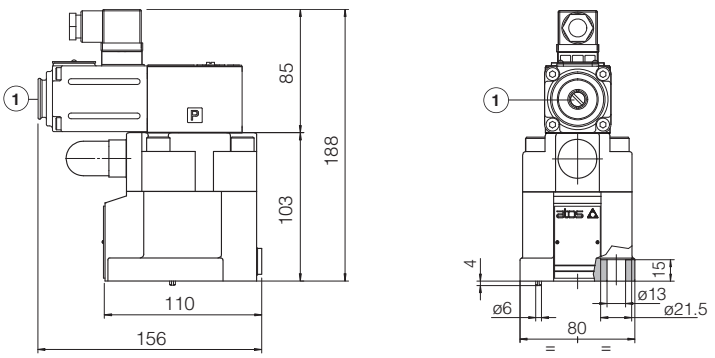

AGMZO-AEB-NP-10
AGMZO-AEB-IL-10

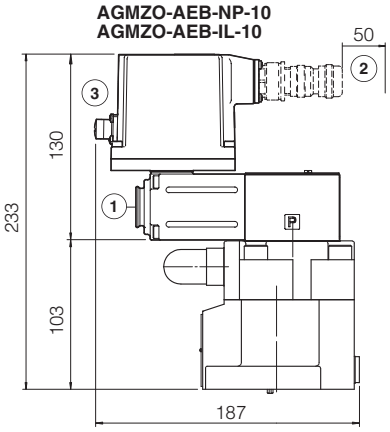

AGMZO-AES-BC-10
AGMZO-AES-BP-10

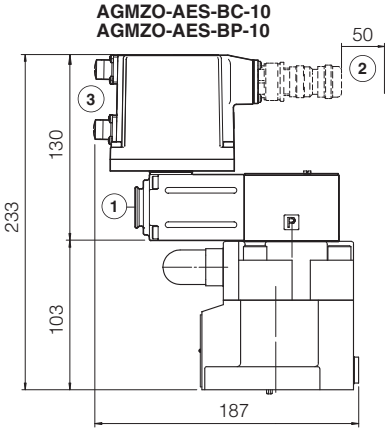

AGMZO-AES-EH-10

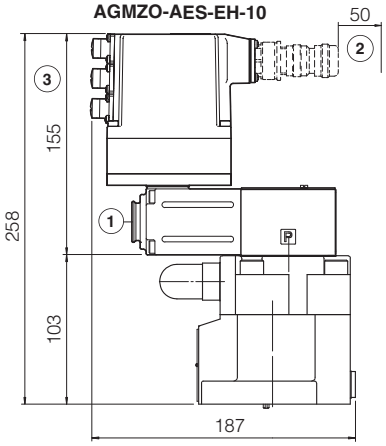

SIZE 20

ISO 6264: 2007
Mounting surface: 6264-08-13-1-97
(see table P005)

	Mass [kg]		
	A	AEB, AES	AES-EH
AGMZO-*-20	6,6	7,1	7,2

AGMZO-A-20

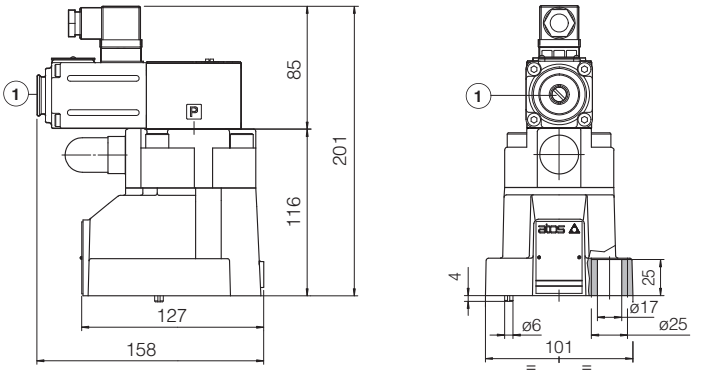

AGMZO-AEB-NP-20
AGMZO-AEB-IL-20

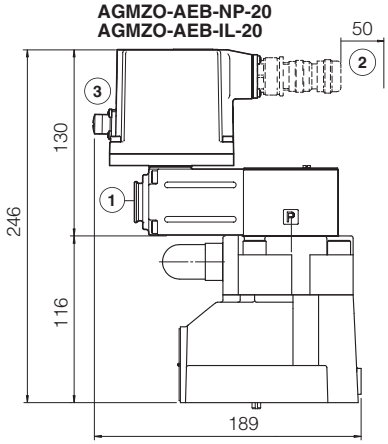

AGMZO-AES-BC-20
AGMZO-AES-BP-20

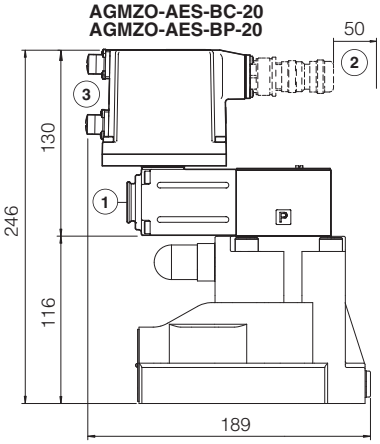

AGMZO-AES-EH-20

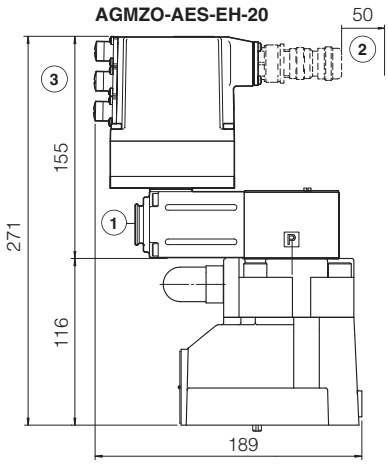

(1) = Air bleeding, see section 20
(2) = Space required for connection cable and for connector removal
(3) = The dimensions of connectors and Bluetooth adapter must be considered, see section 23.6, 23.7 and 23.8

SIZE 32

ISO 6264: 2007
Mounting surface: 6264-10-17-1-97
(see table P005)
(with M20 fixing holes instead of standard M18)

	Mass [kg]		
	A	**AEB, AES**	**AES-EH**
AGMZO-*-32	8,0	8,5	8,6

AGMZO-A-32

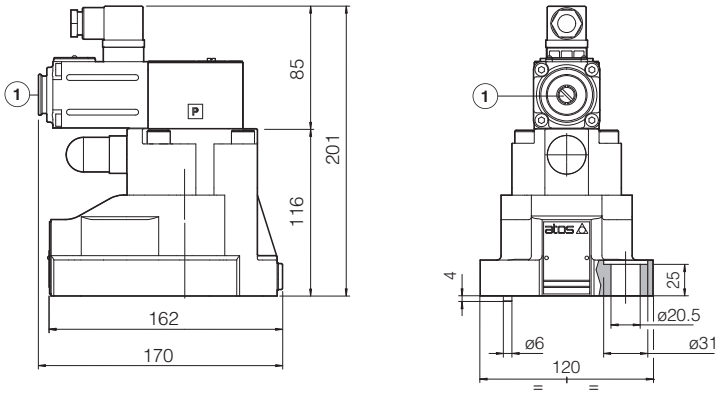

AGMZO-AEB-NP-32
AGMZO-AEB-IL-32

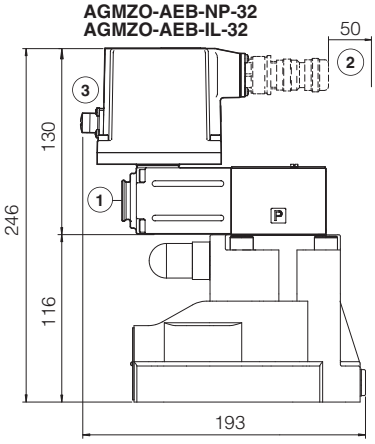

AGMZO-AES-BC-32
AGMZO-AES-BP-32

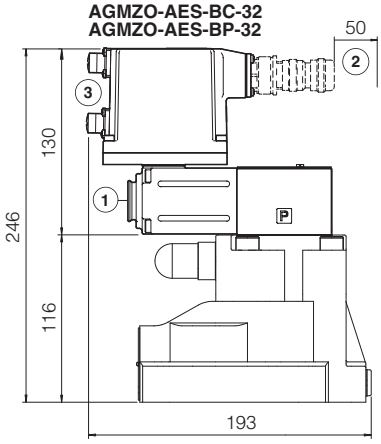

AGMZO-AES-EH-32

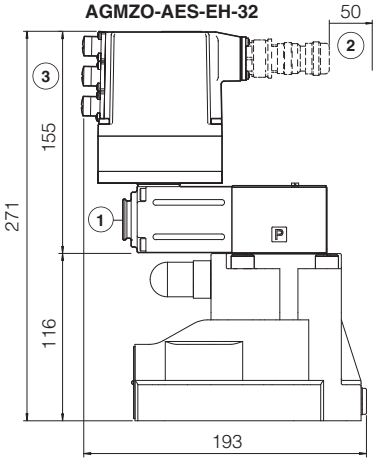

(1) = Air bleeding, see section 20
(2) = Space required for connection cable and for connector removal
(3) = The dimensions of connectors and Bluetooth adapter must be considered, see section 23.6, 23.7 and 23.8

27 RELATED DOCUMENTATION

FS001	Basics for digital electrohydraulics	**K800**	Electric and electronic connectors
FS900	Operating and maintenance information for proportional valves	**P005**	Mounting surfaces for electrohydraulic valves
G010	E-MI-AC analog driver	**QB200**	Quickstart for AEB valves commissioning
G020	E-MI-AS-IR digital driver	**QF200**	Quickstart for AES valves commissioning
G030	E-BM-AS digital driver	**E-MAN-MI-AS**	E-MI-AS-IR user manual (off-board)
GS050	E-BM-AES digital driver	**E-MAN-BM-AS**	E-BM-AS user manual (off-board)
GS500	Programming tools	**E-MAN-BM-AES**	E-BM-AES user manual (off-board)
GS510	Fieldbus	**E-MAN-RI-AEB**	AEB user manual
GS520	IO-Link interface	**E-MAN-RI-AES**	AES user manual

Proportional relief valves

piloted, without transducer

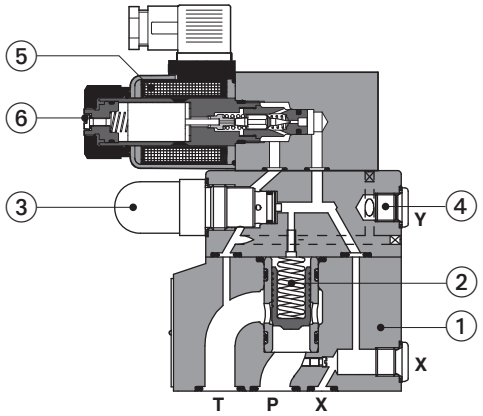

① Valve main body
② Main poppet
③ Mechanical pressure limiter
④ Drain port G 1/4" (option /Y)
⑤ Proportional solenoid
⑥ Screw for air bleeding

AGMZE-A-10

AGMZE-A

Poppet type, piloted, proportional pressure relief valves for open loop pressure controls.

They operate in association with off-board driver, which supply the proportional valves with proper current to align the valve regulation to the reference signal supplied to the driver.

The solenoids are certified according to North American standard **cURus**.

Size: **10**, **20**, **32** - ISO 6264
Max flow: **200**, **400**, **600 l/min**
Max pressure: **350 bar**

1 MODEL CODE

AGMZE - A - 10 / 315 / * - * / * * / *

AGMZE: Proportional pressure relief valve, piloted

A = for off-board driver, see section 3

Valve size ISO 6264: **10, 20, 32**

Max regulated pressure:
50 = 50 bar **210** = 210 bar **350** = 350 bar
100 = 100 bar **315** = 315 bar

Hydraulic options (1):
E = external pilot
Y = external drain (only pipe connection G 1/4")

Coil with special connectors, see section 16 :
- = omit for standard DIN connector
J = AMP Junior Timer connector
K = Deutsch connector
S = Lead Wire connection

Coil voltage, see section 12 :
- = standard coil for 24 VDC Atos drivers
6 = optional coil for 12 VDC Atos drivers
18 = optional coil for low current drivers **(2)**

Series number

Seals material, see section 8 :
- = NBR
PE = FKM
BT = HNBR

(1) Possible combined options: /EY
(2) Select valve's coil voltage **/18** in case of electronic drivers not supplied by Atos, with power supply 24 VDC and with max current limited to 1A

2 HYDRAULIC SYMBOL

AGMZE-A

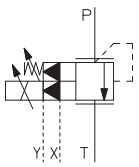

3 OFF-BOARD ELECTRONIC DRIVERS

Drivers model	E-MI-AC-01F		E-MI-AS-IR		E-BM-AS-PS		E-BM-AES
Type	Analog		Digital				
Voltage supply (VDC)	12	24	12	24	12	24	24
Valve coil option	/6	std	/6	std	/6	std	std
Format	plug-in to solenoid				DIN-rail panel		
Tech table	G010		G020		G030		GS050

4 GENERAL NOTES

Atos digital proportionals valves are CE marked according to the applicable directives (e.g. Immunity and Emission EMC Directive).
Installation, wirings and start-up procedures must be performed according to the general prescriptions shown in tech table **FS900** and in the installation notes supply with relevent components.

5 GENERAL CHARACTERISTICS

Assembly position	Any position
Subplate surface finishing to ISO 4401	Acceptable roughness index: Ra ≤ 0,8, recommended Ra 0,4 – Flatness ratio 0,01/100
MTTFd valves according to EN ISO 13849	75 years, see technical table P007
Ambient temperature range	**Standard** = -20°C ÷ +70°C **/PE** option = -20°C ÷ +70°C **/BT** option = -40°C ÷ +60°C
Storage temperature range	**Standard** = -20°C ÷ +80°C **/PE** option = -20°C ÷ +80°C **/BT** option = -40°C ÷ +70°C
Surface protection	Zinc coating with black passivation
Corrosion resistance	Salt spray test (EN ISO 9227) > 200 h
Conformity	CE according to EMC directive 2014/30/EU (Immunity: EN 61000-6-2; Emission: EN 61000-6-3) RoHS Directive 2011/65/EU as last update by 2015/863/EU REACH Regulation (EC) n°1907/2006

6 HYDRAULIC CHARACTERISTICS

Valve model		**AGMZE-A-10**	**AGMZE-A-20**	**AGMZE-A-32**
Max regulated pressure	[bar]	50; 100; 210; 315; 350		
Max pressure at port P	[bar]	350		
Max pressure at port T	[bar]	210		
Min regulated pressure	[bar]	see min. pressure / flow diagrams at section 11		
Max flow	[l/min]	200	400	600
Response time 0-100% step signal (depending on installation) **(1)**	[ms]	≤ 120	≤ 135	≤ 150
Hysteresis		≤ 2 [% of max pressure]		
Linearity		≤ 3 [% of max pressure]		
Repeatability		≤ 2 [% of max pressure]		

Note: above performance data refer to valves coupled with Atos electronic drivers, see section 3

(1) Average response time values; the pressure variation in consequence of a modification of the reference input signal to the valve is affected by the stiffness of the hydraulic circuit: greater is the stiffness of the circuit, faster is the dynamic response

7 ELECTRICAL CHARACTERISTICS

Power supplies	Nominal : +24 VDC Rectified and filtered : VRMS = 20 ÷ 32 VMAX (ripple max 10 % VPP)		
Coil voltage code	standard	option /6	option /18
Max. solenoid current	2,5 A	3 A	1,2 A
Coil resistance R at 20°C	3,1 Ω	2,1 Ω	13,1 Ω
Insulation class	H (180°) Due to the occuring surface temperatures of the solenoid coils, the European standards ISO 13732-1 and EN982 must be taken into account		
Protection degree to DIN EN60529	IP65 with mating connectors		
Duty factor	Continuous rating (ED=100%)		
Certification	**cURus** North American Standard		

8 SEALS AND HYDRAULIC FLUIDS - for other fluids not included in below table, consult our technical office

Seals, recommended fluid temperature		NBR seals (standard) = -20°C ÷ +80°C, with HFC hydraulic fluids = -20°C ÷ +50°C FKM seals (/PE option) = -20°C ÷ +80°C HNBR seals (/BT option) = -40°C ÷ +60°C, with HFC hydraulic fluids = -40°C ÷ +50°C		
Recommended viscosity		20 ÷ 100 mm²/s - max allowed range 15 ÷ 380 mm²/s		
Max fluid contamination level	normal operation	ISO4406 class 18/16/13 NAS1638 class 7		see also filter section at www.atos.com or KTF catalog
	longer life	ISO4406 class 16/14/11 NAS1638 class 5		
Hydraulic fluid		**Suitable seals type**	**Classification**	**Ref. Standard**
Mineral oils		NBR, FKM, HNBR	HL, HLP, HLPD, HVLP, HVLPD	DIN 51524
Flame resistant without water		FKM	HFDU, HFDR	ISO 12922
Flame resistant with water		NBR, HNBR	HFC	

9 DIAGRAMS (based on mineral oil ISO VG 46 at 50 °C)

1 = Regulation diagrams
with flow rate Q = 50 l/min

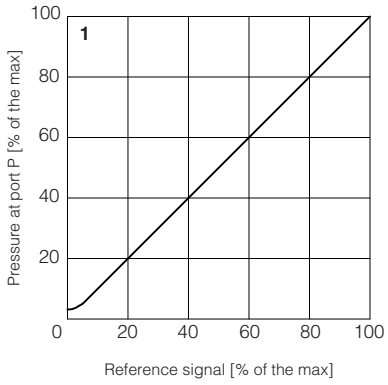

2 = Pressure/flow diagrams
with reference signal set at Q = 50 l/min

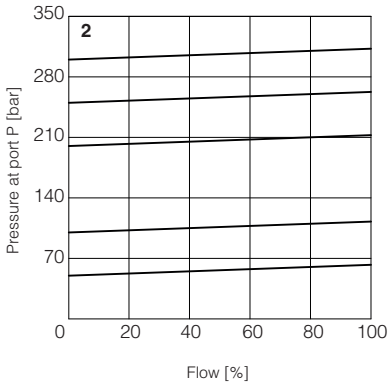

3-8 = Min. pressure/flow diagrams
with zero reference signal

3 = AGMZE-A-10/50, 100, 210, 315
4 = AGMZE-A-10/350
5 = AGMZE-A-20/50, 100, 210, 315
6 = AGMZE-A-20/350
7 = AGMZE-A-32/50, 100, 210, 315
8 = AGMZE-A-32/350

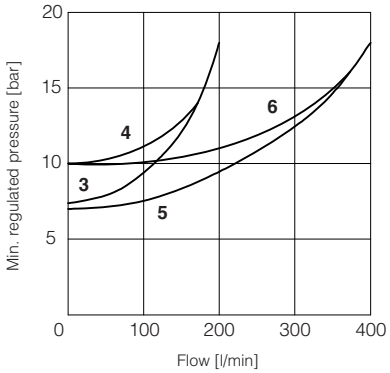

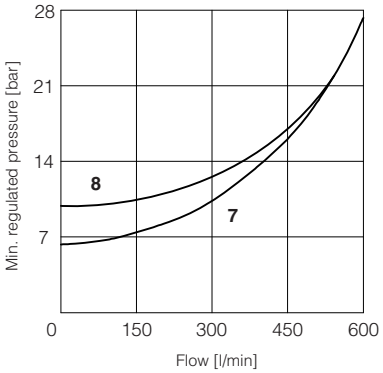

10 HYDRAULIC OPTIONS

E = External pilot option to be selected when the pilot pressure is supplied from a different line respect to the P main line.
With option E the internal connection between port P and X of the valve is plugged.
The pilot pressure must be connected to the X port available on the valve's mounting surface or on main body (threaded pipe connection G ¼").

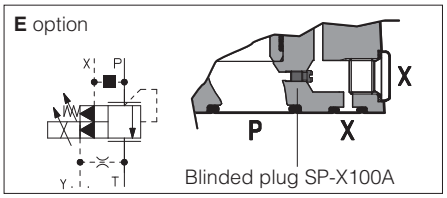

Y = The external drain is mandatory in case the main line T is subjected to pressure peaks or it is pressurized.
The Y drain port has a threaded connection G ¼" available on the pilot stage body.

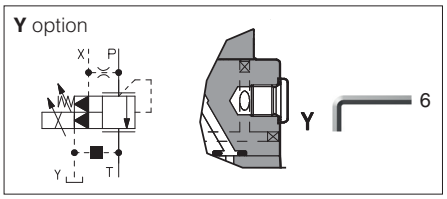

11 POSSIBLE COMBINED OPTIONS

/EY

12 COIL VOLTAGE OPTIONS

6 = Optional coil to be used with Atos drivers with power supply 12 VDC.

18 = Optional coil to be used with electronic drivers not supplied by Atos, with power supply 24 VDC and with max current limited to 1A.

13 MECHANICAL PRESSURE LIMITER

The AGMZE are provided with mechanical pressure limiter acting as protection against overpressure. For safety reasons the factory setting of the mechanical pressure limiter is fully unloaded (min pressure). At the first commissioning it must be set at a value lightly higher than the max pressure regulated with the proportional control.
For the pressure setting of the mechanical pressure limiter, proceed according to following steps:

- apply the max reference input signal to the valve's driver. The system pressure will not increase until the mechanical pressure limiter remains unloaded.
- turn clockwise the adjustment screw ① until the system pressure will increase up to a stable value corresponding to the pressure setpoint at max reference input signal.
- turn clockwise the adjustment screw ① of additional 1 or 2 turns to ensure that the mechanical pressure limiter remains closed during the proportional valve working.

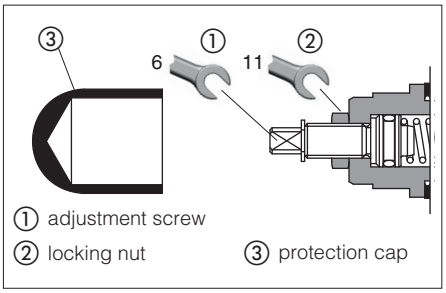

14 REMOTE PRESSURE UNLOADING

The **P** main line can be remotely unloaded by connecting the valve X port to a solenoid valve as shown in the below scheme (venting valve).
This function can be used in emergency to unload the system pressure by-passing the proportional control.

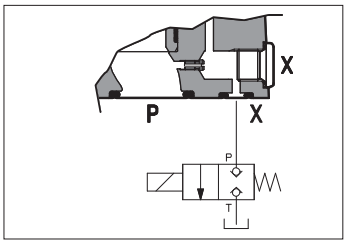

15 AIR BLEEDING

At the first valve commissioning the air eventually trapped inside the solenoid must be bled-off though the screw ① located at the rear side of the solenoid housing.
The presence of air may cause pressure instability and vibrations.

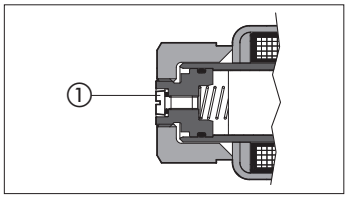

16 COILS WITH SPECIAL CONNECTORS

J option
Coil type COZEJ
AMP Junior Timer connector
Protection degree IP67

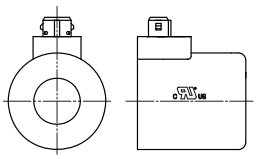

K option
Coil type COZEK
Deutsch connector, DT-04-2P male
Protection degree IP67

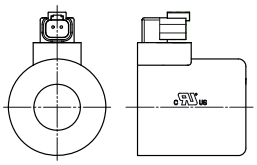

S option
Coil type COZES
Lead Wire connection
Cable lenght = 180 mm

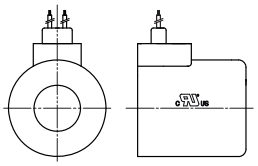

17 SOLENOID CONNECTION

PIN	SIGNAL	TECHNICAL SPECIFICATION	Connector code 666
1	**COIL**	Power supply	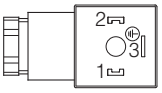
2	**COIL**	Power supply	
3	**GND**	Ground	

18 FASTENING BOLTS AND SEALS

	AGMZE-A-10	AGMZE-A-20	AGMZE-A-32
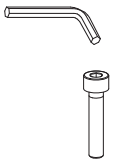	**Fastening bolts:** 4 socket head screws M12x35 class 12.9 Tightening torque = 125 Nm	**Fastening bolts:** 4 socket head screws M16x50 class 12.9 Tightening torque = 300 Nm	**Fastening bolts:** 4 socket head screws M20x60 class 12.9 Tightening torque = 600 Nm
	Seals: 2 OR 123 Diameter of ports P, T: Ø 14 mm 1 OR 109/70 Diameter of port X: Ø 3,2 mm	**Seals:** 2 OR 4112 Diameter of ports P, T: Ø 24 mm 1 OR 109/70 Diameter of port X: Ø 3,2 mm	**Seals:** 2 OR 4131 Diameter of ports P, T: Ø 28 mm 1 OR 109/70 Diameter of port X: Ø 3,2 mm

19 INSTALLATION DIMENSIONS [mm]

SIZE 10

ISO 6264: 2007
Mounting surface: 6264-06-09-1-97
(see table P005)

Mass [kg]	
AGMZE-A-10	5,4

AGMZE-A-10

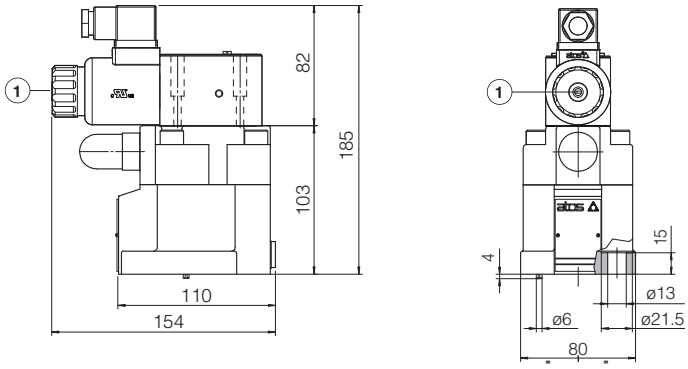

SIZE 20

ISO 6264: 2007
Mounting surface: 6264-08-13-1-97
(see table P005)

Mass [kg]	
AGMZE-A-20	6,6

AGMZE-A-20

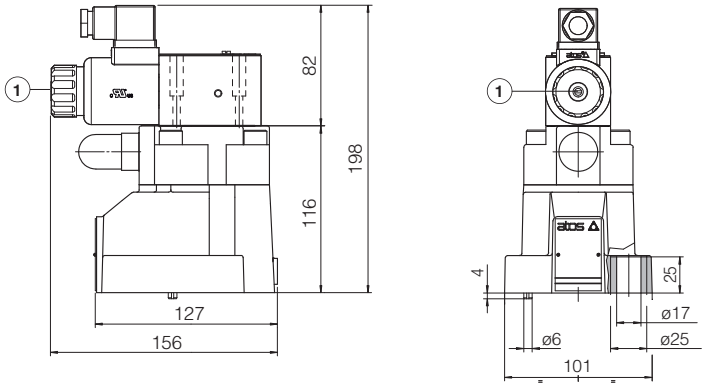

SIZE 32

ISO 6264: 2007
Mounting surface: 6264-10-17-1-97
(see table P005)
(with M20 fixing holes instead of standard M18)

Mass [kg]	
AGMZE-A-32	8

AGMZE-A-32

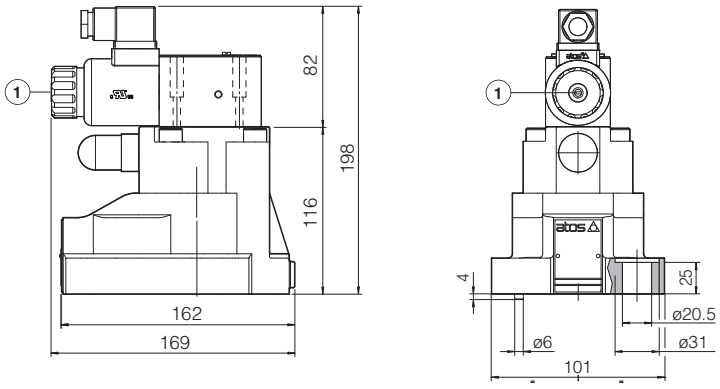

(1) = Air bleeding, see section 15

20 RELATED DOCUMENTATION

FS001	Basics for digital electrohydraulics	**GS050**	E-BM-AES digital driver
FS900	Operating and maintenance information for proportional valves	**GS500**	Programming tools
G010	E-MI-AC analog driver	**K800**	Electric and electronic connectors
G020	E-MI-AS-IR digital driver	**P005**	Mounting surfaces for electrohydraulic valves
G030	E-BM-AS digital driver		

Digital proportional reducing valves

direct, without transducer

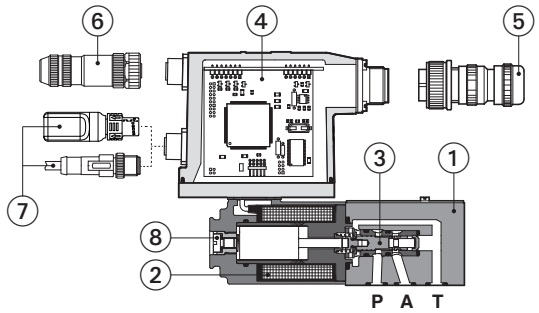

RZGO-AES-BC-010

① Valve body
② Proportional solenoid
③ Spool
④ On-board digital driver
⑤ Main connector
⑥ Fieldbus connector
⑦ Bluetooth/USB connection
⑧ Screw for air blending

RZGO-A , RZGO-AEB, RZGO-AES

Spool type, direct. digital proportional reducing valves for pressure open loop controls.

A to be coupled with off-board driver.

AEB basic execution, with on-board digital driver, with analog reference signal or IO-Link interface for digital reference signals, valve settings, and real-time diagnostics.

AES full execution, with on-board digital driver which includes also fieldbus interfaces for digital reference signals, valve settings, and real-time diagnostics.

For **AEB** and **AES**, Bluetooth/USB connection is always present for valve settings via mobile App and Atos PC software.

Size: **06** - ISO 4401
Max flow: **12 l/min**
Max pressure: **350 bar**

1 MODEL CODE

RZGO	-	AEB	-	NP	-	010	/	210	/	*	/	*	/	*	*	/	*

Proportional pressure reducing valve, direct

A = off-board driver, see section 3
AEB = basic on-board digital driver
AES = full on-board digital driver

IO-Link interface, only for AEB, see section 7 :
NP = Not present **IL** = IO-Link

Fieldbus interfaces, only for AES, see section 8 :
BC = CANopen **EH** = EtherCAT
BP = PROFIBUS DP

Configuration:
010 = regulation on port A, discharge in T (direct operated version)

Max regulated pressure:
32 = 32 bar **100** = 100 bar **210**= 210 bar

Electronic options, only for **AEB-NP** and **AES (1)**:
I = current reference input 4 ÷ 20 mA
Q = enable signal
Z = double power supply, enable, fault and monitor signals - 12 pin connector

Bluetooth option, only for **AEB** and **AES (1)**, see section 6 :
T = Bluetooth adapter supplied with the valve

Coil voltage, only for **A** - see section 16 :
- = standard coil for 24VDC Atos drivers
6 = optional coil for 12VDC Atos drivers
18 = optional coil for low current drivers

Series number

Seals material, see section 12 :
- = NBR
PE = FKM
BT = NBR low temp.

(1) Possible combined options: IQ, IZ (/T Bluetooth adapter option can be combined with all other options)

2 HYDRAULIC SYMBOLS

RZGO-A

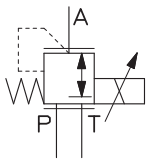

RZGO-AEB RZGO-AES

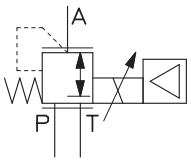

3 OFF-BOARD ELECTRONIC DRIVERS - only for **A**

Drivers model	E-MI-AC-01F		E-MI-AS-IR		E-BM-AS-PS		E-BM-AES
Type	Analog		Digital				
Voltage supply (VDC)	12	24	12	24	12	24	24
Valve coil option	/6	std	/6	std	/6	std	std
Format	plug-in to solenoid				DIN-rail panel		
Tech table	G010		G020		G030		GS050

4 GENERAL NOTES

Atos digital proportionals valves are CE marked according to the applicable directives (e.g. Immunity and Emission EMC Directive).
Installation, wirings and start-up procedures must be performed according to the general prescriptions shown in tech table **FS900** and in the user manuals included in the E-SW-SETUP programming software.

5 VALVE SETTINGS AND PROGRAMMING TOOLS - see tech. table **GS500**

5.1 Atos CONNECT mobile App

Free downloadable App for smartphones and tablets which allows quick access to valve main functional parameters and basic diagnostic information via Bluetooth, thus avoiding physical cable connection and significantly reducing commissioning time.
Atos CONNECT supports Atos digital valve drivers equipped with E-A-BTH adapter or with built-in Bluetooth. It does not support valves with p/Q control or axis controls.

Download on the App Store

GET IT ON Google Play

5.2 E-SW-SETUP PC software

Free downloadable software for PC allows to set all valve functional parameters and to access complete diagnostic information of digital valve drivers via Bluetooth/USB service port.
Atos E-SW-SETUP PC software supports all Atos digital valve drivers and it is available at www.atos.com in MyAtos area.

WARNING: drivers USB port is not isolated! For E-C-SB-USB/M12 cable, the use of E-A-SB-USB/OPT isolator adapter is highly recommended for PC protection

Bluetooth or USB connection

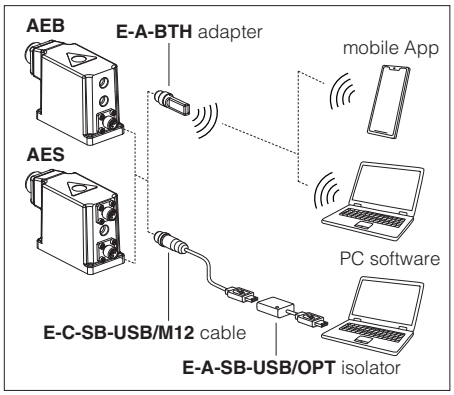

6 BLUETOOTH OPTION - see tech. table **GS500**

T option adds Bluetooth® connectivity to Atos valve drivers thanks to E-A-BTH adapter, which can be left permanently installed on-board, to allow the Bluetooth connection with the valve drivers at any time. E-A-BTH adapter can also be purchased separately and used to connect with any supported Atos digital product.
Bluetooth connection to the valve can be protected against unauthorised access by setting a personal password. The adapter leds visually indicates the status of valve driver and Bluetooth connection.

WARNING: for the list of countries where the Bluetooth adapter has been approved, see tech. table **GS500**
T option is not available for the Indian market, so the Bluetooth adapter must be ordered separately.

7 IO-LINK - only for **AEB**, see tech. table **GS520**

IO-Link allows low cost digital communication between the valve and machine central unit. The valve is directly connected to a port of an IO-Link master (point-to-point connection) via low-cost unshielded cables for digital reference, diagnostic and settings. The IO-Link master works as a hub exchanging this information with the machine central unit via fieldbus.

8 FIELDBUS - only for **AES**, see tech. table **GS510**

Fieldbus allows valve direct communication with machine control unit for digital reference, valve diagnostics and settings. These execution allow to operate the valves through fieldbus or analog signals available on the main connector.

9 GENERAL CHARACTERISTICS

Assembly position	Any position
Subplate surface finishing to ISO 4401	Acceptable roughness index: Ra ≤ 0,8, recommended Ra 0,4 – Flatness ratio 0,01/100
MTTFd valves according to EN ISO 13849	150 years, for further details see technical table P007
Ambient temperature range	**A:** **Standard** = -20°C ÷ +70°C **/PE** option = -20°C ÷ +70°C **/BT** option = -40°C ÷ +60°C **AEB, AES:** **Standard** = -20°C ÷ +60°C **/PE** option = -20°C ÷ +60°C **/BT** option = -40°C ÷ +60°C
Storage temperature range	**A:** **Standard** = -20°C ÷ +80°C **/PE** option = -20°C ÷ +80°C **/BT** option = -40°C ÷ +70°C **AEB, AES:** **Standard** = -20°C ÷ +70°C **/PE** option = -20°C ÷ +70°C **/BT** option = -40°C ÷ +70°C
Surface protection	Zinc coating with black passivation, galvanic treatment (driver housing for AEB and AES)
Corrosion resistance	Salt spray test (EN ISO 9227) > 200 h
Vibration resistance	See technical table G004 (for AEB and AES)
Compliance	CE according to EMC directive 2014/30/EU (Immunity: EN 61000-6-2; Emission: EN 61000-6-3) RoHS Directive 2011/65/EU as last update by 2015/863/EU REACH Regulation (EC) n°1907/2006

10 HYDRAULIC CHARACTERISTICS - based on mineral oil ISO VG 46 at 50 °C

Valve model		RZGO-*-010
Max regulated pressure	[bar]	32; 100; 210
Max pressure at port P	[bar]	350
Max pressure at port T	[bar]	210
Min regulated pressure **(1)**	[bar]	0,8
Max flow	[l/min]	12
Response time 0-100% step signal (depending on installation) **(2)**	[ms]	≤ 45
Hysteresis		≤ 1,5 [% of max pressure]
Linearity		≤ 3,0 [% of max pressure]
Repeatability		≤ 2,0 [% of max pressure]

Note: above performance data refer to valves coupled with Atos electronic drivers, see section 3

(1) Min pressure value to be increased of T line pressure
(2) Average response time value; the pressure variation in consequence of a modification of the reference input signal to the valve is affected by the stiffness of the hydraulic circuit: greater is the stiffness of the circuit, faster is the dynamic response

11 ELECTRICAL CHARACTERISTICS

Power supplies	Nominal : +24 VDC Rectified and filtered : VRMS = 20 ÷ 32 VMAX (ripple max 10 % VPP)				
Max power consumption	**A** = 30 W **AEB**, **AES** = 50 W				
Coil voltage code	standard		option /6		option /18
Max. solenoid current	2,4 A 1,8 A for /32 - max pressure 32 bar		3 A 2,25 A for /32 - max pressure 32 bar		1 A 0,8 A for /32 - max pressure 32 bar
Coil resistance R at 20°C	3 ÷ 3,3 Ω		2 ÷ 2,2 Ω		13 ÷ 13,4 Ω
Analog input signals	Voltage: range ±10 VDC (24 VMAX tolerant) Input impedance: Ri > 50 kΩ Current: range ±20 mA Input impedance: Ri = 500 Ω				
Monitor output	Output range: voltage ±5 VDC @ max 5 mA				
Enable input	Range: 0 ÷ 9 VDC (OFF state), 15 ÷ 24 VDC (ON state), 9 ÷ 15 VDC (not accepted); Input impedance: Ri > 87 kΩ				
Fault output	Output range : 0 ÷ 24 VDC (ON state ≅ VL+ [logic power supply] ; OFF state ≅ 0 V) @ max 50 mA; external negative voltage not allowed (e.g. due to inductive loads)				
Alarms	Solenoid not connected/short circuit, cable break with current reference signal, over/under temperature, current control monitoring, power supplies level				
Insulation class	H (180°) Due to the occurring surface temperatures of the solenoid coils, the European standards ISO 13732-1 and EN982 must be taken into account				
Protection degree to DIN EN60529	**A** = IP65; **AEB**, **AES** = IP66 / IP67 with mating connectors				
Duty factor	Continuous rating (ED=100%)				
Tropicalization	Tropical coating on electronics PCB				
Additional characteristics	Short circuit protection of solenoid's current supply; current control by P.I.D. with rapid solenoid switching; protection against reverse polarity of power supply				
Communication interface	USB Atos ASCII coding	IO-Link Interface and System Specification 1.1.3	CANopen EN50325-4 + DS408	PROFIBUS DP EN50170-2/IEC61158	EtherCAT IEC 61158
Communication physical layer	not insulated USB 2.0+USB OTG	SDCI class port B	optical insulated CAN ISO11898	optical insulated RS485	Fast Ethernet, insulated 100 Base TX
Recommended wiring cable	LiYCY shielded cables, see section 21				

Note: a maximum time of 500 ms (depending on communication type) has to be considered between the driver energizing with the 24 VDC power supply and when the valve is ready to operate. During this time the current to the valve coils is switched to zero.

12 SEALS AND HYDRAULIC FLUIDS - for other fluids not included in below table, consult our technical office

Seals, recommended fluid temperature		NBR seals (standard) = -20°C ÷ +60°C (+80°C for **A**), with HFC hydraulic fluids = -20°C ÷ +50°C FKM seals (/PE option) = -20°C ÷ +80°C NBR low temp. seals (/BT option) = -40°C ÷ +60°C, with HFC hydraulic fluids = -20°C ÷ +50°C		
Recommended viscosity		20 ÷ 100 mm²/s - max allowed range 15 ÷ 380 mm²/s		
Max fluid contamination level	normal operation	ISO4406 class 18/16/13 NAS1638 class 7		see also filter section at www.atos.com or KTF catalog
	longer life	ISO4406 class 16/14/11 NAS1638 class 5		
Hydraulic fluid		**Suitable seals type**	**Classification**	**Ref. Standard**
Mineral oils		NBR, FKM, NBR low temp.	HL, HLP, HLPD, HVLP, HVLPD	DIN 51524
Flame resistant without water		FKM	HFDU, HFDR	ISO 12922
Flame resistant with water		NBR, NBR low temp.	HFC	

13 DIAGRAMS (based on mineral oil ISO VG 46 at 50 °C)

1 Regulation diagrams
with flow rate Q = 1 l/min

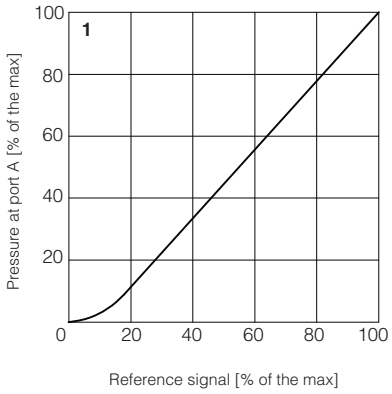

2 Pressure/flow diagrams
with reference signal set at Q = 1 l/min

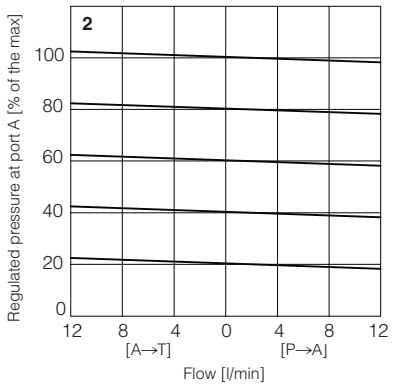

3-4 Min. pressure/flow diagrams
with zero reference signal

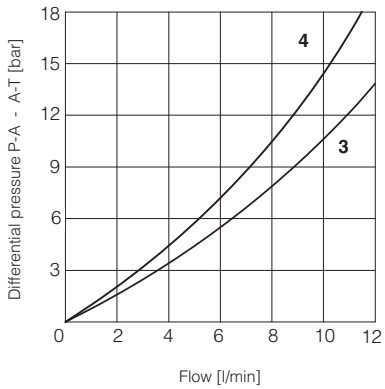

3 = Pressure drops vs. flow P→A
4 = Pressure drops vs. flow A→T

14 ELECTRONIC OPTIONS - only for **AEB-NP** and **AES**

I = This option provides 4 ÷ 20 mA current reference, instead of the standard 0 ÷ 10 VDC.
Input signal can be reconfigured via software selecting between voltage and current, within a maximum range of ±10 VDC or ±20 mA.
It is normally used in case of long distance between the machine control unit and the valve or where the reference signal can be affected by electrical noise; the valve functioning is disabled in case of reference signal cable breakage.

Q = This option permits to inhibit the valve function without removing the power supply to the driver. Upon disable command the current to the solenoid is zeroed and the valve's spool moves to rest position.
The option /Q is suggested for all cases where the valve has to be frequently inhibited during the machine cycle – see 18.5 for signal specifications.

Z = This option provides, on the 12 pin main connector, the following additional features:
Fault output signal - see 18.6
Enable input signal - see above option /Q
Power supply for driver's logics and communication - see 18.2

15 POSSIBLE COMBINED OPTIONS

Electronic options: /IQ, /IZ

Note: **/T** Bluetooth adapter option can be combined with all other options

16 COIL VOLTAGE OPTIONS - only for **A**

6 = Optional coil to be used with Atos drivers with power supply 12 VDC.
18 = Optional coil to be used with electronic drivers not supplied by Atos.

17 AIR BLEEDING

At the first valve commissioning the air eventually trapped inside the solenoid must be bled-off through the screw ① located at the rear side of the solenoid housing.
The presence of air may cause pressure instability and vibrations.

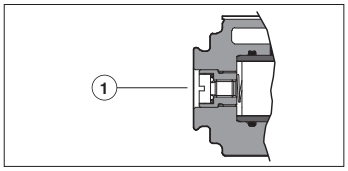

18 POWER SUPPLY AND SIGNALS SPECIFICATIONS - only for **AEB-NP** and **AES**

Generic electrical output signals of the valve (e.g. fault or monitor signals) must not be directly used to activate safety functions, like to switch-ON/OFF the machine's safety components, as prescribed by the European standards (Safety requirements of fluid technology systems and components-hydraulics, ISO 4413).

For **AEB-IL** signals see section 19

18.1 Power supply (V+ and V0)

The power supply must be appropriately stabilized or rectified and filtered: apply at least a 10000 μF/40 V capacitance to single phase rectifiers or a 4700 μF/40 V capacitance to three phase rectifiers. In case of separate power supply see 18.2.

⚠ A safety fuse is required in series to each power supply: 2,5 A time lag fuse.

18.2 Power supply for driver's logic and communication (VL+ and VL0) - only for **/Z** option

The power supply for driver's logic and communication must be appropriately stabilized or rectified and filtered: apply at least a 10000 μF/40 V capacitance to single phase rectifiers or a 4700 μF/40 V capacitance to three phase rectifiers.
The separate power supply for driver's logic on pin 9 and 10, allow to remove solenoid power supply from pin 1 and 2 maintaining active the diagnostics, USB and fieldbus communications.

⚠ A safety fuse is required in series to each driver's logic and communication power supply: 500 mA fast fuse.

18.3 Reference input signal (INPUT+)

The driver controls in closed loop the current to the valve proportionally to the external reference input signal.
Reference input signal is factory preset according to selected valve code, defaults are 0 ÷ 10 VDC for standard and 4 ÷ 20 mA for /I option.
Input signal can be reconfigured via software selecting between voltage and current, within a maximum range of ±10 VDC or ± 20 mA.
Drivers with fieldbus interface (BC, BP, EH) can be software set to receive reference signal directly from the machine control unit (fieldbus reference). Analog reference input signal can be used as on-off commands with input range 0 ÷ 24VDC.

18.4 Monitor output signal (MONITOR)

The driver generates an analog output signal (MONITOR) proportional to the actual coil current of the valve; the monitor output signal can be software set to show other signals available in the driver (e.g. analog reference, fieldbus reference).
Monitor output signal is factory preset according to selected valve code, default settings is 0 ÷ 5 VDC (1V = 1A).
Output signal can be reconfigured via software, within a maximum range of ±5 VDC.

18.5 Enable input signal (ENABLE) - not for standard

To enable the driver, supply a 24 VDC on pin 3 (pin C): Enable input signal allows to enable/disable the current supply to the solenoid, without removing the electrical power supply to the driver; it is used to active the communication and the other driver functions when the valve must be disabled for safety reasons. This condition **does not comply** with norms IEC 61508 and ISO 13849.
Enable input signal can be used as generic digital input by software selection.

18.6 Fault output signal (FAULT) - only for **/Z** option

Fault output signal indicates fault conditions of the driver (solenoid short circuits/not connected, reference signal broken for 4 ÷ 20 mA input, etc.).
Fault presence corresponds to 0 VDC, normal working corresponds to 24 VDC.
Fault status is not affected by the Enable input signal.

19 IO-LINK SIGNALS SPECIFICATIONS - only for **AEB-IL**

19.1 Power supply for IO-Link communication (L+ and L-)

The IO-Link master provides dedicated 24 VDC power supply for IO-Link communication.
Maximum power consumption: 2 W
Internal electrical isolation of power L+, L- from P24, N24

19.2 Power supply for driver's logic and valve regulation (P24 and N24)

The IO-Link master provides dedicated 24 VDC power supply for valve regulation, logics and diagnostics.
Maximum power consumption: 50 W
Internal electrical isolation of power P24, N24 from L+, L-

19.3 IO-Link data line (C/Q)

C/Q signal is used to establish communication between IO-Link master and valve.

20 ELECTRONIC CONNECTIONS

20.1 Main connector signals - 7 pin (A1) Standard and /Q option - for AEB-NP and AES

PIN	Standard	/Q	TECHNICAL SPECIFICATIONS	NOTES
A	**V+**		Power supply 24 VDC	Input - power supply
B	**V0**		Power supply 0 VDC	Gnd - power supply
C	**AGND**		Analog ground	Gnd - analog signal
		ENABLE	Enable (24 VDC) or disable (0 VDC) the driver, referred to V0	Input - on/off signal
D	**INPUT+**		Reference input signal: ±10 VDC / ±20 mA maximum range Defaults are 0 ÷ 10 VDC for standard and 4 ÷ 20 mA for /I option	Input - analog signal **Software selectable**
E	**INPUT-**		Negative reference input signal for INPUT+	Input - analog signal
F	**MONITOR** referred to: AGND | V0		Monitor output signal: ±5 VDC maximum range Default is 0 ÷ 5 VDC (1V = 1A)	Output - analog signal **Software selectable**
G	**EARTH**		Internally connected to driver housing	

20.2 Main connector signals - 12 pin (A2) /Z option - for AEB-NP and AES

PIN	/Z	TECHNICAL SPECIFICATIONS	NOTES
1	**V+**	Power supply 24 VDC	Input - power supply
2	**V0**	Power supply 0 VDC	Gnd - power supply
3	**ENABLE**	Enable (24 VDC) or disable (0 VDC) the driver, referred to VL0	Input - on/off signal
4	**INPUT+**	Reference input signal: ±10 VDC / ±20 mA maximum range Defaults are 0 ÷ 10 VDC for standard and 4 ÷ 20 mA for /I option	Input - analog signal **Software selectable**
5	**INPUT-**	Negative reference input signal for INPUT+	Input - analog signal
6	**MONITOR**	Monitor output signal: ±5 VDC maximum range, referred to VL0 Default is 0 ÷ 5 VDC (1V = 1A)	Output - analog signal **Software selectable**
7	**NC**	Do not connect	
8	**NC**	Do not connect	
9	**VL+**	Power supply 24 VDC for driver's logic and communication	Input - power supply
10	**VL0**	Power supply 0 VDC for driver's logic and communication	Gnd - power supply
11	**FAULT**	Fault (0 VDC) or normal working (24 VDC), referred to VL0	Output - on/off signal
PE	**EARTH**	Internally connected to driver housing	

Note: do not disconnect VL0 before VL+ when the driver is connected to PC USB port

20.3 IO-Link connector signals - M12 - 5 pin - Coding A, port class B (A) only for AEB-IL

PIN	SIGNAL	TECHNICAL SPECIFICATIONS	NOTES
1	**L+**	Power supply 24 VDC for IO-Link communication	Input - power supply
2	**P24**	Power supply 24 VDC for valve regulation, logics and diagnostics	Input - power supply
3	**L-**	Power supply 0 VDC for IO-Link communication	Gnd - power supply
4	**C/Q**	IO-Link data line	Input / Output - signal
5	**N24**	Power supply 0 VDC for valve regulation, logics and diagnostics	Gnd - power supply

Note: L+, L- and P24, N24 are electrically isolated

20.4 Communication connectors - for AEB (B) and AES (B) - (C)

(B) USB connector - M12 - 5 pin always present		
PIN	**SIGNAL**	**TECHNICAL SPECIFICATION (1)**
1	**+5V_USB**	Power supply
2	**ID**	Identification
3	**GND_USB**	Signal zero data line
4	**D-**	Data line -
5	**D+**	Data line +

(C1) BC fieldbus execution, connector - M12 - 5 pin (2)		
PIN	**SIGNAL**	**TECHNICAL SPECIFICATION (1)**
1	**CAN_SHLD**	Shield
2	**NC**	do not connect
3	**CAN_GND**	Signal zero data line
4	**CAN_H**	Bus line (high)
5	**CAN_L**	Bus line (low)

(C2) BP fieldbus execution, connector - M12 - 5 pin (2)		
PIN	**SIGNAL**	**TECHNICAL SPECIFICATION (1)**
1	**+5V**	Termination supply signal
2	**LINE-A**	Bus line (high)
3	**DGND**	Data line and termination signal zero
4	**LINE-B**	Bus line (low)
5	**SHIELD**	

(1) Shield connection on connector's housing is recommended

(C3) (C4) EH fieldbus execution, connector - M12 - 4 pin (2)		
PIN	**SIGNAL**	**TECHNICAL SPECIFICATION (1)**
1	**TX+**	Transmitter
2	**RX+**	Receiver
3	**TX-**	Transmitter
4	**RX-**	Receiver
Housing	**SHIELD**	

(2) Only for **AES** execution

20.5 Solenoid connection - only for A

PIN	SIGNAL	TECHNICAL SPECIFICATION	Connector code 666
1	**COIL**	Power supply	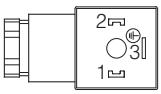
2	**COIL**	Power supply	
3	**GND**	Ground	

20.6 AEB-NP connections layout

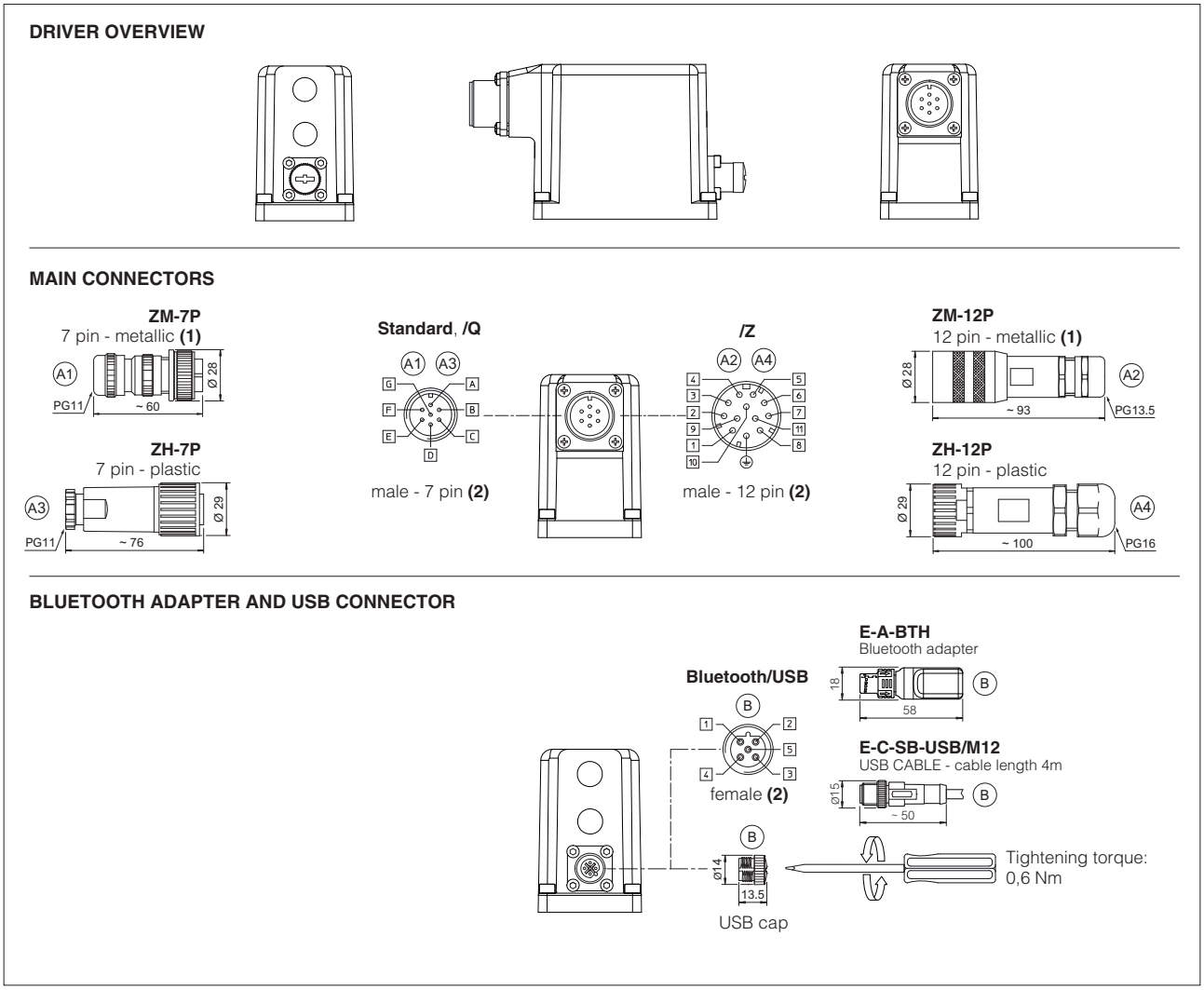

(1) Use of metallic connectors is strongly recommended in order to fulfill EMC requirements **(2)** Pin layout always referred to driver's view

20.7 AEB-IL connections layout

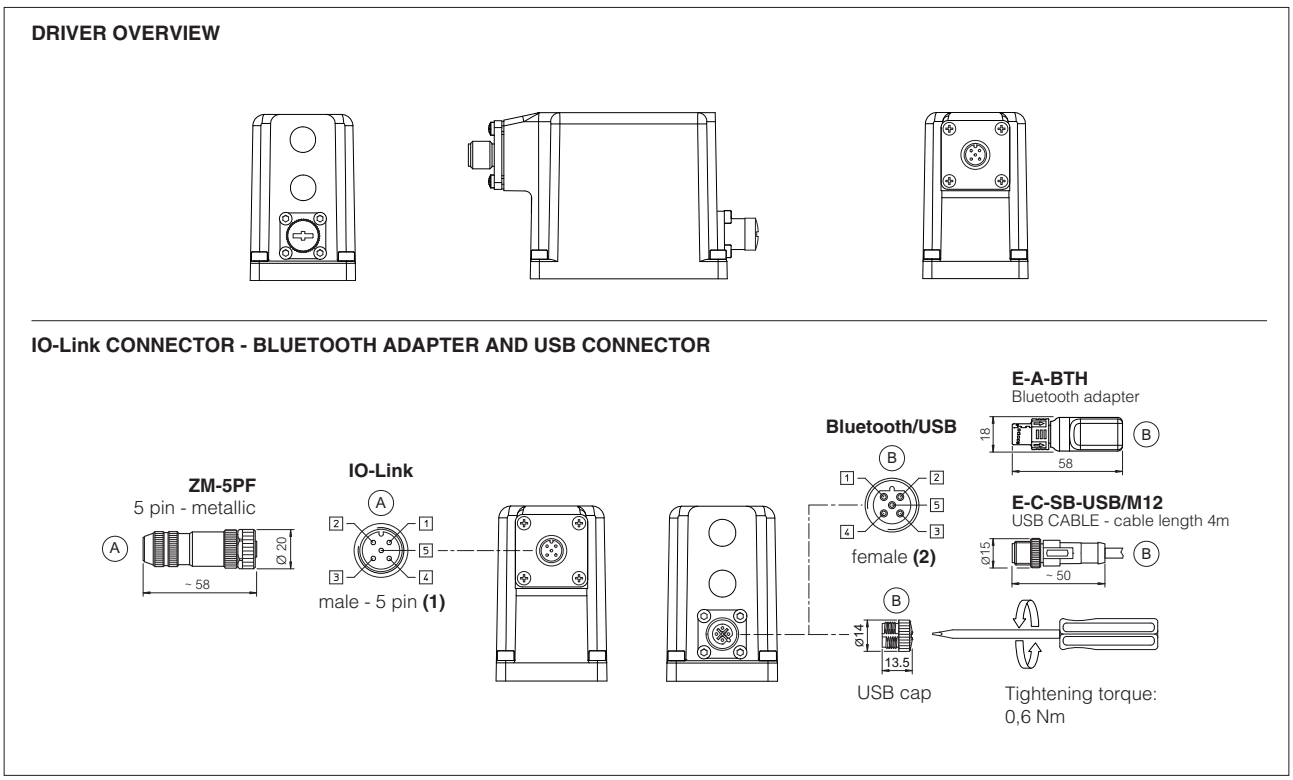

(1) Use of metallic connectors is strongly recommended in order to fulfill EMC requirements **(2)** Pin layout always referred to driver's view

20.8 AES connections layout

DRIVER OVERVIEW

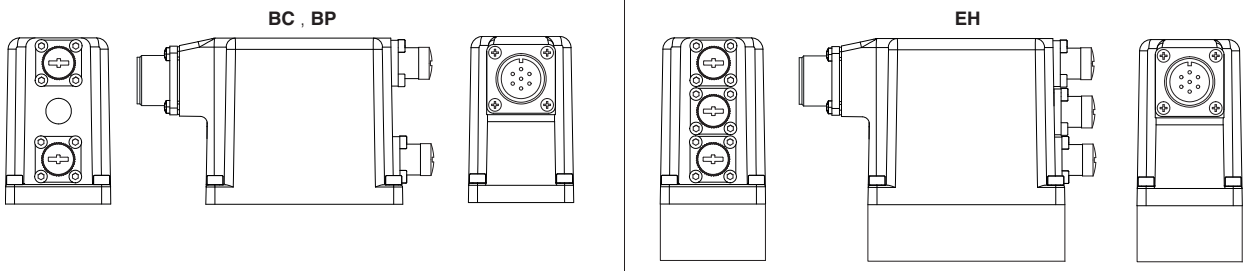

MAIN CONNECTORS

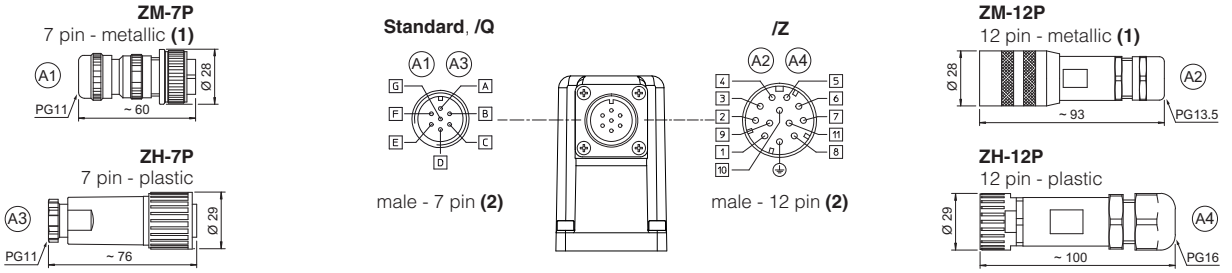

FIELDBUS CONNECTORS

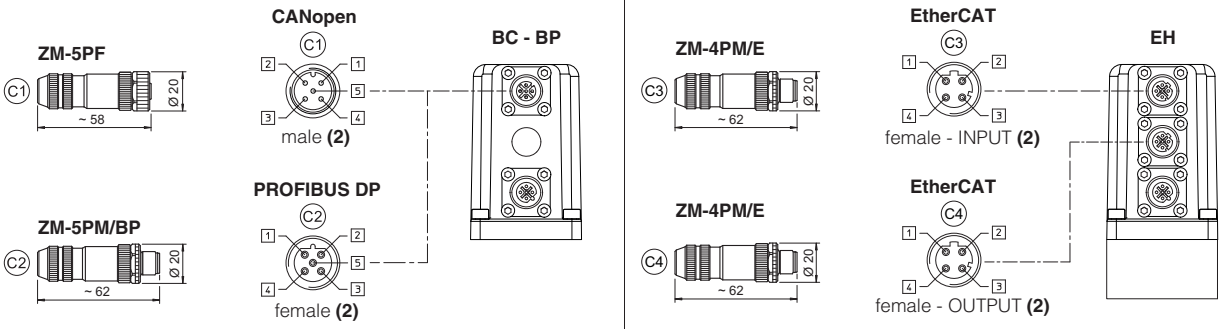

BLUETOOTH ADAPTER AND USB CONNECTOR

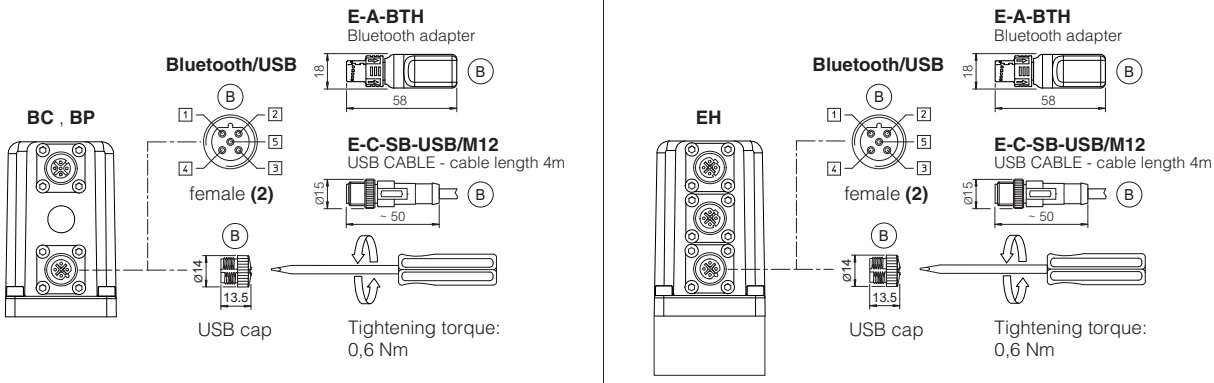

(1) Use of metallic connectors is strongly recommended in order to fulfill EMC requirements **(2)** Pin layout always referred to driver's view

21 CONNECTORS CHARACTERISTICS - to be ordered separately

21.1 Main connectors - 7 pin - for **AEB-NP** and **AES**

CONNECTOR TYPE	POWER SUPPLY AND SIGNALS	POWER SUPPLY AND SIGNALS
CODE	(A1) ZM-7P	(A3) ZH-7P
Type	7pin female straight circular	7pin female straight circular
Standard	According to MIL-C-5015	According to MIL-C-5015
Material	Metallic	Plastic reinforced with fiber glass
Cable gland	PG11	PG11
Recommended cable	LiYCY 7 x 0,75 mm² max 20 m (logic and power supply) or LiYCY 7 x 1 mm² max 40 m (logic and power supply)	LiYCY 7 x 0,75 mm² max 20 m (logic and power supply) or LiYCY 7 x 1 mm² max 40 m (logic and power supply)
Conductor size	up to 1 mm² - available for 7 wires	up to 1 mm² - available for 7 wires
Connection type	to solder	to solder
Protection (EN 60529)	IP 67	IP 67

21.2 Main connectors - 12 pin - for **AEB-NP** and **AES**

CONNECTOR TYPE	POWER SUPPLY AND SIGNALS	POWER SUPPLY AND SIGNALS
CODE	(A2) ZM-12P	(A4) ZH-12P
Type	12pin female straight circular	12pin female straight circular
Standard	DIN 43651	DIN 43651
Material	Metallic	Plastic reinforced with fiber glass
Cable gland	PG13,5	PG16
Recommended cable	LiYCY 12 x 0,75 mm² max 20 m (logic and power supply)	LiYCY 10 x 0,14mm² max 40 m (logic) LiYY 3 x 1mm² max 40 m (power supply)
Conductor size	0,5 mm² to 1,5 mm² - available for 12 wires	0,14 mm² to 0,5 mm² - available for 9 wires 0,5 mm² to 1,5 mm² - available for 3 wires
Connection type	to crimp	to crimp
Protection (EN 60529)	IP 67	IP 67

21.3 IO-Link connector - only for **AEB-IL**

CONNECTOR TYPE	IL IO-Link
CODE	(A) ZM-5PF
Type	5pin female straight circular
Standard	M12 coding A – IEC 61076-2-101
Material	Metallic
Cable gland	Pressure nut - cable diameter 6÷8 mm
Recommended cable	5 x 0,75 mm² max 20 m
Connection type	screw terminal
Protection (EN 60529)	IP 67

21.4 Fieldbus communication connectors - only for **AES**

CONNECTOR TYPE	BC CANopen (1)		BP PROFIBUS DP (1)		EH EtherCAT (2)
CODE	(C1) ZM-5PF	(C2) ZM-5PM	(C1) ZM-5PF/BP	(C2) ZM-5PM/BP	(C1) (C2) ZM-4PM/E
Type	5 pin female straight circular	5 pin male straight circular	5 pin female straight circular	5 pin male straight circular	4 pin male straight circular
Standard	M12 coding A – IEC 61076-2-101		M12 coding B – IEC 61076-2-101		M12 coding D – IEC 61076-2-101
Material	Metallic		Metallic		Metallic
Cable gland	Pressure nut - cable diameter 6÷8 mm		Pressure nut - cable diameter 6÷8 mm		Pressure nut - cable diameter 4÷8 mm
Cable	CANbus Standard (DR 303-1)		PROFIBUS DP Standard		Ethernet standard CAT-5
Connection type	screw terminal		screw terminal		terminal block
Protection (EN 60529)	IP67		IP 67		IP 67

(1) E-TRM-** terminators can be ordered separately - see tech table **GS500**

(2) Internally terminated

22 FASTENING BOLTS AND SEALS

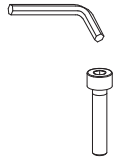	**Fastening bolts:** 4 socket head screws M5x50 class 12.9 Tightening torque = 8 Nm
	Seals: 4 OR 108 Diameter of ports P, A, T: Ø 5 mm Port B not used

23 INSTALLATION DIMENSIONS [mm]

ISO 4401: 2005
Mounting surface: 4401-03-02-0-05 (see table P005)

Mass [kg]		
A	**AEB, AES**	**AES-EH**
1,8	2,3	2,4

RZGO-A

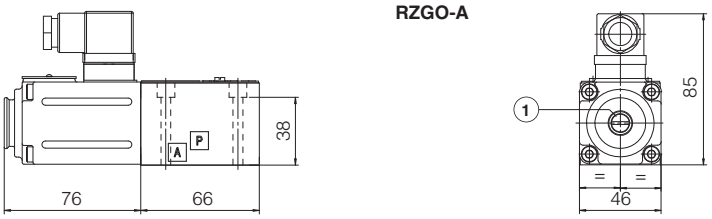

RZGO-AEB-NP
RZGO-AEB-IL

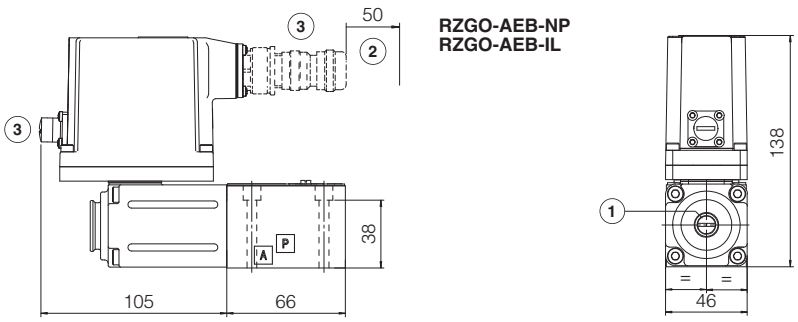

RZGO-AES-BP
RZGO-AES-BC

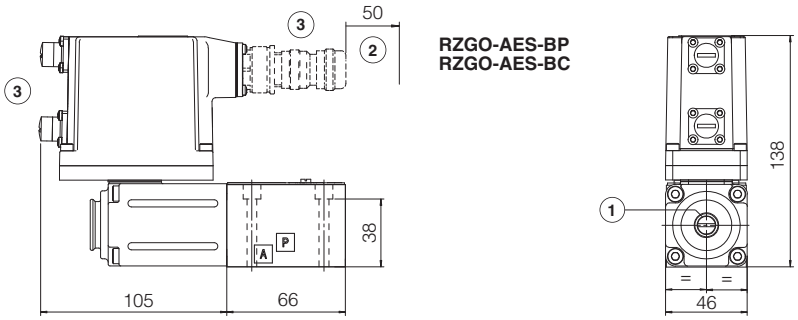

RZGO-AES-EH

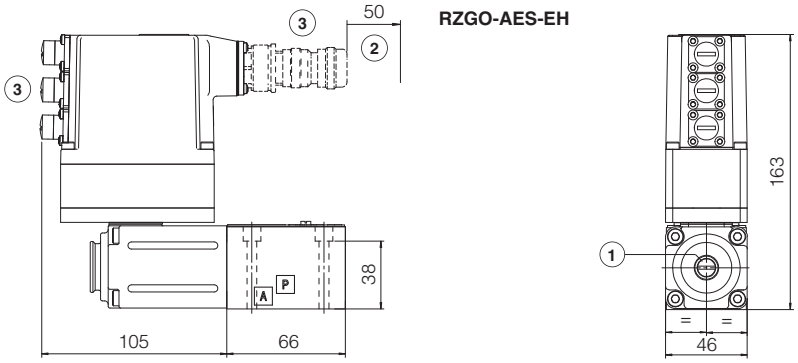

(1) = Air bleeding, see section 17
(2) = Space required for connection cable and for connector removal
(3) = The dimensions of connectors and Bluetooth adapter must be considered, see section 20.6, 20.7 and 20.8

24 RELATED DOCUMENTATION

FS001	Basics for digital electrohydraulics	**K800**	Electric and electronic connectors
FS900	Operating and maintenance information for proportional valves	**P005**	Mounting surfaces for electrohydraulic valves
G010	E-MI-AC analog driver	**QB200**	Quickstart for AEB valves commissioning
G020	E-MI-AS-IR digital driver	**QF200**	Quickstart for AES valves commissioning
G030	E-BM-AS digital driver	**E-MAN-MI-AS**	E-MI-AS-IR user manual (off-board)
GS050	E-BM-AES digital driver	**E-MAN-BM-AS**	E-BM-AS user manual (off-board)
GS500	Programming tools	**E-MAN-BM-AES**	E-BM-AES user manual (off-board)
GS510	Fieldbus	**E-MAN-RI-AEB**	AEB user manual
GS520	IO-Link interface	**E-MAN-RI-AES**	AES user manual

Proportional reducing valves

direct, without transducer

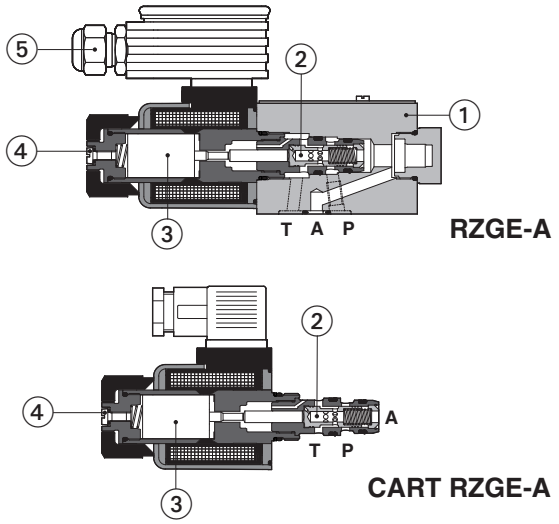

① Valve body
② Poppet
③ Proportional solenoid
④ Screw for air bleeding
⑤ E-MI-AS-IR digital driver (to be ordered separately)

RZGE-A, CART RZGE-A

Poppet type, direct, proportional pressure reducing valves for open loop pressure controls.

They operate in association with off-board driver, which supply the proportional valves with proper current to align the valve regulation to the reference signal supplied to the driver.

They are available in following executions:

RZGE: subplate mounting, ISO size 06
CART RZGE: M20 cartridge execution

The solenoids are certified according to North American standard **cURus**.

Size: **06** - ISO 4401 (RZGE); **M20** (CART RZGE)
Max flow: **12 l/min**
Max pressure: **315 bar**
Max regulated pressure: **210 bar**

For cavity CART RZGE see section 16

1 MODEL CODE

RZGE	-	A	-	010	/	210	-	*	/	*	*	/	*

Proportional pressure reducing valve, direct
RZGE = subplate mounting
CART RZGE = cartridge execution

A = for off-board driver, see section 3

Configuration:
010 = reduced pressure on port A

Max regulated pressure:
32 = 32 bar
100 = 100 bar
210 = 210 bar

Coil with special connectors, see section 12 :
- = omit for standard DIN connector
J = AMP Junior Timer connector
K = Deutsch connector
S = Lead Wire connection

Coil voltage, see section 10 :
- = standard coil for 24 VDC Atos drivers
6 = optional coil for 12 VDC Atos drivers
18 = optional coil for low current drivers **(1)**

Series number

Seals material,
see section 8 :
- = NBR
PE = FKM
BT = HNBR

(1) Select valve's coil voltage **/18** in case of electronic drivers not supplied by Atos, with power supply 24 VDC and with max current limited to 1,2A

2 HYDRAULIC SYMBOL

RZGE-A
CART RZGE-A

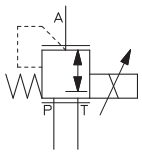

3 OFF-BOARD ELECTRONIC DRIVERS

Drivers model	E-MI-AC-01F **(1)**		E-MI-AS-IR **(1)**		E-BM-AS-PS		E-BM-AES
Type	Analog		Digital				
Voltage supply (VDC)	12	24	12	24	12	24	24
Valve coil option	/6	std	/6	std	/6	std	std
Format	plug-in to solenoid				DIN-rail panel		
Tech table	G010		G020		G030		GS050

(1) For **CART RZGE** the electronic driver may interfere with the manifold surface.
Please check the installation dimensions at section 16

4 GENERAL NOTES

Atos digital proportionals valves are CE marked according to the applicable directives (e.g. Immunity and Emission EMC Directive).
Installation, wirings and start-up procedures must be performed according to the general prescriptions shown in tech table **FS900** and in the installation notes supply with relevant components.

5 GENERAL CHARACTERISTICS

Assembly position	Any position
Subplate surface finishing to ISO 4401	Acceptable roughness index: Ra ≤ 0,8, recommended Ra 0,4 – Flatness ratio 0,01/100
MTTFd valves according to EN ISO 13849	150 years, see technical table P007
Ambient temperature range	**Standard** = -20°C ÷ +70°C **/PE** option = -20°C ÷ +70°C **/BT** option = -40°C ÷ +60°C
Storage temperature range	**Standard** = -20°C ÷ +80°C **/PE** option = -20°C ÷ +80°C **/BT** option = -40°C ÷ +70°C
Surface protection	Zinc coating with black passivation
Corrosion resistance	Salt spray test (EN ISO 9227) > 200 h
Compliance	CE according to EMC directive 2014/30/EU (Immunity: EN 61000-6-2; Emission: EN 61000-6-3) RoHS Directive 2011/65/EU as last update by 2015/863/EU REACH Regulation (EC) n°1907/2006

6 HYDRAULIC CHARACTERISTICS

Valve model	**RZGE-A-010**
Max regulated pressure	32; 100; 210
Min. regulated pressure [bar]	0,8 (or actual value at T port)
Max. pressure at port P [bar]	315
Max. pressure at port T [bar]	210
Max. flow [l/min]	12
Internal leakage [cm³/min]	50 bar = 320; 100 bar =340; 210 bar =550
Response time 0-100% step signal **(1)** (depending on installation) [bar]	≤ 70
Hysteresis [% of the max pressure]	≤ 1,5
Linearity [% of the max pressure]	≤ 5
Repeatability [% of the max pressure]	≤ 2

Note: above performance data refer to valves coupled with Atos electronic drivers, see section 3

(1) Average response time values; the pressure variation in consequence of a modification of the reference input signal to the valve is affected by the stiffness of the hydraulic circuit: greater is the stiffness of the circuit, faster is the dynamic response

7 ELECTRICAL CHARACTERISTICS

Coil voltage code	**Standard** standard coil to be used with Atos drivers with power supply 24VDC	option **/6** optional coil to be used with Atos drivers with power supply 12 VDC	option **/18** optional coil to be used with electronic drivers not supplied by Atos, with power supply 24 VDC and max current limited to 1,2 A
Max. solenoid current	2,5 A	3 A	1,2 A
Coil resistance R at 20°C	3,1 Ω	2,1 Ω	13,1 Ω
Insulation class	H (180°) Due to the occurring surface temperatures of the solenoid coils, the European standards ISO 13732-1 and EN982 must be taken into account		
Protection degree to DIN EN60529	**IP 65** (with connectors 666 correctly assembled)		
Duty factor	Continuous rating (ED=100%)		
Coil certification	**cURus** North American Standards		

8 SEALS AND HYDRAULIC FLUIDS - for other fluids not included in below table, consult our technical office

Seals, recommended fluid temperature	NBR seals (standard) = -20°C ÷ +80°C, with HFC hydraulic fluids = -20°C ÷ +50°C FKM seals (/PE option) = -20°C ÷ +80°C HNBR seals (/BT option) = -40°C ÷ +60°C, with HFC hydraulic fluids = -40°C ÷ +50°C		
Recommended viscosity	20 ÷ 100 mm²/s - max allowed range 15 ÷ 380 mm²/s		
Max fluid contamination level — normal operation	ISO4406 class 18/16/13 NAS1638 class 7		see also filter section at www.atos.com or KTF catalog
Max fluid contamination level — longer life	ISO4406 class 16/14/11 NAS1638 class 5		
Hydraulic fluid	**Suitable seals type**	**Classification**	**Ref. Standard**
Mineral oils	NBR, FKM, HNBR	HL, HLP, HLPD, HVLP, HVLPD	DIN 51524
Flame resistant without water	FKM	HFDU, HFDR	ISO 12922
Flame resistant with water	NBR, HNBR	HFC	

9 DIAGRAMS (based on mineral oil ISO VG 46 at 50 °C)

1 = Regulation diagrams
with flow rate Q = 1 l/min

Note: the presence of counter pressure at port T can affect the effective pressure regulation

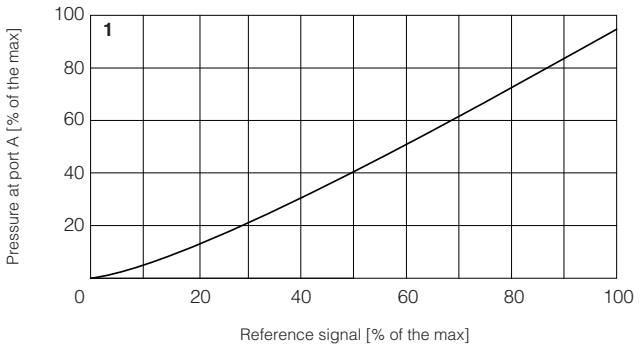

2 = Pressure/flow diagrams
with reference signal set at Q = 1 l/min

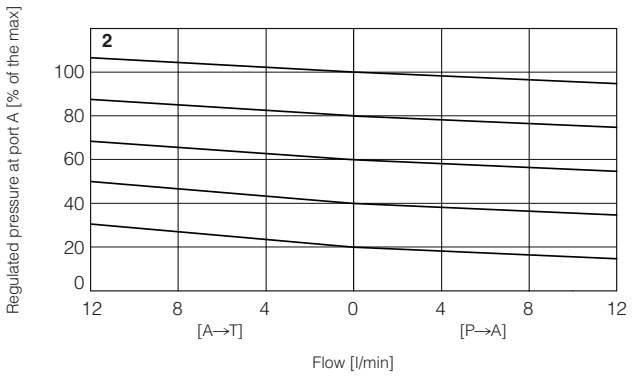

3-4 = Min. pressure/flow diagrams
with zero reference signal

3 = Pressure drops vs. flow P-A
4 = Pressure drops vs. flow A-T

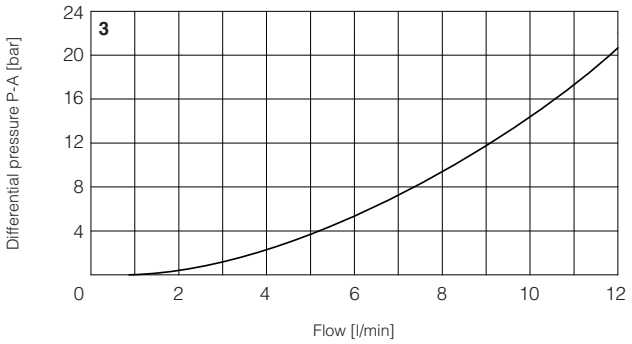

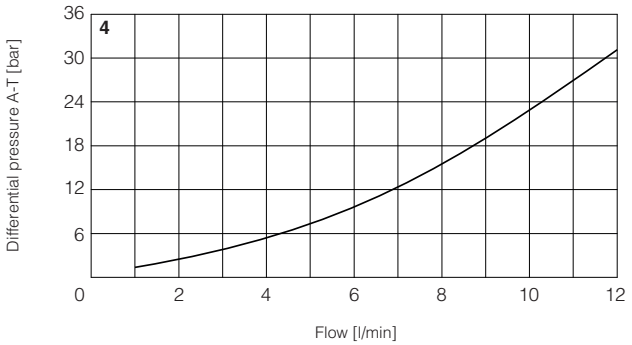

10 COIL VOLTAGE OPTIONS

6 = Optional coil to be used with Atos drivers with power supply 12 VDC.

18 = Optional coil to be used with electronic drivers not supplied by Atos, with power supply 24 VDC and with max current limited to 1A.

11 AIR BLEEDING

At the first valve commissioning the air eventually trapped inside the solenoid must be bled-off though the screw ① located at the rear side of the solenoid housing.
The presence of air may cause pressure instability and vibrations.

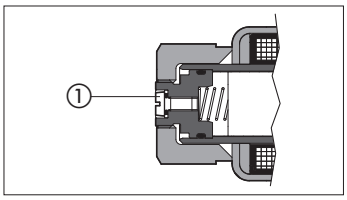

12 COILS WITH SPECIAL CONNECTORS

J option

Coil type COZEJ
AMP Junior Timer connector
Protection degree IP67

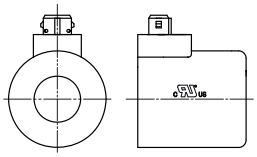

K option

Coil type COZEK
Deutsch connector, DT-04-2P male
Protection degree IP67

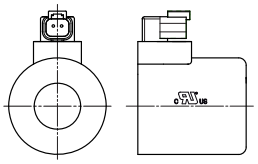

S option

Coil type COZES
Lead Wire connection
Cable length = 180 mm

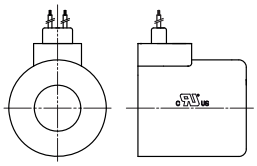

13 SOLENOID CONNECTION

PIN	SIGNAL	TECHNICAL SPECIFICATION	Connector code 666
1	**COIL**	Power supply	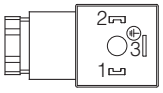
2	**COIL**	Power supply	
3	**GND**	Ground	

14 FASTENING BOLTS AND SEALS FOR RZGE

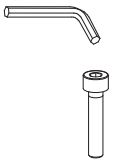	**Fastening bolts:** 4 socket head screws M5x50 class 12.9 Tightening torque = 8 Nm
	Seals: 3 OR 108 Diameter of ports P, T, A: Ø 5 mm Port B not used

15 INSTALLATION DIMENSIONS FOR RZGE [mm]

ISO 4401: 2005
Mounting surface: 4401-03-02-0-05 (see table P005)
(without port B)

Mass [kg]	
RZGE	1,5
RZGE with E-MI-AS-IR	2,0

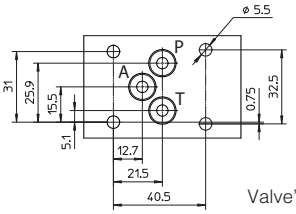

Valve's bottom view

RZGE-A

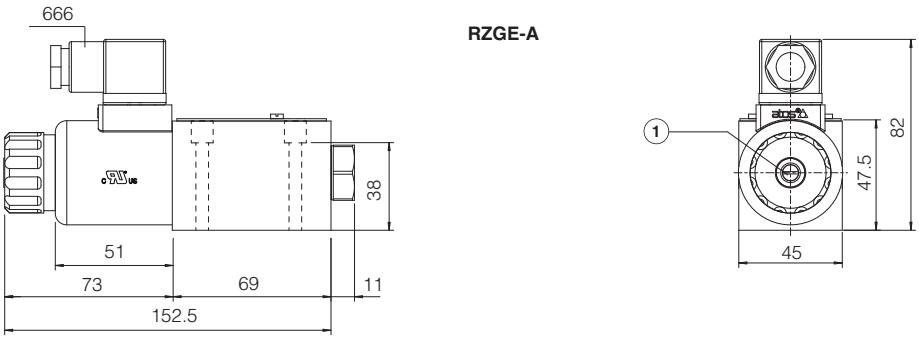

RZGE-A
(with E-MI-AS-IR digital driver)

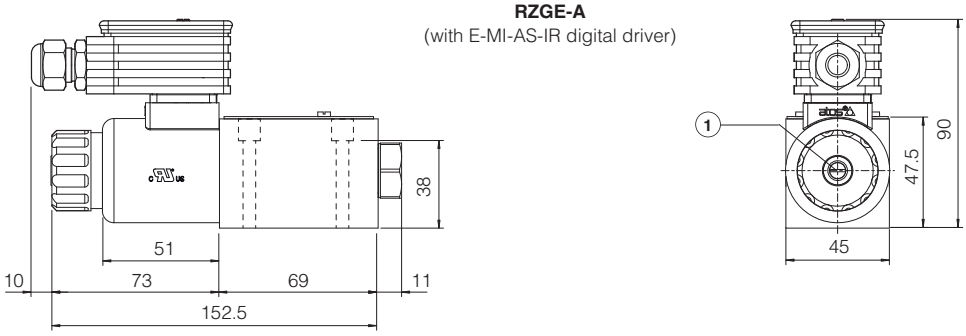

(1) = Air bleeding, see section 11

16 INSTALLATION DIMENSIONS FOR CART RZGE [mm]

Cavity dimensions for **CART RZGE-A**

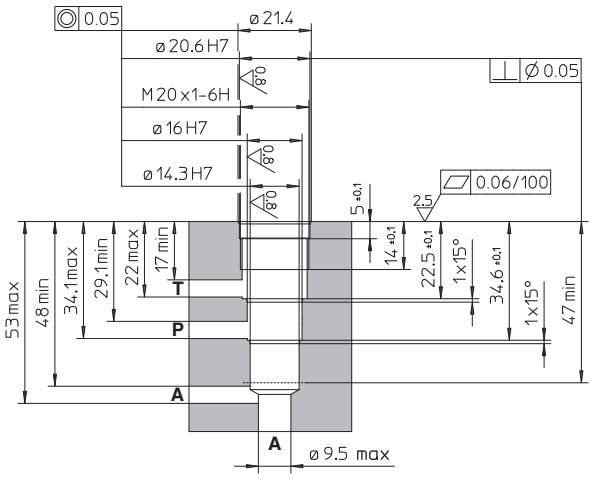

CART RZGE-A

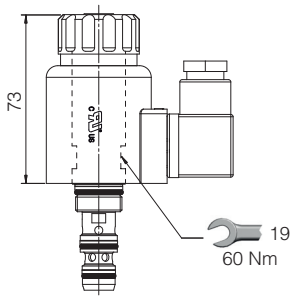

CART RZGE-A
(with E-MI-AS-IR digital driver)

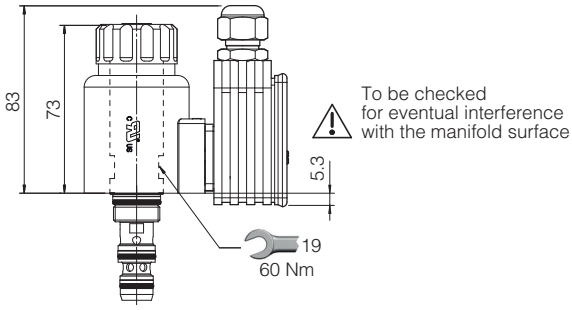

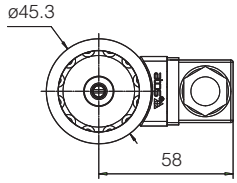

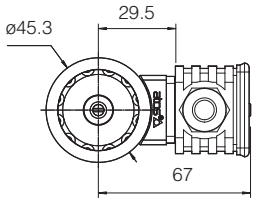

Mass [kg]	
CART RZGE	0,6
CART RZGE with E-MI-AS-IR	1,1

17 RELATED DOCUMENTATION

FS001	Basics for digital electrohydraulics	**GS050**	E-BM-AES digital driver
FS900	Operating and maintenance information for proportional valves	**GS500**	Programming tools
G010	E-MI-AC analog driver	**K800**	Electric and electronic connectors
G020	E-MI-AS-IR digital driver	**P005**	Mounting surfaces for electrohydraulic valves
G030	E-BM-AS digital driver		

Digital proportional reducing valves

piloted, without transducer, subplate or modular mounting

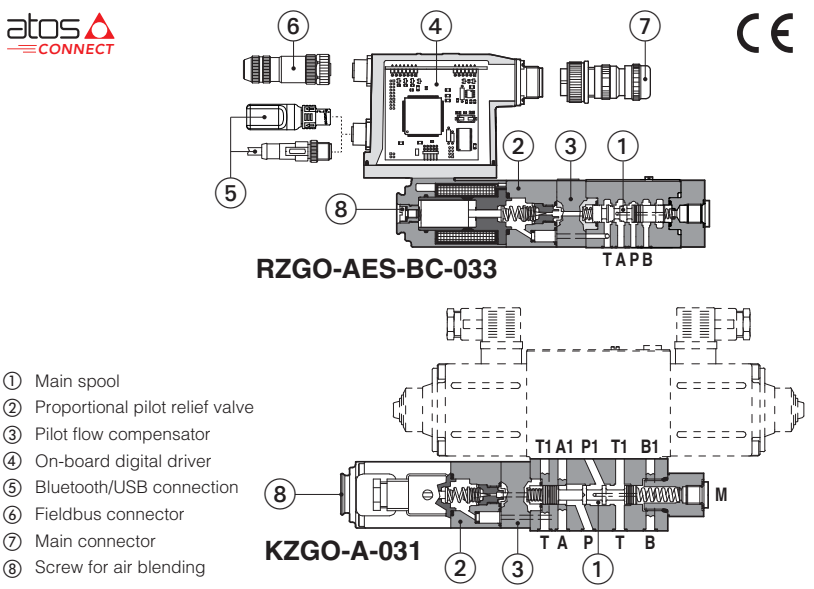

① Main spool
② Proportional pilot relief valve
③ Pilot flow compensator
④ On-board digital driver
⑤ Bluetooth/USB connection
⑥ Fieldbus connector
⑦ Main connector
⑧ Screw for air blending

RZGO-A , RZGO-AEB, RZGO-AES
HZGO-A , KZGO-A

Spool type, piloted, digital proportional reducing valves for pressure open loop controls, available in subplate size 06 or modular mounting size 06 and 10

A to be coupled with off-board driver.

AEB basic execution, with on-board digital driver, with analog reference signal or IO-Link interface for digital reference signals, valve settings, and real-time diagnostics.

AES full execution, with on-board digital driver which includes also fieldbus interfaces for digital reference signals, valve settings, and real-time diagnostics.

For **AEB** and **AES**, Bluetooth/USB connection is always present for valve settings via mobile App and Atos PC software.

RZGO, HZGO:	**KZGO**:
Size: **06** - ISO 4401	Size: **10** - ISO 4401
Max flow: **40 l/min**	Max flow: **100 l/min**
Max pressure: **350 bar**	Max pressure: **350 bar**

1 MODEL CODE

RZGO - AEB - NP - 033 / 210 / * / * / * * / *

RZGO
Proportional pressure reducing valve, piloted
RZGO = subplate, size 06
HZGO = modular, size 06
KZGO = modular, size 10

A = off-board driver, see section 3

Only for **RZGO**:
AEB = basic on-board digital driver
AES = full on-board digital driver

IO-Link interface, only for AEB, see section 7 :
NP = Not present **IL** = IO-Link

Fieldbus interfaces, only for AES, see section 8 :
BC = CANopen **EH** = EtherCAT
BP = PROFIBUS DP

Configuration:
031 = regulation on port P1, discharge in T (only for HZGO, KZGO)
033 = regulation on port A, discharge in T (only for RZGO)

Max regulated pressure:
50 = 50 bar (not for KZGO) **210** = 210 bar **350**= 350 bar
100 = 100 bar **315** = 315 bar

Electronic options, only for **AEB-NP** and **AES (1)**:
I = current reference input 4÷20 mA
Q = enable signal
Z = double power supply, enable, fault and monitor signals -12 pin connector

Bluetooth option, only for **AEB** and **AES (1)**, see section 6 :
T = Bluetooth adapter supplied with the valve

Coil voltage, only for **A** - see section 16 :
- = standard coil for 24VDC Atos drivers
6 = optional coil for 12VDC Atos drivers
18 = optional coil for low current drivers

Series number

Seals material, see section 12 :
- = NBR
PE = FKM
BT = NBR low temp.

(1) Possible combined options: IQ, IZ (/T Bluetooth adapter option can be combined with all other options)

2 HYDRAULIC SYMBOLS

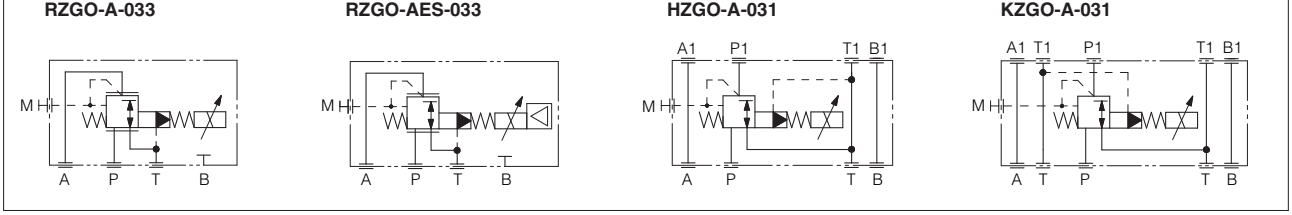

3 OFF-BOARD ELECTRONIC DRIVERS - only for **A**

Drivers model	E-MI-AC-01F		E-MI-AS-IR		E-BM-AS-PS		E-BM-AES
Type	Analog		Digital				
Voltage supply (VDC)	12	24	12	24	12	24	24
Valve coil option	/6	std	/6	std	/6	std	std
Format	plug-in to solenoid				DIN-rail panel		
Tech table	G010		G020		G030		GS050

4 GENERAL NOTES

Atos digital proportionals valves are CE marked according to the applicable directives (e.g. Immunity and Emission EMC Directive).
Installation, wirings and start-up procedures must be performed according to the general prescriptions shown in tech table **FS900** and in the user manuals included in the E-SW-SETUP programming software.

5 VALVE SETTINGS AND PROGRAMMING TOOLS - see tech. table **GS500**

5.1 Atos CONNECT mobile App

Free downloadable App for smartphones and tablets which allows quick access to valve main functional parameters and basic diagnostic information via Bluetooth, thus avoiding physical cable connection and significantly reducing commissioning time.
Atos CONNECT supports Atos digital valve drivers equipped with E-A-BTH adapter or with built-in Bluetooth. It does not support valves with p/Q control or axis controls.

Download on the App Store

GET IT ON Google Play

5.2 E-SW-SETUP PC software

Free downloadable software for PC allows to set all valve functional parameters and to access complete diagnostic information of digital valve drivers via Bluetooth/USB service port.
Atos E-SW-SETUP PC software supports all Atos digital valve drivers and it is available at www.atos.com in MyAtos area.

WARNING: drivers USB port is not isolated! For E-C-SB-USB/M12 cable, the use of E-A-SB-USB/OPT isolator adapter is highly recommended for PC protection

Bluetooth or USB connection

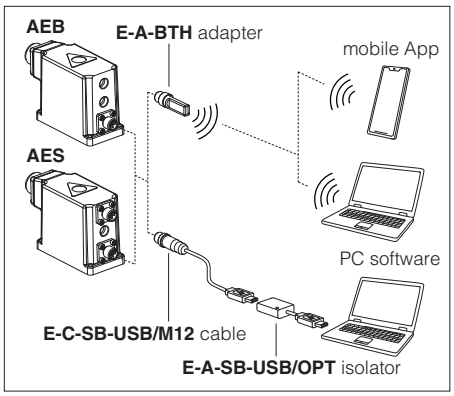

6 BLUETOOTH OPTION - see tech. table **GS500**

T option adds Bluetooth® connectivity to Atos valve drivers thanks to E-A-BTH adapter, which can be left permanently installed on-board, to allow the Bluetooth connection with the valve drivers at any time. E-A-BTH adapter can also be purchased separately and used to connect with any supported Atos digital product.
Bluetooth connection to the valve can be protected against unauthorised access by setting a personal password. The adapter leds visually indicates the status of valve driver and Bluetooth connection.

WARNING: for the list of countries where the Bluetooth adapter has been approved, see tech. table **GS500**
T option is not available for the Indian market, so the Bluetooth adapter must be ordered separately.

7 IO-LINK - only for **AEB**, see tech. table **GS520**

IO-Link allows low cost digital communication between the valve and machine central unit. The valve is directly connected to a port of an IO-Link master (point-to-point connection) via low-cost unshielded cables for digital reference, diagnostic and settings. The IO-Link master works as a hub exchanging this information with the machine central unit via fieldbus.

8 FIELDBUS - only for **AES**, see tech. table **GS510**

Fieldbus allows valve direct communication with machine control unit for digital reference, valve diagnostics and settings. These execution allow to operate the valves through fieldbus or analog signals available on the main connector.

9 GENERAL CHARACTERISTICS

Assembly position	Any position
Subplate surface finishing to ISO 4401	Acceptable roughness index: Ra ≤ 0,8, recommended Ra 0,4 – Flatness ratio 0,01/100
MTTFd valves according to EN ISO 13849	75 years, for further details see technical table P007
Ambient temperature range	**A:** **Standard** = -20°C ÷ +70°C **/PE** option = -20°C ÷ +70°C **/BT** option = -40°C ÷ +60°C **AEB, AES:** **Standard** = -20°C ÷ +60°C **/PE** option = -20°C ÷ +60°C **/BT** option = -40°C ÷ +60°C
Storage temperature range	**A:** **Standard** = -20°C ÷ +80°C **/PE** option = -20°C ÷ +80°C **/BT** option = -40°C ÷ +70°C **AEB, AES:** **Standard** = -20°C ÷ +70°C **/PE** option = -20°C ÷ +70°C **/BT** option = -40°C ÷ +70°C
Surface protection	Zinc coating with black passivation, galvanic treatment (driver housing for AEB and AES)
Corrosion resistance	Salt spray test (EN ISO 9227) > 200 h
Vibration resistance	See technical table G004 (for AEB and AES)
Compliance	CE according to EMC directive 2014/30/EU (Immunity: EN 61000-6-2; Emission: EN 61000-6-3) RoHS Directive 2011/65/EU as last update by 2015/863/EU REACH Regulation (EC) n°1907/2006

10 HYDRAULIC CHARACTERISTICS - based on mineral oil ISO VG 46 at 50 °C

Valve model		RZGO, HZGO	KZGO
Max regulated pressure	[bar]	50; 100; 210; 315; 350	100; 210; 315; 350
Max pressure at port P	[bar]	350	
Max pressure at port T	[bar]	210	
Min regulated pressure **(1)**	[bar]	1,0; 3,0 (only for /350)	
Min flow	[l/min]	2,5	3
Max flow	[l/min]	40	100
Response time 0-100% step signal (depending on installation) **(2)**	[ms]	≤ 50	≤ 80
Hysteresis		≤ 2 [% of max pressure]	
Linearity		≤ 3 [% of max pressure]	
Repeatability		≤ 2 [% of max pressure]	

Note: above performance data refer to valves coupled with Atos electronic drivers, see section 3

(1) Min pressure value to be increased of T line pressure

(2) Average response time value; the pressure variation in consequence of a modification of the reference input signal to the valve is affected by the stiffness of the hydraulic circuit: greater is the stiffness of the circuit, faster is the dynamic response

11 ELECTRICAL CHARACTERISTICS

Power supplies	Nominal : +24 VDC Rectified and filtered : VRMS = 20 ÷ 32 VMAX (ripple max 10 % VPP)				
Max power consumption	**A** = 30 W **AEB**, **AES** = 50 W				
Coil voltage code	standard		option /6		option /18
Max. solenoid current	2,6 A		3,25 A		1,5 A
Coil resistance R at 20°C	3 ÷ 3,3 Ω		2 ÷ 2,2 Ω		13 ÷ 13,4 Ω
Analog input signals	Voltage: range ±10 VDC (24 VMAX tolerant) Input impedance: Ri > 50 kΩ Current: range ±20 mA Input impedance: Ri = 500 Ω				
Monitor output	Output range: voltage ±5 VDC @ max 5 mA				
Enable input	Range: 0 ÷ 9 VDC (OFF state), 15 ÷ 24 VDC (ON state), 9 ÷ 15 VDC (not accepted); Input impedance: Ri > 87 kΩ				
Fault output	Output range : 0 ÷ 24 VDC (ON state ≅ VL+ [logic power supply] ; OFF state ≅ 0 V) @ max 50 mA; external negative voltage not allowed (e.g. due to inductive loads)				
Alarms	Solenoid not connected/short circuit, cable break with current reference signal, over/under temperature, current control monitoring, power supplies level				
Insulation class	H (180°) Due to the occurring surface temperatures of the solenoid coils, the European standards ISO 13732-1 and EN982 must be taken into account				
Protection degree to DIN EN60529	**A** = IP65; **AEB**, **AES** = IP66 / IP67 with mating connectors				
Duty factor	Continuous rating (ED=100%)				
Tropicalization	Tropical coating on electronics PCB				
Additional characteristics	Short circuit protection of solenoid's current supply; current control by P.I.D. with rapid solenoid switching; protection against reverse polarity of power supply				
Communication interface	USB Atos ASCII coding	IO-Link Interface and System Specification 1.1.3	CANopen EN50325-4 + DS408	PROFIBUS DP EN50170-2/IEC61158	EtherCAT IEC 61158
Communication physical layer	not insulated USB 2.0 + USB OTG	SDCI class port B	optical insulated CAN ISO11898	optical insulated RS485	Fast Ethernet, insulated 100 Base TX
Recommended wiring cable	LiYCY shielded cables, see section 21				

Note: a maximum time of 500 ms (depending on communication type) has to be considered between the driver energizing with the 24 VDC power supply and when the valve is ready to operate. During this time the current to the valve coils is switched to zero.

12 SEALS AND HYDRAULIC FLUIDS - for other fluids not included in below table, consult our technical office

Seals, recommended fluid temperature		NBR seals (standard) = -20°C ÷ +60°C (+80°C for **A**), with HFC hydraulic fluids = -20°C ÷ +50°C FKM seals (/PE option) = -20°C ÷ +80°C NBR low temp. seals (/BT option) = -40°C ÷ +60°C, with HFC hydraulic fluids = -20°C ÷ +50°C		
Recommended viscosity		20 ÷ 100 mm²/s - max allowed range 15 ÷ 380 mm²/s		
Max fluid contamination level	normal operation	ISO4406 class 18/16/13 NAS1638 class 7		see also filter section at www.atos.com or KTF catalog
	longer life	ISO4406 class 16/14/11 NAS1638 class 5		
Hydraulic fluid		**Suitable seals type**	**Classification**	**Ref. Standard**
Mineral oils		NBR, FKM, NBR low temp.	HL, HLP, HLPD, HVLP, HVLPD	DIN 51524
Flame resistant without water		FKM	HFDU, HFDR	ISO 12922
Flame resistant with water		NBR, NBR low temp.	HFC	

13 DIAGRAMS (based on mineral oil ISO VG 46 at 50 °C)

13.1 Regulation diagrams

with flow rate Q = 10 l/min

1 = RZGO, HZGO
2 = KZGO

Note: the presence of counter pressure at port T can affect the effective pressure regulation

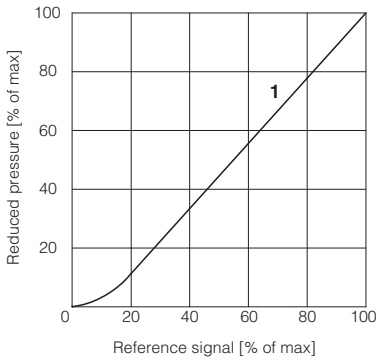

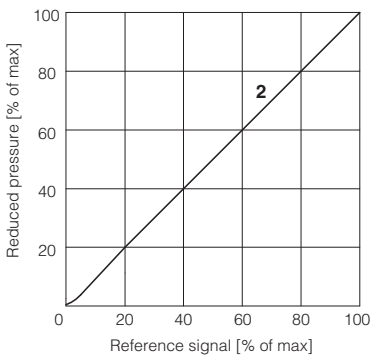

13.2 Pressure/flow diagrams

with reference pressure set with Q = 10 l/min

3 = RZGO, KZGO

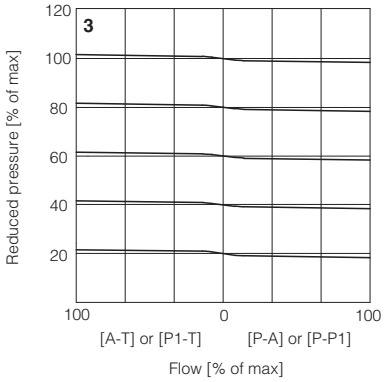

13.3 Pressure drop/flow diagram

RZGO, HZGO

4 = A-T or P1-T (dotted line /350)
5 = P-P1 or P-A

KZGO

6 = P1-T (dotted line /350)
7 = P-P1

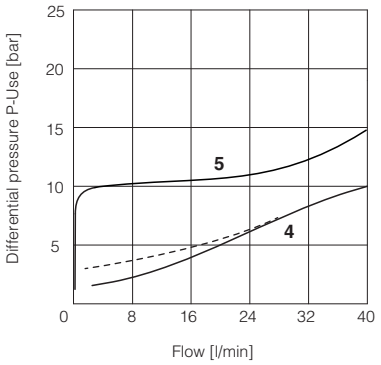

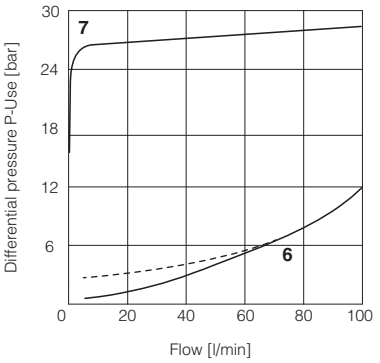

14 ELECTRONIC OPTIONS - only for **AEB-NP** and **AES**

I = This option provides 4 ÷ 20 mA current reference, instead of the standard 0 ÷ 10 VDC.
Input signal can be reconfigured via software selecting between voltage and current, within a maximum range of ±10 VDC or ±20 mA.
It is normally used in case of long distance between the machine control unit and the valve or where the reference signal can be affected by electrical noise; the valve functioning is disabled in case of reference signal cable breakage.

Q = This option permits to inhibit the valve function without removing the power supply to the driver. Upon disable command the current to the solenoid is zeroed and the valve's spool moves to rest position.
The option /Q is suggested for all cases where the valve has to be frequently inhibited during the machine cycle – see 18.5 for signal specifications.

Z = This option provides, on the 12 pin main connector, the following additional features:
Fault output signal - see 18.6
Enable input signal - see above option /Q
Power supply for driver's logics and communication - see 18.2

15 POSSIBLE COMBINED OPTIONS

Electronic options: /IQ, /IZ

Note: **/T** Bluetooth adapter option can be combined with all other options

16 COIL VOLTAGE OPTIONS - only for **A**

6 = Optional coil to be used with Atos drivers with power supply 12 VDC.

18 = Optional coil to be used with electronic drivers not supplied by Atos.

17 AIR BLEEDING

At the first valve commissioning the air eventually trapped inside the solenoid must be bled-off through the screw ① located at the rear side of the solenoid housing.
The presence of air may cause pressure instability and vibrations.

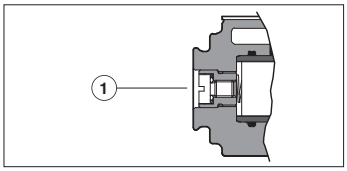

18 POWER SUPPLY AND SIGNALS SPECIFICATIONS - only for **AEB-NP** and **AES**

Generic electrical output signals of the valve (e.g. fault or monitor signals) must not be directly used to activate safety functions, like to switch-ON/OFF the machine's safety components, as prescribed by the European standards (Safety requirements of fluid technology systems and components-hydraulics, ISO 4413).

For **AEB-IL** signals see section 19

18.1 Power supply (V+ and V0)

The power supply must be appropriately stabilized or rectified and filtered: apply at least a 10000 μF/40 V capacitance to single phase rectifiers or a 4700 μF/40 V capacitance to three phase rectifiers. In case of separate power supply see 18.2.

⚠ A safety fuse is required in series to each power supply: 2,5 A time lag fuse.

18.2 Power supply for driver's logic and communication (VL+ and VL0) - only for **/Z** option

The power supply for driver's logic and communication must be appropriately stabilized or rectified and filtered: apply at least a 10000 μF/40 V capacitance to single phase rectifiers or a 4700 μF/40 V capacitance to three phase rectifiers.
The separate power supply for driver's logic on pin 9 and 10, allow to remove solenoid power supply from pin 1 and 2 maintaining active the diagnostics, USB and fieldbus communications.

⚠ A safety fuse is required in series to each driver's logic and communication power supply: 500 mA fast fuse.

18.3 Reference input signal (INPUT+)

The driver controls in closed loop the current to the valve proportionally to the external reference input signal.
Reference input signal is factory preset according to selected valve code, defaults are 0 ÷ 10 VDC for standard and 4 ÷ 20 mA for /I option.
Input signal can be reconfigured via software selecting between voltage and current, within a maximum range of ±10 VDC or ± 20 mA.
Drivers with fieldbus interface (BC, BP, EH) can be software set to receive reference signal directly from the machine control unit (fieldbus reference). Analog reference input signal can be used as on-off commands with input range 0 ÷ 24VDC.

18.4 Monitor output signal (MONITOR)

The driver generates an analog output signal (MONITOR) proportional to the actual coil current of the valve; the monitor output signal can be software set to show other signals available in the driver (e.g. analog reference, fieldbus reference).
Monitor output signal is factory preset according to selected valve code, default settings is 0 ÷ 5 VDC (1V = 1A).
Output signal can be reconfigured via software, within a maximum range of ±5 VDC.

18.5 Enable input signal (ENABLE) - not for standard

To enable the driver, supply a 24 VDC on pin 3 (pin C): Enable input signal allows to enable/disable the current supply to the solenoid, without removing the electrical power supply to the driver; it is used to active the communication and the other driver functions when the valve must be disabled for safety reasons. This condition **does not comply** with norms IEC 61508 and ISO 13849.
Enable input signal can be used as generic digital input by software selection.

18.6 Fault output signal (FAULT) - only for **/Z** option

Fault output signal indicates fault conditions of the driver (solenoid short circuits/not connected, reference signal broken for 4 ÷ 20 mA input, etc.).
Fault presence corresponds to 0 VDC, normal working corresponds to 24 VDC.
Fault status is not affected by the Enable input signal.

19 IO-LINK SIGNALS SPECIFICATIONS - only for **AEB-IL**

19.1 Power supply for IO-Link communication (L+ and L-)

The IO-Link master provides dedicated 24 VDC power supply for IO-Link communication.
Maximum power consumption: 2 W
Internal electrical isolation of power L+, L- from P24, N24

19.2 Power supply for driver's logic and valve regulation (P24 and N24)

The IO-Link master provides dedicated 24 VDC power supply for valve regulation, logics and diagnostics.
Maximum power consumption: 50 W
Internal electrical isolation of power P24, N24 from L+, L-

19.3 IO-Link data line (C/Q)

C/Q signal is used to establish communication between IO-Link master and valve.

20 ELECTRONIC CONNECTIONS

20.1 Main connector signals - 7 pin (A1) Standard and /Q option - for AEB-NP and AES

PIN	Standard	/Q	TECHNICAL SPECIFICATIONS	NOTES
A	**V+**		Power supply 24 VDC	Input - power supply
B	**V0**		Power supply 0 VDC	Gnd - power supply
C	**AGND**		Analog ground	Gnd - analog signal
		ENABLE	Enable (24 VDC) or disable (0 VDC) the driver, referred to V0	Input - on/off signal
D	**INPUT+**		Reference input signal: ±10 VDC / ±20 mA maximum range Defaults are 0 ÷ 10 VDC for standard and 4 ÷ 20 mA for /I option	Input - analog signal **Software selectable**
E	**INPUT-**		Negative reference input signal for INPUT+	Input - analog signal
F	**MONITOR** referred to: AGND | V0		Monitor output signal: ±5 VDC maximum range Default is 0 ÷ 5 VDC (1V = 1A)	Output - analog signal **Software selectable**
G	**EARTH**		Internally connected to driver housing	

20.2 Main connector signals - 12 pin (A2) /Z option - for AEB-NP and AES

PIN	/Z	TECHNICAL SPECIFICATIONS	NOTES
1	**V+**	Power supply 24 VDC	Input - power supply
2	**V0**	Power supply 0 VDC	Gnd - power supply
3	**ENABLE**	Enable (24 VDC) or disable (0 VDC) the driver, referred to VL0	Input - on/off signal
4	**INPUT+**	Reference input signal: ±10 VDC / ±20 mA maximum range Defaults are 0 ÷ 10 VDC for standard and 4 ÷ 20 mA for /I option	Input - analog signal **Software selectable**
5	**INPUT-**	Negative reference input signal for INPUT+	Input - analog signal
6	**MONITOR**	Monitor output signal: ±5 VDC maximum range, referred to VL0 Default is 0 ÷ 5 VDC (1V = 1A)	Output - analog signal **Software selectable**
7	**NC**	Do not connect	
8	**NC**	Do not connect	
9	**VL+**	Power supply 24 VDC for driver's logic and communication	Input - power supply
10	**VL0**	Power supply 0 VDC for driver's logic and communication	Gnd - power supply
11	**FAULT**	Fault (0 VDC) or normal working (24 VDC), referred to VL0	Output - on/off signal
PE	**EARTH**	Internally connected to driver housing	

Note: do not disconnect VL0 before VL+ when the driver is connected to PC USB port

20.3 IO-Link connector signals - M12 - 5 pin - Coding A, port class B (A) only for AEB-IL

PIN	SIGNAL	TECHNICAL SPECIFICATIONS	NOTES
1	**L+**	Power supply 24 VDC for IO-Link communication	Input - power supply
2	**P24**	Power supply 24 VDC for valve regulation, logics and diagnostics	Input - power supply
3	**L-**	Power supply 0 VDC for IO-Link communication	Gnd - power supply
4	**C/Q**	IO-Link data line	Input / Output - signal
5	**N24**	Power supply 0 VDC for valve regulation, logics and diagnostics	Gnd - power supply

Note: L+, L- and P24, N24 are electrically isolated

20.4 Communication connectors - for AEB (B) and AES (B) - (C)

(B) USB connector - M12 - 5 pin always present		
PIN	**SIGNAL**	**TECHNICAL SPECIFICATION (1)**
1	**+5V_USB**	Power supply
2	**ID**	Identification
3	**GND_USB**	Signal zero data line
4	**D-**	Data line -
5	**D+**	Data line +

(C1) BC fieldbus execution, connector - M12 - 5 pin (2)		
PIN	**SIGNAL**	**TECHNICAL SPECIFICATION (1)**
1	**CAN_SHLD**	Shield
2	**NC**	do not connect
3	**CAN_GND**	Signal zero data line
4	**CAN_H**	Bus line (high)
5	**CAN_L**	Bus line (low)

(C2) BP fieldbus execution, connector - M12 - 5 pin (2)		
PIN	**SIGNAL**	**TECHNICAL SPECIFICATION (1)**
1	**+5V**	Termination supply signal
2	**LINE-A**	Bus line (high)
3	**DGND**	Data line and termination signal zero
4	**LINE-B**	Bus line (low)
5	**SHIELD**	

(1) Shield connection on connector's housing is recommended

(C3) (C4) EH fieldbus execution, connector - M12 - 4 pin (2)		
PIN	**SIGNAL**	**TECHNICAL SPECIFICATION (1)**
1	**TX+**	Transmitter
2	**RX+**	Receiver
3	**TX-**	Transmitter
4	**RX-**	Receiver
Housing	**SHIELD**	

(2) Only for **AES** execution

20.5 Solenoid connection - only for A

PIN	SIGNAL	TECHNICAL SPECIFICATION	Connector code 666
1	**COIL**	Power supply	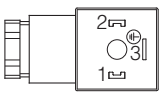
2	**COIL**	Power supply	
3	**GND**	Ground	

20.6 AEB-NP connections layout

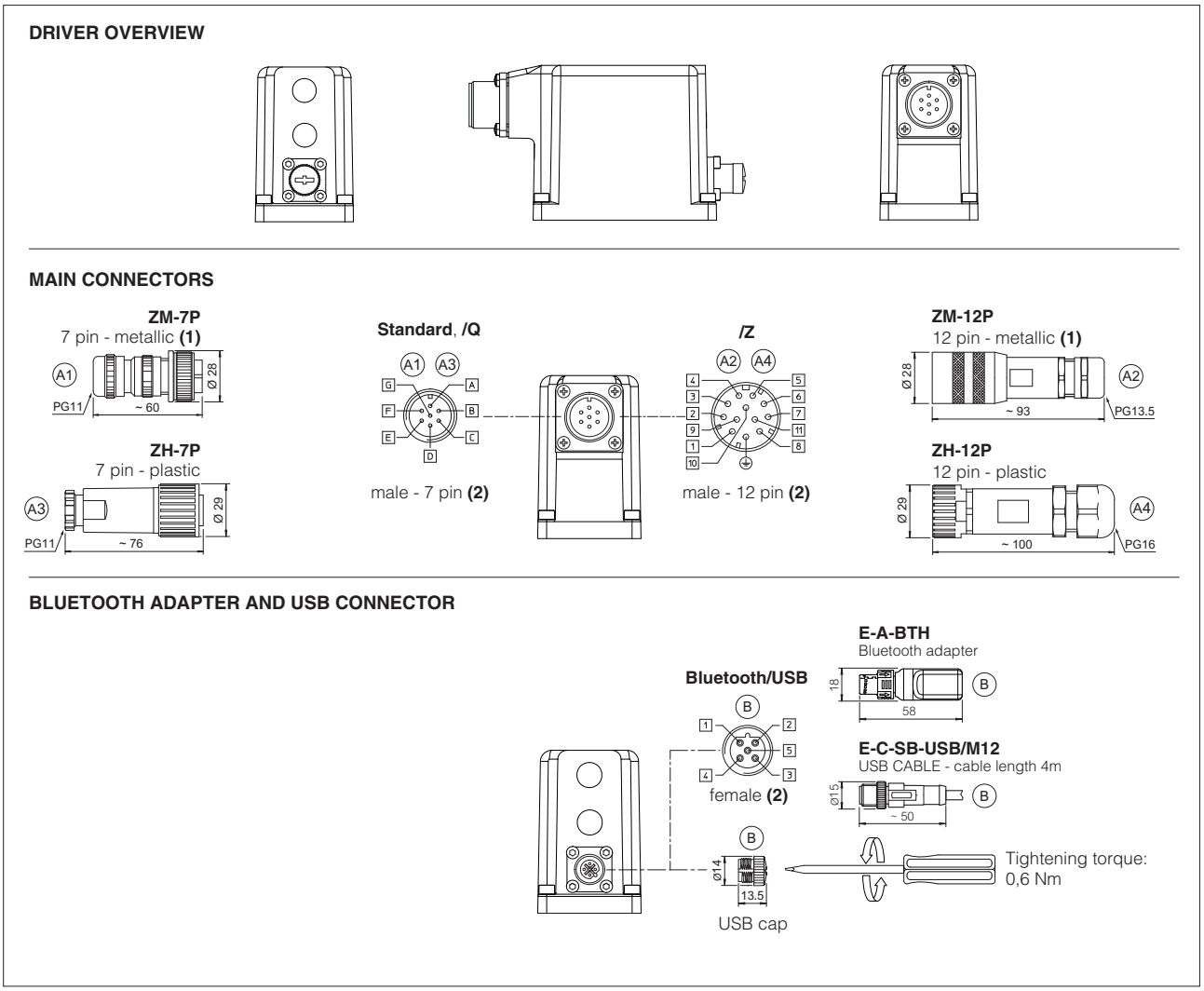

(1) Use of metallic connectors is strongly recommended in order to fulfill EMC requirements **(2)** Pin layout always referred to driver's view

20.7 AEB-IL connections layout

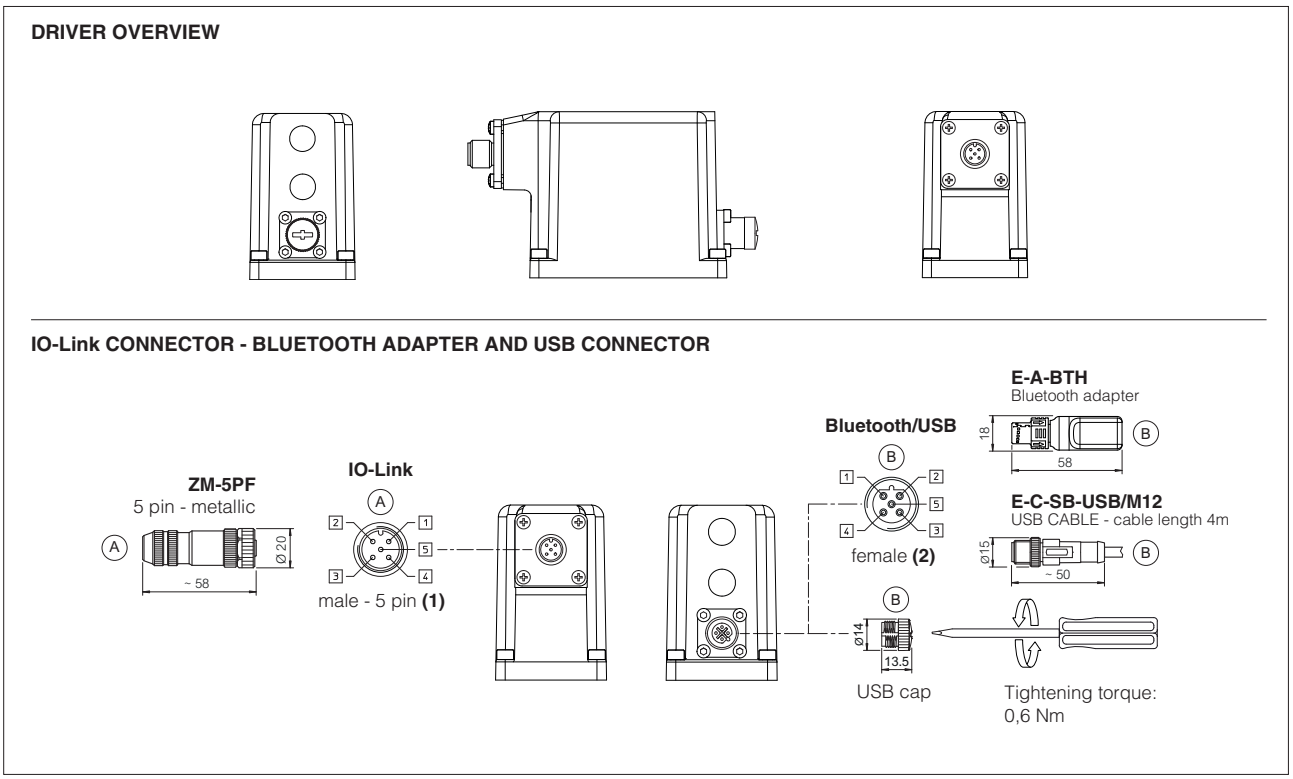

(1) Use of metallic connectors is strongly recommended in order to fulfill EMC requirements **(2)** Pin layout always referred to driver's view

20.8 AES connections layout

DRIVER OVERVIEW

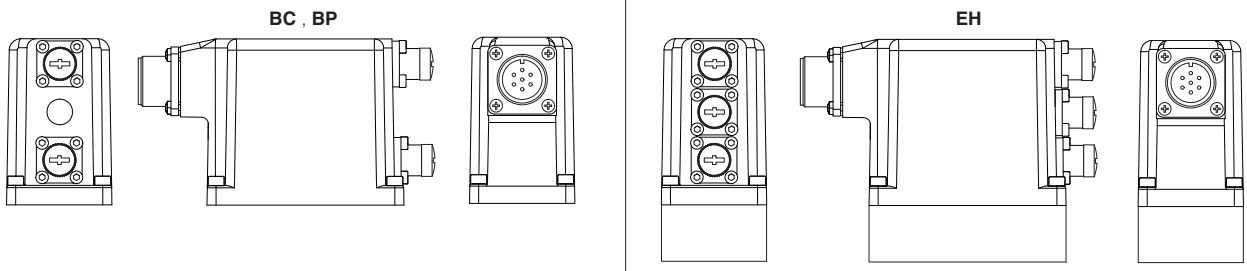

MAIN CONNECTORS

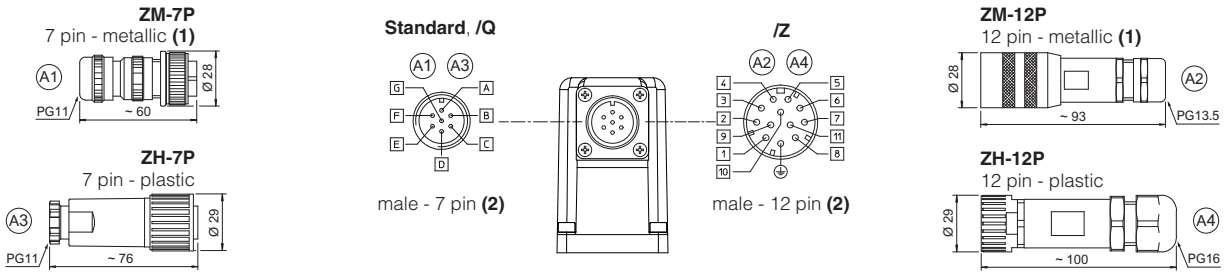

FIELDBUS CONNECTORS

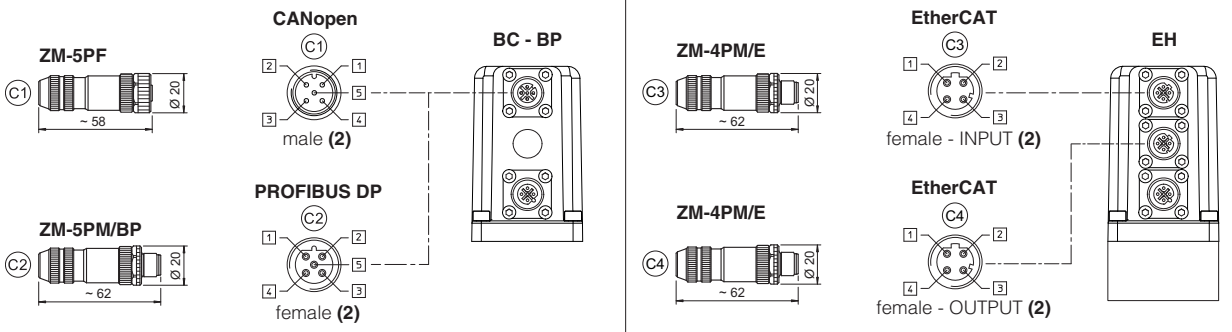

BLUETOOTH ADAPTER AND USB CONNECTOR

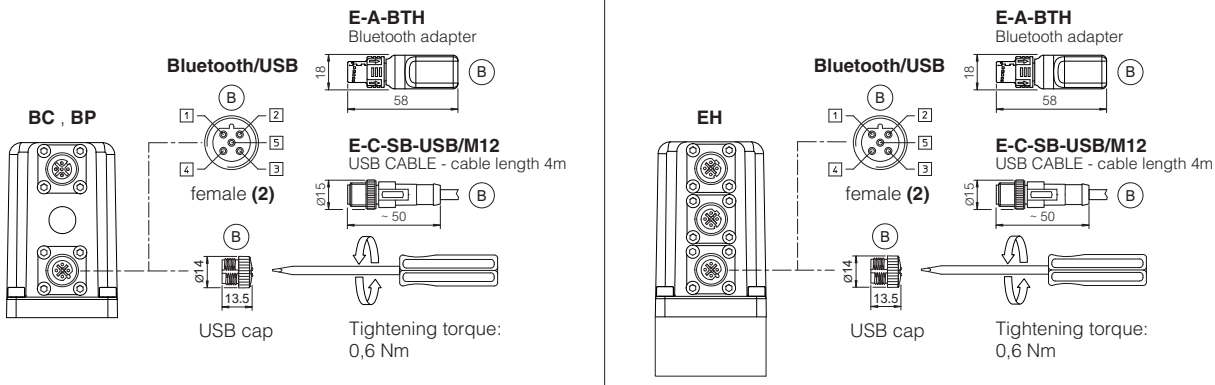

(1) Use of metallic connectors is strongly recommended in order to fulfill EMC requirements **(2)** Pin layout always referred to driver's view

21 CONNECTORS CHARACTERISTICS - to be ordered separately

21.1 Main connectors - 7 pin - for AEB-NP and AES

CONNECTOR TYPE	POWER SUPPLY AND SIGNALS	POWER SUPPLY AND SIGNALS
CODE	A1 ZM-7P	A3 ZH-7P
Type	7pin female straight circular	7pin female straight circular
Standard	According to MIL-C-5015	According to MIL-C-5015
Material	Metallic	Plastic reinforced with fiber glass
Cable gland	PG11	PG11
Recommended cable	LiYCY 7 x 0,75 mm² max 20 m (logic and power supply) or LiYCY 7 x 1 mm² max 40 m (logic and power supply)	LiYCY 7 x 0,75 mm² max 20 m (logic and power supply) or LiYCY 7 x 1 mm² max 40 m (logic and power supply)
Conductor size	up to 1 mm² - available for 7 wires	up to 1 mm² - available for 7 wires
Connection type	to solder	to solder
Protection (EN 60529)	IP 67	IP 67

21.2 Main connectors - 12 pin - for AEB-NP and AES

CONNECTOR TYPE	POWER SUPPLY AND SIGNALS	POWER SUPPLY AND SIGNALS
CODE	A2 ZM-12P	A4 ZH-12P
Type	12pin female straight circular	12pin female straight circular
Standard	DIN 43651	DIN 43651
Material	Metallic	Plastic reinforced with fiber glass
Cable gland	PG13,5	PG16
Recommended cable	LiYCY 12 x 0,75 mm² max 20 m (logic and power supply)	LiYCY 10 x 0,14mm² max 40 m (logic) LiYY 3 x 1mm² max 40 m (power supply)
Conductor size	0,5 mm² to 1,5 mm² - available for 12 wires	0,14 mm² to 0,5 mm² - available for 9 wires 0,5 mm² to 1,5 mm² - available for 3 wires
Connection type	to crimp	to crimp
Protection (EN 60529)	IP 67	IP 67

21.3 IO-Link connector - only for AEB-IL

CONNECTOR TYPE	IL IO-Link
CODE	A ZM-5PF
Type	5pin female straight circular
Standard	M12 coding A – IEC 61076-2-101
Material	Metallic
Cable gland	Pressure nut - cable diameter 6÷8 mm
Recommended cable	5 x 0,75 mm² max 20 m
Connection type	screw terminal
Protection (EN 60529)	IP 67

21.4 Fieldbus communication connectors - only for AES

CONNECTOR TYPE	BC CANopen (1)		BP PROFIBUS DP (1)		EH EtherCAT (2)
CODE	C1 ZM-5PF	C2 ZM-5PM	C1 ZM-5PF/BP	C2 ZM-5PM/BP	C1 C2 ZM-4PM/E
Type	5 pin female straight circular	5 pin male straight circular	5 pin female straight circular	5 pin male straight circular	4 pin male straight circular
Standard	M12 coding A – IEC 61076-2-101		M12 coding B – IEC 61076-2-101		M12 coding D – IEC 61076-2-101
Material	Metallic		Metallic		Metallic
Cable gland	Pressure nut - cable diameter 6÷8 mm		Pressure nut - cable diameter 6÷8 mm		Pressure nut - cable diameter 4÷8 mm
Cable	CANbus Standard (DR 303-1)		PROFIBUS DP Standard		Ethernet standard CAT-5
Connection type	screw terminal		screw terminal		terminal block
Protection (EN 60529)	IP67		IP 67		IP 67

(1) E-TRM-** terminators can be ordered separately - see tech table **GS500**

(2) Internally terminated

22 FASTENING BOLTS AND SEALS

	RZGO	HZGO	KZGO
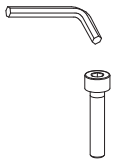	**Fastening bolts:** 4 socket head screws M5x50 class 12.9 Tightening torque = 8 Nm	**Fastening bolts:** M5 class 12.9 Tightening torque = 8 Nm	**Fastening bolts:** M6 class 12.9 Tightening torque = 15 Nm
	Seals: 4 OR 108 Diameter of ports P, A, T: Ø 7,5 mm Port B not used	**Seals:** 4 OR 108 Diameter of ports P, A, B, T: Ø 6,5 mm	**Seals:** 5 OR 2050; 1 OR 108 Diameter of ports P, A, B, T: Ø 10,5 mm (max)

RZGO

ISO 4401: 2005
Mounting surface: 4401-03-02-0-05
(see table P005)

Mass [kg]		
A	AEB, AES	AES-EH
2,8	3,3	3,4

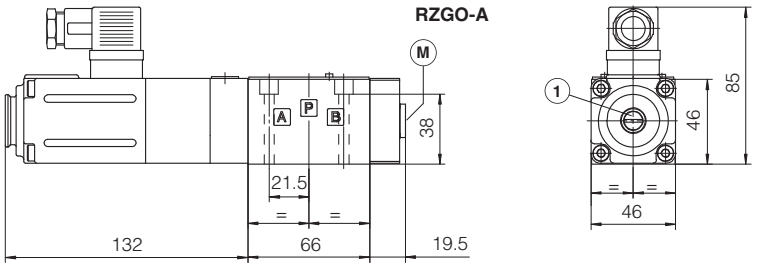

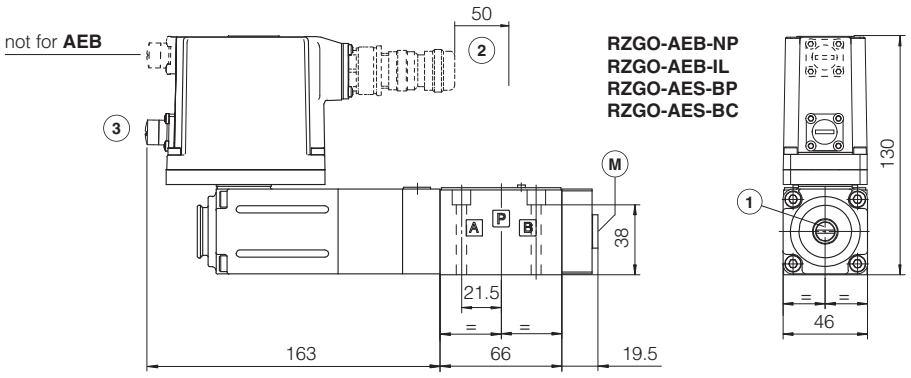

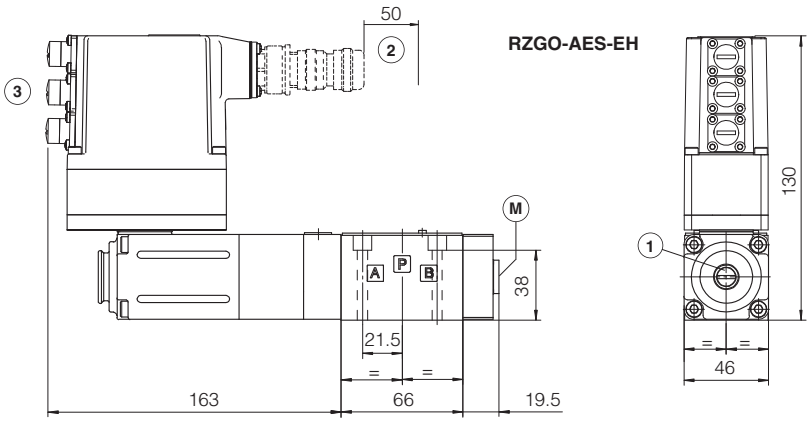

HZGO

ISO 4401: 2005
Mounting surface: 4401-03-02-0-05
(see table P005)

Mass [kg]
A
2,8

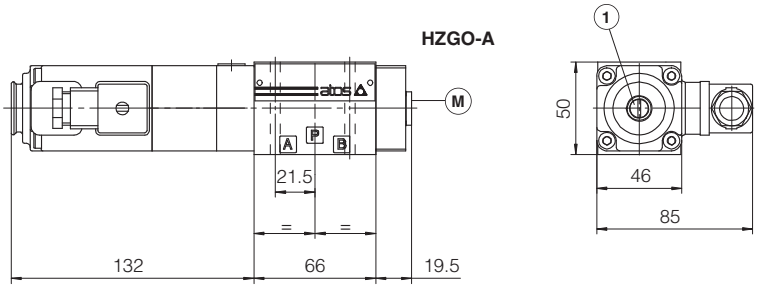

KZGO

ISO 4401: 2005
Mounting surface: 4401-05-04-0-05
(see table P005)

Mass [kg]
A
3,8

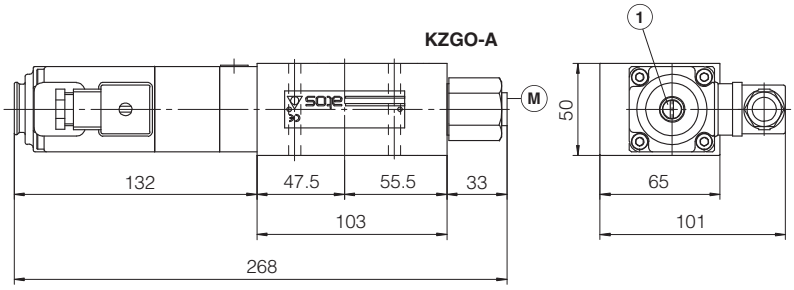

(1) = Air bleeding, see section 17
(2) = Space required for connection cable and for connector removal
(3) = The dimensions of connectors and Bluetooth adapter must be considered, see section 20.6, 20.7 and 20.8
(4) = Pressure gauge port = G1/4"

24 RELATED DOCUMENTATION

FS001	Basics for digital electrohydraulics	**K800**	Electric and electronic connectors
FS900	Operating and maintenance information for proportional valves	**P005**	Mounting surfaces for electrohydraulic valves
G010	E-MI-AC analog driver	**QB200**	Quickstart for AEB valves commissioning
G020	E-MI-AS-IR digital driver	**QF200**	Quickstart for AES valves commissioning
G030	E-BM-AS digital driver	**E-MAN-MI-AS**	E-MI-AS-IR user manual (off-board)
GS050	E-BM-AES digital driver	**E-MAN-BM-AS**	E-BM-AS user manual (off-board)
GS500	Programming tools	**E-MAN-BM-AES**	E-BM-AES user manual (off-board)
GS510	Fieldbus	**E-MAN-RI-AEB**	AEB user manual
GS520	IO-Link interface	**E-MAN-RI-AES**	AES user manual

Digital proportional reducing valves

piloted, without transducer

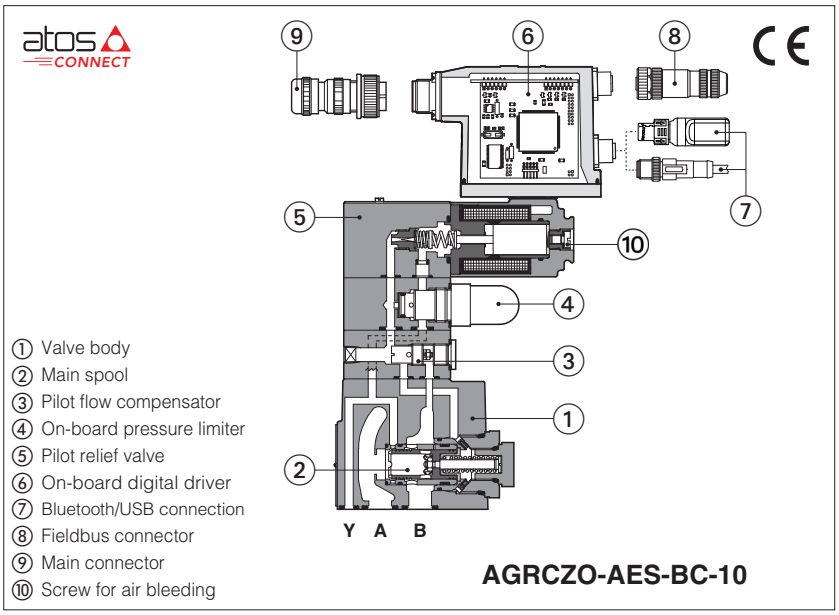

AGRCZO-AES-BC-10

AGRCZO-A, AGRCZO-AEB, AGRCZO-AES

Digital proportional reducing valves, piloted, for pressure open loop controls.

A to be coupled with off-board driver.

AEB basic execution, with on-board digital driver, with analog reference signal or IO-Link interface for digital reference signals, valve settings, and real-time diagnostics.

AES full execution, with on-board digital driver which includes also fieldbus interfaces for digital reference signals, valve settings, and real-time diagnostics.

For **AEB** and **AES**, Bluetooth/USB connection is always present for valve settings via mobile App and Atos PC software.

Size: **10** and **20** - ISO 5781
Max flow: **160** and **300 l/min**
Max pressure: **350 bar**

1 MODEL CODE

AGRCZO	-	AES	-	BC	-	10	/	315	/	*	/	*	/	*	*	/	*

Proportional pressure reducing valve, piloted

A = off-board driver, see section 3
AEB = basic on-board digital driver
AES = full on-board digital driver

IO-Link interface, only for AEB, see section 7 :
NP = Not present **IL** = IO-Link

Fieldbus interfaces, only for AES, see section 8 :
BC = CANopen **EH** = EtherCAT
BP = PROFIBUS DP

Valve size ISO 5781: **10, 20**

Max regulated pressure:
50 = 50 bar **210** = 210 bar **350**= 350 bar
100 = 100 bar **315** = 315 bar

(1) For possible combined options, see section 16

Hydraulic options (1):
P = with on-board mechanical pressure limiter
R = with on-board check valve for free reverse flow

Electronic options, only for **AEB-NP** and **AES (1)**:
I = current reference input 4 ÷ 20 mA
Q = enable signal
Z = double power supply, enable, fault and monitor signals - 12 pin connector

Bluetooth option, only for **AEB** and **AES (1)**, see section 6 :
T = Bluetooth adapter supplied with the valve

Coil voltage, only for **A** - see section 17 :
- = standard coil for 24VDC Atos drivers
6 = optional coil for 12VDC Atos drivers
18 = optional coil for low current drivers

Series number

Seals material, see section 12 :
- = NBR
PE = FKM
BT = NBR low temp.

2 HYDRAULIC SYMBOLS

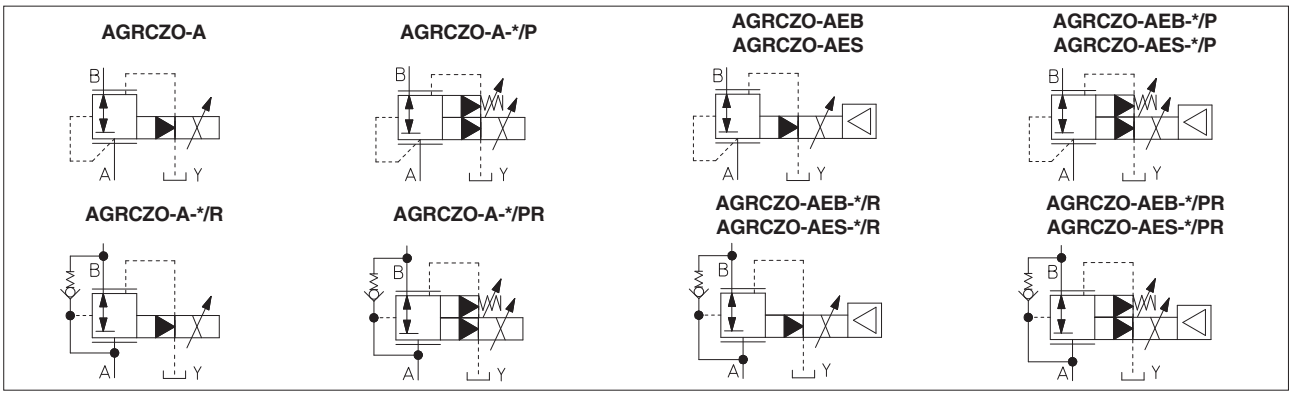

3 OFF-BOARD ELECTRONIC DRIVERS - only for **A**

Drivers model	E-MI-AC-01F		E-MI-AS-IR		E-BM-AS-PS		E-BM-AES
Type	Analog		Digital				
Voltage supply (VDC)	12	24	12	24	12	24	24
Valve coil option	/6	std	/6	std	/6	std	std
Format	plug-in to solenoid				DIN-rail panel		
Tech table	G010		G020		G030		GS050

4 GENERAL NOTES

Atos digital proportionals valves are CE marked according to the applicable directives (e.g. Immunity and Emission EMC Directive).
Installation, wirings and start-up procedures must be performed according to the general prescriptions shown in tech table **FS900** and in the user manuals included in the E-SW-SETUP programming software.

5 VALVE SETTINGS AND PROGRAMMING TOOLS - see tech. table **GS500**

5.1 Atos CONNECT mobile App

Free downloadable App for smartphones and tablets which allows quick access to valve main functional parameters and basic diagnostic information via Bluetooth, thus avoiding physical cable connection and significantly reducing commissioning time.
Atos CONNECT supports Atos digital valve drivers equipped with E-A-BTH adapter or with built-in Bluetooth. It does not support valves with p/Q control or axis controls.

Download on the App Store

GET IT ON Google Play

5.2 E-SW-SETUP PC software

Free downloadable software for PC allows to set all valve functional parameters and to access complete diagnostic information of digital valve drivers via Bluetooth/USB service port.
Atos E-SW-SETUP PC software supports all Atos digital valve drivers and it is available at www.atos.com in MyAtos area.

WARNING: drivers USB port is not isolated! For E-C-SB-USB/M12 cable, the use of E-A-SB-USB/OPT isolator adapter is highly recommended for PC protection

Bluetooth or USB connection

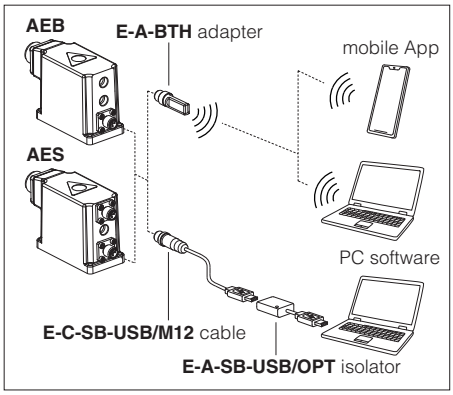

6 BLUETOOTH OPTION - see tech. table **GS500**

T option adds Bluetooth® connectivity to Atos valve drivers thanks to E-A-BTH adapter, which can be left permanently installed on-board, to allow the Bluetooth connection with the valve drivers at any time. E-A-BTH adapter can also be purchased separately and used to connect with any supported Atos digital product.
Bluetooth connection to the valve can be protected against unauthorised access by setting a personal password. The adapter leds visually indicates the status of valve driver and Bluetooth connection.

WARNING: for the list of countries where the Bluetooth adapter has been approved, see tech. table **GS500**
T option is not available for the Indian market, so the Bluetooth adapter must be ordered separately.

7 IO-LINK - only for **AEB**, see tech. table **GS520**

IO-Link allows low cost digital communication between the valve and machine central unit. The valve is directly connected to a port of an IO-Link master (point-to-point connection) via low-cost unshielded cables for digital reference, diagnostic and settings. The IO-Link master works as a hub exchanging this information with the machine central unit via fieldbus.

8 FIELDBUS - only for **AES**, see tech. table **GS510**

Fieldbus allows valve direct communication with machine control unit for digital reference, valve diagnostics and settings. These execution allow to operate the valves through fieldbus or analog signals available on the main connector.

9 GENERAL CHARACTERISTICS

Assembly position	Any position
Subplate surface finishing to ISO 4401	Acceptable roughness index: Ra ≤ 0,8, recommended Ra 0,4 – Flatness ratio 0,01/100
MTTFd valves according to EN ISO 13849	75 years, for further details see technical table P007
Ambient temperature range	**A:** **Standard** = -20°C ÷ +70°C **/PE** option = -20°C ÷ +70°C **/BT** option = -40°C ÷ +60°C **AEB, AES:** **Standard** = -20°C ÷ +60°C **/PE** option = -20°C ÷ +60°C **/BT** option = -40°C ÷ +60°C
Storage temperature range	**A:** **Standard** = -20°C ÷ +80°C **/PE** option = -20°C ÷ +80°C **/BT** option = -40°C ÷ +70°C **AEB, AES:** **Standard** = -20°C ÷ +70°C **/PE** option = -20°C ÷ +70°C **/BT** option = -40°C ÷ +70°C
Surface protection	Zinc coating with black passivation, galvanic treatment (driver housing for AEB and AES)
Corrosion resistance	Salt spray test (EN ISO 9227) > 200 h
Vibration resistance	See technical table G004 (for AEB and AES)
Compliance	CE according to EMC directive 2014/30/EU (Immunity: EN 61000-6-2; Emission: EN 61000-6-3) RoHS Directive 2011/65/EU as last update by 2015/863/EU REACH Regulation (EC) n°1907/2006

10 HYDRAULIC CHARACTERISTICS - based on mineral oil ISO VG 46 at 50 °C

Valve model		AGRCZO-*-10	AGRCZO-*-20
Max regulated pressure	[bar]	50; 100; 210; 315; 350	
Min regulated pressure **(1)**	[bar]	1; 3 (only for /350)	
Max pressure at port A or B	[bar]	350	
Max pressure at port Y	[bar]	pilot drain always external, to be directly connected to tank at zero pressure	
Max flow	[l/min]	160	300
Response time 0-100% step signal (depending on installation) **(2)**	[ms]	≤ 45	≤ 50
Hysteresis		≤ 2,0 [% of max pressure]	
Linearity		≤ 3,0 [% of max pressure]	
Repeatability		≤ 2,0 [% of max pressure]	

Note: above performance data refer to valves coupled with Atos electronic drivers, see section 3

(1) Min pressure value to be increased of T line pressure
(2) Average response time value; the pressure variation in consequence of a modification of the reference input signal to the valve is affected by the stiffness of the hydraulic circuit: greater is the stiffness of the circuit, faster is the dynamic response

11 ELECTRICAL CHARACTERISTICS

Power supplies	Nominal : +24 VDC Rectified and filtered : VRMS = 20 ÷ 32 VMAX (ripple max 10 % VPP)				
Max power consumption	**A** = 30 W **AEB**, **AES** = 50 W				
Coil voltage code	standard		option /6		option /18
Max. solenoid current	2,6 A		3,25 A		1,5 A
Coil resistance R at 20°C	3 ÷ 3,3 Ω		2 ÷ 2,2 Ω		13 ÷ 13,4 Ω
Analog input signals	Voltage: range ±10 VDC (24 VMAX tolerant) Input impedance: Ri > 50 kΩ Current: range ±20 mA Input impedance: Ri = 500 Ω				
Monitor output	Output range: voltage ±5 VDC @ max 5 mA				
Enable input	Range: 0 ÷ 9 VDC (OFF state), 15 ÷ 24 VDC (ON state), 9 ÷ 15 VDC (not accepted); Input impedance: Ri > 87 kΩ				
Fault output	Output range : 0 ÷ 24 VDC (ON state ≅ VL+ [logic power supply] ; OFF state ≅ 0 V) @ max 50 mA; external negative voltage not allowed (e.g. due to inductive loads)				
Alarms	Solenoid not connected/short circuit, cable break with current reference signal, over/under temperature, current control monitoring, power supplies level				
Insulation class	H (180°) Due to the occurring surface temperatures of the solenoid coils, the European standards ISO 13732-1 and EN982 must be taken into account				
Protection degree to DIN EN60529	**A** = IP65; **AEB**, **AES** = IP66 / IP67 with mating connectors				
Duty factor	Continuous rating (ED=100%)				
Tropicalization	Tropical coating on electronics PCB				
Additional characteristics	Short circuit protection of solenoid's current supply; current control by P.I.D. with rapid solenoid switching; protection against reverse polarity of power supply				
Communication interface	USB Atos ASCII coding	IO-Link Interface and System Specification 1.1.3	CANopen EN50325-4 + DS408	PROFIBUS DP EN50170-2/IEC61158	EtherCAT IEC 61158
Communication physical layer	not insulated USB 2.0+USB OTG	SDCI class port B	optical insulated CAN ISO11898	optical insulated RS485	Fast Ethernet, insulated 100 Base TX
Recommended wiring cable	LiYCY shielded cables, see section 22				

Note: a maximum time of 500 ms (depending on communication type) has to be considered between the driver energizing with the 24 VDC power supply and when the valve is ready to operate. During this time the current to the valve coils is switched to zero.

12 SEALS AND HYDRAULIC FLUIDS - for other fluids not included in below table, consult our technical office

Seals, recommended fluid temperature		NBR seals (standard) = -20°C ÷ +60°C (+80°C for **A**), with HFC hydraulic fluids = -20°C ÷ +50°C FKM seals (/PE option) = -20°C ÷ +80°C NBR low temp. seals (/BT option) = -40°C ÷ +60°C, with HFC hydraulic fluids = -20°C ÷ +50°C		
Recommended viscosity		20 ÷ 100 mm²/s - max allowed range 15 ÷ 380 mm²/s		
Max fluid contamination level	normal operation	ISO4406 class 18/16/13 NAS1638 class 7		see also filter section at www.atos.com or KTF catalog
	longer life	ISO4406 class 16/14/11 NAS1638 class 5		
Hydraulic fluid		**Suitable seals type**	**Classification**	**Ref. Standard**
Mineral oils		NBR, FKM, NBR low temp.	HL, HLP, HLPD, HVLP, HVLPD	DIN 51524
Flame resistant without water		FKM	HFDU, HFDR	ISO 12922
Flame resistant with water		NBR, NBR low temp.	HFC	

13 DIAGRAMS (based on mineral oil ISO VG 46 at 50 °C)

1 Regulation diagrams
with flow rate Q = 10 l/min

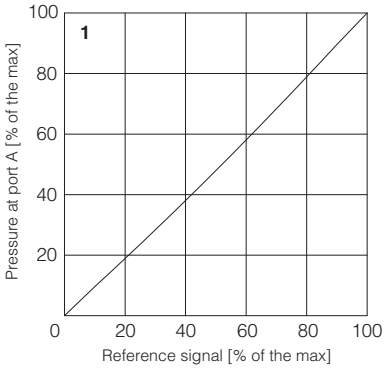

2 Pressure/flow diagrams
with reference pressure set with Q = 10 l/min

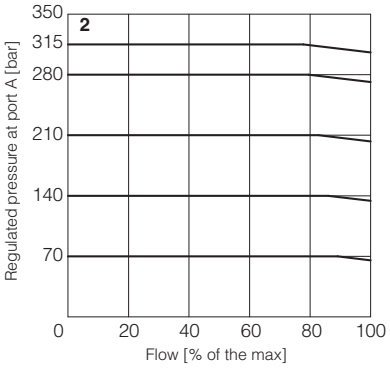

3-6 Pressure drop/flow diagrams
with zero reference signal

Differential pressure B→A
3 = AGRCZO-*-10
4 = AGRCZO-*-20

Differential pressure A→B (through check valve)
5 = AGRCZO-*-10/*/R
6 = AGRCZO-*-20/*/R

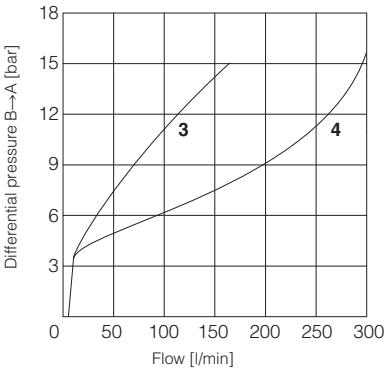

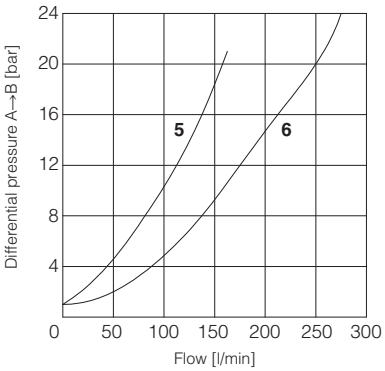

14 HYDRAULIC OPTIONS

P = This option provides a mechanical pressure limiter acting as protection against overpressure. For safety reasons the factory setting of the mechanical pressure limiter is fully unloaded (min pressure).
At the first commissioning it must be set at a value lightly higher than the max pressure regulated with the proportional control.
For the pressure setting of the mechanical pressure limiter, proceed according to following steps:

- apply the max reference input signal to the valve's driver. The system pressure will not increase until the mechanical pressure limiter remains unloaded
- turn clockwise the adjustment screw ① until the system pressure will increase up to a stable value corresponding to the pressure setpoint at max reference input signal
- turn clockwise the adjustment screw ① of additional 1 or 2 turns to ensure that the mechanical pressure limiter remains closed during the proportional valve working

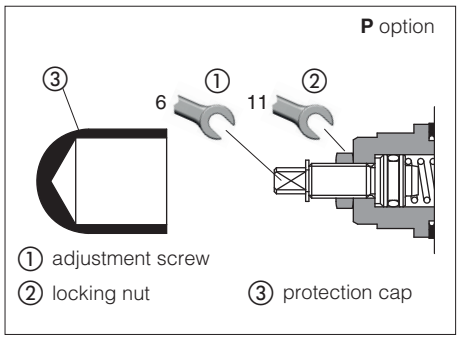

R = This option provides a integral check valve for free reverse flow A→B

① Check valve - cracking pressure = 0,5 bar

② Plug

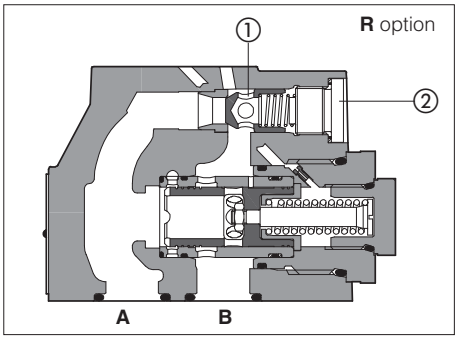

15 ELECTRONIC OPTIONS - only for **AEB-NP** and **AES**

I = This option provides 4 ÷ 20 mA current reference, instead of the standard 0 ÷ 10 VDC. Input signal can be reconfigured via software selecting between voltage and current, within a maximum range of ±10 VDC or ±20 mA.
It is normally used in case of long distance between the machine control unit and the valve or where the reference signal can be affected by electrical noise; the valve functioning is disabled in case of reference signal cable breakage.

Q = This option permits to inhibit the valve function without removing the power supply to the driver. Upon disable command the current to the solenoid is zeroed and the valve's spool moves to rest position.
The option /Q is suggested for all cases where the valve has to be frequently inhibited during the machine cycle – see 19.5 for signal specifications.

Z = This option provides, on the 12 pin main connector, the following additional features:
Fault output signal - see 19.6
Enable input signal - see above option /Q
Power supply for driver's logics and communication - see 19.2

16 POSSIBLE COMBINED OPTIONS

for **A**: /PR

for **AEB** and **AES**: /IP, /IQ, /IR, /IZ, /PQ, /PR, /PZ, /QR, /RZ, /IPQ, /IPR, /IPZ, /IQR, /IRZ, /PQR, /PRZ, /IPQR, /IPRZ

Note: **/T** Bluetooth adapter option can be combined with all other options

17 COIL VOLTAGE OPTIONS - only for **A**

6 = Optional coil to be used with Atos drivers with power supply 12 VDC.

18 = Optional coil to be used with electronic drivers not supplied by Atos.

18 AIR BLEEDING

At the first valve commissioning the air eventually trapped inside the solenoid must be bled-off through the screw ① located at the rear side of the solenoid housing.
The presence of air may cause pressure instability and vibrations.

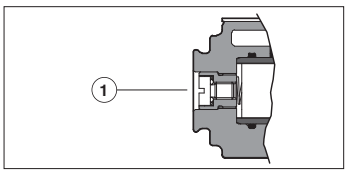

19 POWER SUPPLY AND SIGNALS SPECIFICATIONS - only for **AEB-NP** and **AES**

Generic electrical output signals of the valve (e.g. fault or monitor signals) must not be directly used to activate safety functions, like to switch-ON/OFF the machine's safety components, as prescribed by the European standards (Safety requirements of fluid technology systems and components-hydraulics, ISO 4413).

For **AEB-IL** signals see section 20

19.1 Power supply (V+ and V0)

The power supply must be appropriately stabilized or rectified and filtered: apply at least a 10000 µF/40 V capacitance to single phase rectifiers or a 4700 µF/40 V capacitance to three phase rectifiers. In case of separate power supply see 19.2.

⚠ A safety fuse is required in series to each power supply: 2,5 A time lag fuse.

19.2 Power supply for driver's logic and communication (VL+ and VL0) - only for **/Z** option

The power supply for driver's logic and communication must be appropriately stabilized or rectified and filtered: apply at least a 10000 µF/40 V capacitance to single phase rectifiers or a 4700 µF/40 V capacitance to three phase rectifiers.
The separate power supply for driver's logic on pin 9 and 10, allow to remove solenoid power supply from pin 1 and 2 maintaining active the diagnostics, USB and fieldbus communications.

⚠ A safety fuse is required in series to each driver's logic and communication power supply: 500 mA fast fuse.

19.3 Reference input signal (INPUT+)

The driver controls in closed loop the current to the valve proportionally to the external reference input signal.
Reference input signal is factory preset according to selected valve code, defaults are 0 ÷ 10 VDC for standard and 4 ÷ 20 mA for /I option.
Input signal can be reconfigured via software selecting between voltage and current, within a maximum range of ±10 VDC or ± 20 mA.
Drivers with fieldbus interface (BC, BP, EH) can be software set to receive reference signal directly from the machine control unit (fieldbus reference). Analog reference input signal can be used as on-off commands with input range 0 ÷ 24VDC.

19.4 Monitor output signal (MONITOR)

The driver generates an analog output signal (MONITOR) proportional to the actual coil current of the valve; the monitor output signal can be software set to show other signals available in the driver (e.g. analog reference, fieldbus reference).
Monitor output signal is factory preset according to selected valve code, default settings is 0 ÷ 5 VDC (1V = 1A).
Output signal can be reconfigured via software, within a maximum range of ±5 VDC.

19.5 Enable input signal (ENABLE) - not for standard

To enable the driver, supply a 24 VDC on pin 3 (pin C): Enable input signal allows to enable/disable the current supply to the solenoid, without removing the electrical power supply to the driver; it is used to active the communication and the other driver functions when the valve must be disabled for safety reasons. This condition **does not comply** with norms IEC 61508 and ISO 13849.
Enable input signal can be used as generic digital input by software selection.

19.6 Fault output signal (FAULT) - only for **/Z** option

Fault output signal indicates fault conditions of the driver (solenoid short circuits/not connected, reference signal broken for 4 ÷ 20 mA input, etc.).
Fault presence corresponds to 0 VDC, normal working corresponds to 24 VDC.
Fault status is not affected by the Enable input signal.

20 IO-LINK SIGNALS SPECIFICATIONS - only for **AEB-IL**

20.1 Power supply for IO-Link communication (L+ and L-)

The IO-Link master provides dedicated 24 VDC power supply for IO-Link communication.
Maximum power consumption: 2 W
Internal electrical isolation of power L+, L- from P24, N24

20.2 Power supply for driver's logic and valve regulation (P24 and N24)

The IO-Link master provides dedicated 24 VDC power supply for valve regulation, logics and diagnostics.
Maximum power consumption: 50 W
Internal electrical isolation of power P24, N24 from L+, L-

20.3 IO-Link data line (C/Q)

C/Q signal is used to establish communication between IO-Link master and valve.

21 ELECTRONIC CONNECTIONS

21.1 Main connector signals - 7 pin (A1) Standard and /Q option - for AEB-NP and AES

PIN	Standard	/Q	TECHNICAL SPECIFICATIONS	NOTES
A	**V+**		Power supply 24 VDC	Input - power supply
B	**V0**		Power supply 0 VDC	Gnd - power supply
C	**AGND**		Analog ground	Gnd - analog signal
		ENABLE	Enable (24 VDC) or disable (0 VDC) the driver, referred to V0	Input - on/off signal
D	**INPUT+**		Reference input signal: ±10 VDC / ±20 mA maximum range Defaults are 0 ÷ 10 VDC for standard and 4 ÷ 20 mA for /I option	Input - analog signal **Software selectable**
E	**INPUT-**		Negative reference input signal for INPUT+	Input - analog signal
F	**MONITOR** referred to: AGND | V0		Monitor output signal: ±5 VDC maximum range Default is 0 ÷ 5 VDC (1V = 1A)	Output - analog signal **Software selectable**
G	**EARTH**		Internally connected to driver housing	

21.2 Main connector signals - 12 pin (A2) /Z option - for AEB-NP and AES

PIN	/Z	TECHNICAL SPECIFICATIONS	NOTES
1	**V+**	Power supply 24 VDC	Input - power supply
2	**V0**	Power supply 0 VDC	Gnd - power supply
3	**ENABLE**	Enable (24 VDC) or disable (0 VDC) the driver, referred to VL0	Input - on/off signal
4	**INPUT+**	Reference input signal: ±10 VDC / ±20 mA maximum range Defaults are 0 ÷ 10 VDC for standard and 4 ÷ 20 mA for /I option	Input - analog signal **Software selectable**
5	**INPUT-**	Negative reference input signal for INPUT+	Input - analog signal
6	**MONITOR**	Monitor output signal: ±5 VDC maximum range, referred to VL0 Default is 0 ÷ 5 VDC (1V = 1A)	Output - analog signal **Software selectable**
7	**NC**	Do not connect	
8	**NC**	Do not connect	
9	**VL+**	Power supply 24 VDC for driver's logic and communication	Input - power supply
10	**VL0**	Power supply 0 VDC for driver's logic and communication	Gnd - power supply
11	**FAULT**	Fault (0 VDC) or normal working (24 VDC), referred to VL0	Output - on/off signal
PE	**EARTH**	Internally connected to driver housing	

Note: do not disconnect VL0 before VL+ when the driver is connected to PC USB port

21.3 IO-Link connector signals - M12 - 5 pin - Coding A, port class B (A) only for AEB-IL

PIN	SIGNAL	TECHNICAL SPECIFICATIONS	NOTES
1	**L+**	Power supply 24 VDC for IO-Link communication	Input - power supply
2	**P24**	Power supply 24 VDC for valve regulation, logics and diagnostics	Input - power supply
3	**L-**	Power supply 0 VDC for IO-Link communication	Gnd - power supply
4	**C/Q**	IO-Link data line	Input / Output - signal
5	**N24**	Power supply 0 VDC for valve regulation, logics and diagnostics	Gnd - power supply

Note: L+, L- and P24, N24 are electrically isolated

21.4 Communication connectors - for AEB (B) and AES (B) - (C)

(B) **USB connector - M12 - 5 pin** always present		
PIN	**SIGNAL**	**TECHNICAL SPECIFICATION (1)**
1	**+5V_USB**	Power supply
2	**ID**	Identification
3	**GND_USB**	Signal zero data line
4	**D-**	Data line -
5	**D+**	Data line +

(C1) **BC fieldbus execution, connector - M12 - 5 pin (2)**		
PIN	**SIGNAL**	**TECHNICAL SPECIFICATION (1)**
1	**CAN_SHLD**	Shield
2	**NC**	do not connect
3	**CAN_GND**	Signal zero data line
4	**CAN_H**	Bus line (high)
5	**CAN_L**	Bus line (low)

(C2) **BP fieldbus execution, connector - M12 - 5 pin (2)**		
PIN	**SIGNAL**	**TECHNICAL SPECIFICATION (1)**
1	**+5V**	Termination supply signal
2	**LINE-A**	Bus line (high)
3	**DGND**	Data line and termination signal zero
4	**LINE-B**	Bus line (low)
5	**SHIELD**	

(1) Shield connection on connector's housing is recommended

(C3) (C4) **EH fieldbus execution, connector - M12 - 4 pin (2)**		
PIN	**SIGNAL**	**TECHNICAL SPECIFICATION (1)**
1	**TX+**	Transmitter
2	**RX+**	Receiver
3	**TX-**	Transmitter
4	**RX-**	Receiver
Housing	**SHIELD**	

(2) Only for **AES** execution

21.5 Solenoid connection - only for A

PIN	SIGNAL	TECHNICAL SPECIFICATION	Connector code 666
1	**COIL**	Power supply	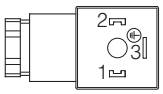
2	**COIL**	Power supply	
3	**GND**	Ground	

21.6 AEB-NP connections layout

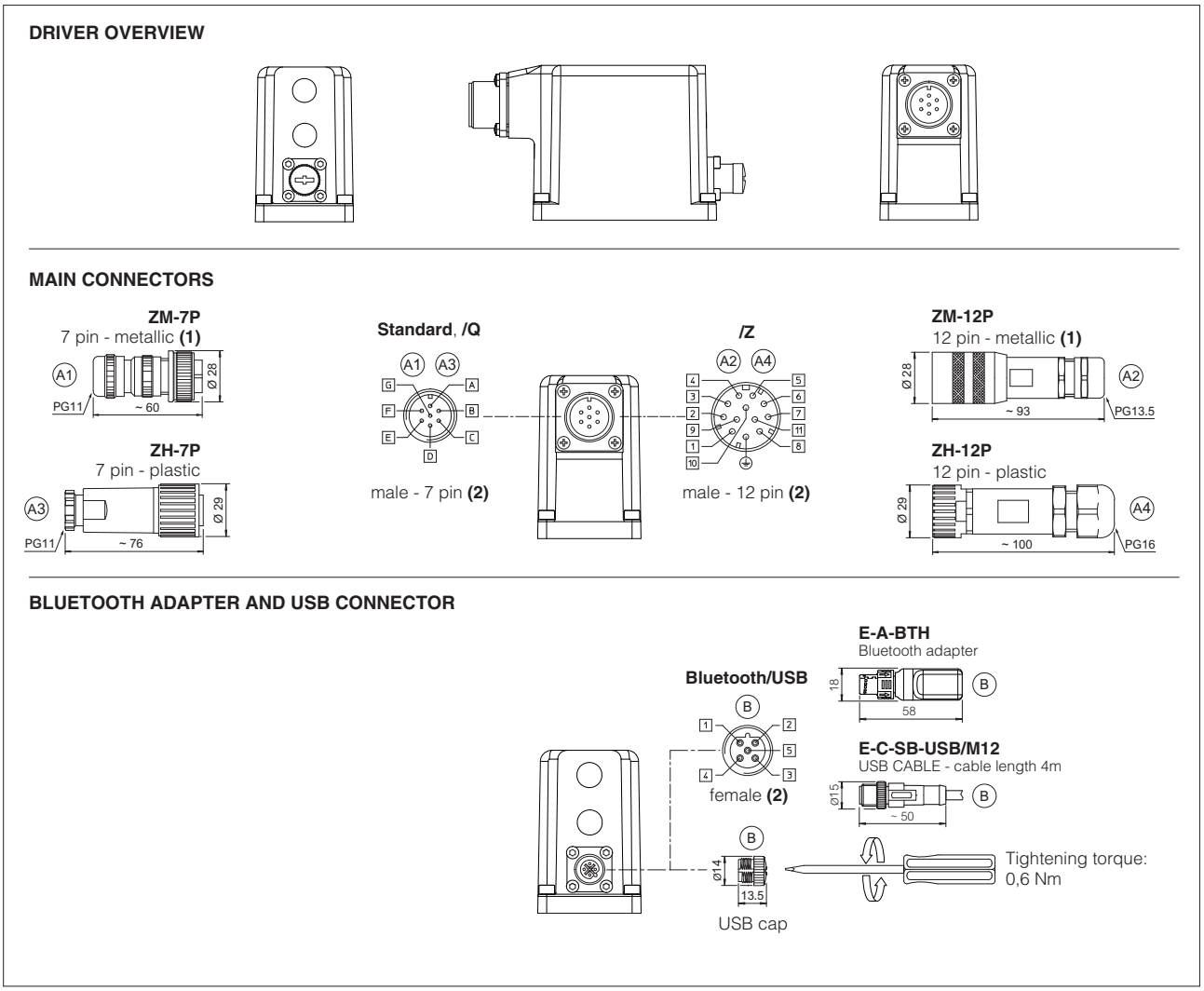

(1) Use of metallic connectors is strongly recommended in order to fulfill EMC requirements **(2)** Pin layout always referred to driver's view

21.7 AEB-IL connections layout

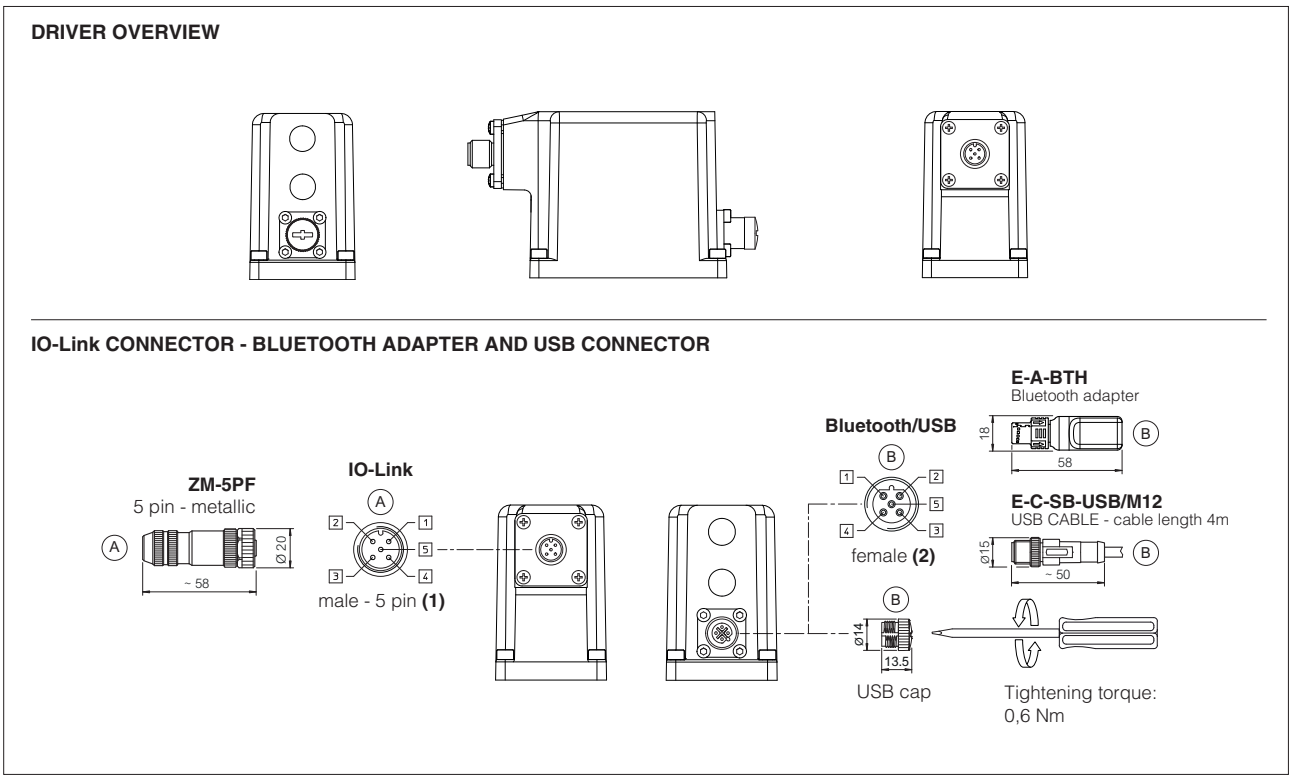

(1) Use of metallic connectors is strongly recommended in order to fulfill EMC requirements **(2)** Pin layout always referred to driver's view

21.8 AES connections layout

DRIVER OVERVIEW

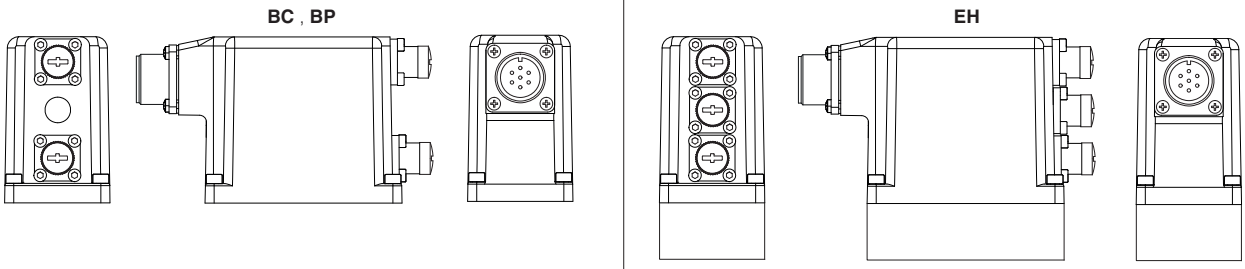

MAIN CONNECTORS

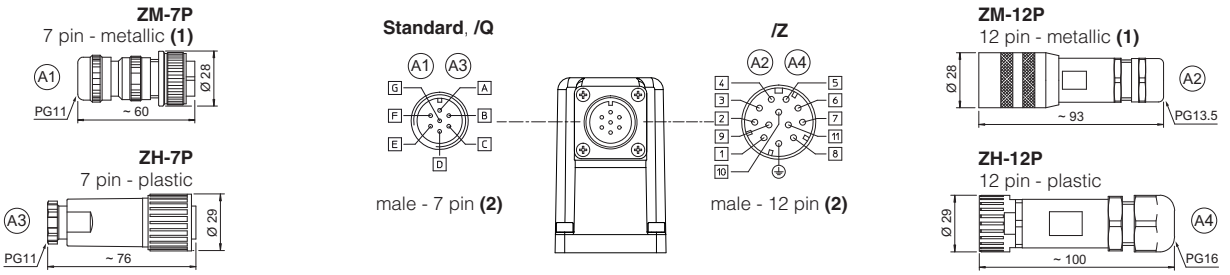

FIELDBUS CONNECTORS

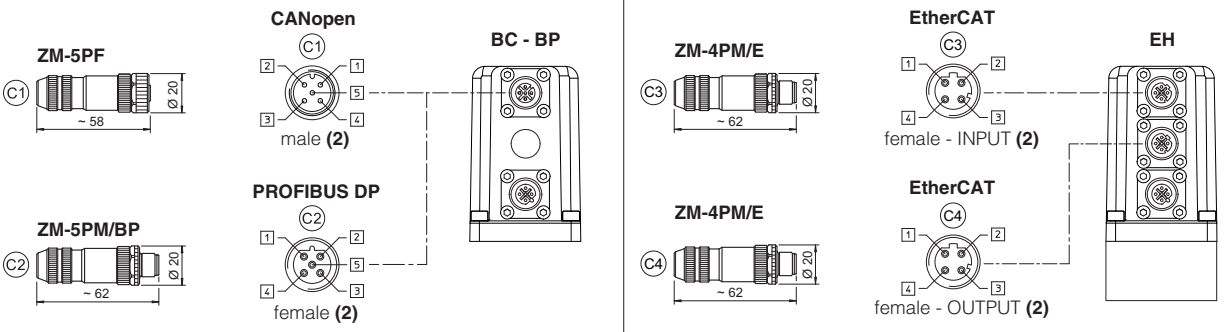

BLUETOOTH ADAPTER AND USB CONNECTOR

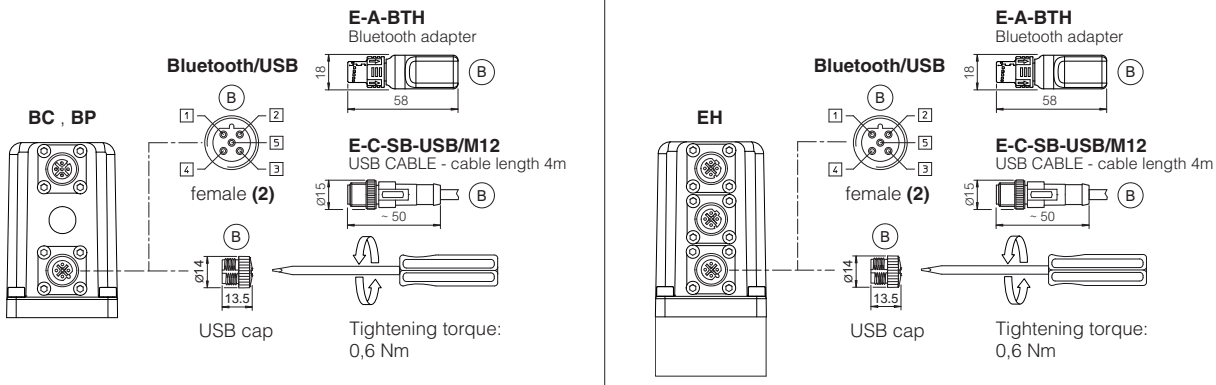

(1) Use of metallic connectors is strongly recommended in order to fulfill EMC requirements **(2)** Pin layout always referred to driver's view

22 CONNECTORS CHARACTERISTICS - to be ordered separately

22.1 Main connectors - 7 pin - for **AEB-NP** and **AES**

CONNECTOR TYPE	POWER SUPPLY AND SIGNALS	POWER SUPPLY AND SIGNALS
CODE	(A1) ZM-7P	(A3) ZH-7P
Type	7pin female straight circular	7pin female straight circular
Standard	According to MIL-C-5015	According to MIL-C-5015
Material	Metallic	Plastic reinforced with fiber glass
Cable gland	PG11	PG11
Recommended cable	LiYCY 7 x 0,75 mm² max 20 m (logic and power supply) or LiYCY 7 x 1 mm² max 40 m (logic and power supply)	LiYCY 7 x 0,75 mm² max 20 m (logic and power supply) or LiYCY 7 x 1 mm² max 40 m (logic and power supply)
Conductor size	up to 1 mm² - available for 7 wires	up to 1 mm² - available for 7 wires
Connection type	to solder	to solder
Protection (EN 60529)	IP 67	IP 67

22.2 Main connectors - 12 pin - for **AEB-NP** and **AES**

CONNECTOR TYPE	POWER SUPPLY AND SIGNALS	POWER SUPPLY AND SIGNALS
CODE	(A2) ZM-12P	(A4) ZH-12P
Type	12pin female straight circular	12pin female straight circular
Standard	DIN 43651	DIN 43651
Material	Metallic	Plastic reinforced with fiber glass
Cable gland	PG13,5	PG16
Recommended cable	LiYCY 12 x 0,75 mm² max 20 m (logic and power supply)	LiYCY 10 x 0,14mm² max 40 m (logic) LiYY 3 x 1mm² max 40 m (power supply)
Conductor size	0,5 mm² to 1,5 mm² - available for 12 wires	0,14 mm² to 0,5 mm² - available for 9 wires 0,5 mm² to 1,5 mm² - available for 3 wires
Connection type	to crimp	to crimp
Protection (EN 60529)	IP 67	IP 67

22.3 IO-Link connector - only for **AEB-IL**

CONNECTOR TYPE	IL IO-Link
CODE	(A) ZM-5PF
Type	5pin female straight circular
Standard	M12 coding A – IEC 61076-2-101
Material	Metallic
Cable gland	Pressure nut - cable diameter 6÷8 mm
Recommended cable	5 x 0,75 mm² max 20 m
Connection type	screw terminal
Protection (EN 60529)	IP 67

22.4 Fieldbus communication connectors - only for **AES**

CONNECTOR TYPE	BC CANopen (1)		BP PROFIBUS DP (1)		EH EtherCAT (2)
CODE	(C1) ZM-5PF	(C2) ZM-5PM	(C1) ZM-5PF/BP	(C2) ZM-5PM/BP	(C1) (C2) ZM-4PM/E
Type	5 pin female straight circular	5 pin male straight circular	5 pin female straight circular	5 pin male straight circular	4 pin male straight circular
Standard	M12 coding A – IEC 61076-2-101		M12 coding B – IEC 61076-2-101		M12 coding D – IEC 61076-2-101
Material	Metallic		Metallic		Metallic
Cable gland	Pressure nut - cable diameter 6÷8 mm		Pressure nut - cable diameter 6÷8 mm		Pressure nut - cable diameter 4÷8 mm
Cable	CANbus Standard (DR 303-1)		PROFIBUS DP Standard		Ethernet standard CAT-5
Connection type	screw terminal		screw terminal		terminal block
Protection (EN 60529)	IP67		IP 67		IP 67

(1) E-TRM-** terminators can be ordered separately - see tech table **GS500**

(2) Internally terminated

23 FASTENING BOLTS AND SEALS

	AGRCZO-*-10	AGRCZO-*-20
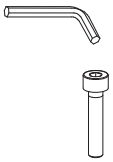	**Fastening bolts:** 4 socket head screws M10x45 class 12.9 Tightening torque = 70 Nm	**Fastening bolts:** 4 socket head screws M10x45 class 12.9 Tightening torque = 70 Nm
	Seals: 2 OR 3068 Diameter of ports A, B: Ø 14 mm 2 OR 109/70 Diameter of port X, Y: Ø 5 mm	**Seals:** 2 OR 4100 Diameter of ports A, B: Ø 22 mm 2 OR 109/70 Diameter of port X, Y: Ø 5 mm

SIZE 10

ISO 5781: 2000
Mounting surface: 5781-06-07-0-00 (see table P005)

	Mass [kg]		
	A	**AEB, AES**	**AES-EH**
AGRCZO-*-10	5,0	5,6	5,7
Option /P	+0,5		

AGRCZO-A-10
standard and **/R**

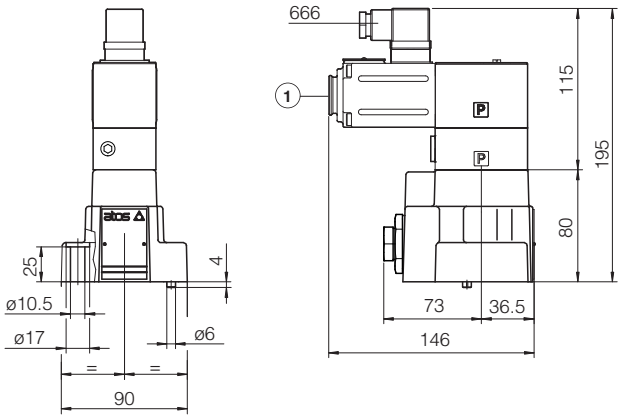

AGRCZO-AEB-NP-10
AGRCZO-AEB-IL-10
standard and **/R**

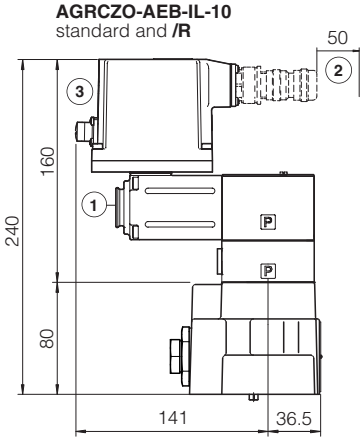

AGRCZO-AES-BC-10
AGRCZO-AES-BP-10
standard and **/R**

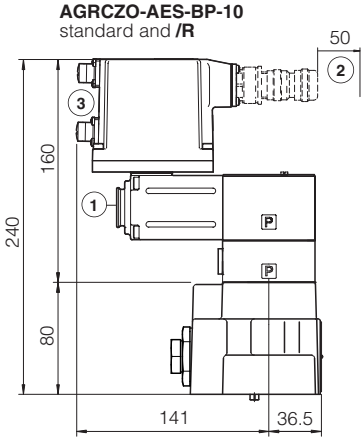

AGRCZO-AES-EH-10
standard and **/R**

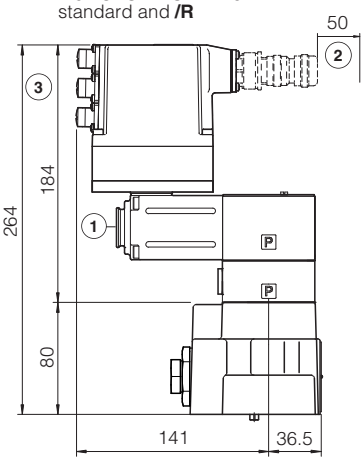

Option /P

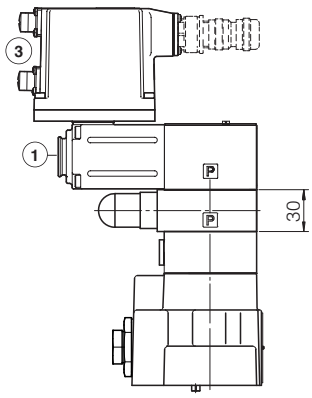

(1) = Air bleeding, see section 18
(2) = Space required for connection cable and for connector removal
(3) = The dimensions of connectors and Bluetooth adapter must be considered, see section 21.6, 21.7 and 21.8

SIZE 20

ISO 5781: 2000
Mounting surface: 5781-08-10-0-00 (see table P005)

	Mass [kg]		
	A	**AEB, AES**	**AES-EH**
AGRCZO-*-20	7,5	8,1	8,2
Option /P	+0,5		

(1) = Air bleeding, see section 18

(2) = Space required for connection cable and for connector removal

(3) = The dimensions of connectors and Bluetooth adapter must be considered, see section 21.6, 21.7 and 21.8

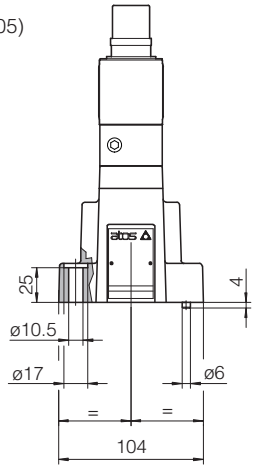

AGRCZO-A-20
standard and **/R**

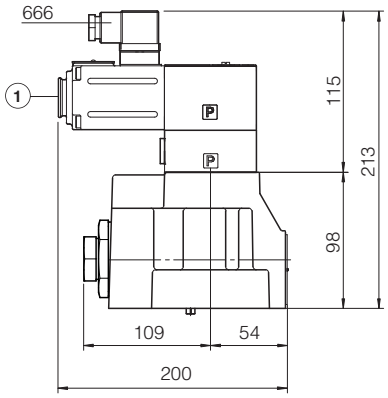

AGRCZO-AEB-NP-20
AGRCZO-AEB-IL-20
standard and **/R**

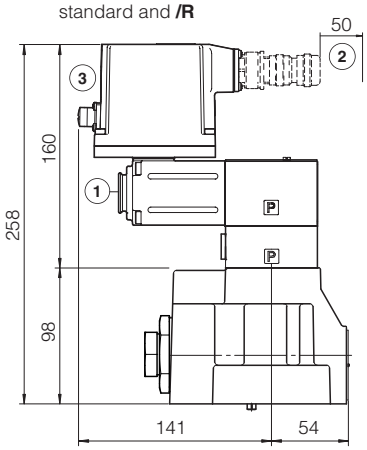

AGRCZO-AES-BC-20
AGRCZO-AES-BP-20
standard and **/R**

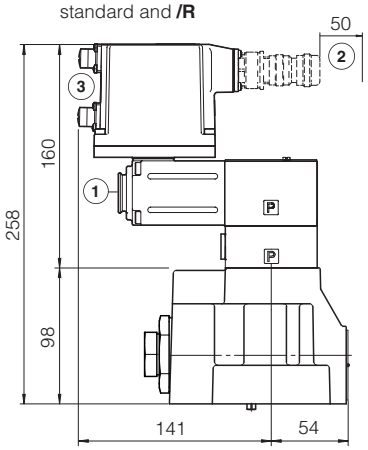

AGRCZO-AES-EH-20
standard and **/R**

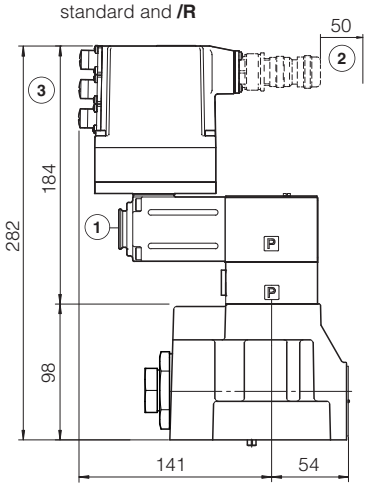

Option /P

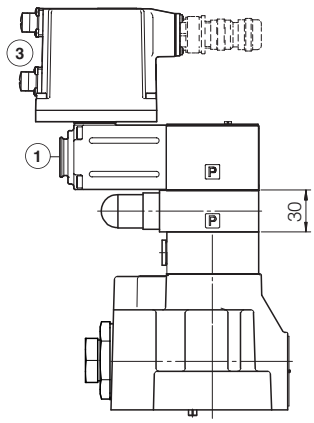

25 RELATED DOCUMENTATION

FS001	Basics for digital electrohydraulics	**K800**	Electric and electronic connectors
FS900	Operating and maintenance information for proportional valves	**P005**	Mounting surfaces for electrohydraulic valves
G010	E-MI-AC analog driver	**QB200**	Quickstart for AEB valves commissioning
G020	E-MI-AS-IR digital driver	**QF200**	Quickstart for AES valves commissioning
G030	E-BM-AS digital driver	**E-MAN-MI-AS**	E-MI-AS-IR user manual (off-board)
GS050	E-BM-AES digital driver	**E-MAN-BM-AS**	E-BM-AS user manual (off-board)
GS500	Programming tools	**E-MAN-BM-AES**	E-BM-AES user manual (off-board)
GS510	Fieldbus	**E-MAN-RI-AEB**	AEB user manual
GS520	IO-Link interface	**E-MAN-RI-AES**	AES user manual

Digital proportional pressure cartridges

piloted, without transducer - compensator, relief, reducing functions

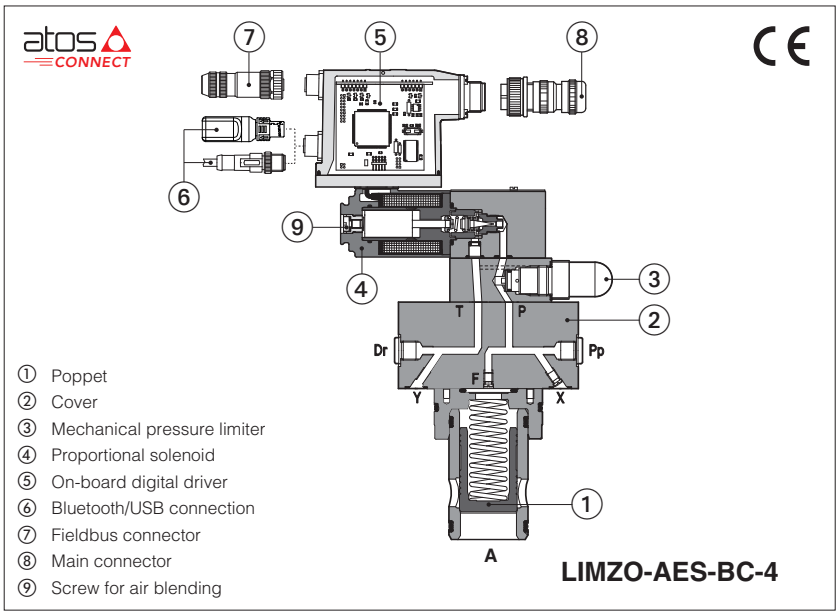

LICZO, LIMZO, LIRZO

2-way digital proportional cartridges respectively performing: pressure compensator, relief and reducing open loop functions.

A to be coupled with off-board driver.

AEB basic execution, with on-board digital driver, with analog reference signal or IO-Link interface for digital reference signals, valve settings, and real-time diagnostics.

AES full execution, with on-board digital driver which includes also fieldbus interfaces for digital reference signals, valve settings, and real-time diagnostics.

For **AEB** and **AES**, Bluetooth/USB connection is always present for valve settings via mobile App and Atos PC software

Size: **16** ÷ **80** - ISO 7368
Max flow: up to **4500 l/min**
Max pressure: **350 bar**

1 MODEL CODE

LIMZO	-	AES	-	BC	-	4	/	315	/	*	/	*	/	*	*	/	*

LIMZO
Proportional pressure cartridges, piloted
LICZO = pressure compensator
LIMZO = pressure relief
LIRZO = pressure reducing

AES
A = off-board driver, see section 5
AEB = basic on-board digital driver
AES = full on-board digital driver

BC
IO-Link interface, only for AEB, see section 9 :
NP = Not present **IL** = IO-Link
Fieldbus interfaces, only for AES, see section 10 :
BC = CANopen **EH** = EtherCAT
BP = PROFIBUS DP

4
Valve size ISO 7368:
1 = 16
2 = 25
3 = 32
4 = 40
5 = 50 (not for LIRZO)
6 = 63 (only for LIMZO)
8 = 80 (only for LIMZO)

315
Max regulated pressure:
50 = 50 bar
100 = 100 bar
210 = 210 bar
315 = 315 bar
350 = 350 bar

*****
Hydraulic options (1):
P =with on-board mechanical pressure limiter (standard for size 1, 2 and 3)
Electronic options, only for **AEB-NP** and **AES (1)**:
I = current reference input 4 ÷ 20 mA
Q = enable signal
Z = double power supply, enable, fault and monitor signals - 12 pin connector

*****
Bluetooth option, only for **AEB** and **AES (1)**, see section 8 :
T = Bluetooth adapter supplied with the valve

*****
Coil voltage, only for **A** - see section 19 :
- = standard coil for 24VDC Atos drivers
6 = optional coil for 12VDC Atos drivers
18 = optional coil for low current drivers

*****
Series number

*****
Seals material, see section 14 :
- = NBR
PE = FKM
BT = NBR low temp.

(1) For possible combined options, see section 18

2 HYDRAULIC SYMBOLS

LICZO

LICZO-A-1÷3
LICZO-A-4÷5 /P

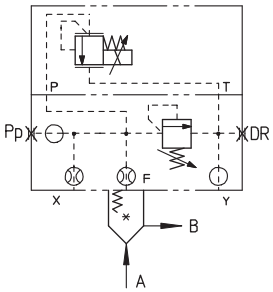

LICZO-A-4
LICZO-A-5

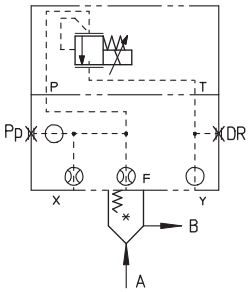

LICZO-AEB(AES)-1÷3
LICZO-AEB(AES)-4÷5 /P

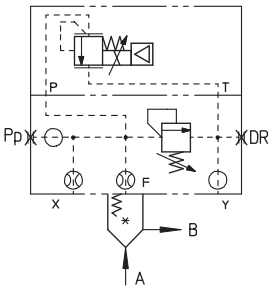

LICZO-AEB(AES)-4÷5

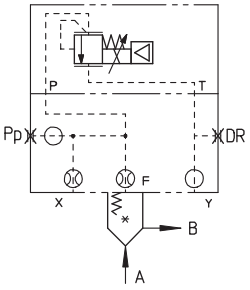

LIMZO

LIMZO-A-1÷3
LIMZO-A-4÷8 /P

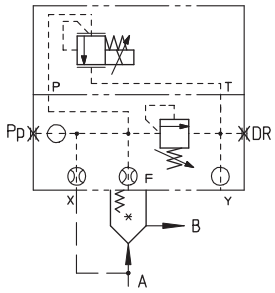

LIMZO-A-4÷8

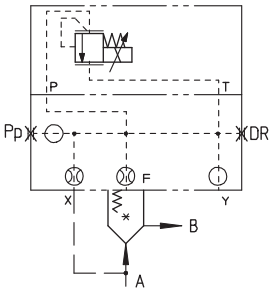

LIMZO-AEB(AES)-1÷3
LIMZO-AEB(AES)-4÷8 /P

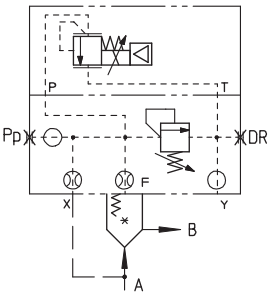

LIMZO-AEB(AES)-4÷8

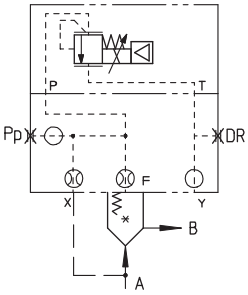

LIRZO

LIRZO-A-1÷3
LIRZO-A-4 /P

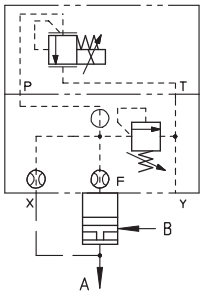

LIRZO-A-4

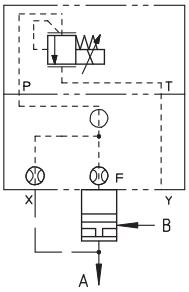

LIRZO-AEB(AES)-1÷3
LIRZO-AEB(AES)-4 /P

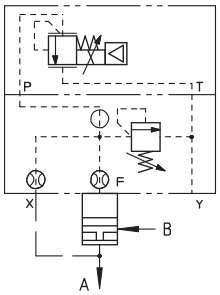

LIRZO-AEB(AES)-4

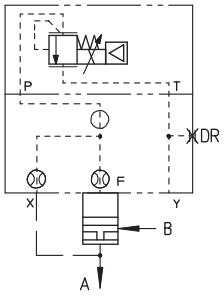

3 MODEL CODE OF CARTRIDGES

SC LI	-	32	31	2	*	/	*

Cartridge according to ISO 7368

Cartridge size ISO 7368:
16; **25**; **32**; **40**; **50**; **63**; **80**

Type of poppet:
31 = for LIMZO and LICZO
36 = for LICZO
37 = for LIRZO

Series number

Spring cracking pressure:
2 = 1,5 bar for poppet 31
3 = 3 bar for poppet 31 and 36
4 = 4 bar only for poppet 37
6 = 6 bar for poppet 31 and 36
7 = 7 bar for poppet 37 (only for size 16, 25, 32, 40)

Seals material, see section 14 :
- = NBR
PE = FKM
BT = NBR low temp.

4 TYPE OF POPPET

Type of poppet	31	36	37
Functional sketch (Hydraulic symbol)	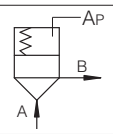	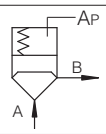	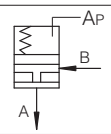
Typical section	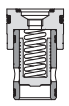	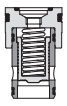	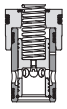
Area ratio A: A_P	**1:1**	**1:1**	**1:1**

5 OFF-BOARD ELECTRONIC DRIVERS - only for **A**

Drivers model	E-MI-AC-01F		E-MI-AS-IR		E-BM-AS-PS		E-BM-AES
Type	Analog		Digital				
Voltage supply (VDC)	12	24	12	24	12	24	24
Valve coil option	/6	std	/6	std	/6	std	std
Format	plug-in to solenoid				DIN-rail panel		
Tech table	G010		G020		G030		GS050

6 GENERAL NOTES

Atos digital proportionals valves are CE marked according to the applicable directives (e.g. Immunity and Emission EMC Directive).
Installation, wirings and start-up procedures must be performed according to the general prescriptions shown in tech table **FS900** and in the user manuals included in the E-SW-SETUP programming software.

7 VALVE SETTINGS AND PROGRAMMING TOOLS - see tech. table **GS500**

7.1 Atos CONNECT mobile App

Free downloadable App for smartphones and tablets which allows quick access to valve main functional parameters and basic diagnostic information via Bluetooth, thus avoiding physical cable connection and significantly reducing commissioning time.
Atos CONNECT supports Atos digital valve drivers equipped with E-A-BTH adapter or with built-in Bluetooth. It does not support valves with p/Q control or axis controls.

Download on the App Store

GET IT ON Google Play

7.2 E-SW-SETUP PC software

Free downloadable software for PC allows to set all valve functional parameters and to access complete diagnostic information of digital valve drivers via Bluetooth/USB service port.
Atos E-SW-SETUP PC software supports all Atos digital valve drivers and it is available at www.atos.com in MyAtos area.

WARNING: drivers USB port is not isolated! For E-C-SB-USB/M12 cable, the use of E-A-SB-USB/OPT isolator adapter is highly recommended for PC protection

Bluetooth or USB connection

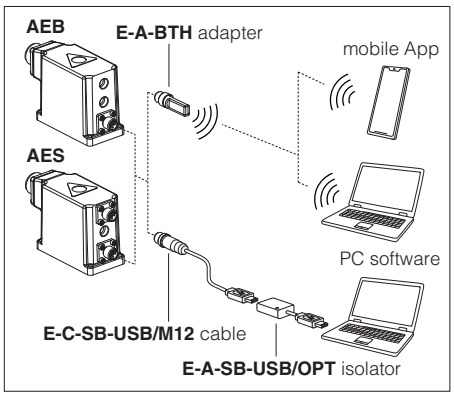

8 BLUETOOTH OPTION - see tech. table **GS500**

T option adds Bluetooth® connectivity to Atos valve drivers thanks to E-A-BTH adapter, which can be left permanently installed on-board, to allow the Bluetooth connection with the valve drivers at any time. E-A-BTH adapter can also be purchased separately and used to connect with any supported Atos digital product.
Bluetooth connection to the valve can be protected against unauthorised access by setting a personal password. The adapter leds visually indicates the status of valve driver and Bluetooth connection.

WARNING: for the list of countries where the Bluetooth adapter has been approved, see tech. table **GS500**
T option is not available for the Indian market, so the Bluetooth adapter must be ordered separately.

9 IO-LINK - only for **AEB**, see tech. table **GS520**

IO-Link allows low cost digital communication between the valve and machine central unit. The valve is directly connected to a port of an IO-Link master (point-to-point connection) via low-cost unshielded cables for digital reference, diagnostic and settings. The IO-Link master works as a hub exchanging this information with the machine central unit via fieldbus.

10 FIELDBUS - only for **AES**, see tech. table **GS510**

Fieldbus allows valve direct communication with machine control unit for digital reference, valve diagnostics and settings. These execution allow to operate the valves through fieldbus or analog signals available on the main connector.

11 GENERAL CHARACTERISTICS

Assembly position	Any position
Subplate surface finishing to ISO 4401	Acceptable roughness index: Ra ≤ 0,8, recommended Ra 0,4 – Flatness ratio 0,01/100
MTTFd valves according to EN ISO 13849	75 years, for further details see technical table P007
Ambient temperature range	**A:** **Standard** = -20°C ÷ +70°C **/PE** option = -20°C ÷ +70°C **/BT** option = -40°C ÷ +60°C **AEB, AES:** **Standard** = -20°C ÷ +60°C **/PE** option = -20°C ÷ +60°C **/BT** option = -40°C ÷ +60°C
Storage temperature range	**A:** **Standard** = -20°C ÷ +80°C **/PE** option = -20°C ÷ +80°C **/BT** option = -40°C ÷ +70°C **AEB, AES:** **Standard** = -20°C ÷ +70°C **/PE** option = -20°C ÷ +70°C **/BT** option = -40°C ÷ +70°C
Surface protection	Zinc coating with black passivation, galvanic treatment (driver housing for AEB and AES)
Corrosion resistance	Salt spray test (EN ISO 9227) > 200 h
Vibration resistance	See technical table G004 (for AEB and AES)
Compliance	CE according to EMC directive 2014/30/EU (Immunity: EN 61000-6-2; Emission: EN 61000-6-3) RoHS Directive 2011/65/EU as last update by 2015/863/EU REACH Regulation (EC) n°1907/2006

12 HYDRAULIC CHARACTERISTICS - based on mineral oil ISO VG 46 at 50 °C

Valve model		LICZO					LIMZO							LIRZO			
valve size		**1**	**2**	**3**	**4**	**5**	**1**	**2**	**3**	**4**	**5**	**6**	**8**	**1**	**2**	**3**	**4**
Max flow	[l/min]	200	400	750	1000	2000	200	400	750	1000	2000	3000	4500	160	300	550	800
Min regulated pres. at port A	[bar]	9	8,5	8	13	15	7	7	7	10,5	12	12	**(2)**	7			
Min regulated pres. at port A for /350	[bar]	11	10	10	13	16	10	10	9	12	13	13	16	12			
Max regulated pres. at port A	[bar]	50; 100; 210; 315; 350					50; 100; 210; 315; 350							50; 100; 210; 315; 350			
Response time 0-100% step signal (depending on installation) **(1)**	[ms]	100 ÷ 400					100 ÷ 450							100 ÷ 350			
Hysteresis	[% of the regulated max flow]	≤ 2					≤ 1,5							≤ 2			
Linearity	[% of the regulated max flow]	≤ 3					≤ 3							≤ 3			
Repeatability	[% of the regulated max flow]	≤ 2					≤ 2							≤ 2			

Note: above performance data refer to valves coupled with Atos electronic drivers, see section 5

(1) Average response time value; the pressure variation in consequence of a modification of the reference input signal to the valve is affected by the stiffness of the hydraulic circuit: greater is the stiffness of the circuit, faster is the dynamic response.

(2) Consult our techincal office.

13 ELECTRICAL CHARACTERISTICS

Power supplies	Nominal : +24 VDC Rectified and filtered : VRMS = 20 ÷ 32 VMAX (ripple max 10 % VPP)			
Max power consumption	**A** = 30 W **AEB**, **AES** = 50 W			
Coil voltage code	standard	option /6	option /18	
Max. solenoid current	2,6 A	3,25 A	1,5 A	
Coil resistance R at 20°C	3 ÷ 3,3 Ω	2 ÷ 2,2 Ω	13 ÷ 13,4 Ω	
Analog input signals	Voltage: range ±10 VDC (24 VMAX tolerant) Input impedance: Ri > 50 kΩ Current: range ±20 mA Input impedance: Ri = 500 Ω			
Monitor output	Output range: voltage ±5 VDC @ max 5 mA			
Enable input	Range: 0 ÷ 9 VDC (OFF state), 15 ÷ 24 VDC (ON state), 9 ÷ 15 VDC (not accepted); Input impedance: Ri > 87 kΩ			
Fault output	Output range : 0 ÷ 24 VDC (ON state ≅ VL+ [logic power supply] ; OFF state ≅ 0 V) @ max 50 mA; external negative voltage not allowed (e.g. due to inductive loads)			
Alarms	Solenoid not connected/short circuit, cable break with current reference signal, over/under temperature, current control monitoring, power supplies level			
Insulation class	H (180°) Due to the occurring surface temperatures of the solenoid coils, the European standards ISO 13732-1 and EN982 must be taken into account			
Protection degree to DIN EN60529	**A** = IP65; **AEB**, **AES** = IP66 / IP67 with mating connectors			
Duty factor	Continuous rating (ED=100%)			
Tropicalization	Tropical coating on electronics PCB			
Additional characteristics	Short circuit protection of solenoid's current supply; current control by P.I.D. with rapid solenoid switching; protection against reverse polarity of power supply			
Communication interface	USB Atos ASCII coding	IO-Link Interface and System Specification 1.1.3	CANopen EN50325-4 + DS408	PROFIBUS DP EN50170-2/IEC61158	EtherCAT IEC 61158
Communication physical layer	not insulated USB 2.0 + USB OTG	SDCI class port B	optical insulated CAN ISO11898	optical insulated RS485	Fast Ethernet, insulated 100 Base TX
Recommended wiring cable	LiYCY shielded cables, see section 24				

Note: a maximum time of 500 ms (depending on communication type) has to be considered between the driver energizing with the 24 VDC power supply and when the valve is ready to operate. During this time the current to the valve coils is switched to zero.

14 SEALS AND HYDRAULIC FLUIDS - for other fluids not included in below table, consult our technical office

Seals, recommended fluid temperature		NBR seals (standard) = -20°C ÷ +60°C (+80°C for **A**), with HFC hydraulic fluids = -20°C ÷ +50°C FKM seals (/PE option) = -20°C ÷ +80°C NBR low temp. seals (/BT option) = -40°C ÷ +60°C, with HFC hydraulic fluids = -20°C ÷ +50°C		
Recommended viscosity		20 ÷ 100 mm²/s - max allowed range 15 ÷ 380 mm²/s		
Max fluid contamination level	normal operation	ISO4406 class 18/16/13 NAS1638 class 7		see also filter section at www.atos.com or KTF catalog
	longer life	ISO4406 class 16/14/11 NAS1638 class 5		
Hydraulic fluid		**Suitable seals type**	**Classification**	**Ref. Standard**
Mineral oils		NBR, FKM, NBR low temp.	HL, HLP, HLPD, HVLP, HVLPD	DIN 51524
Flame resistant without water		FKM	HFDU, HFDR	ISO 12922
Flame resistant with water		NBR, NBR low temp.	HFC	

15 DIAGRAMS (based on mineral oil ISO VG 46 at 50 °C)

1 Regulation diagrams LIMZO
2 Regulation diagrams LICZO

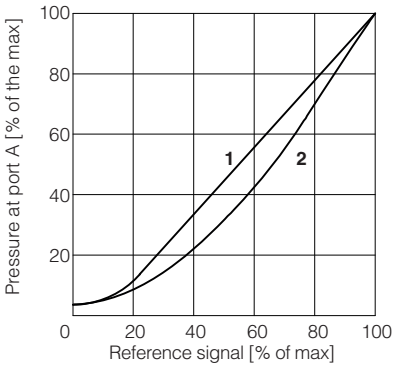

3 Pressure/flow diagrams LICZO, LIMZO

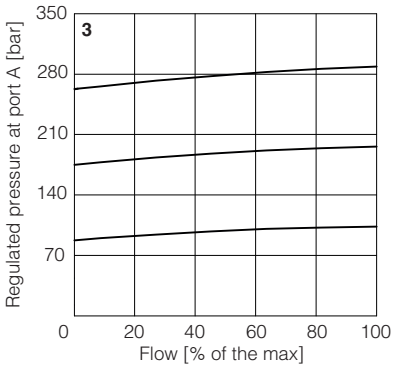

4-14 Min. pressure/flow diagrams
with zero reference signal

4 = LIMZO-*-1
5 = LIMZO-*-2
6 = LIMZO-*-3
7 = LIMZO-*-4
8 = LIMZO-*-5
9 = LIMZO-*-6
10 = LIMZO-*-8
11 = LICZO-*-1
12 = LICZO-*-2
13 = LICZO-*-3
14 = LICZO-*-4
15 = LICZO-*-5

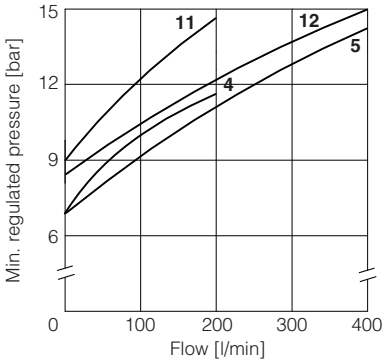

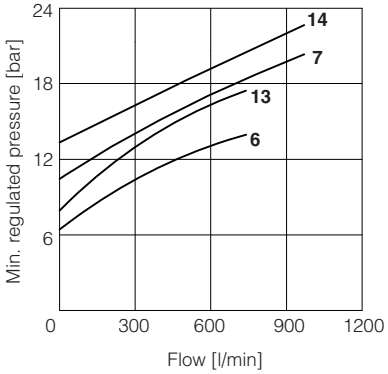

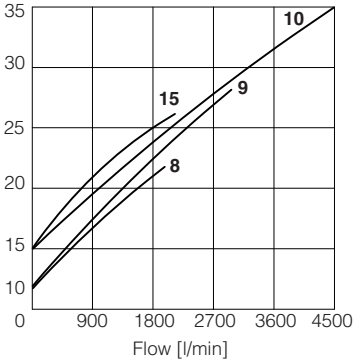

Regulation diagrams LIRZO

15 = LIRZO-A

16-19 Min. pressure/flow diagrams
with reference signal "null"

16 = LIRZO-*-1
17 = LIRZO-*-2
18 = LIRZO-*-3
19 = LIRZO-*-4

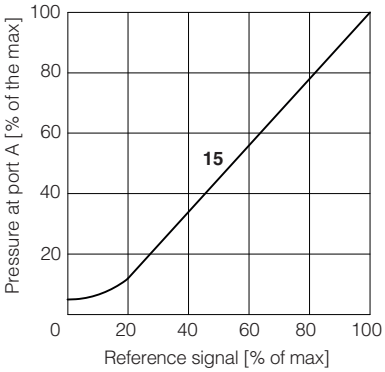

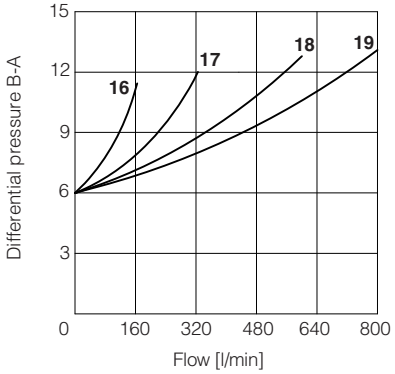

Pressure/flow diagrams

20 = LIRZO-A

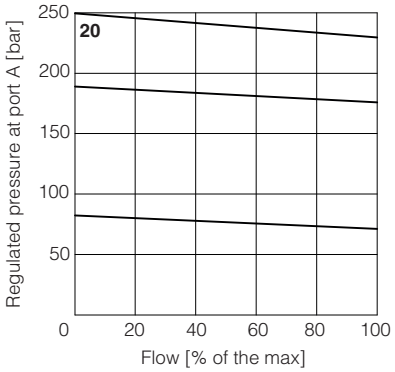

16 HYDRAULIC OPTIONS

P = This option (standard for size 1, 2 and 3) provides a mechanical pressure limiter acting as protection against overpressure. For safety reasons the factory setting of the mechanical pressure limiter is fully unloaded (min pressure).
At the first commissioning it must be set at a value lightly higher than the max pressure regulated with the proportional control.
For the pressure setting of the mechanical pressure limiter, proceed according to following steps:

- apply the max reference input signal to the valve's driver. The system pressure will not increase until the mechanical pressure limiter remains unloaded
- turn clockwise the adjustment screw ① until the system pressure will increase up to a stable value corresponding to the pressure setpoint at max reference input signal
- turn clockwise the adjustment screw ① of additional 1 or 2 turns to ensure that the mechanical pressure limiter remains closed during the proportional valve working

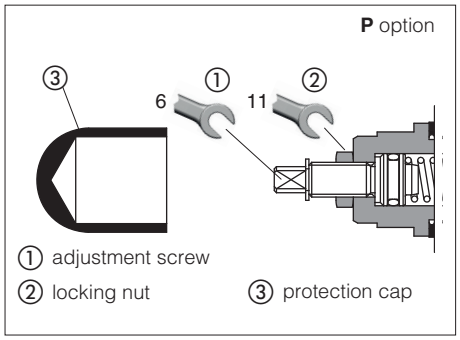

17 ELECTRONIC OPTIONS - only for **AEB-NP** and **AES**

I = This option provides 4 ÷ 20 mA current reference, instead of the standard 0 ÷ 10 VDC.
Input signal can be reconfigured via software selecting between voltage and current, within a maximum range of ±10 VDC or ±20 mA.
It is normally used in case of long distance between the machine control unit and the valve or where the reference signal can be affected by electrical noise; the valve functioning is disabled in case of reference signal cable breakage.

Q = This option permits to inhibit the valve function without removing the power supply to the driver. Upon disable command the current to the solenoid is zeroed and the valve's spool moves to rest position.
The option /Q is suggested for all cases where the valve has to be frequently inhibited during the machine cycle – see 21.5 for signal specifications.

Z = This option provides, on the 12 pin main connector, the following additional features:
Fault output signal - see 21.6
Enable input signal - see above option /Q
Power supply for driver's logics and communication - see 21.2

18 POSSIBLE COMBINED OPTIONS

Hydraulic options: all combination possible
Electronic options: /IQ, /IZ

Note: **/T** Bluetooth adapter option can be combined with all other options

19 COIL VOLTAGE OPTIONS - only for **A**

6 = Optional coil to be used with Atos drivers with power supply 12 VDC.
18 = Optional coil to be used with electronic drivers not supplied by Atos.

20 AIR BLEEDING

At the first valve commissioning the air eventually trapped inside the solenoid must be bled-off through the screw ① located at the rear side of the solenoid housing.
The presence of air may cause pressure instability and vibrations.

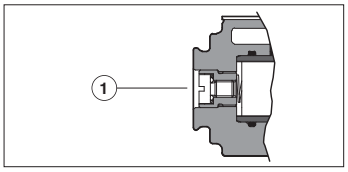

21 POWER SUPPLY AND SIGNALS SPECIFICATIONS - only for **AEB-NP** and **AES**

Generic electrical output signals of the valve (e.g. fault or monitor signals) must not be directly used to activate safety functions, like to switch-ON/OFF the machine's safety components, as prescribed by the European standards (Safety requirements of fluid technology systems and components-hydraulics, ISO 4413).

For **AEB-IL** signals see section 22

21.1 Power supply (V+ and V0)

The power supply must be appropriately stabilized or rectified and filtered: apply at least a 10000 µF/40 V capacitance to single phase rectifiers or a 4700 µF/40 V capacitance to three phase rectifiers. In case of separate power supply see 21.2.

⚠ A safety fuse is required in series to each power supply: 2,5 A time lag fuse.

21.2 Power supply for driver's logic and communication (VL+ and VL0) - only for **/Z** option

The power supply for driver's logic and communication must be appropriately stabilized or rectified and filtered: apply at least a 10000 µF/40 V capacitance to single phase rectifiers or a 4700 µF/40 V capacitance to three phase rectifiers.
The separate power supply for driver's logic on pin 9 and 10, allow to remove solenoid power supply from pin 1 and 2 maintaining active the diagnostics, USB and fieldbus communications.

⚠ A safety fuse is required in series to each driver's logic and communication power supply: 500 mA fast fuse.

21.3 Reference input signal (INPUT+)

The driver controls in closed loop the current to the valve proportionally to the external reference input signal.
Reference input signal is factory preset according to selected valve code, defaults are 0 ÷ 10 VDC for standard and 4 ÷ 20 mA for /I option.
Input signal can be reconfigured via software selecting between voltage and current, within a maximum range of ±10 VDC or ± 20 mA.
Drivers with fieldbus interface (BC, BP, EH) can be software set to receive reference signal directly from the machine control unit (fieldbus reference). Analog reference input signal can be used as on-off commands with input range 0 ÷ 24VDC.

21.4 Monitor output signal (MONITOR)

The driver generates an analog output signal (MONITOR) proportional to the actual coil current of the valve; the monitor output signal can be software set to show other signals available in the driver (e.g. analog reference, fieldbus reference).
Monitor output signal is factory preset according to selected valve code, default settings is 0 ÷ 5 VDC (1V = 1A).
Output signal can be reconfigured via software, within a maximum range of ±5 VDC.

21.5 Enable input signal (ENABLE) - not for standard

To enable the driver, supply a 24 VDC on pin 3 (pin C): Enable input signal allows to enable/disable the current supply to the solenoid, without removing the electrical power supply to the driver; it is used to active the communication and the other driver functions when the valve must be disabled for safety reasons. This condition **does not comply** with norms IEC 61508 and ISO 13849.
Enable input signal can be used as generic digital input by software selection.

21.6 Fault output signal (FAULT) - only for **/Z** option

Fault output signal indicates fault conditions of the driver (solenoid short circuits/not connected, reference signal broken for 4 ÷ 20 mA input, etc.).
Fault presence corresponds to 0 VDC, normal working corresponds to 24 VDC.
Fault status is not affected by the Enable input signal.

22 IO-LINK SIGNALS SPECIFICATIONS - only for **AEB-IL**

22.1 Power supply for IO-Link communication (L+ and L-)

The IO-Link master provides dedicated 24 VDC power supply for IO-Link communication.
Maximum power consumption: 2 W
Internal electrical isolation of power L+, L- from P24, N24

22.2 Power supply for driver's logic and valve regulation (P24 and N24)

The IO-Link master provides dedicated 24 VDC power supply for valve regulation, logics and diagnostics.
Maximum power consumption: 50 W
Internal electrical isolation of power P24, N24 from L+, L-

22.3 IO-Link data line (C/Q)

C/Q signal is used to establish communication between IO-Link master and valve.

23 ELECTRONIC CONNECTIONS

23.1 Main connector signals - 7 pin (A1) Standard and /Q option - for AEB-NP and AES

PIN	Standard	/Q	TECHNICAL SPECIFICATIONS	NOTES
A	**V+**		Power supply 24 VDC	Input - power supply
B	**V0**		Power supply 0 VDC	Gnd - power supply
C	**AGND**		Analog ground	Gnd - analog signal
		ENABLE	Enable (24 VDC) or disable (0 VDC) the driver, referred to V0	Input - on/off signal
D	**INPUT+**		Reference input signal: ±10 VDC / ±20 mA maximum range Defaults are 0 ÷ 10 VDC for standard and 4 ÷ 20 mA for /I option	Input - analog signal **Software selectable**
E	**INPUT-**		Negative reference input signal for INPUT+	Input - analog signal
F	**MONITOR** referred to: AGND | V0		Monitor output signal: ±5 VDC maximum range Default is 0 ÷ 5 VDC (1V = 1A)	Output - analog signal **Software selectable**
G	**EARTH**		Internally connected to driver housing	

23.2 Main connector signals - 12 pin (A2) /Z option - for AEB-NP and AES

PIN	/Z	TECHNICAL SPECIFICATIONS	NOTES
1	**V+**	Power supply 24 VDC	Input - power supply
2	**V0**	Power supply 0 VDC	Gnd - power supply
3	**ENABLE**	Enable (24 VDC) or disable (0 VDC) the driver, referred to VL0	Input - on/off signal
4	**INPUT+**	Reference input signal: ±10 VDC / ±20 mA maximum range Defaults are 0 ÷ 10 VDC for standard and 4 ÷ 20 mA for /I option	Input - analog signal **Software selectable**
5	**INPUT-**	Negative reference input signal for INPUT+	Input - analog signal
6	**MONITOR**	Monitor output signal: ±5 VDC maximum range, referred to VL0 Default is 0 ÷ 5 VDC (1V = 1A)	Output - analog signal **Software selectable**
7	**NC**	Do not connect	
8	**NC**	Do not connect	
9	**VL+**	Power supply 24 VDC for driver's logic and communication	Input - power supply
10	**VL0**	Power supply 0 VDC for driver's logic and communication	Gnd - power supply
11	**FAULT**	Fault (0 VDC) or normal working (24 VDC), referred to VL0	Output - on/off signal
PE	**EARTH**	Internally connected to driver housing	

Note: do not disconnect VL0 before VL+ when the driver is connected to PC USB port

23.3 IO-Link connector signals - M12 - 5 pin - Coding A, port class B (A) only for AEB-IL

PIN	SIGNAL	TECHNICAL SPECIFICATIONS	NOTES
1	**L+**	Power supply 24 VDC for IO-Link communication	Input - power supply
2	**P24**	Power supply 24 VDC for valve regulation, logics and diagnostics	Input - power supply
3	**L-**	Power supply 0 VDC for IO-Link communication	Gnd - power supply
4	**C/Q**	IO-Link data line	Input / Output - signal
5	**N24**	Power supply 0 VDC for valve regulation, logics and diagnostics	Gnd - power supply

Note: L+, L- and P24, N24 are electrically isolated

23.4 Communication connectors - for AEB (B) and AES (B) - (C)

(B) **USB connector - M12 - 5 pin** always present

PIN	SIGNAL	TECHNICAL SPECIFICATION (1)
1	**+5V_USB**	Power supply
2	**ID**	Identification
3	**GND_USB**	Signal zero data line
4	**D-**	Data line -
5	**D+**	Data line +

(C1) **BC fieldbus execution, connector - M12 - 5 pin (2)**

PIN	SIGNAL	TECHNICAL SPECIFICATION (1)
1	**CAN_SHLD**	Shield
2	**NC**	do not connect
3	**CAN_GND**	Signal zero data line
4	**CAN_H**	Bus line (high)
5	**CAN_L**	Bus line (low)

(C2) **BP fieldbus execution, connector - M12 - 5 pin (2)**

PIN	SIGNAL	TECHNICAL SPECIFICATION (1)
1	**+5V**	Termination supply signal
2	**LINE-A**	Bus line (high)
3	**DGND**	Data line and termination signal zero
4	**LINE-B**	Bus line (low)
5	**SHIELD**	

(1) Shield connection on connector's housing is recommended

(C3) (C4) **EH fieldbus execution, connector - M12 - 4 pin (2)**

PIN	SIGNAL	TECHNICAL SPECIFICATION (1)
1	**TX+**	Transmitter
2	**RX+**	Receiver
3	**TX-**	Transmitter
4	**RX-**	Receiver
Housing	**SHIELD**	

(2) Only for **AES** execution

23.5 Solenoid connection - only for A

PIN	SIGNAL	TECHNICAL SPECIFICATION	Connector code 666
1	**COIL**	Power supply	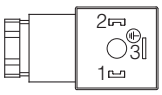
2	**COIL**	Power supply	
3	**GND**	Ground	

23.6 AEB-NP connections layout

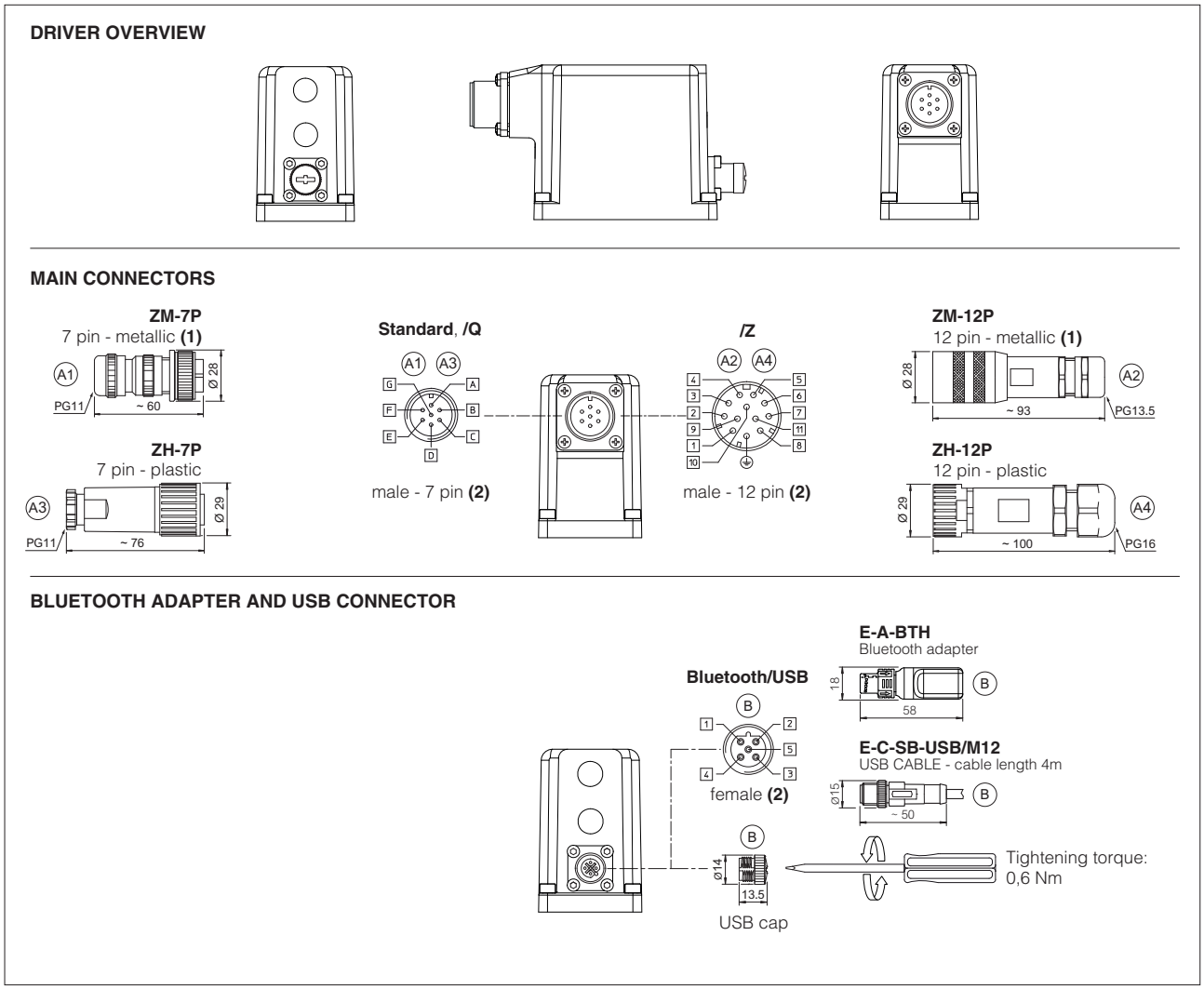

(1) Use of metallic connectors is strongly recommended in order to fulfill EMC requirements **(2)** Pin layout always referred to driver's view

23.7 AEB-IL connections layout

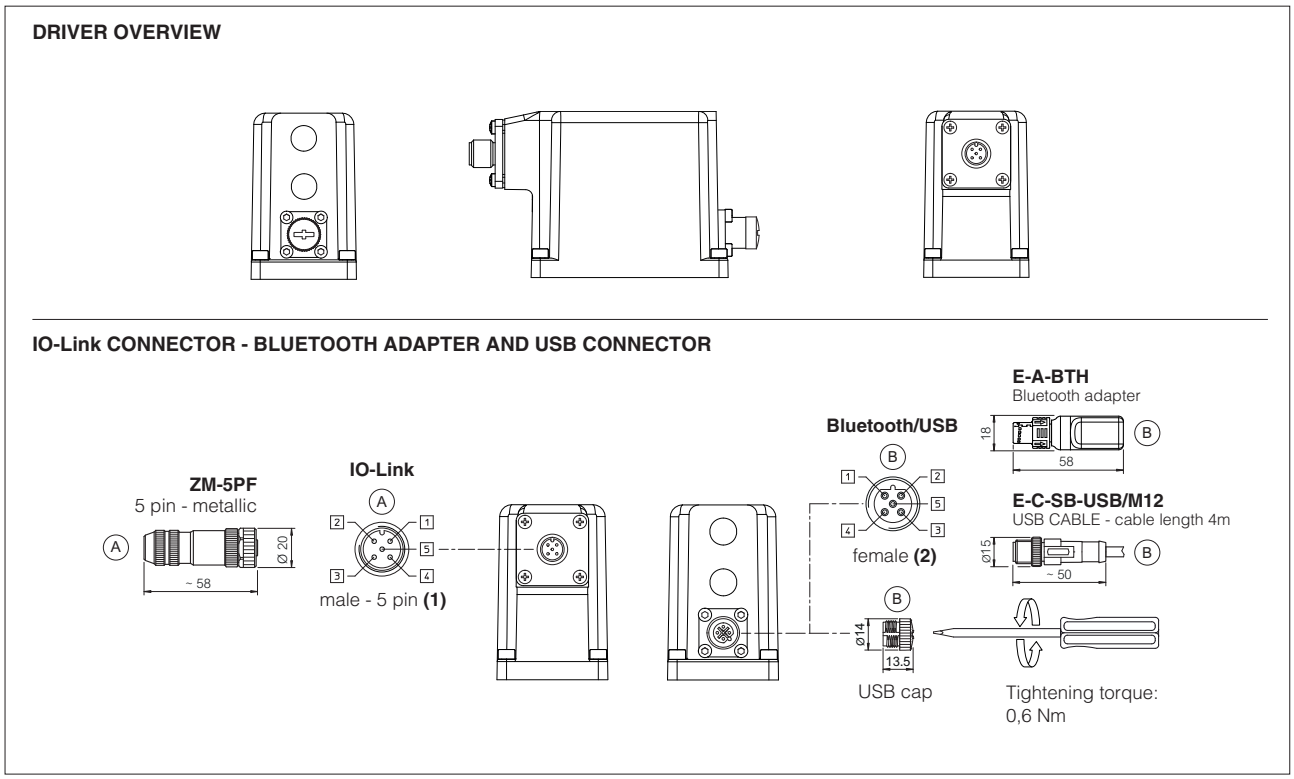

(1) Use of metallic connectors is strongly recommended in order to fulfill EMC requirements **(2)** Pin layout always referred to driver's view

23.8 AES connections layout

DRIVER OVERVIEW

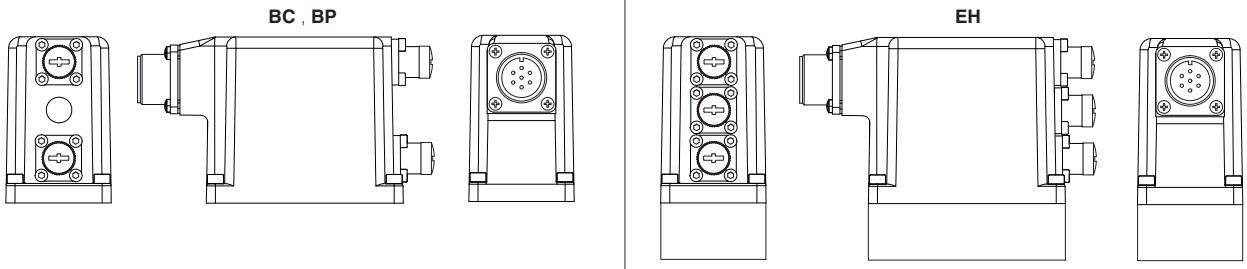

MAIN CONNECTORS

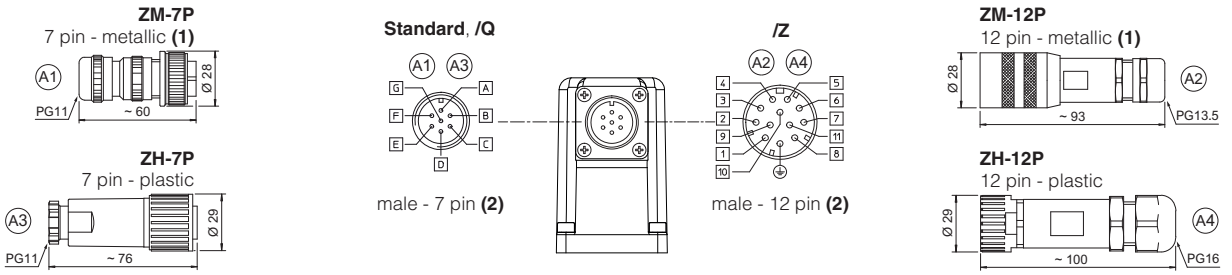

FIELDBUS CONNECTORS

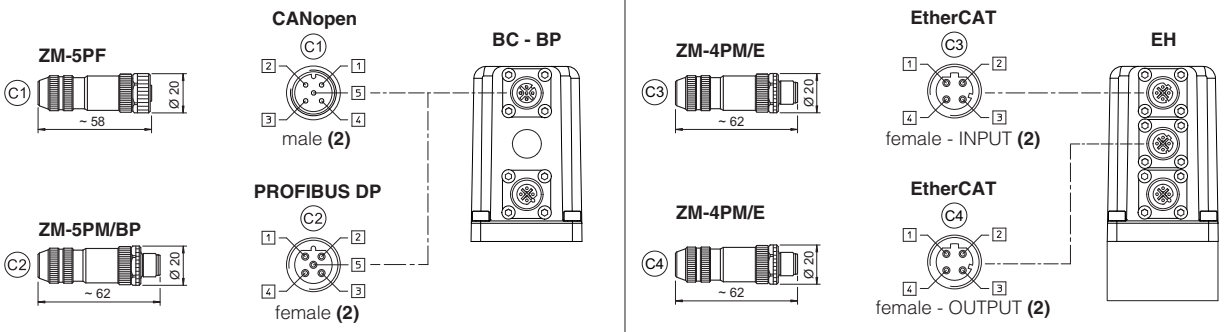

BLUETOOTH ADAPTER AND USB CONNECTOR

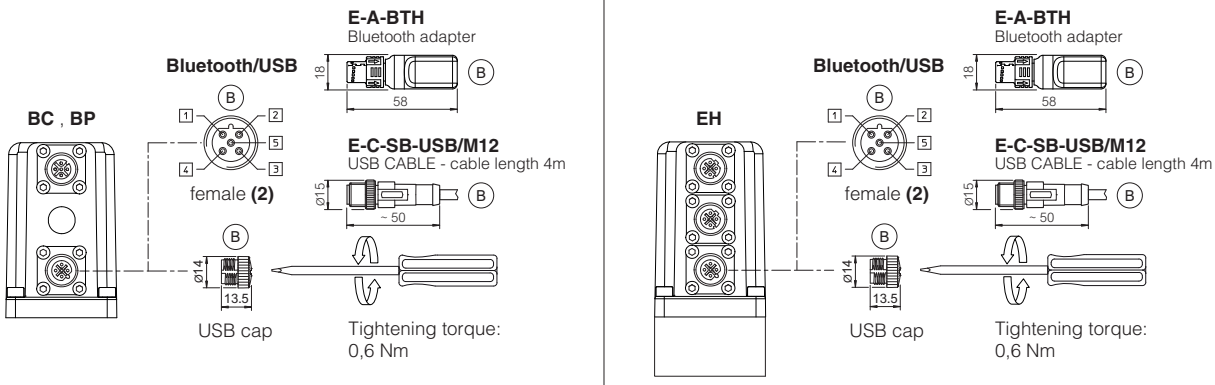

(1) Use of metallic connectors is strongly recommended in order to fulfill EMC requirements **(2)** Pin layout always referred to driver's view

24 CONNECTORS CHARACTERISTICS - to be ordered separately

24.1 Main connectors - 7 pin - for AEB-NP and AES

CONNECTOR TYPE	POWER SUPPLY AND SIGNALS	POWER SUPPLY AND SIGNALS
CODE	A1 ZM-7P	A3 ZH-7P
Type	7pin female straight circular	7pin female straight circular
Standard	According to MIL-C-5015	According to MIL-C-5015
Material	Metallic	Plastic reinforced with fiber glass
Cable gland	PG11	PG11
Recommended cable	LiYCY 7 x 0,75 mm² max 20 m (logic and power supply) or LiYCY 7 x 1 mm² max 40 m (logic and power supply)	LiYCY 7 x 0,75 mm² max 20 m (logic and power supply) or LiYCY 7 x 1 mm² max 40 m (logic and power supply)
Conductor size	up to 1 mm² - available for 7 wires	up to 1 mm² - available for 7 wires
Connection type	to solder	to solder
Protection (EN 60529)	IP 67	IP 67

24.2 Main connectors - 12 pin - for AEB-NP and AES

CONNECTOR TYPE	POWER SUPPLY AND SIGNALS	POWER SUPPLY AND SIGNALS
CODE	A2 ZM-12P	A4 ZH-12P
Type	12pin female straight circular	12pin female straight circular
Standard	DIN 43651	DIN 43651
Material	Metallic	Plastic reinforced with fiber glass
Cable gland	PG13,5	PG16
Recommended cable	LiYCY 12 x 0,75 mm² max 20 m (logic and power supply)	LiYCY 10 x 0,14mm² max 40 m (logic) LiYY 3 x 1mm² max 40 m (power supply)
Conductor size	0,5 mm² to 1,5 mm² - available for 12 wires	0,14 mm² to 0,5 mm² - available for 9 wires 0,5 mm² to 1,5 mm² - available for 3 wires
Connection type	to crimp	to crimp
Protection (EN 60529)	IP 67	IP 67

24.3 IO-Link connector - only for AEB-IL

CONNECTOR TYPE	IL IO-Link
CODE	A ZM-5PF
Type	5pin female straight circular
Standard	M12 coding A – IEC 61076-2-101
Material	Metallic
Cable gland	Pressure nut - cable diameter 6÷8 mm
Recommended cable	5 x 0,75 mm² max 20 m
Connection type	screw terminal
Protection (EN 60529)	IP 67

24.4 Fieldbus communication connectors - only for AES

CONNECTOR TYPE	BC CANopen (1)		BP PROFIBUS DP (1)		EH EtherCAT (2)
CODE	C1 ZM-5PF	C2 ZM-5PM	C1 ZM-5PF/BP	C2 ZM-5PM/BP	C1 C2 ZM-4PM/E
Type	5 pin female straight circular	5 pin male straight circular	5 pin female straight circular	5 pin male straight circular	4 pin male straight circular
Standard	M12 coding A – IEC 61076-2-101		M12 coding B – IEC 61076-2-101		M12 coding D – IEC 61076-2-101
Material	Metallic		Metallic		Metallic
Cable gland	Pressure nut - cable diameter 6÷8 mm		Pressure nut - cable diameter 6÷8 mm		Pressure nut - cable diameter 4÷8 mm
Cable	CANbus Standard (DR 303-1)		PROFIBUS DP Standard		Ethernet standard CAT-5
Connection type	screw terminal		screw terminal		terminal block
Protection (EN 60529)	IP67		IP 67		IP 67

(1) E-TRM-** terminators can be ordered separately - see tech table **GS500**

(2) Internally terminated

25 FASTENING BOLTS AND SEALS

Type	Size	Fastening bolts	Seals
LIMZO LICZO LIRZO	**1** = 16	4 socket head screws M8x45 class 12.9 Tightening torque = 35 Nm	2 OR 108
	2 = 25	4 socket head screws M12x45 class 12.9 Tightening torque = 125 Nm	2 OR 108
	3 = 32	4 socket head screws M16x55 class 12.9 Tightening torque = 300 Nm	2 OR 2043
	4 = 40	4 socket head screws M20x70 class 12.9 Tightening torque = 600 Nm	2 OR 3043
LIMZO LICZO	**5** = 50	4 socket head screws M20x80 class 12.9 Tightening torque = 600 Nm	2 OR 3043
LIMZO	**6** = 63	4 socket head screws M30x90 class 12.9 Tightening torque = 2100 Nm	2 OR 3050
	8 = 80	8 socket head screws M24x90 class 12.9 Tightening torque = 1000 Nm	2 OR 4075

26 COVERS DIMENSIONS [mm]

Size	AxA	øB	C	D	Port Pp - Dr
1 = 16	65x80	3	4	40	-
2 = 25	85x85	5	6	40	-
3 = 32	100x100	5	6	50	-
4 = 40	125x125	5	6	60	G 1/4”
5 = 50	140x140	6	4	70	G 1/4”
6 = 63	180x180	6	4	80	G 3/8”
8 = 80	ø250	8	6	80	G 3/8”

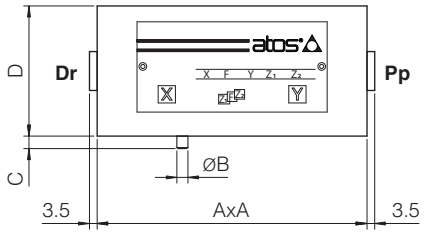

Notes:
size 1 cover is not squared but retangular, dimensions 65x80
size 8 cover is not squared but circular, dimension ø250

27 INSTALLATION DIMENSIONS [mm]

A version for off-board driver

Mass [kg]			
LICZO, LIMZO, LIRZO			Cartridge
Size	Standard	Option /P	SC LI
1 = 16	3,3	-	0,2
2 = 25	4,0	-	0,5
3 = 32	5,3	-	0,9
4 = 40	10,7	11,7	1,7
5 = 50	14,2	15,2	2,9
6 = 63	23,7	24,7	6,7
8 = 80	32,3	33,3	13,1

LICZO-A-1 LIMZO-A-1 LIRZO-A-1
LICZO-A-2 LIMZO-A-2 LIRZO-A-2
LICZO-A-3 LIMZO-A-3 LIRZO-A-3

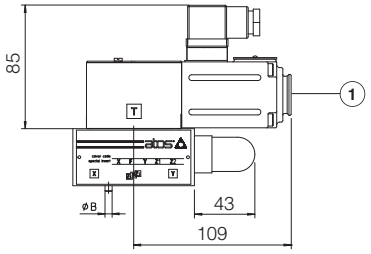

LICZO-A-4 LIMZO-A-4 LIRZO-A-4
LICZO-A-5 LIMZO-A-5
LIMZO-A-6

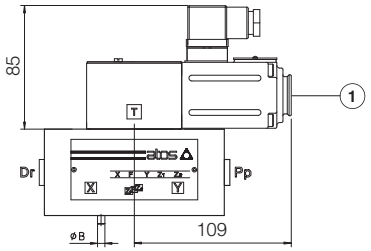

LICZO-A-4/P LIMZO-A-4/P LIRZO-A-4/P
LICZO-A-5/P LIMZO-A-5/P
LIMZO-A-6/P

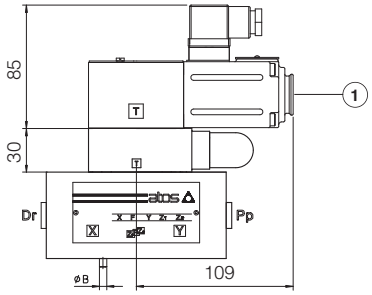

LIMZO-A-8

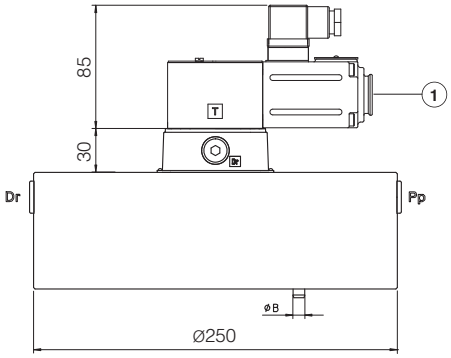

LIMZO-A-8/P

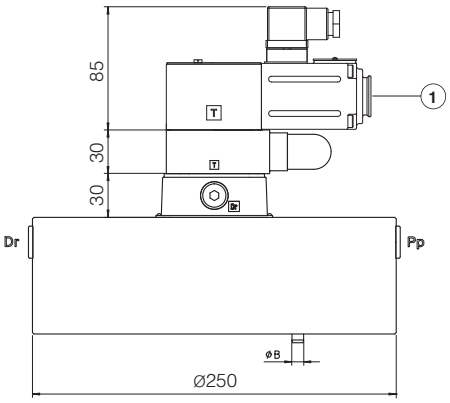

(1) = Air bleeding, see section 20

Note: for mounting surface and cavity dimensions, see tech. table P006

AEB and **AES** version for on-board driver

Mass [kg]			
LICZO, LIMZO, LIRZO			Cartridge
Size	Standard	Option /P	SC LI
1 = 16	4,0	-	0,2
2 = 25	4,5	-	0,5
3 = 32	5,8	-	0,9
4 = 40	11,2	12,2	1,7
5 = 50	14,7	15,7	2,9
6 = 63	24,2	25,2	6,7
8 = 80	32,8	33,8	13,1

LICZO-AE*-1 LIMZO-AE*-1 LIRZO-AE*-1
LICZO-AE*-2 LIMZO-AE*-2 LIRZO-AE*-2
LICZO-AE*-3 LIMZO-AE*-3 LIRZO-AE*-3

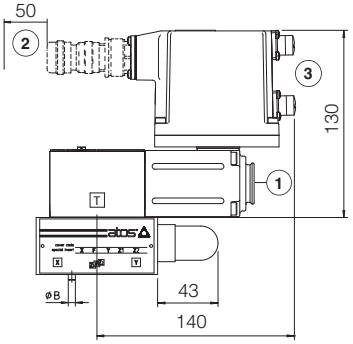

LICZO-AE*-4 LIMZO-AE*-4 LIRZO-AE*-4
LICZO-AE*-5 LIMZO-AE*-5
LIMZO-AE*-6

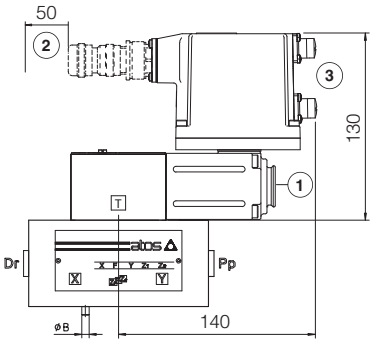

LICZO-AE*-4/P LIMZO-AE*-4/P LIRZO-AE*-4/P
LICZO-AE*-5/P LIMZO-AE*-5/P
LIMZO-AE*-6/P

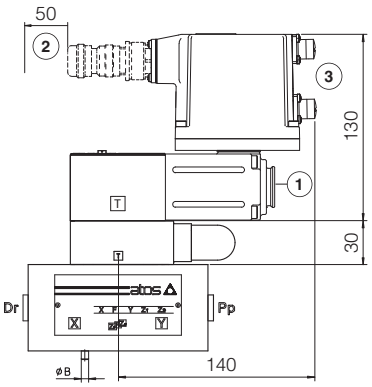

LIMZO-AE*-8

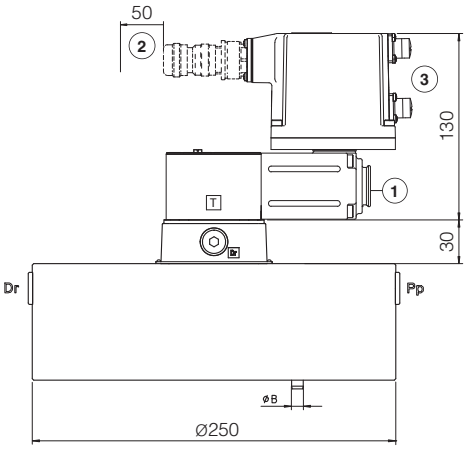

LIMZO-AE*-8/P

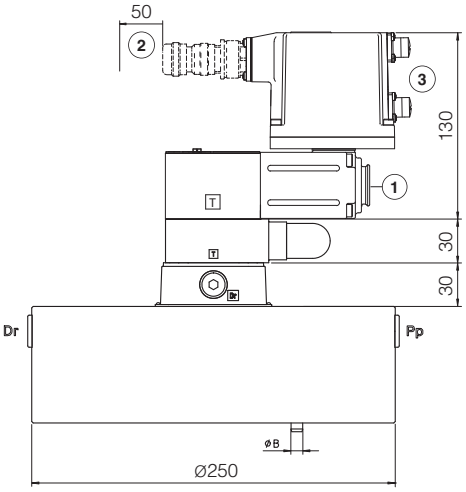

(1) = Air bleeding, see section 20
(2) = Space required for connection cable and for connector removal
(3) = The dimensions of connectors and Bluetooth adapter must be considered, see section 23.6, 23.7 and 23.8

Note: for mounting surface and cavity dimensions, see tech. table P006

AES-EH version for on-board driver

Mass [kg]			
LICZO, LIMZO, LIRZO			Cartridge
Size	Standard	Option /P	SC LI
1 = 16	4,1	-	0,2
2 = 25	4,6	-	0,5
3 = 32	5,9	-	0,9
4 = 40	11,3	12,3	1,7
5 = 50	14,8	15,8	2,9
6 = 63	24,3	25,3	6,7
8 = 80	32,9	33,9	13,1

LICZO-AES-EH-1 LIMZO-AES-EH-1 LIRZO-AES-EH-1
LICZO-AES-EH-2 LIMZO-AES-EH-2 LIRZO-AES-EH-2
LICZO-AES-EH-3 LIMZO-AES-EH-3 LIRZO-AES-EH-3

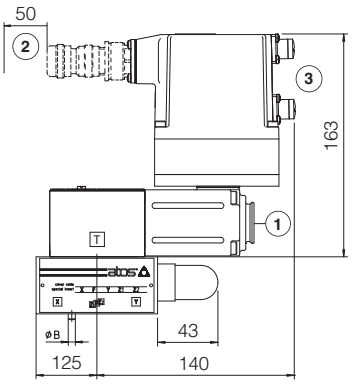

LICZO-AES-EH-4 LIMZO-AES-EH-4 LIRZO-AES-EH-4
LICZO-AES-EH-5 LIMZO-AES-EH-5
LIMZO-AES-EH-6

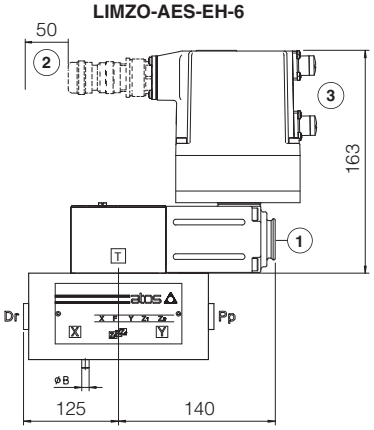

LICZO-AES-EH-4/P LIMZO-AES-EH-4/P LIRZO-AES-EH-4/P
LICZO-AES-EH-5/P LIMZO-AES-EH-5/P
LIMZO-AES-EH-6/P

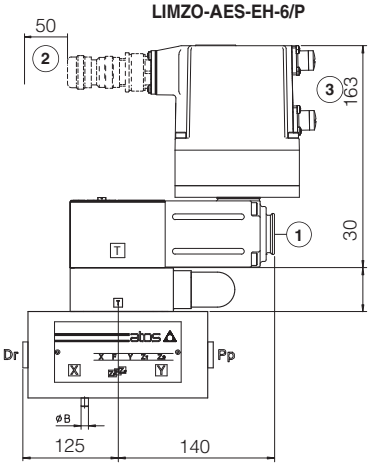

LIMZO-AES-EH-8

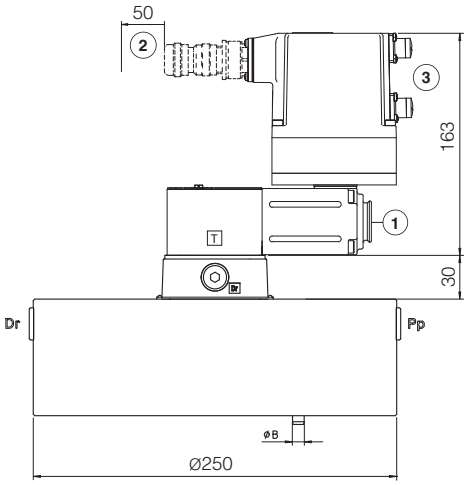

LIMZO-AES-EH-8/P

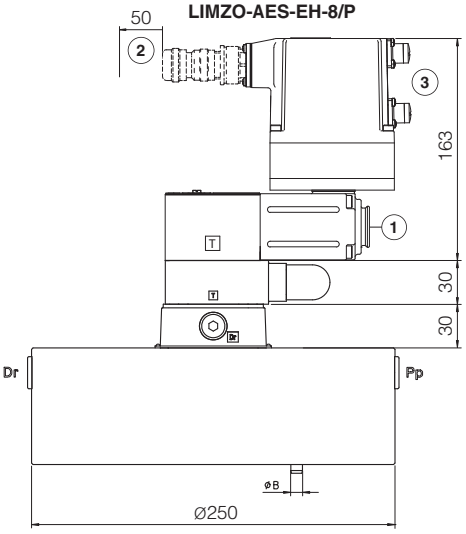

(1) = Air bleeding, see section 20
(2) = Space required for connection cable and for connector removal
(3) = The dimensions of connectors and Bluetooth adapter must be considered, see section 23.6, 23.7 and 23.8

Note: for mounting surface and cavity dimensions, see tech. table P006

28 RELATED DOCUMENTATION

FS001	Basics for digital electrohydraulics	**K800**	Electric and electronic connectors
FS900	Operating and maintenance information for proportional valves	**P006**	Mounting surfaces and cavities for cartridge valves
G010	E-MI-AC analog driver	**QB220**	Quickstart for AEB valves commissioning
G020	E-MI-AS-IR digital driver	**QF220**	Quickstart for AES valves commissioning
G030	E-BM-AS digital driver	**E-MAN-MI-AS**	E-MI-AS-IR user manual (off-board)
GS050	E-BM-AES digital driver	**E-MAN-BM-AS**	E-BM-AS user manual (off-board)
GS500	Programming tools	**E-MAN-BM-AES**	E-BM-AES user manual (off-board)
GS510	Fieldbus	**E-MAN-RI-AEB**	AEB user manual
GS520	IO-Link interface	**E-MAN-RI-AES**	AES user manual

Digital proportional reducing valves

3-way, direct, without transducer

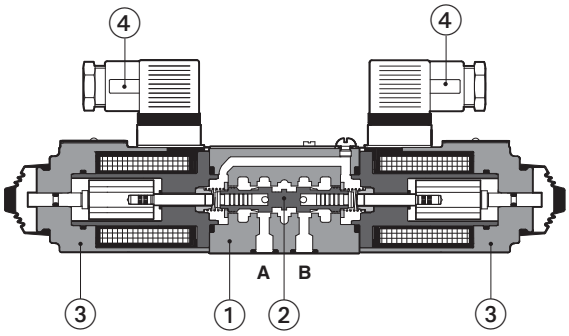

DHRZO-A-012/25

① Valve body
② Spool
③ Proportional solenoid
④ Connector

DHRZO-A, DHRZO-AEB, DHRZO-AES

3 way, direct, digital proportional reducing valves for pressure open loop controls.

A to be coupled with off-board drivers.

AEB basic execution, with on-board digital driver, with analog reference signal or IO-Link interface for digital reference signal, valve settings, and real-time diagnostics.

AES full execution, with on-board digital driver which includes also fieldbus interfaces for digital reference signal, valve settings, and real-time diagnostics.

They provide the pressure reduction on ports A, or B, or A and B, depending on the valve model.

The direct execution performs low internal leakages, fast response and low hysteresis.

For **AEB** and **AES**, Bluetooth/USB connection is always present for valve settings via mobile App and Atos PC software.

Size: **06** - ISO 4401
Max flow: **24 l/min**
Max pressure: **25 bar**

1 MODEL CODE

DHRZO	-	AEB	-	NP	-	010	/	25	/	*	/	*	/	*	*	/	*

DHRZO: Proportional pressure reducing valve, direct

AEB:
A = off-board driver, see section 3
AEB = basic on-board digital driver
AES = full on-board digital driver

NP:
IO-Link interface, only for AEB, see section 7 :
NP = Not present **IL** = IO-Link
Fieldbus interfaces, only for AES, see section 8 :
BC = CANopen **EH** = EtherCAT
BP = PROFIBUS DP

010:
Configuration:
010 = reduced pressure on port A
012 = reduced pressure on port A and B

25:
Max regulated pressure:
25 = 25 bar

(1) Possible combined options: see section 15

*****:
Hydraulic options (1):
For configuration **010**:
B = reduced pressure on port B, solenoid at side of port A
For configuration **012**:
B = solenoid with on-board digital driver at side of port A
Electronic options, only for **AEB-NP** and **AES (1)**:
I = current reference input 4÷20 mA
Q = enable signal
Z = double power supply, enable, fault and monitor signals - 12 pin connector

*****:
Bluetooth option, only for **AEB** and **AES (1)**, see section 6 :
T = Bluetooth adapter supplied with the valve

*****:
Coil voltage, only for **A** - see section 16 :
- = standard coil for 24VDC Atos drivers
6 = optional coil for 12VDC Atos drivers
18 = optional coil for low current drivers

*****: Series number

*****:
Seals material, see section 12 :
- = NBR
PE = FKM
BT = NBR low temp.

2 HYDRAULIC SYMBOLS (representation according to ISO 1219-1)

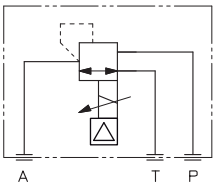

DHRZO-*-010/25*

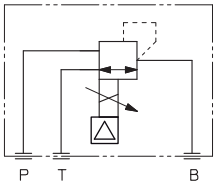

DHRZO-*-010/25/B*

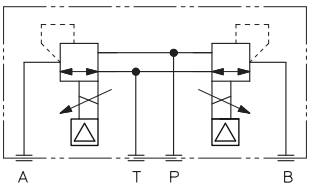

DHRZO-*-012/25*

Hydraulic symbols are represented with on-board digital driver

3 OFF-BOARD ELECTRONIC DRIVERS - only for **A**

Drivers model	E-MI-AC-01F		E-MI-AS-IR		E-BM-AS-PS		E-BM-AES
Type	Analog		Digital				
Voltage supply (VDC)	12	24	12	24	12	24	24
Valve coil option	/6	std	/6	std	/6	std	std
Format	plug-in to solenoid				DIN-rail panel		
Tech table	G010		G020		G030		GS050

4 GENERAL NOTES

Atos digital proportionals valves are CE marked according to the applicable directives (e.g. Immunity and Emission EMC Directive).
Installation, wirings and start-up procedures must be performed according to the general prescriptions shown in tech table **FS900** and in the user manuals included in the E-SW-SETUP programming software.

5 VALVE SETTINGS AND PROGRAMMING TOOLS - see tech. table **GS500**

5.1 Atos CONNECT mobile App

Free downloadable App for smartphones and tablets which allows quick access to valve main functional parameters and basic diagnostic information via Bluetooth, thus avoiding physical cable connection and significantly reducing commissioning time.
Atos CONNECT supports Atos digital valve drivers equipped with E-A-BTH adapter or with built-in Bluetooth. It does not support valves with p/Q control or axis controls.

Download on the App Store

GET IT ON Google Play

5.2 E-SW PC software

Free downloadable software for PC allows to set all valve functional parameters and to access complete diagnostic information of digital valve drivers via Bluetooth/USB service port.
Atos E-SW-SETUP PC software supports all Atos digital valve drivers and it is available at www.atos.com in MyAtos area.

WARNING: drivers USB port is not isolated! For E-C-SB-USB/M12 cable, the use of E-A-SB-USB/OPT isolator adapter is highly recommended for PC protection

Bluetooth or USB connection

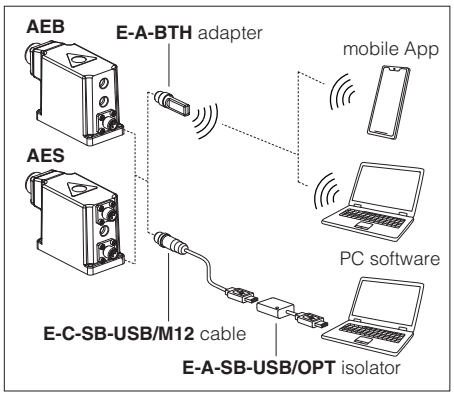

6 BLUETOOTH OPTION - see tech. table **GS500**

T option adds Bluetooth® connectivity to Atos valve drivers thanks to E-A-BTH adapter, which can be left permanently installed on-board, to allow the Bluetooth connection with the valve drivers at any time. E-A-BTH adapter can also be purchased separately and used to connect with any supported Atos digital product.
Bluetooth connection to the valve can be protected against unauthorised access by setting a personal password. The adapter leds visually indicates the status of valve driver and Bluetooth connection.

WARNING: for the list of countries where the Bluetooth adapter has been approved, see tech. table **GS500**
T option is not available for the Indian market, so the Bluetooth adapter must be ordered separately.

7 IO-LINK - only for **AEB**, see tech. table **GS520**

IO-Link allows low cost digital communication between the valve and machine central unit. The valve is directly connected to a port of an IO-Link master (point-to-point connection) via low-cost unshielded cables for digital reference, diagnostic and settings. The IO-Link master works as a hub exchanging this information with the machine central unit via fieldbus.

8 FIELDBUS - only for **AES**, see tech. table **GS510**

Fieldbus allows valve direct communication with machine control unit for digital reference, valve diagnostics and settings. These execution allow to operate the valves through fieldbus or analog signals available on the main connector.

9 GENERAL CHARACTERISTICS

Assembly position	Any position
Subplate surface finishing to ISO 4401	Acceptable roughness index: Ra ≤ 0,8, recommended Ra 0,4 – Flatness ratio 0,01/100
MTTFd valves according to EN ISO 13849	150 years, for further details see technical table P007
Ambient temperature range	**A:** **Standard** = -20°C ÷ +70°C **/PE** option = -20°C ÷ +70°C **/BT** option = -40°C ÷ +60°C **AEB, AES:** **Standard** = -20°C ÷ +60°C **/PE** option = -20°C ÷ +60°C **/BT** option = -40°C ÷ +60°C
Storage temperature range	**A:** **Standard** = -20°C ÷ +80°C **/PE** option = -20°C ÷ +80°C **/BT** option = -40°C ÷ +70°C **AEB, AES:** **Standard** = -20°C ÷ +70°C **/PE** option = -20°C ÷ +70°C **/BT** option = -40°C ÷ +70°C
Surface protection	Zinc coating with black passivation, galvanic treatment (driver housing for AEB and AES)
Corrosion resistance	Salt spray test (EN ISO 9227) > 200 h
Vibration resistance	See technical table G004 (for AEB and AES)
Compliance	CE according to EMC directive 2014/30/EU (Immunity: EN 61000-6-2; Emission: EN 61000-6-3) RoHS Directive 2011/65/EU as last update by 2015/863/EU REACH Regulation (EC) n°1907/2006

10 HYDRAULIC CHARACTERISTICS - based on mineral oil ISO VG 46 at 50 °C

Valve model		DHRZO
Max regulated pressure	[bar]	25
Max pressure at port P	[bar]	350
Max pressure at port T	[bar]	210
Min regulated pressure **(1)**	[bar]	3
Max flow	[l/min]	24
Response time 0-100% step signal (depending on installation) **(2)**	[ms]	≤ 45
Hysteresis		≤ 1,5 [% of max pressure]
Linearity		≤ 3,0 [% of max pressure]
Repeatability		≤ 2,0 [% of max pressure]

Note: above performance data refer to valves coupled with Atos electronic drivers, see section 3

(1) Min pressure value to be increased of T line pressure
(2) Average response time value; the pressure variation in consequence of a modification of the reference input signal to the valve is affected by the stiffness of the hydraulic circuit: greater is the stiffness of the circuit, faster is the dynamic response

11 ELECTRICAL CHARACTERISTICS

Power supplies	Nominal : +24 VDC Rectified and filtered : VRMS = 20 ÷ 32 VMAX (ripple max 10 % VPP)				
Max power consumption	**A** = 30 W **AEB**, **AES** = 50 W				
Coil voltage code	standard		option /6		option /18
Max. solenoid current	2,2 A		2,75 A		1 A
Coil resistance R at 20°C	3 ÷ 3,3 Ω		2 ÷ 2,2 Ω		13 ÷ 13,4 Ω
Analog input signals	Voltage: range ±10 VDC (24 VMAX tolerant) Input impedance: Ri > 50 kΩ Current: range ±20 mA Input impedance: Ri = 500 Ω				
Monitor output	Output range: voltage ±5 VDC @ max 5 mA				
Enable input	Range: 0 ÷ 9 VDC (OFF state), 15 ÷ 24 VDC (ON state), 9 ÷ 15 VDC (not accepted); Input impedance: Ri > 87 kΩ				
Fault output	Output range : 0 ÷ 24 VDC (ON state ≅ VL+ [logic power supply] ; OFF state ≅ 0 V) @ max 50 mA; external negative voltage not allowed (e.g. due to inductive loads)				
Alarms	Solenoid not connected/short circuit, cable break with current reference signal, over/under temperature, current control monitoring, power supplies level				
Insulation class	H (180°) Due to the occurring surface temperatures of the solenoid coils, the European standards ISO 13732-1 and EN982 must be taken into account				
Protection degree to DIN EN60529	**A** = IP65; **AEB**, **AES** = IP66 / IP67 with mating connectors				
Duty factor	Continuous rating (ED=100%)				
Tropicalization	Tropical coating on electronics PCB				
Additional characteristics	Short circuit protection of solenoid's current supply; current control by P.I.D. with rapid solenoid switching; protection against reverse polarity of power supply				
Communication interface	USB Atos ASCII coding	IO-Link Interface and System Specification 1.1.3	CANopen EN50325-4 + DS408	PROFIBUS DP EN50170-2/IEC61158	EtherCAT IEC 61158
Communication physical layer	not insulated USB 2.0+USB OTG	SDCI class port B	optical insulated CAN ISO11898	optical insulated RS485	Fast Ethernet, insulated 100 Base TX
Recommended wiring cable	LiYCY shielded cables, see section 21				

Note: a maximum time of 500 ms (depending on communication type) has to be considered between the driver energizing with the 24 VDC power supply and when the valve is ready to operate. During this time the current to the valve coils is switched to zero.

12 SEALS AND HYDRAULIC FLUIDS - for other fluids not included in below table, consult our technical office

Seals, recommended fluid temperature		NBR seals (standard) = -20°C ÷ +60°C (+80°C for **A**), with HFC hydraulic fluids = -20°C ÷ +50°C FKM seals (/PE option) = -20°C ÷ +80°C NBR low temp. seals (/BT option) = -40°C ÷ +60°C, with HFC hydraulic fluids = -20°C ÷ +50°C		
Recommended viscosity		20 ÷ 100 mm²/s - max allowed range 15 ÷ 380 mm²/s		
Max fluid contamination level	normal operation	ISO4406 class 18/16/13 NAS1638 class 7		see also filter section at www.atos.com or KTF catalog
	longer life	ISO4406 class 16/14/11 NAS1638 class 5		
Hydraulic fluid		**Suitable seals type**	**Classification**	**Ref. Standard**
Mineral oils		NBR, FKM, NBR low temp.	HL, HLP, HLPD, HVLP, HVLPD	DIN 51524
Flame resistant without water		FKM	HFDU, HFDR	ISO 12922
Flame resistant with water		NBR, NBR low temp.	HFC	

13 DIAGRAMS (based on mineral oil ISO VG 46 at 50 °C)

1 = Regulation diagrams
with flow rate Q = 1 l/min

Note: the presence of counter pressure at port T can affect the effective pressure regulation

2 = Pressure/flow diagrams
reference signal set at Q = 1 l/min

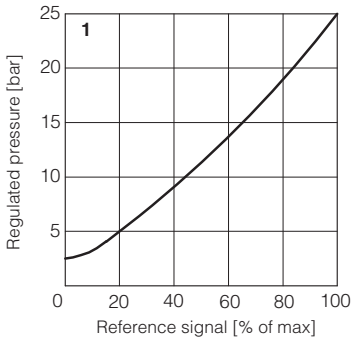

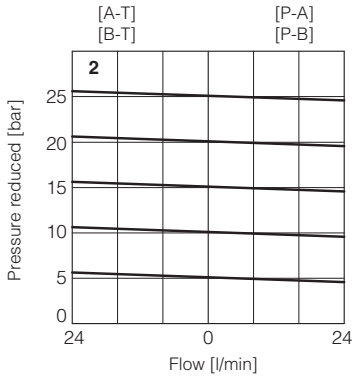

14 HYDRAULIC OPTIONS

For configuration **010**:
B = reduced pressure on port B, solenoid at side of port A

For configuration **012**:
B = solenoid with on-board digital driver at side of port A (only for AEB and AES version)

15 ELECTRONIC OPTIONS - only for **AEB-NP** and **AES**

I = This option provides 4 ÷ 20 mA current reference, instead of the standard ±10 VDC.
Input signal can be reconfigured via software selecting between voltage and current, within a maximum range of ±10 VDC or ±20 mA.
It is normally used in case of long distance between the machine control unit and the valve or where the reference signal can be affected by electrical noise; the valve functioning is disabled in case of reference signal cable breakage.

Q = This option permits to inhibit the valve function without removing the power supply to the driver. Upon disable command the current to the solenoid is zeroed and the valve's spool moves to rest position.
The option /Q is suggested for all cases where the valve has to be frequently inhibited during the machine cycle – see 18.5 for signal specifications.

Z = This option provides, on the 12 pin main connector, the following additional features:
Fault output signal - see 18.6
Enable input signal - see above option /Q
Power supply for driver's logics and communication - see 18.2

16 POSSIBLE COMBINED OPTIONS

Hydraulic options: all combination possible

Electronic options: /IQ, /IZ

Note: **/T** Bluetooth adapter option can be combined with all other options

17 COIL VOLTAGE OPTIONS - only for **A**

6 = Optional coil to be used with Atos drivers with power supply 12 VDC.

18 = Optional coil to be used with electronic drivers not supplied by Atos, with power supply 24 VDC and with max current limited to 1A.

18 POWER SUPPLY AND SIGNALS SPECIFICATIONS - only for **AEB-NP** and **AES**

Generic electrical output signals of the valve (e.g. fault or monitor signals) must not be directly used to activate safety functions, like to switch-ON/OFF the machine's safety components, as prescribed by the European standards (Safety requirements of fluid technology systems and components-hydraulics, ISO 4413).

For **AEB-IL** signals see section 18

18.1 Power supply (V+ and V0)

The power supply must be appropriately stabilized or rectified and filtered: apply at least a 10000 μF/40 V capacitance to single phase rectifiers or a 4700 μF/40 V capacitance to three phase rectifiers. In case of separate power supply see 18.2.

⚠ A safety fuse is required in series to each power supply: 2,5 A time lag fuse.

18.2 Power supply for driver's logic and communication (VL+ and VL0) - only for **/Z** option

The power supply for driver's logic and communication must be appropriately stabilized or rectified and filtered: apply at least a 10000 μF/40 V capacitance to single phase rectifiers or a 4700 μF/40 V capacitance to three phase rectifiers.
The separate power supply for driver's logic on pin 9 and 10, allow to remove solenoid power supply from pin 1 and 2 maintaining active the diagnostics, USB and fieldbus communications.

⚠ A safety fuse is required in series to each driver's logic and communication power supply: 500 mA fast fuse.

18.3 Reference input signal (INPUT+)

The driver controls in closed loop the current to the valve proportionally to the external reference input signal.
Reference input signal is factory preset according to selected valve code, defaults are ±10 VDC for standard and 4 ÷ 20 mA for /I option.
Input signal can be reconfigured via software selecting between voltage and current, within a maximum range of ±10 VDC or ± 20 mA.
Drivers with fieldbus interface (BC, BP, EH) can be software set to receive reference signal directly from the machine control unit (fieldbus reference). Analog reference input signal can be used as on-off commands with input range 0 ÷ 24VDC.

18.4 Monitor output signal (MONITOR)

The driver generates an analog output signal (MONITOR) proportional to the actual coil current of the valve; the monitor output signal can be software set to show other signals available in the driver (e.g. analog reference, fieldbus reference).
Monitor output signal is factory preset according to selected valve code, default settings is ±5 VDC (1V = 1A).
Output signal can be reconfigured via software, within a maximum range of ±5 VDC.

18.5 Enable input signal (ENABLE) - not for standard

To enable the driver, supply a 24 VDC on pin 3 (pin C): Enable input signal allows to enable/disable the current supply to the solenoid, without removing the electrical power supply to the driver; it is used to active the communication and the other driver functions when the valve must be disabled for safety reasons. This condition **does not comply** with norms IEC 61508 and ISO 13849.
Enable input signal can be used as generic digital input by software selection.

18.6 Fault output signal (FAULT) - only for **/Z** option

Fault output signal indicates fault conditions of the driver (solenoid short circuits/not connected, reference signal broken for 4 ÷ 20 mA input, etc.).
Fault presence corresponds to 0 VDC, normal working corresponds to 24 VDC.
Fault status is not affected by the Enable input signal.

19 IO-LINK SIGNALS SPECIFICATIONS - only for **AEB-IL**

19.1 Power supply for IO-Link communication (L+ and L-)

The IO-Link master provides dedicated 24 VDC power supply for IO-Link communication.
Maximum power consumption: 2 W
Internal electrical isolation of power L+, L- from P24, N24

19.2 Power supply for driver's logic and valve regulation (P24 and N24)

The IO-Link master provides dedicated 24 VDC power supply for valve regulation, logics and diagnostics.
Maximum power consumption: 50 W
Internal electrical isolation of power P24, N24 from L+, L-

19.3 IO-Link data line (C/Q)

C/Q signal is used to establish communication between IO-Link master and valve.

20 ELECTRONIC CONNECTIONS

20.1 Main connector signals - 7 pin (A1) Standard and /Q option - for AEB-NP and AES

PIN	Standard	/Q	TECHNICAL SPECIFICATIONS	NOTES
A	**V+**		Power supply 24 VDC	Input - power supply
B	**V0**		Power supply 0 VDC	Gnd - power supply
C	**AGND**		Analog ground	Gnd - analog signal
		ENABLE	Enable (24 VDC) or disable (0 VDC) the driver, referred to V0	Input - on/off signal
D	**INPUT+**		Reference input signal: ±10 VDC / ±20 mA maximum range Defaults are ±10 VDC for standard and 4 ÷ 20 mA for /I option	Input - analog signal **Software selectable**
E	**INPUT-**		Negative reference input signal for INPUT+	Input - analog signal
F	**MONITOR** referred to: AGND | V0		Monitor output signal: ±5 VDC maximum range Default is ±5 VDC (1V = 1A)	Output - analog signal **Software selectable**
G	**EARTH**		Internally connected to driver housing	

20.2 Main connector signals - 12 pin (A2) /Z option - for AEB-NP and AES

PIN	/Z	TECHNICAL SPECIFICATIONS	NOTES
1	**V+**	Power supply 24 VDC	Input - power supply
2	**V0**	Power supply 0 VDC	Gnd - power supply
3	**ENABLE**	Enable (24 VDC) or disable (0 VDC) the driver, referred to VL0	Input - on/off signal
4	**INPUT+**	Reference input signal: ±10 VDC / ±20 mA maximum range Defaults are ±10 VDC for standard and 4 ÷ 20 mA for /I option	Input - analog signal **Software selectable**
5	**INPUT-**	Negative reference input signal for INPUT+	Input - analog signal
6	**MONITOR**	Monitor output signal: ±5 VDC maximum range, referred to VL0 Default is ±5 VDC (1V = 1A)	Output - analog signal **Software selectable**
7	**NC**	Do not connect	
8	**NC**	Do not connect	
9	**VL+**	Power supply 24 VDC for driver's logic and communication	Input - power supply
10	**VL0**	Power supply 0 VDC for driver's logic and communication	Gnd - power supply
11	**FAULT**	Fault (0 VDC) or normal working (24 VDC), referred to VL0	Output - on/off signal
PE	**EARTH**	Internally connected to driver housing	

Note: do not disconnect VL0 before VL+ when the driver is connected to PC USB port

20.3 IO-Link connector signals - M12 - 5 pin - Coding A, port class B (A) only for AEB-IL

PIN	SIGNAL	TECHNICAL SPECIFICATIONS	NOTES
1	**L+**	Power supply 24 VDC for IO-Link communication	Input - power supply
2	**P24**	Power supply 24 VDC for valve regulation, logics and diagnostics	Input - power supply
3	**L-**	Power supply 0 VDC for IO-Link communication	Gnd - power supply
4	**C/Q**	IO-Link data line	Input / Output - signal
5	**N24**	Power supply 0 VDC for valve regulation, logics and diagnostics	Gnd - power supply

Note: L+, L- and P24, N24 are electrically isolated

20.4 Communication connectors - for AEB (B) and AES (B) - (C)

(B) **USB connector - M12 - 5 pin** always present

PIN	SIGNAL	TECHNICAL SPECIFICATION (1)
1	**+5V_USB**	Power supply
2	**ID**	Identification
3	**GND_USB**	Signal zero data line
4	**D-**	Data line -
5	**D+**	Data line +

(C1) **BC fieldbus execution, connector - M12 - 5 pin (2)**

PIN	SIGNAL	TECHNICAL SPECIFICATION (1)
1	**CAN_SHLD**	Shield
2	**NC**	do not connect
3	**CAN_GND**	Signal zero data line
4	**CAN_H**	Bus line (high)
5	**CAN_L**	Bus line (low)

(C2) **BP fieldbus execution, connector - M12 - 5 pin (2)**

PIN	SIGNAL	TECHNICAL SPECIFICATION (1)
1	**+5V**	Termination supply signal
2	**LINE-A**	Bus line (high)
3	**DGND**	Data line and termination signal zero
4	**LINE-B**	Bus line (low)
5	**SHIELD**	

(1) Shield connection on connector's housing is recommended

(C3) (C4) **EH fieldbus execution, connector - M12 - 4 pin (2)**

PIN	SIGNAL	TECHNICAL SPECIFICATION (1)
1	**TX+**	Transmitter
2	**RX+**	Receiver
3	**TX-**	Transmitter
4	**RX-**	Receiver
Housing	**SHIELD**	

(2) Only for **AES** execution

20.5 Solenoid connection - only for A

PIN	SIGNAL	TECHNICAL SPECIFICATION	Connector code 666
1	**COIL**	Power supply	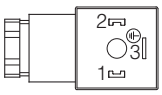
2	**COIL**	Power supply	
3	**GND**	Ground	

20.6 AEB-NP connections layout

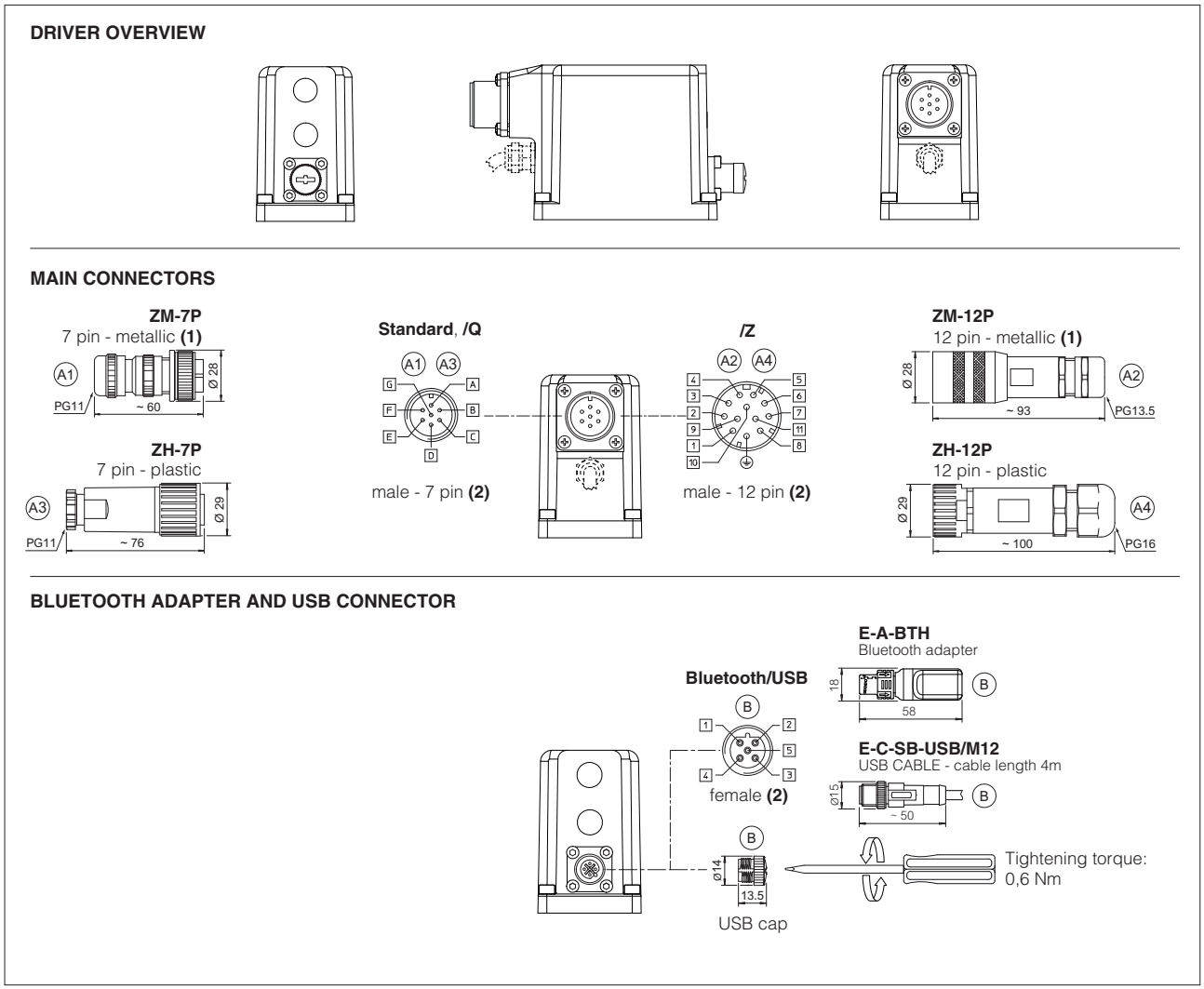

(1) Use of metallic connectors is strongly recommended in order to fulfill EMC requirements **(2)** Pin layout always referred to driver's view

20.7 AEB-IL connections layout

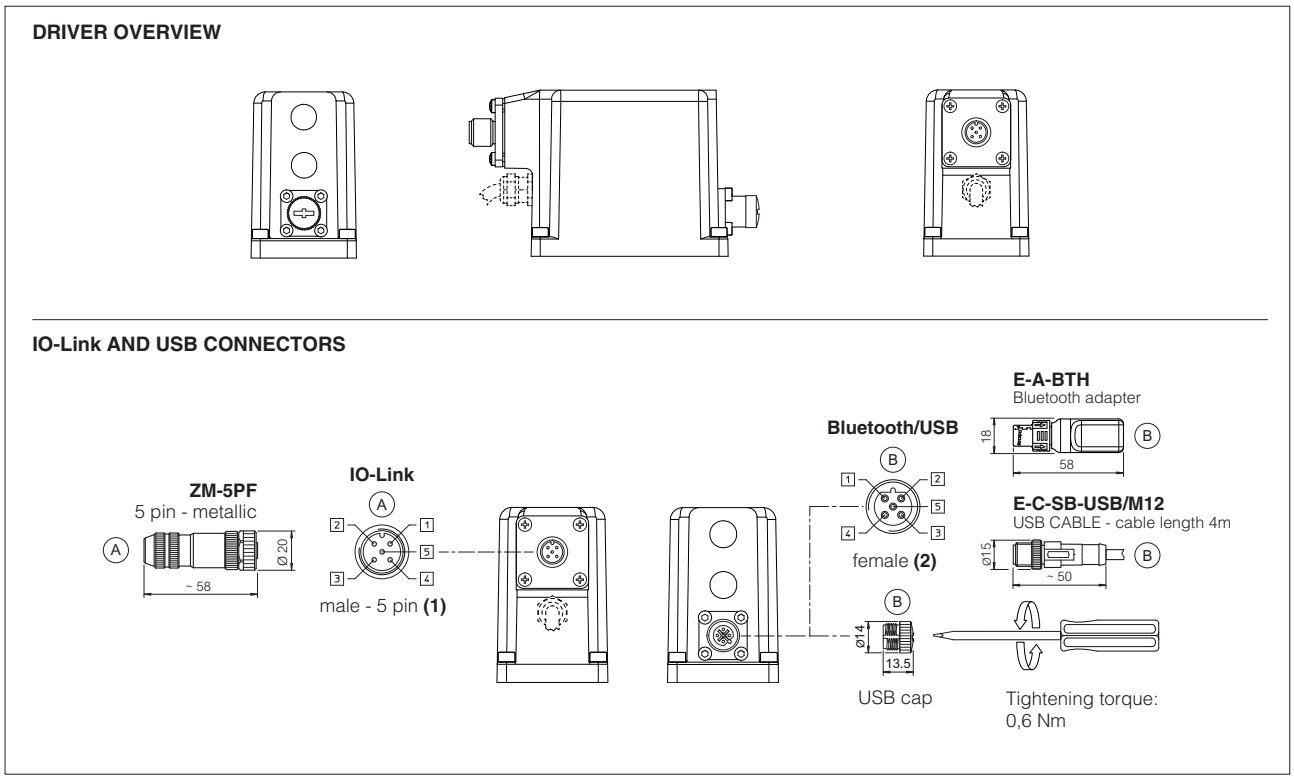

(1) Use of metallic connectors is strongly recommended in order to fulfill EMC requirements **(2)** Pin layout always referred to driver's view

20.8 AES connections layout

DRIVER OVERVIEW

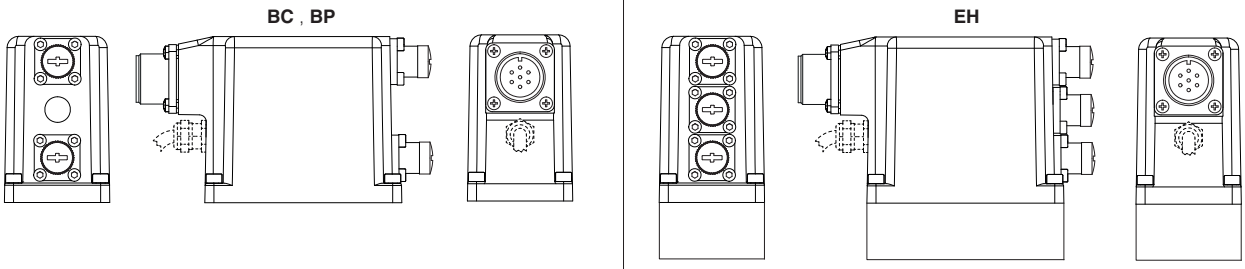

MAIN CONNECTORS

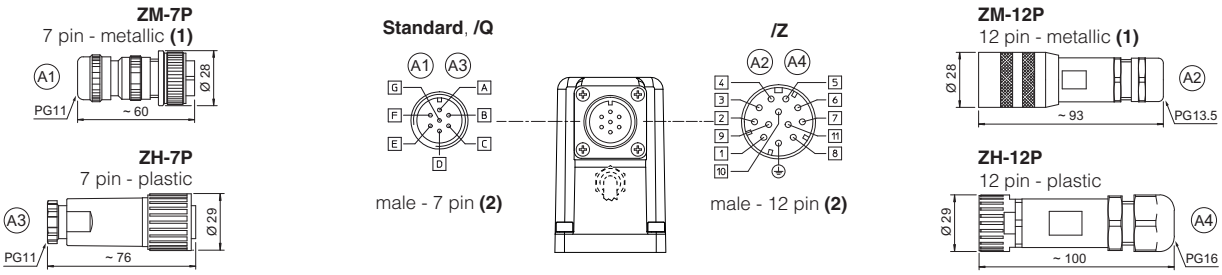

FIELDBUS CONNECTORS

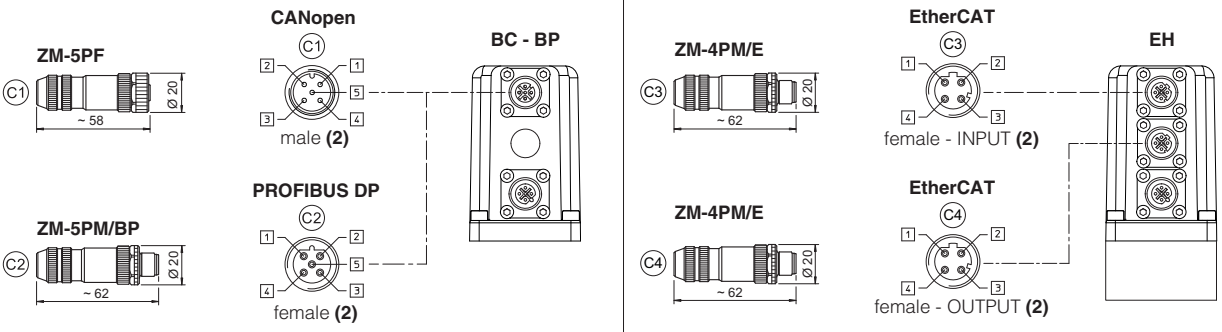

BLUETOOTH ADAPTER AND USB CONNECTOR

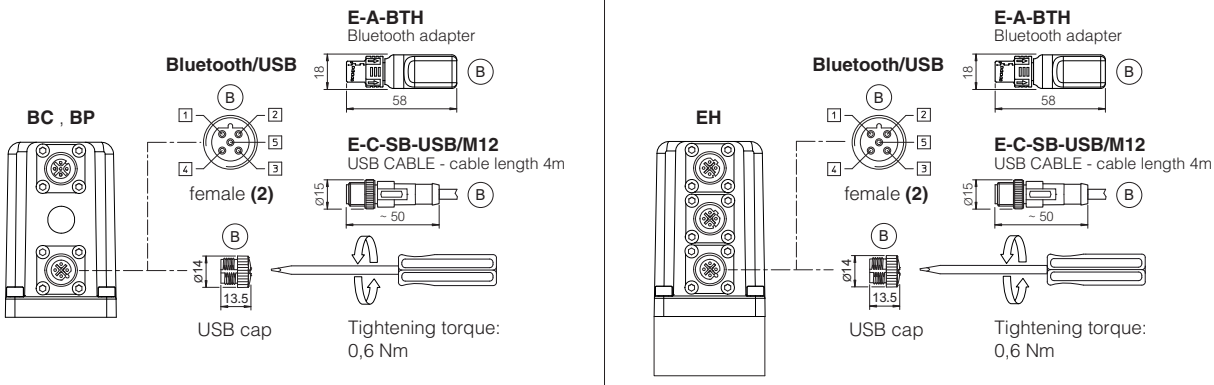

(1) Use of metallic connectors is strongly recommended in order to fulfill EMC requirements **(2)** Pin layout always referred to driver's view

21 CONNECTORS CHARACTERISTICS - to be ordered separately

21.1 Main connectors - 7 pin - for **AEB-NP** and **AES**

CONNECTOR TYPE	POWER SUPPLY AND SIGNALS	POWER SUPPLY AND SIGNALS
CODE	(A1) ZM-7P	(A3) ZH-7P
Type	7pin female straight circular	7pin female straight circular
Standard	According to MIL-C-5015	According to MIL-C-5015
Material	Metallic	Plastic reinforced with fiber glass
Cable gland	PG11	PG11
Recommended cable	LiYCY 7 x 0,75 mm^2 max 20 m (logic and power supply) or LiYCY 7 x 1 mm^2 max 40 m (logic and power supply)	LiYCY 7 x 0,75 mm^2 max 20 m (logic and power supply) or LiYCY 7 x 1 mm^2 max 40 m (logic and power supply)
Conductor size	up to 1 mm^2 - available for 7 wires	up to 1 mm^2 - available for 7 wires
Connection type	to solder	to solder
Protection (EN 60529)	IP 67	IP 67

21.2 Main connectors - 12 pin - for **AEB-NP** and **AES**

CONNECTOR TYPE	POWER SUPPLY AND SIGNALS	POWER SUPPLY AND SIGNALS
CODE	(A2) ZM-12P	(A4) ZH-12P
Type	12pin female straight circular	12pin female straight circular
Standard	DIN 43651	DIN 43651
Material	Metallic	Plastic reinforced with fiber glass
Cable gland	PG13,5	PG16
Recommended cable	LiYCY 12 x 0,75 mm^2 max 20 m (logic and power supply)	LiYCY 10 x 0,14mm^2 max 40 m (logic) LiYY 3 x 1mm^2 max 40 m (power supply)
Conductor size	0,5 mm^2 to 1,5 mm^2 - available for 12 wires	0,14 mm^2 to 0,5 mm^2 - available for 9 wires 0,5 mm^2 to 1,5 mm^2 - available for 3 wires
Connection type	to crimp	to crimp
Protection (EN 60529)	IP 67	IP 67

21.3 IO-Link connector - only for **AEB-IL**

CONNECTOR TYPE	IL IO-Link
CODE	(A) ZM-5PF
Type	5pin female straight circular
Standard	M12 coding A – IEC 61076-2-101
Material	Metallic
Cable gland	Pressure nut - cable diameter 6÷8 mm
Recommended cable	5 x 0,75 mm^2 max 20 m
Connection type	screw terminal
Protection (EN 60529)	IP 67

21.4 Fieldbus communication connectors - only for **AES**

CONNECTOR TYPE	BC CANopen (1)		BP PROFIBUS DP (1)		EH EtherCAT (2)
CODE	(C1) ZM-5PF	(C2) ZM-5PM	(C1) ZM-5PF/BP	(C2) ZM-5PM/BP	(C1) (C2) ZM-4PM/E
Type	5 pin female straight circular	5 pin male straight circular	5 pin female straight circular	5 pin male straight circular	4 pin male straight circular
Standard	M12 coding A – IEC 61076-2-101		M12 coding B – IEC 61076-2-101		M12 coding D – IEC 61076-2-101
Material	Metallic		Metallic		Metallic
Cable gland	Pressure nut - cable diameter 6÷8 mm		Pressure nut - cable diameter 6÷8 mm		Pressure nut - cable diameter 4÷8 mm
Cable	CANbus Standard (DR 303-1)		PROFIBUS DP Standard		Ethernet standard CAT-5
Connection type	screw terminal		screw terminal		terminal block
Protection (EN 60529)	IP67		IP 67		IP 67

(1) E-TRM-** terminators can be ordered separately - see tech table **GS500**

(2) Internally terminated

22 FASTENING BOLTS AND SEALS

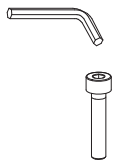	**Fastening bolts:** 4 socket head screws M5x50 class 12.9 Tightening torque = 8 Nm
	Seals: 4 OR 108 Diameter of ports P, A, T: Ø 7,5 mm

23 INSTALLATION DIMENSIONS [mm]

ISO 4401: 2005
Mounting surface: 4401-03-02-0-05 (see table P005)

Mass [kg]		
A	**AEB, AES**	**AES-EH**
1,8	2,3	2,4

DHRZO-A-010

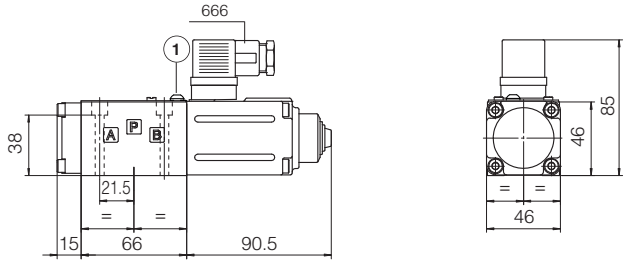

DHRZO-A-012

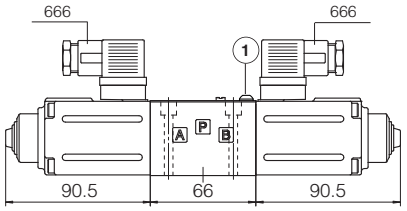

DHRZO-AEB-NP-010
DHRZO-AEB-IL-010

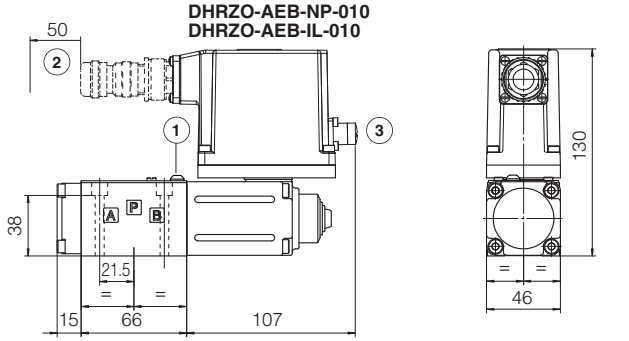

DHRZO-AEB-NP-012
DHRZO-AEB-IL-012

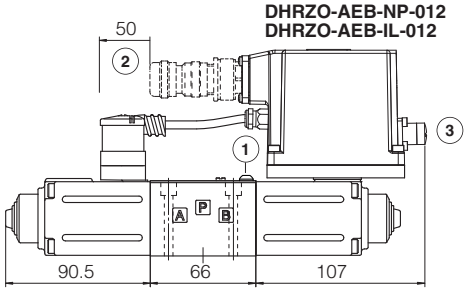

DHRZO-AES-BC-010
DHRZO-AES-BP-010

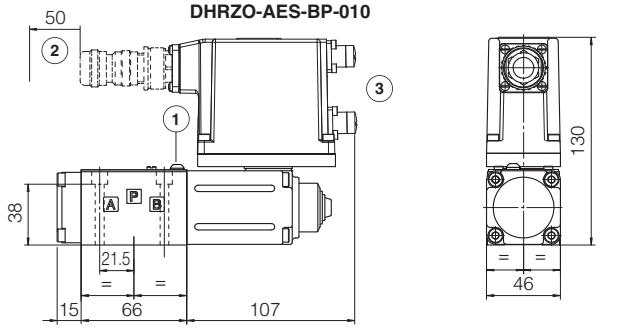

DHRZO-AES-BC-012
DHRZO-AES-BP-012

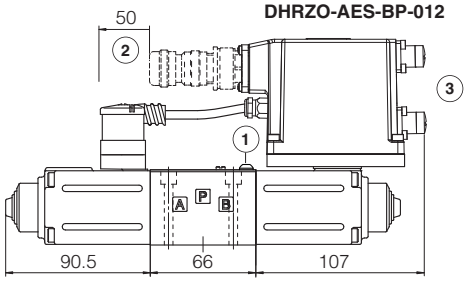

DHRZO-AES-EH-010

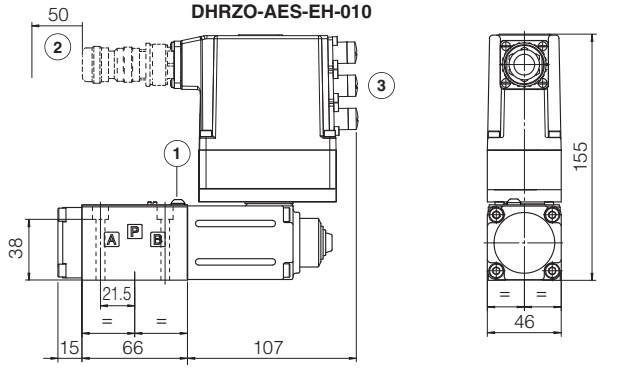

DHRZO-AES-EH-012

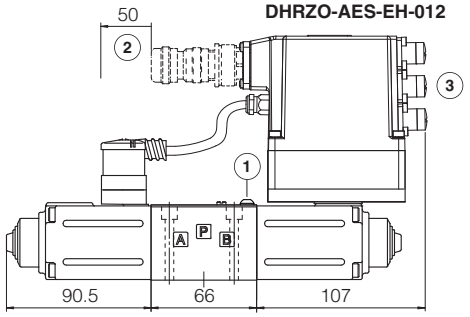

(1) = Air bleeding 3 (2) = Space required for connection cable and for connector removal

(3) = The dimensions of connectors and Bluetooth adapter must be considered, see section 20.6, 20.7 and 20.8

24 RELATED DOCUMENTATION

FS001	Basics for digital electrohydraulics	**K800**	Electric and electronic connectors
FS900	Operating and maintenance information for proportional valves	**P005**	Mounting surfaces for electrohydraulic valves
G010	E-MI-AC analog driver	**QB240**	Quickstart for AEB valves commissioning
G020	E-MI-AS-IR digital driver	**QF240**	Quickstart for AES valves commissioning
G030	E-BM-AS digital driver	**E-MAN-MI-AS**	E-MI-AS-IR user manual (off-board)
GS050	E-BM-AES digital driver	**E-MAN-BM-AS**	E-BM-AS user manual (off-board)
GS500	Programming tools	**E-MAN-BM-AES**	E-BM-AES user manual (off-board)
GS510	Fieldbus	**E-MAN-RI-AEB**	AEB user manual
GS520	IO-Link interface	**E-MAN-RI-AES**	AES user manual

Proportional reducing valves

3-way, direct, without transducer

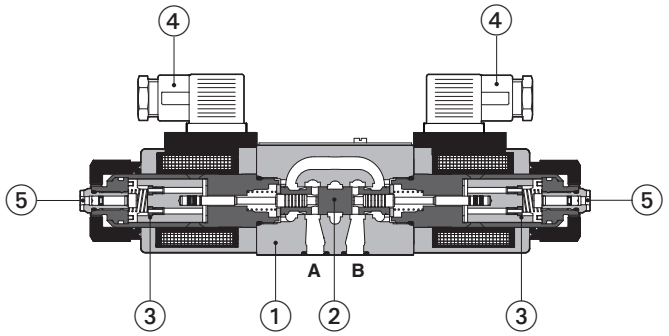

DHRZE- A-012/25

① Valve body
② Spool
③ Proportional solenoid
④ Electric connector (supplied with the valve)
⑤ Bleeding screw

DHRZE-A

3 way, direct, pressure reducing valves for open loop pressure controls.

They operate in association with off-board driver, which supply the proportional valves with proper current to align the valve regulation to the reference signal supplied to the driver.

They provide the pressure reduction on ports A, or B or A and B, depending on the valve model.

The direct execution performs low internal leakages, fast response and low hysteresis.

The solenoids are certified according to North American standard **cURus.**

Typical applications:
- Pressure reduction in low flow systems
- Pilot stage of pilot operated valves

Size: **06** - ISO 4401
Max flow: **24 l/min**
Max pressure: **315 bar**
Max regulated pressure: **25 bar**

1 MODEL CODE

DHRZE	-	A	-	010	/	25	/	*	-	*	/	*	*	/	*

Proportional pressure reducing valve, direct

A = off-board driver, see section 3

Configuration:
010 = reduced pressure on port A (port B for option /B)
012 = reduced pressure on port A and B

Regulated pressure:
25 = reduced pressure range 3÷25 bar

Hydraulic option:
B = reduced pressure on port B, solenoid side of port A (only for valve configuration 010)

Coil with special connectors, see section 12 :
- = omit for standard DIN connector
J = AMP Junior Timer connector
K = Deutsch connector
S = Lead Wire connection

Coil voltage, see section 10 :
- = standard coil for 24VDC Atos drivers
6 = optional coil for 12VDC Atos drivers
18 = optional coil for 24VDC low current drivers **(1)**

Series number

Seals material, see section 8 :
- = NBR
PE = FKM
BT = HNBR

(1) Select valve's coil voltage **/18** in case of electronic drivers not supplied by Atos, with power supply 24 VDC and with max current limited to 1A

2 HYDRAULIC SYMBOL (representation according to ISO 1219-1)

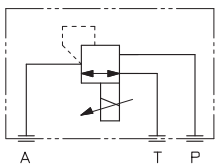

DHRZE-A-010/25

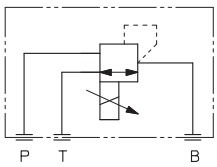

DHRZE-A-010/25/B

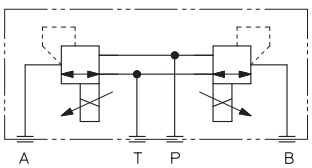

DHRZE-A-012/25

3 OFF-BOARD ELECTRONIC DRIVERS

Please include in the driver order also the complete code of the connected proportional valve.

Drivers model	E-MI-AC-01F		E-MI-AS-IR		E-BM-AS-PS		E-BM-AES
Type	Analog		Digital				
Voltage supply (VDC)	12	24	12	24	12	24	24
Valve coil option	/6	std	/6	std	/6	std	std
Format	plug-in to solenoid				DIN-rail panel		
Tech table	G010		G020		G030		GS050

4 GENERAL NOTES

Atos digital proportionals valves are CE marked according to the applicable directives (e.g. Immunity and Emission EMC Directive).
Installation, wirings and start-up procedures must be performed according to the general prescriptions shown in tech table **FS900** and in the installation notes supply with relevent components.

5 GENERAL CHARACTERISTICS

Assembly position	Any position
Subplate surface finishing to ISO 4401	Acceptable roughness index: Ra ≤ 0,8, recommended Ra 0,4 – Flatness ratio 0,01/100
MTTFd valves according to EN ISO 13849	150 years, see technical table P007
Ambient temperature range	**Standard** = -20°C ÷ +70°C **/PE** option = -20°C ÷ +70°C **/BT** option = -40°C ÷ +60°C
Storage temperature range	**Standard** = -20°C ÷ +80°C **/PE** option = -20°C ÷ +80°C **/BT** option = -40°C ÷ +70°C
Surface protection	Zinc coating with black passivation
Corrosion resistance	Salt spray test (EN ISO 9227) > 200 h
Conformity	CE according to EMC directive 2014/30/EU (Immunity: EN 61000-6-2; Emission: EN 61000-6-3) RoHS Directive 2011/65/EU as last update by 2015/863/EU REACH Regulation (EC) n°1907/2006

6 HYDRAULIC CHARACTERISTICS

Valve model	**DHRZE**
Max regulated pressure (Q=1 l/min) [bar]	25
Min. regulated pressure (Q=1 l/min) **(1)** [bar]	3
Max. pressure at port P [bar]	315
Max. pressure at port T [bar]	210
Max. flow [l/min]	24
Response time 0-100% step signal **(2)** (depending on installation) [ms]	≤ 45
Hysteresis [% of the max pressure]	≤ 1,5
Linearity [% of the max pressure]	≤ 3,0
Repeatability [% of the max pressure]	≤ 2,0

Notes: above performance data refer to valves coupled with Atos electronic drivers, see section 3

(1) Min pressure value to be increased of T line pressure
(2) Average response time value; the pressure variation in consequence of a modification of the reference input signal to the valve is affected by the stiffness of the hydraulic circuit: greater is the stiffness of the circuit, faster is the dynamic response

7 ELECTRICAL CHARACTERISTICS

Power supplies	Nominal : +24 VDC Rectified and filtered : VRMS = 20 ÷ 32 VMAX (ripple max 10 % VPP)		
Coil voltage code	standard	option /6	option /18
Max. solenoid current	2,5 A	3 A	1,2 A
Coil resistance R at 20°C	3,1 Ω	2,1 Ω	13,1 Ω
Insulation class	H (180°) Due to the occuring surface temperatures of the solenoid coils, the European standards ISO 13732-1 and EN982 must be taken into account		
Protection degree to DIN EN60529	IP65 with mating connectors		
Duty factor	Continuous rating (ED=100%)		
Certification	**cURus** North American Standard		

8 SEALS AND HYDRAULIC FLUID - for other fluids not included in below table, consult our technical office

Seals, recommended fluid temperature	NBR seals (standard) = -20°C ÷ +80°C, with HFC hydraulic fluids = -20°C ÷ +50°C FKM seals (/PE option) = -20°C ÷ +80°C HNBR seals (/BT option) = -40°C ÷ +60°C, with HFC hydraulic fluids = -40°C ÷ +50°C		
Recommended viscosity	20÷100 mm²/s - max allowed range 15 ÷ 380 mm²/s		
Fluid contamination class	ISO 4406 class 20/18/15 NAS 1638 class 9, in line filters of 10 μm (β10 ≥75 recommended)		
Hydraulic fluid	**Suitable seals type**	**Classification**	**Ref. Standard**
Mineral oils	NBR, FKM, HNBR	HL, HLP, HLPD, HVLP, HVLPD	DIN 51524
Flame resistant without water	FKM	HFDU, HFDR	ISO 12922
Flame resistant with water	NBR, HNBR	HFC	

9 DIAGRAMS based on mineral oil ISO VG 46 at 50°C

1 = Regulation diagrams
with flow rate Q = 1 l/min

Note: the presence of counter pressure at port T can affect the effective pressure regulation

2 = Pressure/flow diagrams
reference signal set at Q = 1 l/min

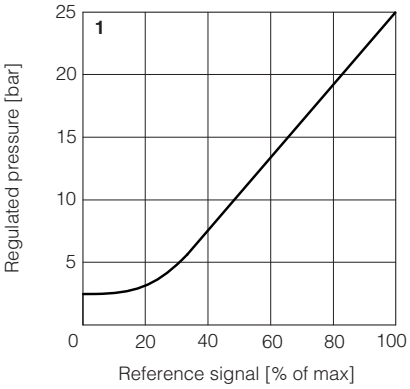

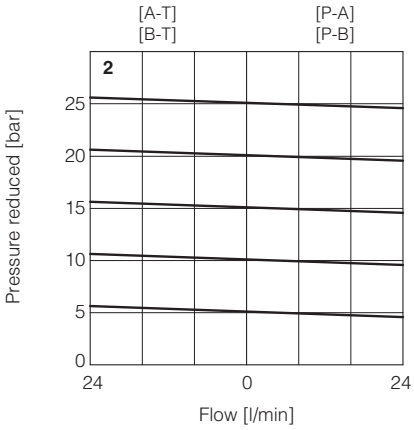

10 COIL VOLTAGE OPTIONS

6 = Optional coil to be used with Atos drivers with power supply 12 VDC.

18 = Optional coil to be used with electronic drivers not supplied by Atos, with power supply 24 VDC and with max current limited to 1A.

11 AIR BLEEDING

At the first valve commissioning the air eventually trapped inside the solenoid must be bled-off though the screw ① located at the rear side of the solenoid housing.
The presence of air may cause pressure instability and vibrations.

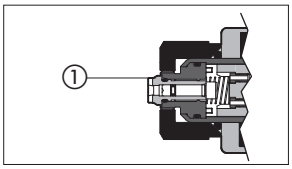

12 COILS WITH SPECIAL CONNECTORS

J option
Coil type COZEJ
AMP Junior Timer connector
Protection degree IP67

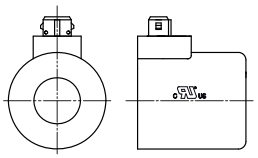

K option
Coil type COZEK
Deutsch connector, DT-04-2P male
Protection degree IP67

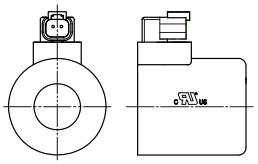

S option
Coil type COZES
Lead Wire connection
Cable lenght = 180 mm

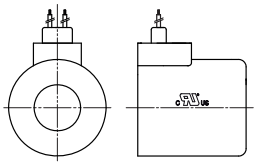

13 SOLENOID CONNECTION

PIN	SIGNAL	TECHNICAL SPECIFICATION	Connector code 666
1	**COIL**	Power supply	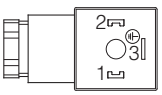
2	**COIL**	Power supply	
3	**GND**	Ground	

14 FASTENING BOLTS AND SEALS FOR DHRZE

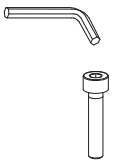	**Fastening bolts:** 4 socket head screws M5x30 class 12.9 Tightening torque = 8 Nm
	Seals: 4 OR 108 Diameter of ports P, T, A: Ø 7,5 mm

15 INSTALLATION DIMENSIONS FOR DHRZE [mm]

ISO 4401: 2005
Mounting surface: 4401-03-02-0-05 (see table P005)

Mass [kg]	
DHRZE-A-010	1,9
DHRZE-A-012	2,6

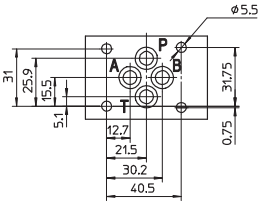

DHRZE-A-010

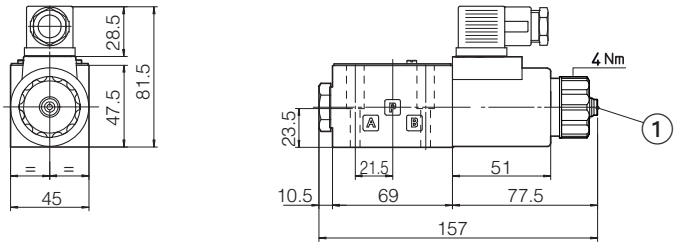

DHRZE-A-010/B

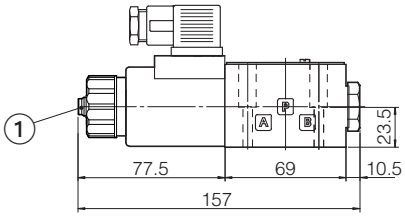

DHRZE-A-012

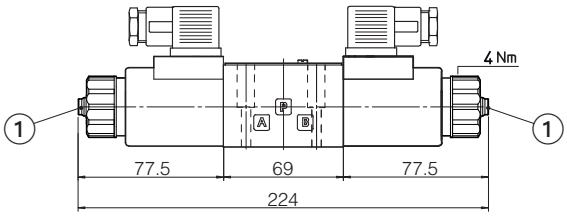

(1) = Air bleeding, see section 11

16 RELATED DOCUMENTATION

FS001	Basics for digital electrohydraulics	**GS050**	E-BM-AES digital driver
FS900	Operating and maintenance information for proportional valves	**GS500**	Programming tools
G010	E-MI-AC analog driver	**K800**	Electric and electronic connectors
G020	E-MI-AS-IR digital driver	**P005**	Mounting surfaces for electrohydraulic valves
G030	E-BM-AS digital driver		

Digital proportional flow valves

direct, pressure compensated, with on-board driver and LVDT transducer

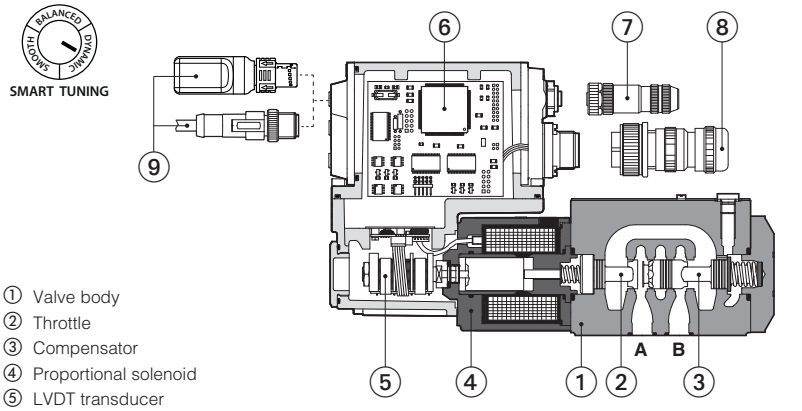

① Valve body
② Throttle
③ Compensator
④ Proportional solenoid
⑤ LVDT transducer
⑥ On-board digital driver
⑦ Communication connector
⑧ Main connector
⑨ Bluetooth/USB connection

QVKZOR-TES-SN-BP

QVHZO-TEB, QVHZO-TES QVKZOR-TEB, QVKZOR-TES

Proportional flow control valves, direct, pressure compensated, equipped with LVDT position transducer for best accuracy in flow regulations.

TEB basic execution with analog reference signal or IO-Link interface for digital reference signals, valve settings, and real-time diagnostics.

TES full execution which includes also optional fieldbus interfaces for digital reference signals, valve settings, and real-time diagnostics.

Bluetooth/USB connection is always present for valve settings via mobile App and Atos PC software.

QVHZO:	**QVKZOR**:
Size: **06** - ISO 4401	Size: **10** - ISO 4401
Max flow: **45 l/min**	Max flow: **90 l/min**
Max pressure: **210 bar**	Max pressure: **210 bar**

1 MODEL CODE

QVKZOR - TES - SN - NP - 10 / 65 / * / * | * | *

QVKZOR

Proportional flow control valves, direct, pressure compensated

QVHZO = size 06
QVKZOR = size 10

TEB = basic on-board digital driver
TES = full on-board digital driver

Alternated P/Q controls:
SN = none

IO-Link interface, only for TEB, see section 7 :
NP = Not present **IL** = IO-Link

Fieldbus interfaces, only for TES, see section 8 :
NP = Not present
BC = CANopen **EW** = POWERLINK
BP = PROFIBUS DP **EI** = EtherNet/IP
EH = EtherCAT **EP** = PROFINET RT/IRT

Valve size ISO 4401:
06 = size 06 **10** = size 06

Max regulated flow:

QVHZO:		**QVKZOR**:
3 = 3,5 l/min	**36** = 35 l/min	**65** = 65 l/min
12 = 12 l/min	**45** = 45 l/min	**90** = 90 l/min
18 = 18 l/min		

Electronic options (1), not available for TEB-SN-IL:
I = current reference input and monitor 4÷20 mA
F = fault signal
Q = enable signal
Z = double power supply (only for TES), enable, fault and monitor signals -12 pin connector

Bluetooth option (2), see section 5 :
T = Bluetooth adapter supplied with the valve

Series number

Seals material, see section 12 :
- = NBR
PE = FKM
BT = NBR low temperature

(1) Possible combined options: /FI, /IQ, /IZ (/T Bluetooth adapter option can be combined with all other options)

2 HYDRAULIC SYMBOLS

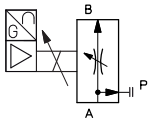

2 way connection

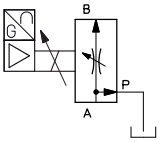

3 way connection

The valves can be used in 2 or 3 way connection, depending to the application requirements.

In **2 way** the P port must not be connected (blocked)
In **3 way** the P port has to be connected to tank or to other user lines
The port T must be always not connected (blocked)

For application examples of 2 and 3 way connections, see section 14

3 GENERAL NOTES

Atos digital proportionals valves are CE marked according to the applicable directives (e.g. Immunity and Emission EMC Directive).
Installation, wirings and start-up procedures must be performed according to the general prescriptions shown in tech table **FS900** and in the user manuals included in the E-SW-SETUP programming software.

4 VALVE SETTINGS AND PROGRAMMING TOOLS - see tech. table GS500

4.1 Atos CONNECT mobile App

Free downloadable App for smartphones and tablets which allows quick access to valve main functional parameters and basic diagnostic information via Bluetooth, thus avoiding physical cable connection and significantly reducing commissioning time.
Atos CONNECT supports Atos digital valve drivers equipped with E-A-BTH adapter or with built-in Bluetooth. It does not support valves with p/Q control or axis controls.

Download on the App Store

GET IT ON Google Play

4.2 E-SW-SETUP PC software

Free downloadable software for PC allows to set all valve functional parameters and to access complete diagnostic information of digital valve drivers via Bluetooth/USB service port.
Atos E-SW-SETUP PC software supports all Atos digital valve drivers and it is available at www.atos.com in MyAtos area.

WARNING: drivers USB port is not isolated! For E-C-SB-USB/M12 cable, the use of E-A-SB-USB/OPT isolator adapter is highly recommended for PC protection

Bluetooth or USB connection

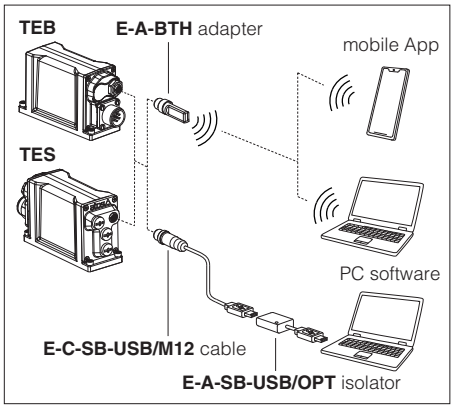

5 BLUETOOTH OPTION - see tech. table GS500

T option adds Bluetooth® connectivity to Atos valve drivers thanks to E-A-BTH adapter, which can be left permanently installed on-board, to allow the Bluetooth connection with the valve drivers at any time. E-A-BTH adapter can also be purchased separately and used to connect with any supported Atos digital product.
Bluetooth connection to the valve can be protected against unauthorised access by setting a personal password. The adapter leds visually indicates the status of valve driver and Bluetooth connection.

WARNING: for the list of countries where the Bluetooth adapter has been approved, see tech. table **GS500**
T option is not available for the Indian market, so the Bluetooth adapter must be ordered separately.

6 SMART TUNING

Smart tuning allows to adjust the valve dynamic response in order to match different performance requirements.

The valve is provided with 3 factory settings for the spool control:
- **dynamic** fast response time and high sensitivity for best dynamic performances. Default factory setting for directional valves
- **balanced** average response time and sensitivity suitable for major applications
- **smooth** attenuated response time and sensitivity to improve control stability in critical applications or in environments with electrical disturbances

Smart tuning setting can be switched from Dynamic (default) to Balanced or Smooth via software or fieldbus; if requested, performances can be further customized directly tuning each single control parameter. For details consult related manuals E-MAN-RI-* and Quickstart, see section 24.

7 IO-LINK - only for TEB, see tech. table GS520

IO-Link allows low cost digital communication between the valve and machine central unit. The valve is directly connected to a port of an IO-Link master (point-to-point connection) via low-cost unshielded cables for digital reference, diagnostic and settings. The IO-Link master works as a hub exchanging this information with the machine central unit via fieldbus.

8 FIELDBUS - only for TES, see tech. table GS510

Fieldbus allows valve direct communication with machine control unit for digital reference, valve diagnostics and settings. These execution allow to operate the valves through fieldbus or analog signals available on the main connector.

9 GENERAL CHARACTERISTICS

Assembly position	Any position
Subplate surface finishing to ISO 4401	Acceptable roughness index: Ra ≤0,8, recommended Ra 0,4 – Flatness ratio 0,01/100
MTTFd valves according to EN ISO 13849	150 years, for further details see technical table P007
Ambient temperature range	**Standard** = -20°C ÷ +60°C **/PE** option = -20°C ÷ +60°C **/BT** option = -40°C ÷ +60°C
Storage temperature range	**Standard** = -20°C ÷ +70°C **/PE** option = -20°C ÷ +70°C **/BT** option = -40°C ÷ +70°C
Surface protection	Zinc coating with black passivation, galvanic treatment (driver housing)
Corrosion resistance	Salt spray test (EN ISO 9227) > 200 h
Vibration resistance	See technical table G004
Compliance	CE according to EMC directive 2014/30/EU (Immunity: EN 61000-6-2; Emission: EN 61000-6-3) RoHS Directive 2011/65/EU as last update by 2015/863/EU REACH Regulation (EC) n°1907/2006

10 HYDRAULIC CHARACTERISTICS - based on mineral oil ISO VG 46 at 50 °C

Valve model	QVHZO					QVKZOR	
Max regulated flow [l/min]	3,5	12	18	35	45	65	90
Min regulated flow [cm³/min]	15	20	30	50	60	85	100
Regulating Δp [bar]	4 - 6		10 - 12		15	6 - 8	10 - 12
Max flow on port A [l/min]	50				60	70	100
Max pressure [bar]	210					210	
Response time 0÷100% step signal [ms]	25					35	
Hysteresis [% of the regulated max flow]	0,5					0,5	
Linearity [% of the regulated max flow]	0,5					0,5	
Repeatability [% of the regulated max flow]	0,1					0,1	
Thermal drift	zero point displacement < 1% at ΔT = 40°C						

11 ELECTRICAL CHARACTERISTICS

Power supplies	Nominal : +24 VDC Rectified and filtered : VRMS = 20 ÷ 32 VMAX (ripple max 10 % VPP)				
Max power consumption	50 W				
Max. solenoid current	**QVHZO** = 2,6 A **QVKZOR** = 3 A				
Coil resistance R at 20°C	**QVHZO** = 3 ÷ 3,3 W **QVKZOR** = 3,8 ÷ 4,1 W				
Analog input signals	Voltage: range ±10 VDC (24 VMAX tolerant) Input impedance: Ri > 50 kΩ Current: range ±20 mA Input impedance: Ri = 500 Ω				
Monitor outputs	Output range: voltage ±10 VDC @ max 5 mA current ±20 mA @ max 500 Ω load resistance				
Enable input	Range: 0 ÷ 5 VDC (OFF state), 9 ÷ 24 VDC (ON state), 5 ÷ 9 VDC (not accepted); Input impedance: Ri > 10 kΩ				
Fault output	Output range: 0 ÷ 24 VDC (ON state > [power supply - 2 V] ; OFF state < 1 V) @ max 50 mA; external negative voltage not allowed (e.g. due to inductive loads)				
Pressure/Force transducer power supply (only for SP, SF, SL)	+24VDC @ max 100 mA (E-ATR-8 see tech table **GS465**)				
Alarms	Solenoid not connected/short circuit, cable break with current reference signal, over/under temperature, valve spool transducer malfunctions, alarms history storage function				
Insulation class	H (180°) Due to the occurring surface temperatures of the solenoid coils, the European standards ISO 13732-1 and EN982 must be taken into account				
Protection degree to DIN EN60529	IP66 / IP67 with mating connectors				
Duty factor	Continuous rating (ED=100%)				
Tropicalization	Tropical coating on electronics PCB				
Additional characteristics	Short circuit protection of solenoid's current supply; 3 leds for diagnostic (only for TES); spool position control by P.I.D. with rapid solenoid switching; protection against reverse polarity of power supply				
Communication interface	USB Atos ASCII coding	IO-Link Interface and System Specification 1.1.3	CANopen EN50325-4 + DS408	PROFIBUS DP EN50170-2/IEC61158	EtherCAT POWERLINK EtherNet/IP PROFINET IO RT/IRT IEC 61158
Communication physical layer	not insulated USB 2.0+USB OTG	SDCI class port B	optical insulated CAN ISO11898	optical insulated RS485	Fast Ethernet, insulated 100 Base TX
Recommended wiring cable	LiYCY shielded cables, see section 21				

Note: a maximum time of 800 ms (depending on communication type) has to be considered between the driver energizing with the 24 VDC power supply and when the valve is ready to operate. During this time the current to the valve coils is switched to zero.

12 SEALS AND HYDRAULIC FLUIDS - for other fluids not included in below table, consult our technical office

Seals, recommended fluid temperature	NBR seals (standard) = -20°C ÷ +60°C, with HFC hydraulic fluids = -20°C ÷ +50°C FKM seals (/PE option) = -20°C ÷ +80°C NBR low temp. seals (/BT option) = -40°C ÷ +60°C, with HFC hydraulic fluids = -20°C ÷ +50°C			
Recommended viscosity	20÷100 mm²/s - max allowed range 15 ÷ 380 mm²/s			
Max fluid contamination level — normal operation	ISO4406 class 18/16/13 NAS1638 class 7		see also filter section at www.atos.com or KTF catalog	
Max fluid contamination level — longer life	ISO4406 class 16/14/11 NAS1638 class 5			
Hydraulic fluid	**Suitable seals type**	**Classification**	**Ref. Standard**	
Mineral oils	NBR, FKM, NBR low temp.	HL, HLP, HLPD, HVLP, HVLPD	DIN 51524	
Flame resistant without water	FKM	HFDU, HFDR	ISO 12922	
Flame resistant with water	NBR, NBR low temp.	HFC		

13 DIAGRAMS - based on mineral oil ISO VG 46 at 50 °C

13.1 Regulation diagrams

1 = QVHZO-*-06/**3**
2 = QVHZO-*-06/**12**
3 = QVHZO-*-06/**18**
4 = QVHZO-*-06/**36**
5 = QVHZO-*-06/**45**
6 = QVKZOR-*-10/**65**
7 = QVKZOR-*-10/**90**

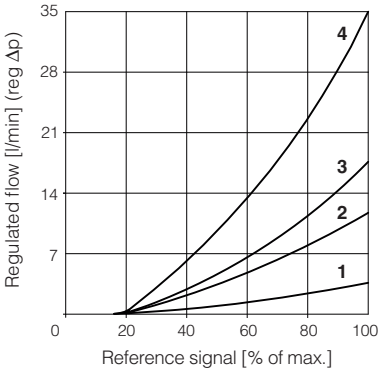

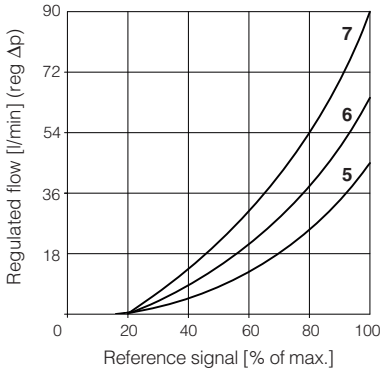

13.2 Regulated flow/outlet pressure diagrams

with inlet pressure = 210 bar

1 = QVHZO
2 = QVKZOR

Dotted line for 3-way versions

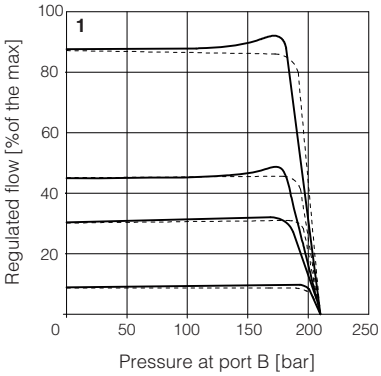

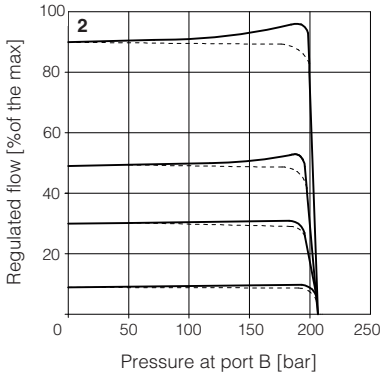

13.3 Flow A →P/Δp diagrams

3-way configuration

1 = QVHZO-*-06/**3**
QVHZO-*-06/**12**
2 = QVHZO-*-06/**18**
QVHZO-*-06/**36**
3 = QVHZO-*-06/**45**
4 = QVKZOR-*-10/**65**
5 = QVKZOR-*-10/**90**

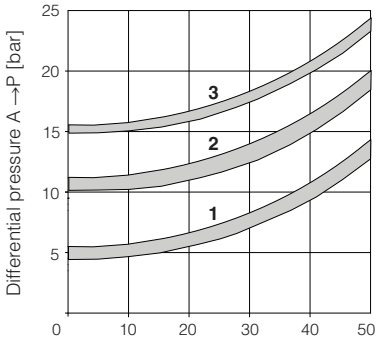

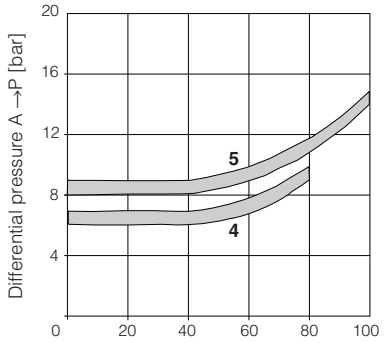

14 APPLICATIONS AND CONNECTIONS

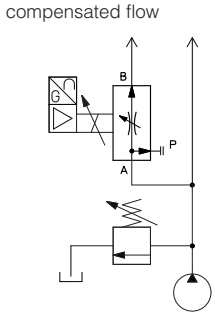

2 way connection

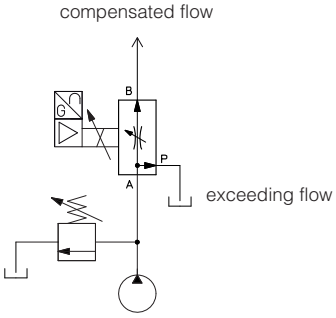

3 way connection

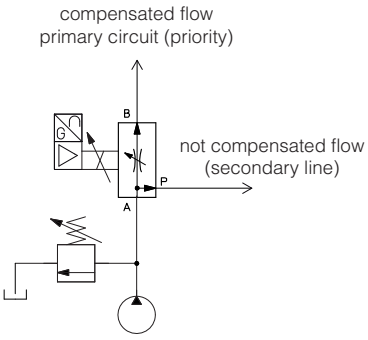

priority connection

2 way connection
The 2 way connection is normally used to control the flow in one part of the hydraulic circuit or to regulate the speed of a specific actuator.
The metered flow in the controlled line is kept constant, independently to the load variations
If the valve is directly installed on the pump main line, the exceeding flow is returned to tank though the pressure relief valve.

3 way connection
The 3 way connection is normally used when the valve directly controls the pump flow (main line)
The metered flow in the controlled line is kept constant, independently to the load variations
The exceeding flow (not metered by the valve) it is returned to tank trough the valve P port = T line (3rd way)

Priority connection
The priority connection guarantees the pressure compensated flow supply to the primary circuit.
The exceeding flow (not required by the primary circuit) is bypassed through the valve P port, to secondary circuit operating at lower pressure and not requiring compensated flow regulations.

15 ELECTRONIC OPTIONS - not available for **TEB-SN-IL**

F = This option permits to monitor the eventual fault condition of the driver, as for example the solenoid short circuit/not connected, reference signal cable broken for option /I, spool position transducer broken, etc. - see 17.9 for signal specifications.

I = This option provides 4 ÷ 20 mA current reference and monitor signals, instead of the standard 0 ÷ 10 VDC.
Input signal can be reconfigured via software selecting between voltage and current, within a maximum range of ±10 VDC or ±20 mA.
It is normally used in case of long distance between the machine control unit and the valve or where the reference signal can be affected by electrical noise; the valve functioning is disabled in case of reference signal cable breakage.

Q = This option permits to inhibit the valve function without removing the power supply to the driver. Upon disable command the current to the solenoid is zeroed and the valve's spool moves to rest position.
The option /Q is suggested for all cases where the valve has to be frequently inhibited during the machine cycle – see 17.7 for signal specifications.

Z = This option provides, on the 12 pin main connector, the following additional features:
Fault output signal - see above option **/F**
Enable input signal - see above option **/Q**
Repeat enable output signal - only for **TEB-SN-NP** (see 17.6)
Power supply for driver's logics and communication - only for **TES** (see 17.2)

16 POSSIBLE COMBINED OPTIONS - not available for **TEB-SN-IL**

/FI, /IQ, /IZ

Note: **/T** Bluetooth adapter option can be combined with all other options

17 POWER SUPPLY AND SIGNALS SPECIFICATIONS

Generic electrical output signals of the valve (e.g. fault or monitor signals) must not be directly used to activate safety functions, like to switch-ON/OFF the machine's safety components, as prescribed by the European standards (Safety requirements of fluid technology systems and components-hydraulics, ISO 4413).

For **TEB-SN-IL** signals see section 18

17.1 Power supply (V+ and V0)

The power supply must be appropriately stabilized or rectified and filtered: apply at least a 10000 µF/40 V capacitance to single phase rectifiers or a 4700 µF/40 V capacitance to three phase rectifiers. In case of separate power supply see 17.2.

⚠ A safety fuse is required in series to each power supply: 2,5 A time lag fuse.

17.2 Power supply for driver's logic and communication (VL+ and VL0) - only for **TES** with **/Z** option

The power supply for driver's logic and communication must be appropriately stabilized or rectified and filtered: apply at least a 10000 µF/40 V capacitance to single phase rectifiers or a 4700 µF/40 V capacitance to three phase rectifiers.
The separate power supply for driver's logic on pin 9 and 10, allow to remove solenoid power supply from pin 1 and 2 maintaining active the diagnostics, USB and fieldbus communications.

⚠ A safety fuse is required in series to each driver's logic and communication power supply: 500 mA fast fuse.

17.3 Flow reference input signal (Q_INPUT+)

The driver controls in closed loop the valve spool position proportionally to the external reference input signal.
Reference input signal is factory preset according to selected valve code, defaults are 0 ÷ 10 VDC for standard and 4 ÷ 20 mA for /I option.
Input signal can be reconfigured via software selecting between voltage and current, within a maximum range of ±10 VDC or ± 20 mA.
Drivers with fieldbus interface can be software set to receive reference signal directly from the machine control unit (fieldbus reference).
Analog reference input signal can be used as on-off commands with input range 0 ÷ 24VDC.

17.4 Flow monitor output signal (Q_MONITOR) - not for **/F**

The driver generates an analog output signal proportional to the actual spool position of the valve; the monitor output signal can be software set to show other signals available in the driver (e.g. analog reference, fieldbus reference, pilot spool position).
Monitor output signal is factory preset according to selected valve code, defaults are 0 ÷ 10 VDC for standard and 4 ÷ 20 mA for /I option.
Output signal can be reconfigured via software selecting between voltage and current, within a maximum range of ±10 VDC or ± 20 mA.

17.5 Enable input signal (ENABLE) - not for standard and **/F**

To enable the driver, supply a 24 VDC on pin 3 (pin C): Enable input signal allows to enable/disable the current supply to the solenoid, without removing the electrical power supply to the driver; it is used to active the communication and the other driver functions when the valve must be disabled for safety reasons. This condition **does not comply** with norms IEC 61508 and ISO 13849.
Enable input signal can be used as generic digital input by software selection.

17.6 Repeat enable output signal (R_ENABLE) - only for **TEB-SN-NP** with **/Z** option

Repeat enable is used as output repeater signal of enable input signal (see 17.5).

17.7 Fault output signal (FAULT) - not for standard and **/Q**

Fault output signal indicates fault conditions of the driver (solenoid short circuits/not connected, reference signal cable broken for 4 ÷ 20 mA input, spool position transducer cable broken, etc.). Fault presence corresponds to 0 VDC, normal working corresponds to 24 VDC.
Fault status is not affected by the Enable input signal. Fault output signal can be used as digital output by software selection.

18 IO-LINK SIGNALS SPECIFICATIONS - only for **TEB-SN-IL**

18.1 Power supply for IO-Link communication (L+ and L-)

The IO-Link master provides dedicated 24 VDC power supply for IO-Link communication.
Maximum power consumption: 2 W
Internal electrical isolation of power L+, L- from P24, N24

18.2 Power supply for driver's logic and valve regulation (P24 and N24)

The IO-Link master provides dedicated 24 VDC power supply for valve regulation, logics and diagnostics.
Maximum power consumption: 50 W
Internal electrical isolation of power P24, N24 from L+, L-

18.3 IO-Link data line (C/Q)

C/Q signal is used to establish communication between IO-Link master and valve.

19 ELECTRONIC CONNECTIONS AND LEDS

19.1 Main connector signals - 7 pin - standard, /F and /Q options (A1)

PIN	Standard	/Q	/F	TECHNICAL SPECIFICATIONS	NOTES
A	**V+**			Power supply 24 VDC	Input - power supply
B	**V0**			Power supply 0 VDC	Gnd - power supply
C	**AGND**		**AGND**	Analog ground	Gnd - analog signal
		ENABLE		Enable (24 VDC) or disable (0 VDC) the valve, referred to V0	Input - on/off signal
D	**Q_INPUT+**			Flow reference input signal: ±10 VDC / ±20 mA maximum range Defaults are 0 ÷ 10 VDC for standard and 4 ÷ 20 mA for /I option	Input - analog signal **Software selectable**
E	**INPUT-**			Negative reference input signal for Q_INPUT+	Input - analog signal
F	**Q_MONITOR** referred to: AGND V0			Flow monitor output signal: ±10 VDC / ±20 mA maximum range Defaults are 0 ÷ 10 VDC for standard and 4 ÷ 20 mA for /I option	Output - analog signal **Software selectable**
			FAULT	Fault (0 VDC) or normal working (24 VDC)	Output - on/off signal
G	**EARTH**			Internally connected to the driver housing	

19.2 Main connector signal - 12 pin - /Z option (A2)

PIN	TEB-SN /Z	TES-SN /Z	TECHNICAL SPECIFICATIONS	NOTES
	V+		Power supply 24 VDC	Input - power supply
1	**V0**		Power supply 0 VDC	Gnd - power supply
2 3	**ENABLE** referred to: V0	VL0	Enable (24 VDC) or disable (0 VDC) the valve	Input - on/off signal
4	**Q_INPUT+**		Flow reference input signal: ±10 VDC / ±20 mA maximum range Defaults are 0 ÷ 10 VDC for standard and 4 ÷ 20 mA for /I option	Input - analog signal **Software selectable**
5	**INPUT-**		Negative reference input signal for Q_INPUT+	Input - analog signal
6	**Q_MONITOR** referred to: AGND	VL0	Flow monitor output signal: ±10 VDC / ±20 mA maximum range Defaults are 0 ÷ 10 VDC for standard and 4 ÷ 20 mA for /I option	Input - analog signal **Software selectable**
7	**AGND**		Analog ground	Output - analog signal
		NC	Do not connect	Gnd - analog signal
8	**R_ENABLE**		Repeat enable, output repeater signal of enable input, referred to V0	Output - on/off signal
		NC	Do not connect	
9	**NC**		Do not connect	
		VL+	Power supply 24 VDC for driver's logic and communication	Input - power supply
10	**NC**		Do not connect	
		VL0	Power supply 0 VDC for driver's logic and communication	Gnd - power supply
11 PE	**FAULT** referred to: V0	VL0	Fault (0 VDC) or normal working (24 VDC)	Output - on/off signal
	EARTH		Internally connected to the driver housing	

Note: do not disconnect VL0 before VL+ when the driver is connected to PC USB port

19.3 IO-Link connector signals - M12 - 5 pin - Coding A, port class B (A) only for TEB-SN-IL

PIN	SIGNAL	TECHNICAL SPECIFICATIONS	NOTES
1	**L+**	Power supply 24 VDC for IO-Link communication	Input - power supply
2	**P24**	Power supply 24 VDC for valve regulation, logics and diagnostics	Input - power supply
3	**L-**	Power supply 0 VDC for IO-Link communication	Gnd - power supply
4	**C/Q**	IO-Link data line	Input / Output - signal
5	**N24**	Power supply 0 VDC for valve regulation, logics and diagnostics	Gnd - power supply

Note: L+, L- and P24, N24 are electrically isolated

19.4 Communications connectors (B) - (C)

(B) **USB connector - M12 - 5 pin** always present

PIN	SIGNAL	TECHNICAL SPECIFICATION (1)
1	**+5V_USB**	Power supply
2	**ID**	Identification
3	**GND_USB**	Signal zero data line
4	**D-**	Data line -
5	**D+**	Data line +

(C1) (C2) **BC fieldbus execution, connector - M12 - 5 pin**

PIN	SIGNAL	TECHNICAL SPECIFICATION (1)
1	**CAN_SHLD**	Shield
2	**not used**	(C1) - (C2) pass-through connection (2)
3	**CAN_GND**	Signal zero data line
4	**CAN_H**	Bus line (high)
5	**CAN_L**	Bus line (low)

(C1) (C2) **BP fieldbus execution, connector - M12 - 5 pin**

PIN	SIGNAL	TECHNICAL SPECIFICATION (1)
1	**+5V**	Termination supply signal
2	**LINE-A**	Bus line (high)
3	**DGND**	Data line and termination signal zero
4	**LINE-B**	Bus line (low)
5	**SHIELD**	

(C1) (C2) **EH, EW, EI, EP fieldbus execution, connector - M12 - 4 pin**

PIN	SIGNAL	TECHNICAL SPECIFICATION (1)
1	**TX+**	Transmitter
2	**RX+**	Receiver
3	**TX-**	Transmitter
4	**RX-**	Receiver
	SHIELD	

(1) shield connection on connector's housing is recommended

(2) Pin 2 can be fed with external +5V supply of CAN interface

19.5 TEB-SN-NP connections layout

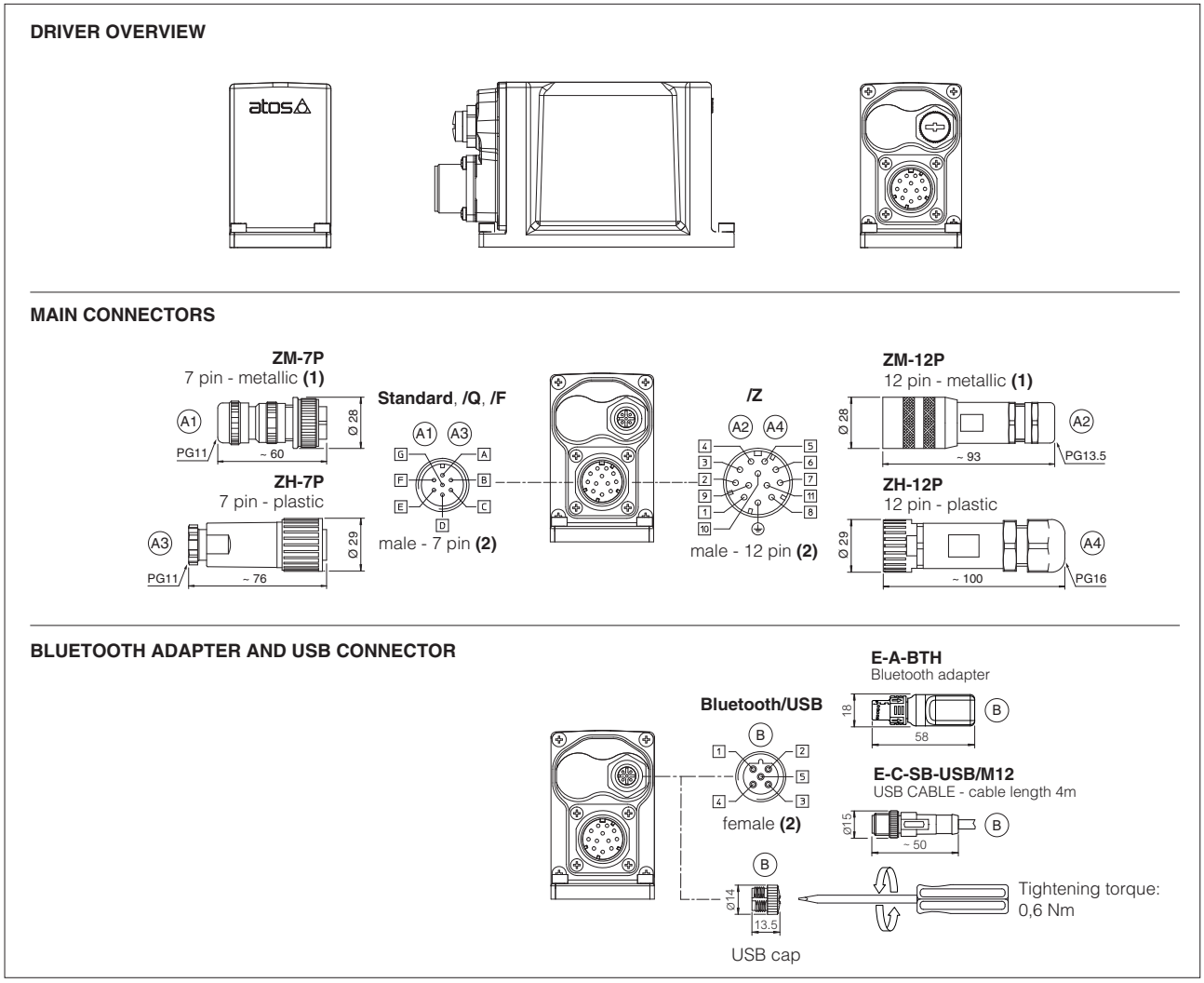

(1) Use of metallic connectors is strongly recommended in order to fulfill EMC requirements **(2)** Pin layout always referred to driver's view

19.6 TEB-SN-IL connections layout

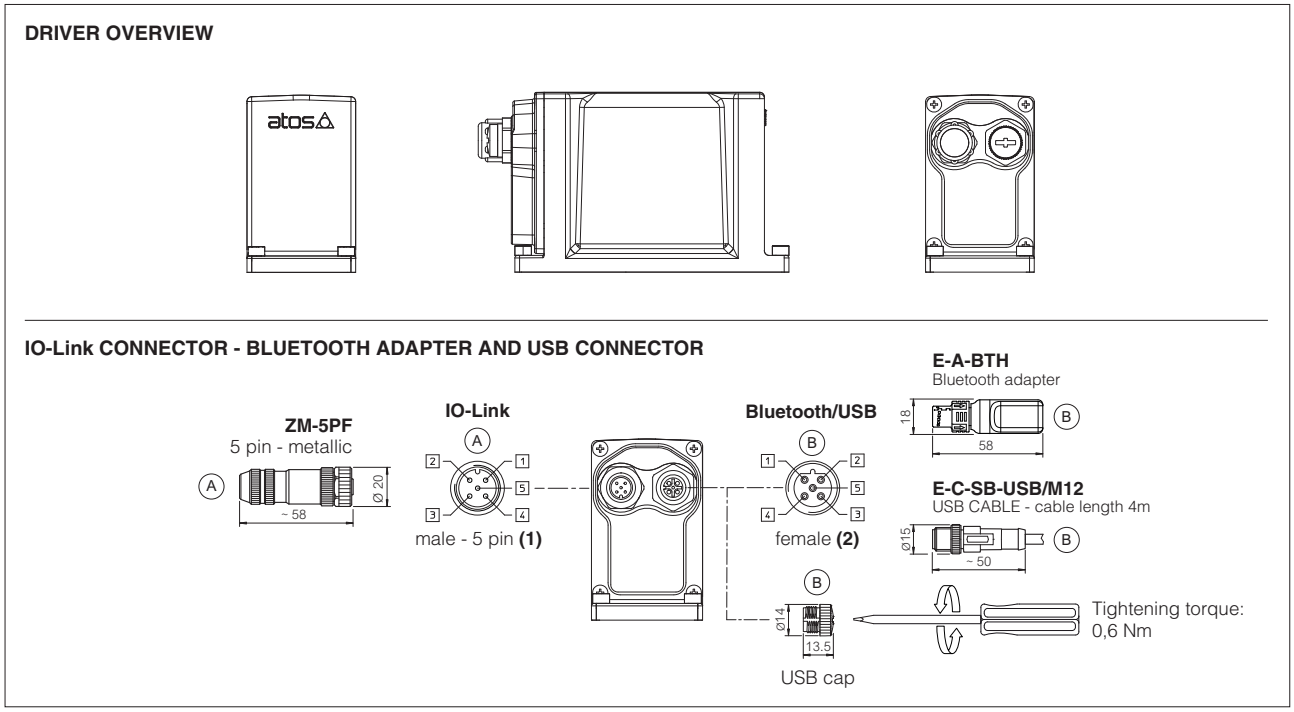

(1) Pin layout always referred to driver's view

19.7 TES connections layout

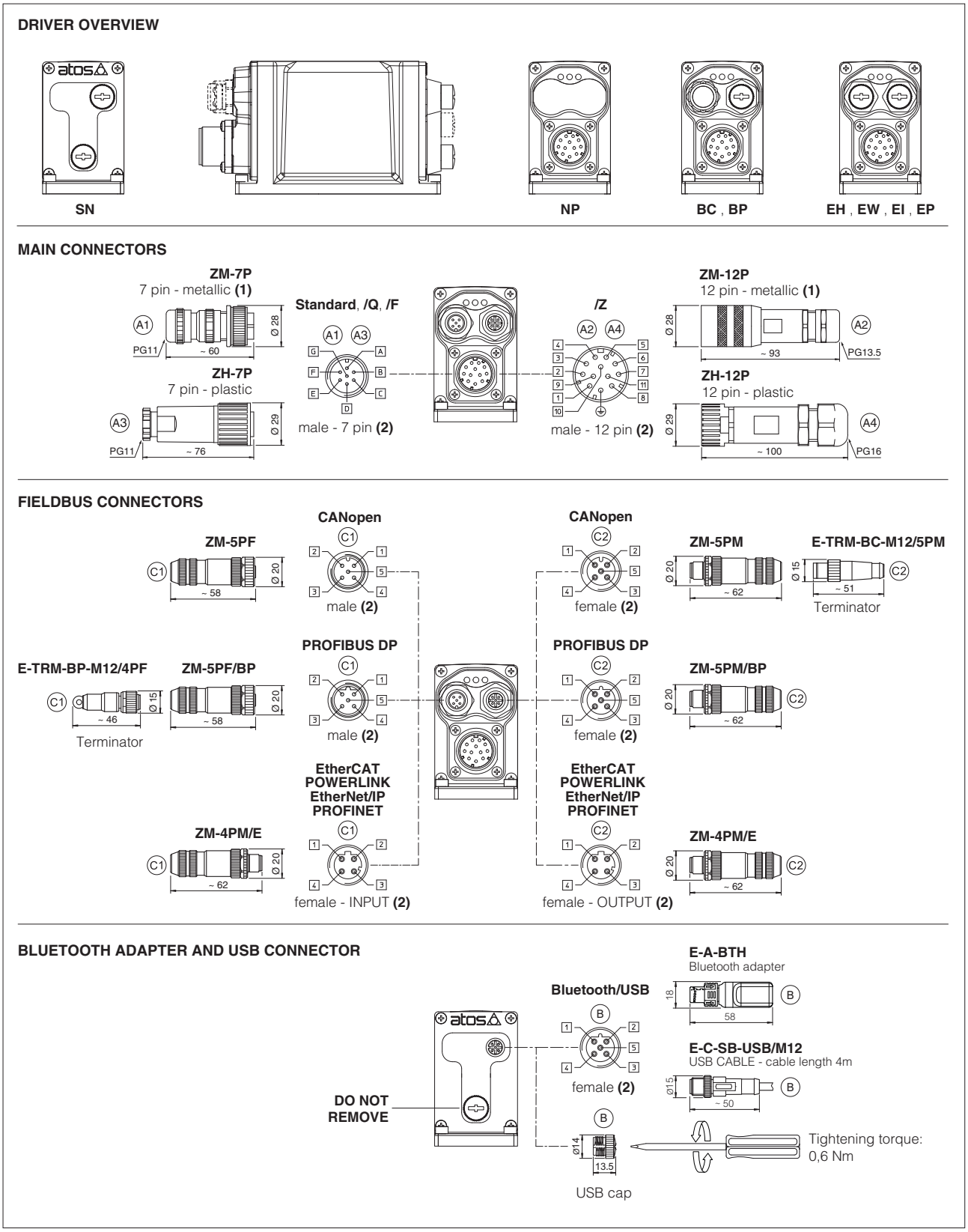

(1) Use of metallic connectors is strongly recommended in order to fulfill EMC requirements **(2)** Pin layout always referred to driver's view

19.8 Diagnostic LEDs - only for **TES**

Three leds show driver operative conditions for immediate basic diagnostics. Please refer to the driver user manual for detailed information.

FIELDBUS / LEDS	NP Not Present	BC CANopen	BP PROFIBUS DP	EH EtherCAT	EW POWERLINK	EI EtherNet/IP	EP PROFINET
L1	VALVE STATUS			LINK/ACT			
L2	NETWORK STATUS			NETWORK STATUS			
L3	SOLENOID STATUS			LINK/ACT			

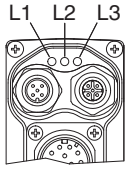

20 IN / OUT FIELDBUS COMMUNICATION CONNECTORS

Two fieldbus communication connectors are always available for digital drivers executions BC, BP, EH, EW, EI, EP. This features allows considerable technical advantages in terms of installation simplicity, wirings reduction and also avoid the usage expensive T-connectors.
For BC and BP executions the fieldbus connectors have an internal pass-through connection and can be used like end point of the fieldbus network, using an external terminator (see tech table **GS500**).
For EH, EW, EI and EP executions the external terminators are not required: each connector is internally terminated.

BC and BP pass-through connection

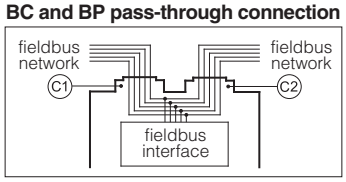

21 CONNECTORS CHARACTERISTICS - to be ordered separately

21.1 Main connectors - 7 pin

CONNECTOR TYPE	POWER SUPPLY AND SIGNALS	POWER SUPPLY AND SIGNALS
CODE	A1 ZM-7P	A3 ZH-7P
Type	7pin female straight circular	7pin female straight circular
Standard	According to MIL-C-5015	According to MIL-C-5015
Material	Metallic	Plastic reinforced with fiber glass
Cable gland	PG11	PG11
Recommended cable	LiYCY 7 x 0,75 mm² max 20 m (logic and power supply) or LiYCY 7 x 1 mm² max 40 m (logic and power supply)	LiYCY 7 x 0,75 mm² max 20 m (logic and power supply) or LiYCY 7 x 1 mm² max 40 m (logic and power supply)
Conductor size	up to 1 mm² - available for 7 wires	up to 1 mm² - available for 7 wires
Connection type	to solder	to solder
Protection (EN 60529)	IP 67	IP 67

21.2 Main connectors - 12 pin

CONNECTOR TYPE	POWER SUPPLY AND SIGNALS	POWER SUPPLY AND SIGNALS
CODE	A2 ZM-12P	A4 ZH-12P
Type	12pin female straight circular	12pin female straight circular
Standard	DIN 43651	DIN 43651
Material	Metallic	Plastic reinforced with fiber glass
Cable gland	PG13,5	PG16
Recommended cable	LiYCY 12 x 0,75 mm² max 20 m (logic and power supply)	LiYCY 10 x 0,14mm² max 40 m (logic) LiYY 3 x 1mm² max 40 m (power supply)
Conductor size	0,5 mm² to 1,5 mm² - available for 12 wires	0,14 mm² to 0,5 mm² - available for 9 wires 0,5 mm² to 1,5 mm² - available for 3 wires
Connection type	to crimp	to crimp
Protection (EN 60529)	IP 67	IP 67

21.3 IO-Link connector - only for **TEB-SN-IL**

CONNECTOR TYPE	IL IO-Link
CODE	A ZM-5PF
Type	5pin female straight circular
Standard	M12 coding A – IEC 61076-2-101
Material	Metallic
Cable gland	Pressure nut - cable diameter 6÷8 mm
Recommended cable	5 x 0,75 mm² max 20 m
Connection type	screw terminal
Protection (EN 60529)	IP 67

21.4 Fieldbus communication connectors

CONNECTOR TYPE	BC CANopen (1)		BP PROFIBUS DP (1)		EH EtherCAT, EW POWERLINK, EI EtherNet/IP, EP PROFINET (2)
CODE	C1 ZM-5PF	C2 ZM-5PM	C1 ZM-5PF/BP	C2 ZM-5PM/BP	C1 C2 ZM-4PM/E
Type	5 pin female straight circular	5 pin male straight circular	5 pin female straight circular	5 pin male straight circular	4 pin male straight circular
Standard	M12 coding A – IEC 61076-2-101		M12 coding B – IEC 61076-2-101		M12 coding D – IEC 61076-2-101
Material	Metallic		Metallic		Metallic
Cable gland	Pressure nut - cable diameter 6÷8 mm		Pressure nut - cable diameter 6÷8 mm		Pressure nut - cable diameter 4÷8 mm
Cable	CANbus Standard (DR 303-1)		PROFIBUS DP Standard		Ethernet standard CAT-5
Connection type	screw terminal		screw terminal		terminal block
Protection (EN 60529)	IP67		IP 67		IP 67

(1) E-TRM-** terminators can be ordered separately - see tech table **GS500**

(2) Internally terminated

22 FASTENING BOLTS AND SEALS

	QVHZO	QVKZOR
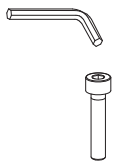	**Fastening bolts:** 4 socket head screws M5x50 class 12.9 Tightening torque = 8 Nm	**Fastening bolts:** 4 socket head screws M6x40 class 12.9 Tightening torque = 15 Nm
	Seals: 4 OR 108 Diameter of ports A, B, P, T: Ø 7,5 mm (max)	**Seals:** 5 OR 2050 Diameter of ports A, B, P, T: Ø 11,2 mm (max)

23 INSTALLATION DIMENSIONS [mm]

QVHZO-TEB, QVHZO-TES

ISO 4401: 2005
Mounting surface: 4401-03-02-0-05 (see tab. P005)

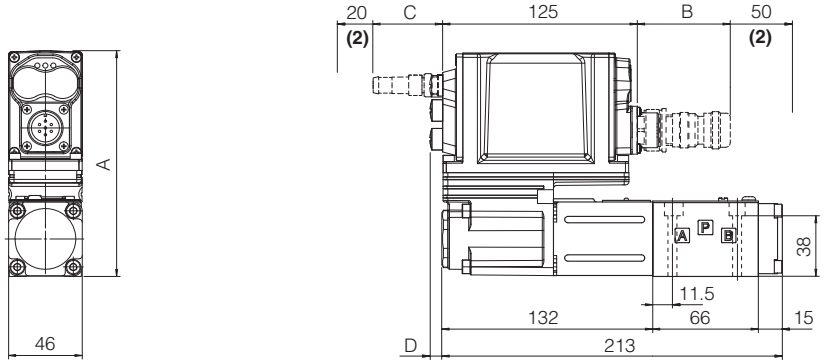

QVHZO	A	B (1)	C (1)	D	Mass [kg]
TEB - SN - IL	140	60	-	-	2,7
TEB - SN - NP	140	100	-	-	
TES - SN - NP, BC, BP, EH	140	100	58	8	
TES - SN - EW, EI, EP	155	100	58	8	

(1) The indicated dimension refers to the longer connectors or Bluetooth adapter
For dimensions of connectors and Bluetooth adapter, see sections 19.5, 19.6 and 19.7
(2) Space required for connection cable and for connector removal

QVKZOR-TEB, QVKZOR-TES

ISO 4401: 2005
Mounting surface: 4401-05-04-0-05 (see tab. P005)

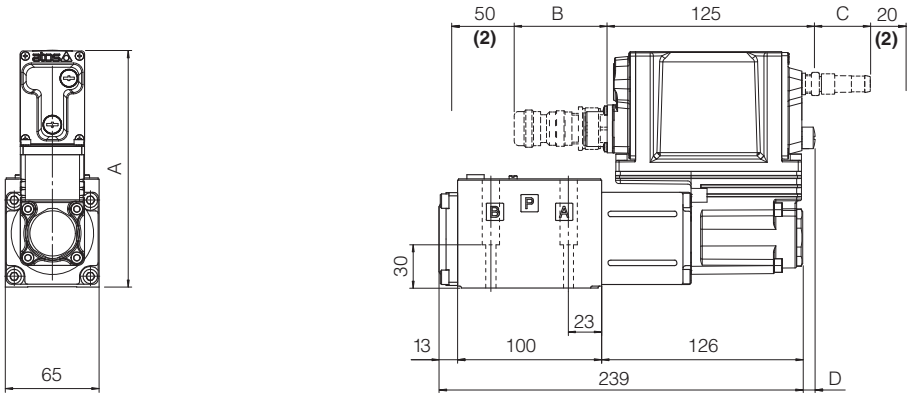

QVKZOR	A	B (1)	C (1)	D	Mass [kg]
TEB - SN - IL	150	60	-	-	4,7
TEB - SN - NP	150	100	-	-	
TES - SN - NP, BC, BP, EH	150	100	58	8	
TES - SN - EW, EI, EP	165	100	58	8	

(1) The indicated dimension refers to the longer connectors or Bluetooth adapter
For dimensions of connectors and Bluetooth adapter, see sections 19.5, 19.6 and 19.7
(2) Space required for connection cable and for connector removal

24 RELATED DOCUMENTATION

FS001 Basics for digital electrohydraulics
FS900 Operating and maintenance information for proportional valves
GS500 Programming tools
GS510 Fieldbus
GS520 IO-Link interface
K800 Electric and electronic connectors
P005 Mounting surfaces for electrohydraulic valves
QB300 Quickstart for TEB valves commissioning
QF300 Quickstart for TES valves commissioning
E-MAN-RI-LEB TEB/LEB user manual
E-MAN-RI-LES TES/LES user manual

Proportional flow valves

direct, pressure compensated, with LVDT transducer

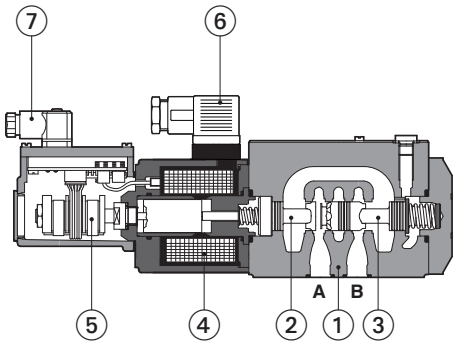

① Valve body
② Throttle
③ Compensator
④ Proportional solenoid
⑤ LVDT transducer
⑥ Solenoid connector
⑦ Transducer connector

QVKZOR-T-10/*

QVHZO-T, QVKZOR-T

Proportional flow control valves, direct, pressure compensated, equipped with LVDT position transducer for best accuracy in flow regulations.

The valves operate in association with digital off-board divers, see section 2.

The mechanical pressure compensator keeps a constant Δp across the proportional throttle, thus the regulated flow is independent to the load conditions.

The valves can be connected in 2-way or in 3-way, in this last the exceeding flow, not regulated from A to B ports, returns to tank trough the P port (3rd way).

QVHZO:	**QVKZOR**:
Size: **06** - ISO 4401	Size: **10** - ISO 4401
Max flow: **45 l/min**	Max flow: **90 l/min**
Max pressure: **210 bar**	Max pressure: **210 bar**

1 MODEL CODE

QVKZOR	-	T	-	10	/	65	/	*	/	*

Proportional flow control valves, direct, pressure compensated

QVHZO = size 06
QVKZOR = size 10

T = with LVDT transducer

Valve size ISO 4401:

06 = size 06
10 = size 10

Max regulated flow:

QVHZO:		**QVKZOR**:
3 = 3,5 l/min	**36** = 35 l/min	**65** = 65 l/min
12 = 12 l/min	**45** = 45 l/min	**90** = 90 l/min
18 = 18 l/min		

Series number

Seals material,
see section 7 :

- **-** = NBR
- **PE** = FKM
- **BT** = HNBR

2 HYDRAULIC SYMBOLS

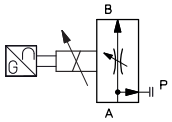

2 way connection

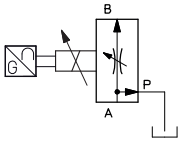

3 way connection

The valves can be used in 2 or 3 way connection, depending to the application requirements.

In **2 way** the P port must not be connected (blocked)
In **3 way** the P port has to be connected to tank or to other user lines
The port T must be always not connected (blocked)

For application examples of 2 and 3 way connections, see section 9

3 OFF-BOARD ELECTRONIC DRIVERS

Please include in the driver order also the complete code of the connected proportional valve.

Drivers model	E-BM-TEB	E-BM-TES
Type	digital	digital
Format	DIN-rail panel	DIN-rail panel
Tech table	GS230	GS240

4 GENERAL CHARACTERISTICS

Assembly position	Any position
Subplate surface finishing to ISO 4401	Acceptable roughness index: Ra ≤ 0,8, recommended Ra 0,4 – Flatness ratio 0,01/100
MTTFd valves according to EN ISO 13849	150 years, see technical table P007
Ambient temperature range	**Standard** = -20°C ÷ +60°C **/PE** option = -20°C ÷ +60°C **/BT** option = -40°C ÷ +60°C
Storage temperature range	**Standard** = -20°C ÷ +70°C **/PE** option = -20°C ÷ +70°C **/BT** option = -40°C ÷ +70°C
Surface protection	Zinc coating with black passivation
Corrosion resistance	Salt spray test (EN ISO 9227) > 200 h
Compliance	CE according to EMC directive 2014/30/EU (Immunity: EN 61000-6-2; Emission: EN 61000-6-3) RoHS Directive 2011/65/EU as last update by 2015/863/EU REACH Regulation (EC) n°1907/2006

5 HYDRAULIC CHARACTERISTICS - based on mineral oil ISO VG 46 at 50 °C

Valve model		**QVHZO**					**QVKZOR**	
Max regulated flow	[l/min]	3,5	12	18	35	45	65	90
Min regulated flow	[cm³/min]	15	20	30	50	60	85	100
Regulating Δp	[bar]	4 - 6		10 - 12		15	6 - 8	10 - 12
Max flow on port A	[l/min]	50				60	70	100
Max pressure	[bar]	210					210	
Response time 0÷100% step signal	[ms]	25					35	
Hysteresis	[% of the regulated max flow]	0,5					0,5	
Linearity	[% of the regulated max flow]	0,5					0,5	
Repeatability	[% of the regulated max flow]	0,1					0,1	
Thermal drift		zero point displacement < 1% at ΔT = 40°C						

6 ELECTRICAL CHARACTERISTICS

Max power consumption	30 W
Max. solenoid current	**QVHZO** = 2,6 A **QVKZOR** = 3 A
Coil resistance R at 20°C	**QVHZO** = 3 ÷ 3,3 Ω **QVKZOR** = 3,8 ÷ 4,1 Ω
Insulation class	H (180°) Due to the occuring surface temperatures of the solenoid coils, the European standards ISO 13732-1 and EN982 must be taken into account
Protection degree to DIN EN60529	IP65 with mating connectors
Duty factor	Continuous rating (ED=100%)

7 SEALS AND HYDRAULIC FLUIDS - for other fluids not included in below table, consult our technical office

Seals, recommended fluid temperature		NBR seals (standard) = -20°C ÷ +80°C, with HFC hydraulic fluids = -20°C ÷ +50°C FKM seals (/PE option) = -20°C ÷ +80°C HNBR seals (/BT option) = -40°C ÷ +60°C, with HFC hydraulic fluids = -40°C ÷ +50°C		
Recommended viscosity		20÷100 mm²/s - max allowed range 15 ÷ 380 mm²/s		
Max fluid contamination level	normal operation	ISO4406 class 18/16/13 NAS1638 class 7		see also filter section at www.atos.com or KTF catalog
	longer life	ISO4406 class 16/14/11 NAS1638 class 5		
Hydraulic fluid		**Suitable seals type**	**Classification**	**Ref. Standard**
Mineral oils		NBR, FKM, HNBR	HL, HLP, HLPD, HVLP, HVLPD	DIN 51524
Flame resistant without water		FKM	HFDU, HFDR	ISO 12922
Flame resistant with water		NBR, HNBR	HFC	

8 DIAGRAMS - based on mineral oil ISO VG 46 at 50 °C

8.1 Regulation diagrams

1 = QVHZO-T-06**/3**
2 = QVHZO-T-06**/12**
3 = QVHZO-T-06**/18**
4 = QVHZO-T-06**/36**
5 = QVHZO-T-06**/45**
6 = QVKZOR-T-10**/65**
7 = QVKZOR-T-10**/90**

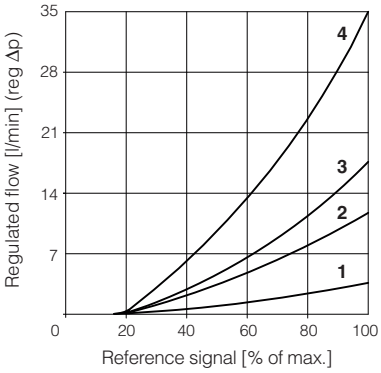

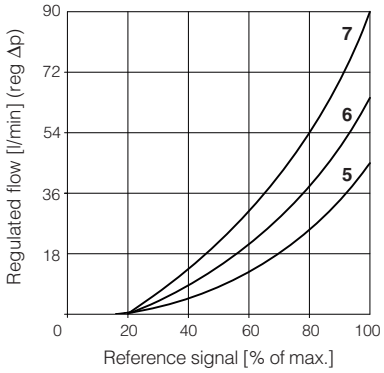

8.2 Regulated flow/outlet pressure diagrams
with inlet pressure = 210 bar

1 = QVHZO
2 = QVKZOR

Dotted line for 3-way versions

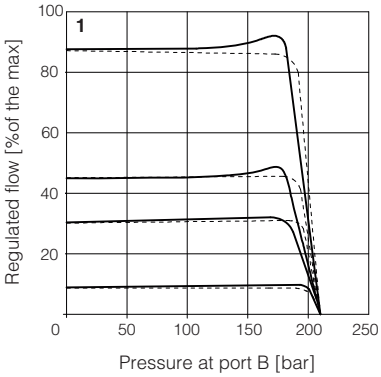

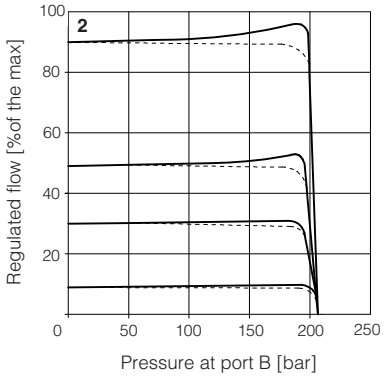

8.3 Flow A →P/Δp diagrams
3-way configuration

1 = QVHZO-T-06**/3**
QVHZO-T-06**/12**
2 = QVHZO-T-06**/18**
QVHZO-T-06**/36**
3 = QVHZO-T-06**/45**
4 = QVKZOR-T-10**/65**
5 = QVKZOR-T-10**/90**

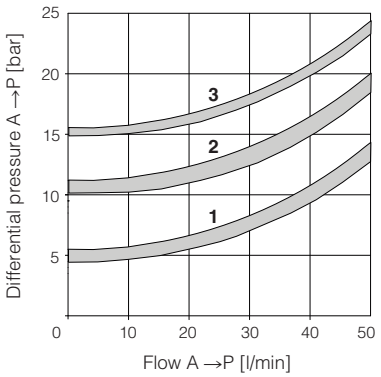

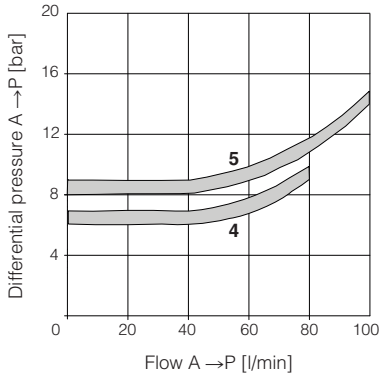

9 APPLICATIONS AND CONNECTIONS

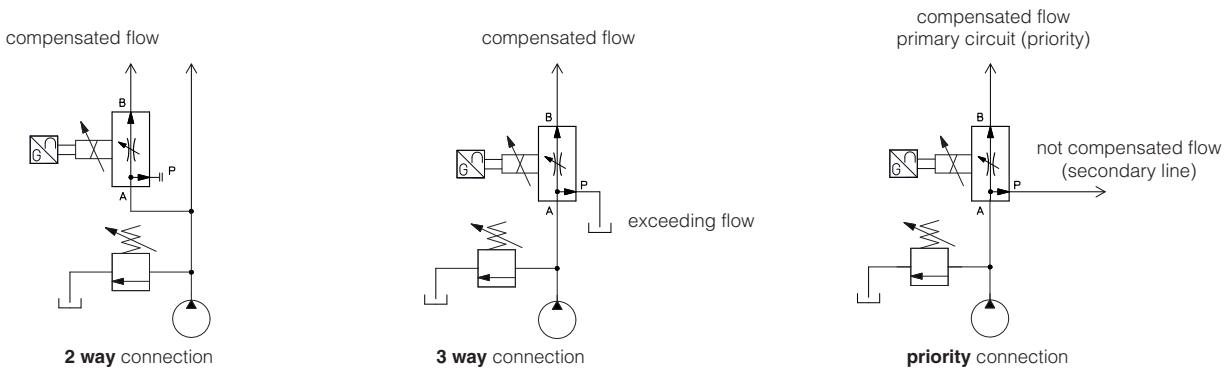

2 way connection
The 2 way connection is normally used to control the flow in one part of the hydraulic circuit or to regulate the speed of a specific actuator.
The metered flow in the controlled line is kept constant, independently to the load variations
If the valve is directly installed on the pump main line, the exceeding flow is returned to tank though the pressure relief valve.

3 way connection
The 3 way connection is normally used when the valve directly controls the pump flow (main line)
The metered flow in the controlled line is kept constant, independently to the load variations
The exceeding flow (not metered by the valve) it is returned to tank trough the valve P port = T line (3rd way)

Priority connection
The priority connection guarantees the pressure compensated flow supply to the primary circuit.
The exceeding flow (not required by the primary circuit) is bypassed through the valve P port, to secondary circuit operating at lower pressure and not requiring compensated flow regulations.

10 ELECTRICAL CONNECTION

10.1 Solenoid connector - supplied with the valve

PIN	SIGNAL	TECHNICAL SPECIFICATION	Connector code 666
1	**COIL**	Power supply	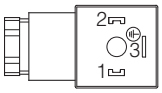
2	**COIL**	Power supply	
3	**GND**	Ground	

10.2 LVDT transducer connector - supplied with the valve

PIN	SIGNAL	TECHNICAL SPECIFICATION	Connector code 345
1	**TR**	Output signal	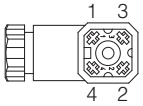
2	**VT-**	Power supply -15VDC	
3	**VT+**	Power supply +15VDC	
4	**GND**	Ground	

11 FASTENING BOLTS AND SEALS

	QVHZO	QVKZOR
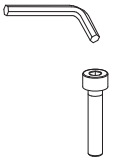	**Fastening bolts:** 4 socket head screws M5x50 class 12.9 Tightening torque = 8 Nm	**Fastening bolts:** 4 socket head screws M6x40 class 12.9 Tightening torque = 15 Nm
	Seals: 4 OR 108; Diameter of ports A, B, P, T: Ø 7,5 mm (max)	**Seals:** 5 OR 2050; Diameter of ports A, B, P, T: Ø 11,2 mm (max)

12 INSTALLATION DIMENSIONS [mm]

QVHZO-T

ISO 4401: 2005
Mounting surface: 4401-03-02-0-05 (see tab. P005)

Mass [kg]	
QVHZO-T	2,3

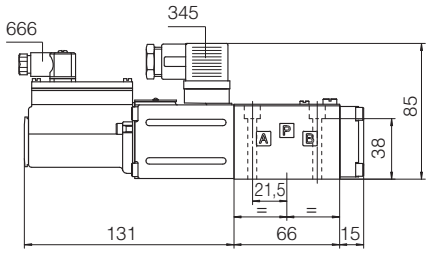

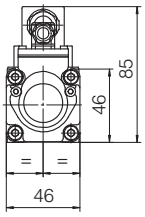

QVKZOR-T

ISO 4401: 2005
Mounting surface: 4401-05-04-0-05 (see tab. P005)

Mass [kg]	
QVKZOR-T	3,9

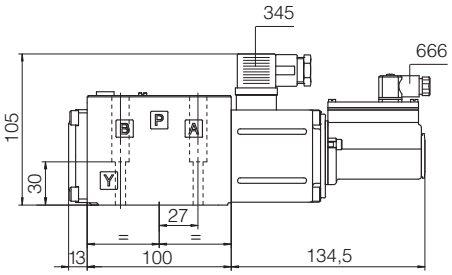

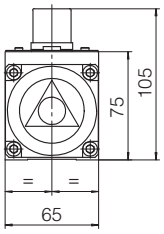

13 RELATED DOCUMENTATION

FS900	Operating and maintenance information for proportional valves	**GS510**	Fieldbus
GS230	E-BM-TEB digital driver	**K800**	Electric and electronic connectors
GS240	E-BM-TES digital driver	**P005**	Mounting surfaces for electrohydraulic valves
GS500	Programming tools		

14 FASTENING BOLTS AND SEALS FOR RZGE

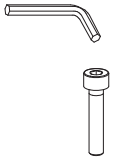	**Fastening bolts:** 4 socket head screws M5x50 class 12.9 Tightening torque = 8 Nm
	Seals: 3 OR 108 Diameter of ports P, T, A: Ø 5 mm Port B not used

15 INSTALLATION DIMENSIONS FOR RZGE [mm]

ISO 4401: 2005
Mounting surface: 4401-03-02-0-05 (see table P005)
(without port B)

Mass [kg]	
RZGE	1,5
RZGE with E-MI-AS-IR	2,0

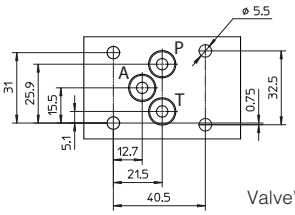

Valve's bottom view

RZGE-A

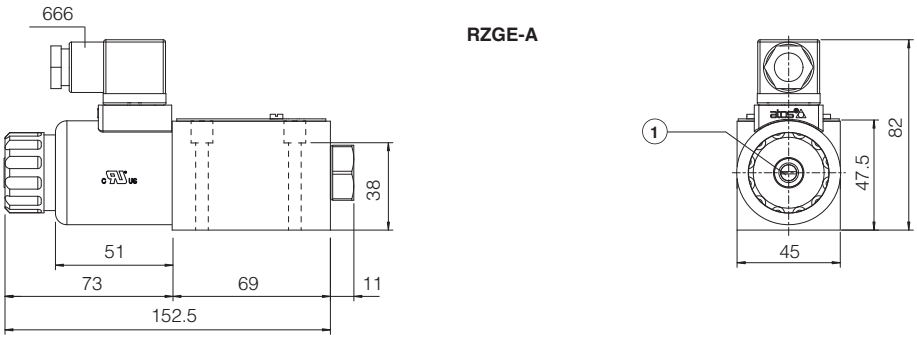

RZGE-A
(with E-MI-AS-IR digital driver)

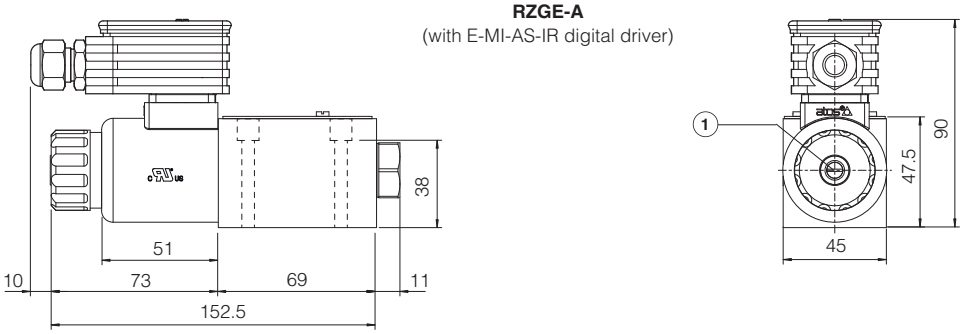

(1) = Air bleeding, see section 11

16 INSTALLATION DIMENSIONS FOR CART RZGE [mm]

Cavity dimensions for **CART RZGE-A**

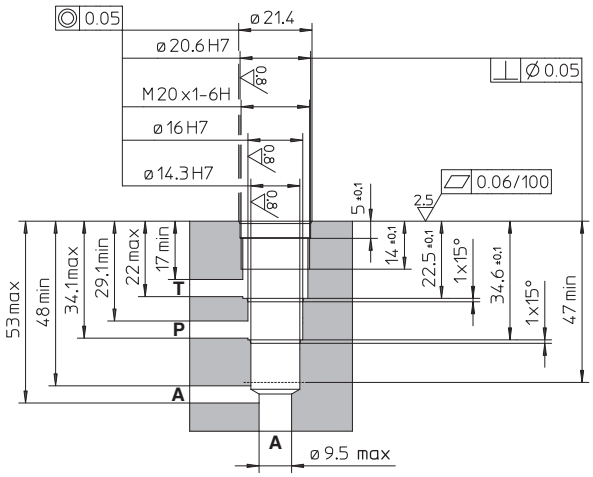

CART RZGE-A

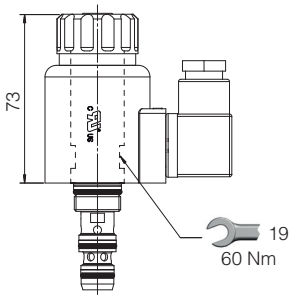

CART RZGE-A
(with E-MI-AS-IR digital driver)

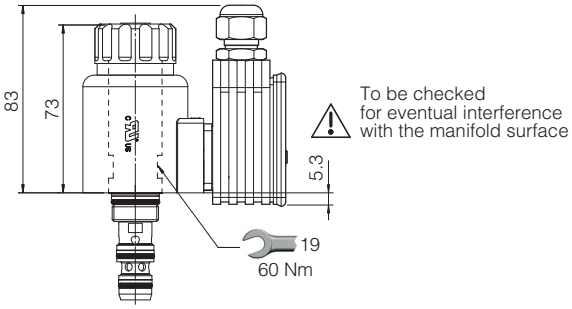

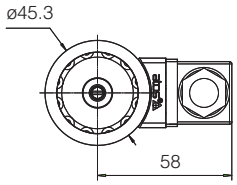

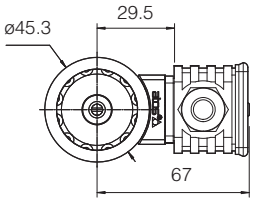

Mass [kg]	
CART RZGE	0,6
CART RZGE with E-MI-AS-IR	1,1

17 RELATED DOCUMENTATION

FS001	Basics for digital electrohydraulics	**GS050**	E-BM-AES digital driver
FS900	Operating and maintenance information for proportional valves	**GS500**	Programming tools
G010	E-MI-AC analog driver	**K800**	Electric and electronic connectors
G020	E-MI-AS-IR digital driver	**P005**	Mounting surfaces for electrohydraulic valves
G030	E-BM-AS digital driver		

Digital proportional flow valves

direct, pressure compensated, without transducer

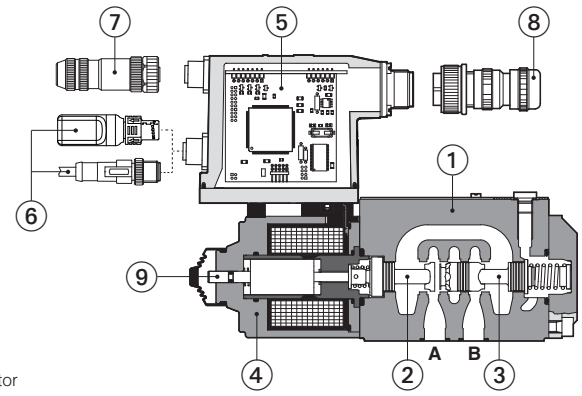

① Valve body
② Throttle
③ Compensator
④ Proportional solenoid
⑤ On-board digital driver
⑥ Bluetooth/USB connection
⑦ Communication connector
⑧ Main connector
⑨ Standard manual override protected by rubber cap

QVKZOR-AES-BC

QVHZO-A, QVHZO-AEB, QVHZO-AES
QVKZOR-A, QVKZOR-AEB, QVKZOR-AES

Proportional flow control valves, direct, pressure compensated without position transducer for open loop flow regulations.

A to be coupled with off-board drivers.

AEB basic execution, with on-board digital driver, with analog reference signal or IO-Link interface for digital reference signals, valve settings, and real-time diagnostics.

AES full execution, with on-board digital driver which includes also fieldbus interfaces for digital reference signals, valve settings, and real-time diagnostics.

For **AEB** and **AES**, Bluetooth/USB connection is always present for valve settings via mobile App and Atos PC software.

QVHZO:	**QVKZOR**:
Size: **06** - ISO 4401	Size: **10** - ISO 4401
Max flow: **45 l/min**	Max flow: **90 l/min**
Max pressure: **210 bar**	Max pressure: **210 bar**

1 MODEL CODE

QVKZOR	-	AES	-	BC	-	10	/	65	/	*	/	*	/	*	*	/	*

Pressure compensated flow control valves, direct
QVHZO = size 06
QVKZOR = size 10

A = off-board driver, see section 3
AEB = basic on-board digital driver
AES = full on-board digital driver

IO-Link interface, only for AEB, see section 7 :
NP = Not present **IL** = IO-Link

Fieldbus interfaces, only for AES, see section 8 :
BC = CANopen **EH** = EtherCAT
BP = PROFIBUS DP

Valve size ISO 4401: **0** = 06 **1** = 10

Max regulated flow:
QVHZO:
3 = 3,5 l/min **36** = 35 l/min
12 = 12 l/min **45** = 45 l/min
18 = 18 l/min

Series number

Seals material, see section 12 :
- = NBR
PE = FKM
BT = NBR low temp.

Coil voltage, only for **A** - see section 18 :
- = standard coil for 24VDC Atos drivers
6 = optional coil for 12VDC Atos drivers
18 = optional coil for low current drivers

Bluetooth option, only for **AEB** and **AES (1)**, see section 6 :
T = Bluetooth adapter supplied with the valve

Hydraulic options (1):
D = quick venting of port B

Hand lever options, only for **QVHZO-A**:
MO = horizontal hand lever
MV = vertical hand lever

Electronic options, only for **AEB** and **AES (1) (2)**:
C = current feedback for pressure transducer 4÷20 mA (only for **W**)
I = current reference input 4÷20 mA
Q = enable signal
Z = double power supply, enable, fault and monitor signals -12 pin connector
W = power limitation function

(1) For possible combined options, see section 17 **(2)** /I, /Q, /Z options not available for AEB-IL

2 HYDRAULIC SYMBOLS

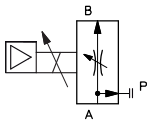

2 way connection

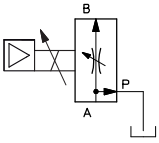

3 way connection

The valves can be used in 2 or 3 way connection, depending to the application requirements.

In **2 way** the P port must not be connected (blocked)
In **3 way** the P port has to be connected to tank or to other user lines
The port T must be always not connected (blocked)

For application examples of 2 and 3 way connections, see section 14

Note: hydraulic symbols are rapresented with on-board digital driver

3 OFF-BOARD ELECTRONIC DRIVERS - only for **A**

Drivers model	E-MI-AC-01F		E-MI-AS-IR		E-BM-AS-PS		E-BM-AES
Type	Analog		Digital				
Voltage supply (VDC)	12	24	12	24	12	24	24
Valve coil option	/6	std	/6	std	/6	std	std
Format	plug-in to solenoid				DIN-rail panel		
Tech table	G010		G020		G030		GS050

4 GENERAL NOTES

Atos digital proportionals valves are CE marked according to the applicable directives (e.g. Immunity and Emission EMC Directive).
Installation, wirings and start-up procedures must be performed according to the general prescriptions shown in tech table **FS900** and in the user manuals included in the E-SW-SETUP programming software.

5 VALVE SETTINGS AND PROGRAMMING TOOLS - see tech. table **GS500**

5.1 Atos CONNECT mobile App

Free downloadable App for smartphones and tablets which allows quick access to valve main functional parameters and basic diagnostic information via Bluetooth, thus avoiding physical cable connection and significantly reducing commissioning time.
Atos CONNECT supports Atos digital valve drivers equipped with E-A-BTH adapter or with built-in Bluetooth. It does not support valves with p/Q control or axis controls.

Download on the App Store

GET IT ON Google Play

5.2 E-SW-SETUP PC software

Free downloadable software for PC allows to set all valve functional parameters and to access complete diagnostic information of digital valve drivers via Bluetooth/USB service port.
Atos E-SW-SETUP PC software supports all Atos digital valve drivers and it is available at www.atos.com in MyAtos area.

WARNING: drivers USB port is not isolated! For E-C-SB-USB/M12 cable, the use of E-A-SB-USB/OPT isolator adapter is highly recommended for PC protection

Bluetooth or USB connection

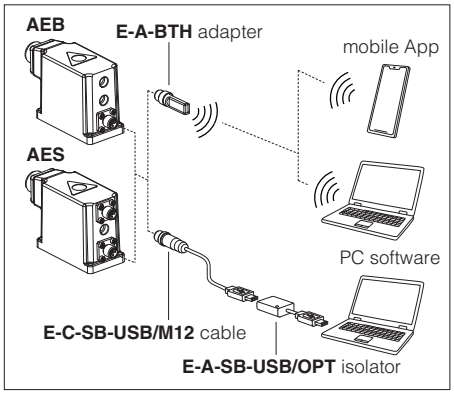

6 BLUETOOTH OPTION - see tech. table **GS500**

T option adds Bluetooth® connectivity to Atos valve drivers thanks to E-A-BTH adapter, which can be left permanently installed on-board, to allow the Bluetooth connection with the valve drivers at any time. E-A-BTH adapter can also be purchased separately and used to connect with any supported Atos digital product.
Bluetooth connection to the valve can be protected against unauthorised access by setting a personal password. The adapter leds visually indicates the status of valve driver and Bluetooth connection.

WARNING: for the list of countries where the Bluetooth adapter has been approved, see tech. table **GS500**
T option is not available for the Indian market, so the Bluetooth adapter must be ordered separately.

7 IO-LINK - only for **AEB**, see tech. table **GS520**

IO-Link allows low cost digital communication between the valve and machine central unit. The valve is directly connected to a port of an IO-Link master (point-to-point connection) via low-cost unshielded cables for digital reference, diagnostic and settings. The IO-Link master works as a hub exchanging this information with the machine central unit via fieldbus.

8 FIELDBUS - only for **AES**, see tech. table **GS510**

Fieldbus allows valve direct communication with machine control unit for digital reference, valve diagnostics and settings. These execution allow to operate the valves through fieldbus or analog signals available on the main connector.

9 GENERAL CHARACTERISTICS

Assembly position	Any position
Subplate surface finishing to ISO 4401	Acceptable roughness index: Ra ≤ 0,8, recommended Ra 0,4 – Flatness ratio 0,01/100
MTTFd valves according to EN ISO 13849	150 years, for further details see technical table P007
Ambient temperature range	**A:** **Standard** = -20°C ÷ +70°C **/PE** option = -20°C ÷ +70°C **/BT** option = -40°C ÷ +60°C **AEB, AES:** **Standard** = -20°C ÷ +60°C **/PE** option = -20°C ÷ +60°C **/BT** option = -40°C ÷ +60°C
Storage temperature range	**A:** **Standard** = -20°C ÷ +80°C **/PE** option = -20°C ÷ +80°C **/BT** option = -40°C ÷ +70°C **AEB, AES:** **Standard** = -20°C ÷ +70°C **/PE** option = -20°C ÷ +70°C **/BT** option = -40°C ÷ +70°C
Surface protection	Zinc coating with black passivation, galvanic treatment (driver housing for AEB and AES)
Corrosion resistance	Salt spray test (EN ISO 9227) > 200 h
Vibration resistance	See technical table G004 (for AEB and AES)
Compliance	CE according to EMC directive 2014/30/EU (Immunity: EN 61000-6-2; Emission: EN 61000-6-3) RoHS Directive 2011/65/EU as last update by 2015/863/EU REACH Regulation (EC) n°1907/2006

10 HYDRAULIC CHARACTERISTICS - based on mineral oil ISO VG 46 at 50 °C

Valve model		QVHZO					QVKZOR	
Max regulated flow	[l/min]	3,5	12	18	35	45	65	90
Min regulated flow	[cm³/min]	15	20	30	50	60	85	100
Regulating Δp	[bar]	4 - 6		10 - 12		15	6 - 8	10 - 12
Max flow on port A	[l/min]	40			50	55	70	100
Max pressure	[bar]	210						
Response time 0-100% step signal	[ms]	≤ 30					≤ 45	
Hysteresis		≤ 5 [% of the regulated max flow]						
Linearity		≤ 3 [% of the regulated max flow]						
Repeatability		≤ 1 [% of the regulated max flow]						

Note: above performance data refer to valves coupled with Atos electronic drivers, see section 3

11 ELECTRICAL CHARACTERISTICS

Power supplies	Nominal : +24 VDC Rectified and filtered : VRMS = 20 ÷ 32 VMAX (ripple max 10 % VPP)					
Max power consumption	QVHZO			QVKZOR		
	A = 30 W	**AEB**, **AES** = 50 W		**A** = 35 W	**AEB**, **AES** = 50 W	
Coil voltage code	standard	option /6	option /18	standard	option /6	option /18
Max. solenoid current	2,2 A	2,75 A	1,2 A	2,6 A	3,25 A	1,2 A
Coil resistance R at 20°C	3 ÷ 3,3 Ω	2 ÷ 2,2 Ω	13 ÷ 13,4 Ω	3,8 ÷ 4,1 Ω	2,2 ÷ 2,4 Ω	12 ÷ 12,5 Ω
Analog input signals	Voltage: range ±10 VDC (24 VMAX tolerant) Input impedance: Ri > 50 kΩ Current: range ±20 mA Input impedance: Ri = 500 Ω					
Monitor output	Output range: voltage ±5 VDC @ max 5 mA					
Enable input	Range: 0 ÷ 9 VDC (OFF state), 15 ÷ 24 VDC (ON state), 9 ÷ 15 VDC (not accepted); Input impedance: Ri > 87 kΩ					
Fault output	Output range : 0 ÷ 24 VDC (ON state ≅ VL+ [logic power supply] ; OFF state ≅ 0 V) @ max 50 mA; external negative voltage not allowed (e.g. due to inductive loads)					
Pressure transducer power supply (only for /W option)	+24VDC @ max 100 mA (E-ATR-8 see tech table **GS465**)					
Alarms	Solenoid not connected/short circuit, cable break with current reference signal, over/under temperature, current control monitoring, power supplies level, pressure transducer failure (/W option)					
Insulation class	H (180°) Due to the occurring surface temperatures of the solenoid coils, the European standards ISO 13732-1 and EN982 must be taken into account					
Protection degree to DIN EN60529	**A** = IP65; **AEB**, **AES** = IP66 / IP67 with mating connectors					
Duty factor	Continuous rating (ED=100%)					
Tropicalization	Tropical coating on electronics PCB					
Additional characteristics	Short circuit protection of solenoid's current supply; current control by P.I.D. with rapid solenoid switching; protection against reverse polarity of power supply					
Communication interface	USB Atos ASCII coding	IO-Link Interface and System Specification 1.1.3	CANopen EN50325-4 + DS408	PROFIBUS DP EN50170-2/IEC61158	EtherCAT IEC 61158	
Communication physical layer	not insulated USB 2.0+USB OTG	SDCI class port B	optical insulated CAN ISO11898	optical insulated RS485	Fast Ethernet, insulated 100 Base TX	
Recommended wiring cable	LiYCY shielded cables, see section 22					

Note: a maximum time of 500 ms (depending on communication type) has to be considered between the driver energizing with the 24 VDC power supply and when the valve is ready to operate. During this time the current to the valve coils is switched to zero.

12 SEALS AND HYDRAULIC FLUIDS - for other fluids not included in below table, consult our technical office

Seals, recommended fluid temperature		NBR seals (standard) = -20°C ÷ +60°C (+80°C for **A**), with HFC hydraulic fluids = -20°C ÷ +50°C FKM seals (/PE option) = -20°C ÷ +80°C NBR low temp. seals (/BT option) = -40°C ÷ +60°C, with HFC hydraulic fluids = -20°C ÷ +50°C		
Recommended viscosity		20 ÷ 100 mm²/s - max allowed range 15 ÷ 380 mm²/s		
Max fluid contamination level	normal operation	ISO4406 class 18/16/13 NAS1638 class 7		see also filter section at www.atos.com or KTF catalog
	longer life	ISO4406 class 16/14/11 NAS1638 class 5		
Hydraulic fluid		**Suitable seals type**	**Classification**	**Ref. Standard**
Mineral oils		NBR, FKM, NBR low temp.	HL, HLP, HLPD, HVLP, HVLPD	DIN 51524
Flame resistant without water		FKM	HFDU, HFDR	ISO 12922
Flame resistant with water		NBR, NBR low temp.	HFC	

13 DIAGRAMS - based on mineral oil ISO VG 46 at 50 °C

13.1 Regulation diagrams

1 = QVHZO-*-06**/3**
2 = QVHZO-*-06**/12**
3 = QVHZO-*-06**/18**
4 = QVHZO-*-06**/36**
5 = QVHZO-*-06**/45**
6 = QVKZOR-*-10**/65**
7 = QVKZOR-*-10**/90**

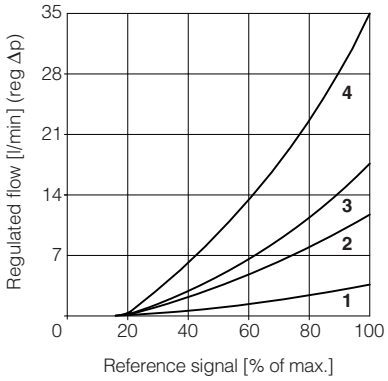

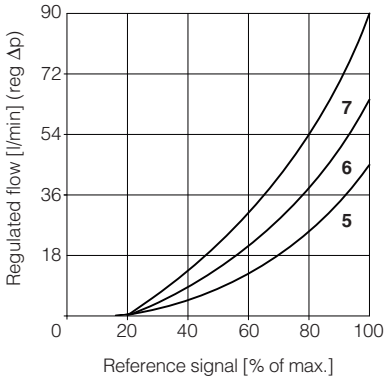

13.2 Regulated flow/outlet pressure diagrams
with inlet pressure = 210 bar

1 = QVHZO
2 = QVKZOR

Dotted line for 3-way versions

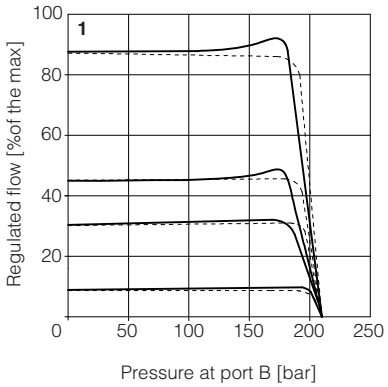

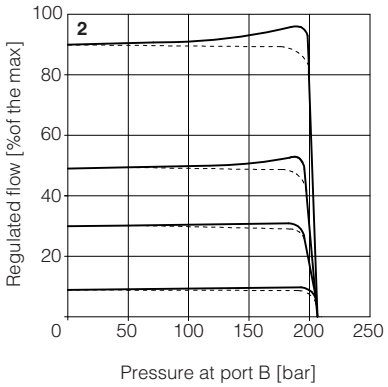

13.3 Flow A →P/Δp diagrams
3-way configuration

1 = QVHZO-*-06**/3**
QVHZO-*-06**/12**
2 = QVHZO-*-06**/18**
QVHZO-*-06**/36**
3 = QVHZO-*-06**/45**
4 = QVKZOR-*-10**/65**
5 = QVKZOR-*-10**/90**

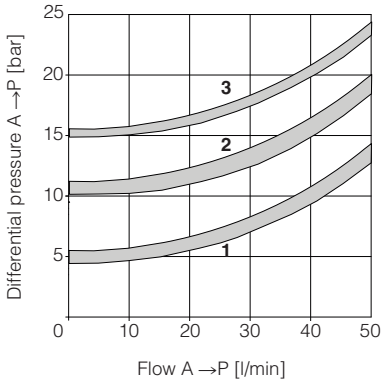

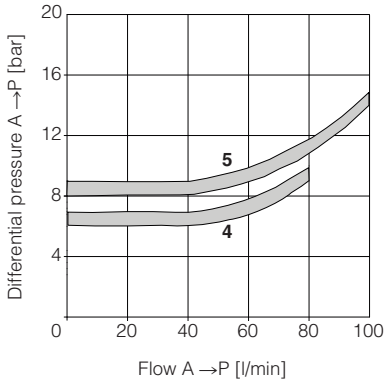

14 APPLICATIONS AND CONNECTIONS

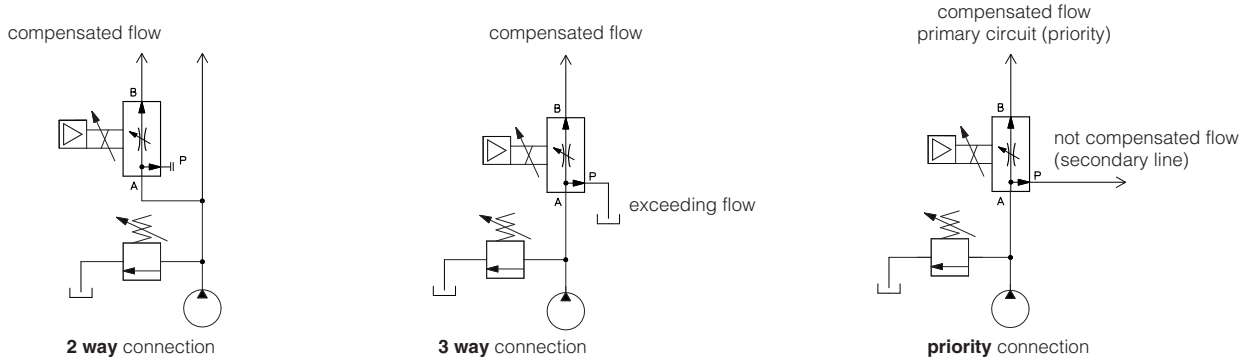

2 way connection
The 2 way connection is normally used to control the flow in one part of the hydraulic circuit or to regulate the speed of a specific actuator.
The metered flow in the controlled line is kept constant, independently to the load variations.
If the valve is directly installed on the pump main line, the exceeding flow is returned to tank though the pressure relief valve.

3 way connection
The 3 way connection is normally used when the valve directly controls the pump flow (main line).
The metered flow in the controlled line is kept constant, independently to the load variations.
The exceeding flow (not metered by the valve) it is returned to tank trough the valve P port = T line (3rd way).

Priority connection
The priority connection guarantees the pressure compensated flow supply to the primary circuit.
The exceeding flow (not required by the primary circuit) is bypassed through the valve P port, to secondary circuit operating at lower pressure and not requiring compensated flow regulations.

15 HYDRAULIC OPTIONS

D = This option provides a quick venting of the use port B when the valve is closed or de-energized.
The valve must be connected in 3 way, with P port connected to tank.
When the proportional throttle is fully closed, the valve's port B is internally connected to port P (tank), permitting a quickly decompression of the pressure in the use line.

In the diagram aside are represented the venting times of **QVHZO** and **QVKZOR** with option /D respect to standard versions:

1 = standard version

2 = option /D

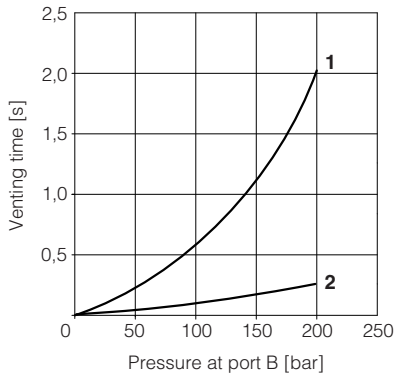

Hand lever option - only for **QVHZO-A**

It allows to operate the valve in absence of electrical power supply.
For detailed description of QVHZO-A with hand lever option see tech. table **E138**.

MO = Horizontal hand lever

MV = Vertical hand lever

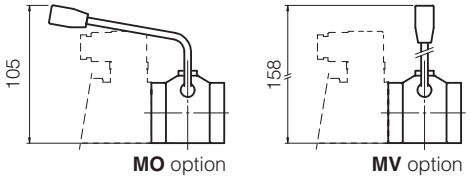

The following supplementary options allow to operate **QVHZO-A** and **QVKZOR-A** in absence of electrical power supply by means of a micrometric screw replacing the standard solenoid manual override, see tech. table **TK150**

N = Manual micrometric adjustment

NV = As option /N plus handwheel

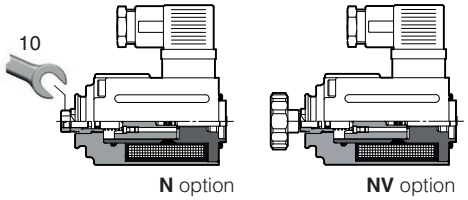

16 ELECTRONIC OPTIONS - only for **AEB** and **AES**

I = This option provides 4 ÷ 20 mA current reference, instead of the standard 0 ÷ 10 VDC.
Input signal can be reconfigured via software selecting between voltage and current, within a maximum range of ±10 VDC or ±20 mA.
It is normally used in case of long distance between the machine control unit and the valve or where the reference signal can be affected by electrical noise; the valve functioning is disabled in case of reference signal cable breakage.
Note: **/I** option not available for **AEB-IL**

Q = This option permits to inhibit the valve function without removing the power supply to the driver. Upon disable command the current to the solenoid is zeroed and the valve's spool moves to rest position.
The option /Q is suggested for all cases where the valve has to be frequently inhibited during the machine cycle – see 19.5 for signal specifications.
Note: **/Q** option not available for **AEB-IL**

Z = This option provides, on the 12 pin main connector, the following additional features:
Fault output signal - see 19.6
Enable input signal - see above option /Q
Power supply for driver's logics and communication - see 19.2
Note: **/Z** option not available for **AEB-IL**

C = Only in combination with option **/W**
This option is available to connect pressure transducers with 4 ÷ 20 mA current output signal, instead of the standard 0 ÷ 10 VDC.
Input signal can be reconfigured via software selecting between voltage and current, within a maximum range of ±10 VDC or ±20 mA.

W = Only for valves coupled with pressure compensator, see tech table **D150**.

It provides the hydraulic power limitation function. The driver receives the flow reference signal by the analog input INPUT+ and a pressure transducer, installed in the hydraulic system, has to be connected to the driver's analog input TR.
When the actual requested hydraulic power **p**x**Q** (TR x INPUT+) reaches the max power limit (p1xQ1), internally set by software, the driver automatically reduces the flow regulation of the valve. The higher is the pressure feedback the lower is the valve's regulated flow:

$$\text{Flow regulation} = \text{Min}\left(\frac{\text{PowerLimit [sw setting]}}{\text{Transducer Pressure [TR]}}\ ;\ \text{Flow Reference [INPUT+]}\right)$$

Notes: for **AEB-IL** the drive receives the flow reference signal directly by IO-Link interface
for **AES** the drive can receive the flow reference signal directly by fieldbus interface

Hydraulic Power Limitation - only for option **/W**

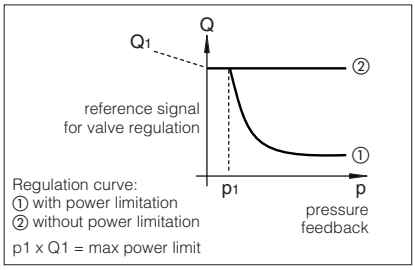

17 POSSIBLE COMBINED OPTIONS

For **AEB-NP** and **AES**

Hydraulic options: all combination possible

Electronic options: /IQ, /IZ, /IW, /CW, /CWI

For **AEB-IL**

Hydraulic options: all combination possible

Electronic options: /CW

Note: **/T** Bluetooth adapter option can be combined with all other options

18 COIL VOLTAGE OPTIONS - only for **A**

6 = Optional coil to be used with Atos drivers with power supply 12 VDC.

18 = Optional coil to be used with electronic drivers not supplied by Atos.

19 POWER SUPPLY AND SIGNALS SPECIFICATIONS - only for **AEB** and **AES**

Generic electrical output signals of the valve (e.g. fault or monitor signals) must not be directly used to activate safety functions, like to switch-ON/OFF the machine's safety components, as prescribed by the European standards (Safety requirements of fluid technology systems and components-hydraulics, ISO 4413).

For **AEB-IL** see section 20 for IO-Link signals specifications and see 16.7 for presssure trasducer signal for **/W** option.

19.1 Power supply (V+ and V0)

The power supply must be appropriately stabilized or rectified and filtered: apply at least a 10000 μF/40 V capacitance to single phase rectifiers or a 4700 μF/40 V capacitance to three phase rectifiers. In case of separate power supply see 19.2.

⚠ A safety fuse is required in series to each power supply: 2,5 A time lag fuse.

19.2 Power supply for driver's logic and communication (VL+ and VL0) - only for **/Z** and **/W** options

The power supply for driver's logic and communication must be appropriately stabilized or rectified and filtered: apply at least a 10000 μF/40 V capacitance to single phase rectifiers or a 4700 μF/40 V capacitance to three phase rectifiers.
The separate power supply for driver's logic on pin 9 and 10, allow to remove solenoid power supply from pin 1 and 2 maintaining active the diagnostics, USB and fieldbus communications.

⚠ A safety fuse is required in series to each driver's logic and communication power supply: 500 mA fast fuse.

19.3 Reference input signal (INPUT+)

The driver controls in closed loop the current to the valve proportionally to the external reference input signal.
Reference input signal is factory preset according to selected valve code, defaults are 0 ÷ 10 VDC for standard and 4 ÷ 20 mA for /I option.
Input signal can be reconfigured via software selecting between voltage and current, within a maximum range of ±10 VDC or ± 20 mA.
Drivers with fieldbus interface (BC, BP, EH) can be software set to receive reference signal directly from the machine control unit (fieldbus reference). Analog reference input signal can be used as on-off commands with input range 0 ÷ 24VDC.

19.4 Monitor output signals (MONITOR and MONITOR2)

The driver generates an analog output signal (MONITOR) proportional to the actual coil current of the valve; the monitor output signal can be software set to show other signals available in the driver (e.g. analog reference, fieldbus reference).
Monitor output signal is factory preset according to selected valve code, default settings is 0 ÷ 5 VDC (1V = 1A).
Output signal can be reconfigured via software, within a maximum range of ±5 VDC.

Option /W
The driver generates a second analog output signal (MONITOR2) proportional to the actual system pressure.
The output maximum range is ±5 VDC; default setting is 0 ÷ 5 VDC.

19.5 Enable input signal (ENABLE) - not for standard

To enable the driver, supply a 24 VDC on pin 3 (pin C): Enable input signal allows to enable/disable the current supply to the solenoid, without removing the electrical power supply to the driver; it is used to active the communication and the other driver functions when the valve must be disabled for safety reasons. This condition **does not comply** with norms IEC 61508 and ISO 13849.
Enable input signal can be used as generic digital input by software selection.

19.6 Fault output signal (FAULT) - only for **/Z** and **/W** options

Fault output signal indicates fault conditions of the driver (solenoid short circuits/not connected, reference signal broken for 4 ÷ 20 mA input, etc.).
Fault presence corresponds to 0 VDC, normal working corresponds to 24 VDC.
Fault status is not affected by the Enable input signal.

19.7 Remote pressure transducer input signal (TR) - only for **/W** option

Analog pressure transducers can be directly connected to the driver (see 18.5).
Analog input signal is factory preset according to selected driver code, defaults are 0 ÷ 10 VDC for standard and 4 ÷ 20 mA for /C option.
Input signal can be reconfigured via software selecting between voltage and current, within a maximum range of ±10 VDC or ± 20 mA.
Note: transducer feedback can be read as a digital information through fieldbus and IO-Link communication - software selectable.

20 IO-LINK SIGNALS SPECIFICATIONS - only for **AEB-IL**

20.1 Power supply for IO-Link communication (L+ and L-)

The IO-Link master provides dedicated 24 VDC power supply for IO-Link communication.
Maximum power consumption: 2 W
Internal electrical isolation of power L+, L- from P24, N24

20.2 Power supply for driver's logic and valve regulation (P24 and N24)

The IO-Link master provides dedicated 24 VDC power supply for valve regulation, logics and diagnostics.
Maximum power consumption: 50 W
Internal electrical isolation of power P24, N24 from L+, L-

20.3 IO-Link data line (C/Q)

C/Q signal is used to establish communication between IO-Link master and valve.

21 ELECTRONIC CONNECTIONS

21.1 Main connector signals - 7 pin (A1) Standard and /Q option - for AEB-NP and AES

PIN	Standard	/Q	TECHNICAL SPECIFICATIONS	NOTES
A	**V+**		Power supply 24 VDC	Input - power supply
B	**V0**		Power supply 0 VDC	Gnd - power supply
C	**AGND**		Analog ground	Gnd - analog signal
		ENABLE	Enable (24 VDC) or disable (0 VDC) the driver, referred to V0	Input - on/off signal
D	**INPUT+**		Reference input signal: ±10 VDC / ±20 mA maximum range Defaults are 0 ÷ 10 VDC for standard and 4 ÷ 20 mA for /I option	Input - analog signal **Software selectable**
E	**INPUT-**		Negative reference input signal for INPUT+	Input - analog signal
F	**MONITOR** referred to: AGND | V0		Monitor output signal: ±5 VDC maximum range Default is 0 ÷ 5 VDC (1V = 1A)	Output - analog signal **Software selectable**
G	**EARTH**		Internally connected to driver housing	

21.2 Main connector signals - 12 pin (A2) /Z and /W options - for AEB-NP and AES

PIN	/Z	/W	TECHNICAL SPECIFICATIONS	NOTES
1	**V+**		Power supply 24 VDC	Input - power supply
2	**V0**		Power supply 0 VDC	Gnd - power supply
3	**ENABLE**		Enable (24 VDC) or disable (0 VDC) the driver, referred to VL0	Input - on/off signal
4	**INPUT+**		Reference input signal: ±10 VDC / ±20 mA maximum range Defaults are 0 ÷ 10 VDC for standard and 4 ÷ 20 mA for /I option	Input - analog signal **Software selectable**
5	**INPUT-**		Negative reference input signal for INPUT+	Input - analog signal
6	**MONITOR**		Monitor output signal: ±5 VDC maximum range, referred to VL0 Default is 0 ÷ 5 VDC (1V = 1A)	Output - analog signal **Software selectable**
7	**NC**		Do not connect	
8	**NC**		Do not connect	
		MONITOR2	2nd monitor output signal: ±5 VDC maximum range, referred to VL0. Default is 0 ÷ 5 VDC	Output - analog signal
9	**VL+**		Power supply 24 VDC for driver's logic and communication	Input - power supply
10	**VL0**		Power supply 0 VDC for driver's logic and communication	Gnd - power supply
11	**FAULT**		Fault (0 VDC) or normal working (24 VDC), referred to VL0	Output - on/off signal
PE	**EARTH**		Internally connected to driver housing	

Note: do not disconnect VL0 before VL+ when the driver is connected to PC USB port

21.3 IO-Link connector signals - M12 - 5 pin - Coding A, port class B (A) only for AEB-IL

PIN	SIGNAL	TECHNICAL SPECIFICATIONS	NOTES
1	**L+**	Power supply 24 VDC for IO-Link communication	Input - power supply
2	**P24**	Power supply 24 VDC for valve regulation, logics and diagnostics	Input - power supply
3	**L-**	Power supply 0 VDC for IO-Link communication	Gnd - power supply
4	**C/Q**	IO-Link data line	Input / Output - signal
5	**N24**	Power supply 0 VDC for valve regulation, logics and diagnostics	Gnd - power supply

Note: L+, L- and P24, N24 are electrically isolated

21.4 Communication connectors - for AEB (B) and AES (B) - (C)

(B) **USB connector - M12 - 5 pin** always present

PIN	SIGNAL	TECHNICAL SPECIFICATION (1)
1	**+5V_USB**	Power supply
2	**ID**	Identification
3	**GND_USB**	Signal zero data line
4	**D-**	Data line -
5	**D+**	Data line +

(C1) **BC fieldbus execution, connector - M12 - 5 pin (2)**

PIN	SIGNAL	TECHNICAL SPECIFICATION (1)
1	**CAN_SHLD**	Shield
2	**NC**	do not connect
3	**CAN_GND**	Signal zero data line
4	**CAN_H**	Bus line (high)
5	**CAN_L**	Bus line (low)

(C2) **BP fieldbus execution, connector - M12 - 5 pin (2)**

PIN	SIGNAL	TECHNICAL SPECIFICATION (1)
1	**+5V**	Termination supply signal
2	**LINE-A**	Bus line (high)
3	**DGND**	Data line and termination signal zero
4	**LINE-B**	Bus line (low)
5	**SHIELD**	

(C3) (C4) **EH fieldbus execution, connector - M12 - 4 pin (2)**

PIN	SIGNAL	TECHNICAL SPECIFICATION (1)
1	**TX+**	Transmitter
2	**RX+**	Receiver
3	**TX-**	Transmitter
4	**RX-**	Receiver
Housing	**SHIELD**	

(1) Shield connection on connector's housing is recommended

(2) Only for **AES** execution

21.5 Remote pressure transducer connector - M12 - 5 pin - only for **/W** option - for **AEB** and **AES** (D)

PIN	SIGNAL	TECHNICAL SPECIFICATION	Voltage	Current
1	**VF +24V**	Power supply +24VDC	Connect	Connect
2	**TR**	Signal transducer maximum range ±10 VDC / ±20 mA, software selectable Defaults are 0 ÷ 10 VDC for standard and 4 ÷ 20 mA for /C option	Connect	Connect
3	**AGND**	Common GND for transducer power and signals	Connect	/
4	**NC**	Not Connect	/	/
5	**NC**	Not Connect	/	/

Remote pressure transducer connection - example

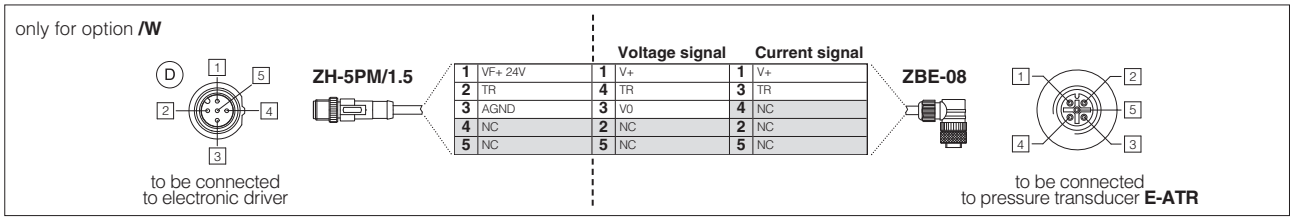

Note: connectors front view

21.6 Solenoid connection - only for **A**

PIN	SIGNAL	TECHNICAL SPECIFICATION	Connector code 666
1	**COIL**	Power supply	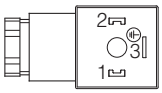
2	**COIL**	Power supply	
3	**GND**	Ground	

21.7 AEB-NP connections layout

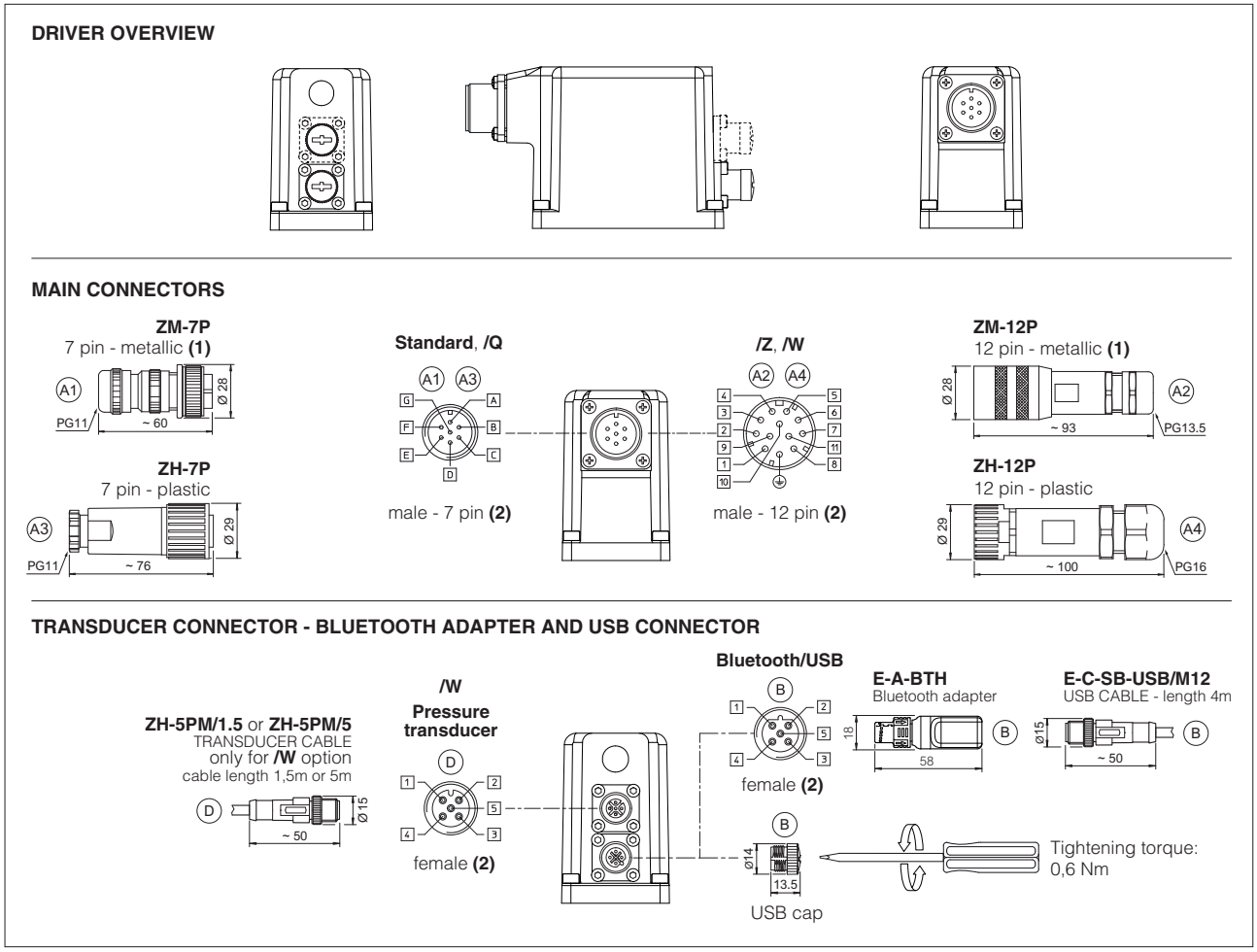

(1) Use of metallic connectors is strongly recommended in order to fulfill EMC requirements **(2)** Pin layout always referred to driver's view

21.8 AEB-IL connections layout

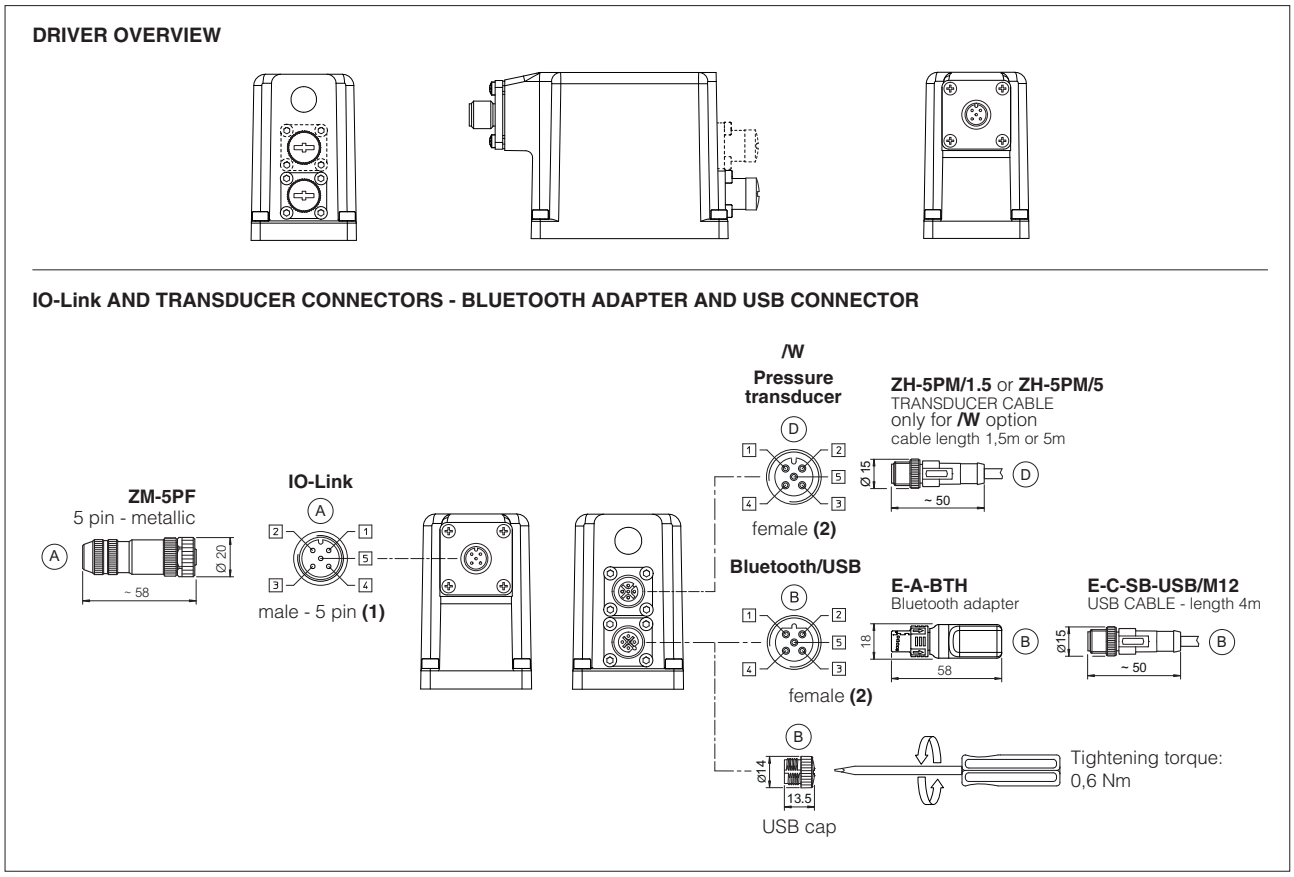

(1) Use of metallic connectors is strongly recommended in order to fulfill EMC requirements **(2)** Pin layout always referred to driver's view

21.9 AES connections layout

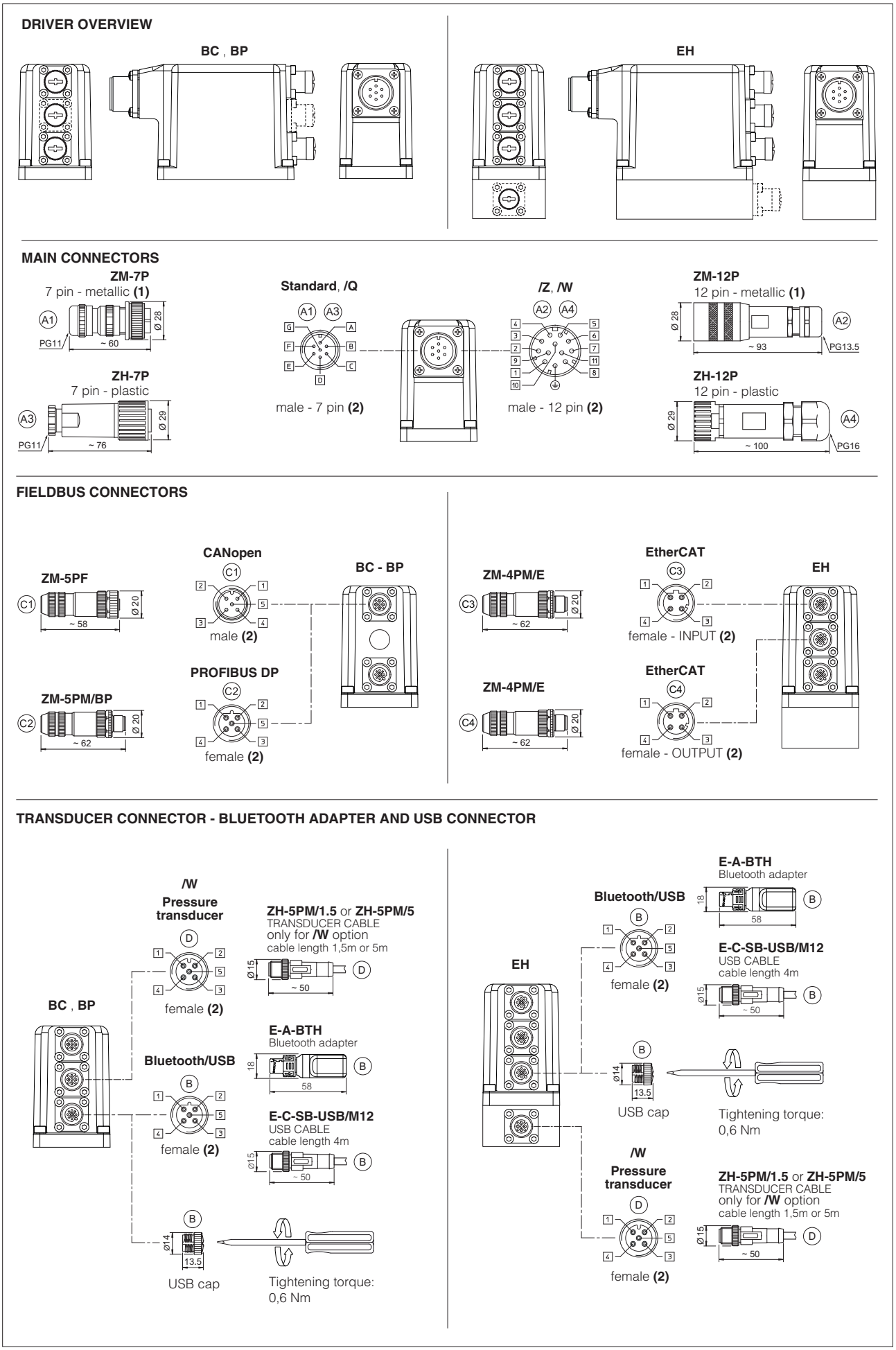

(1) Use of metallic connectors is strongly recommended in order to fulfill EMC requirements

(2) Pin layout always referred to driver's view

22 CONNECTORS CHARACTERISTICS - to be ordered separately

22.1 Main connectors - 7 pin - for AEB-NP and AES

CONNECTOR TYPE	POWER SUPPLY AND SIGNALS	POWER SUPPLY AND SIGNALS
CODE	A1 ZM-7P	A3 ZH-7P
Type	7pin female straight circular	7pin female straight circular
Standard	According to MIL-C-5015	According to MIL-C-5015
Material	Metallic	Plastic reinforced with fiber glass
Cable gland	PG11	PG11
Recommended cable	LiYCY 7 x 0,75 mm² max 20 m (logic and power supply) or LiYCY 7 x 1 mm² max 40 m (logic and power supply)	LiYCY 7 x 0,75 mm² max 20 m (logic and power supply) or LiYCY 7 x 1 mm² max 40 m (logic and power supply)
Conductor size	up to 1 mm² - available for 7 wires	up to 1 mm² - available for 7 wires
Connection type	to solder	to solder
Protection (EN 60529)	IP 67	IP 67

22.2 Main connectors - 12 pin - for AEB-NP and AES

CONNECTOR TYPE	POWER SUPPLY AND SIGNALS	POWER SUPPLY AND SIGNALS
CODE	A2 ZM-12P	A4 ZH-12P
Type	12pin female straight circular	12pin female straight circular
Standard	DIN 43651	DIN 43651
Material	Metallic	Plastic reinforced with fiber glass
Cable gland	PG13,5	PG16
Recommended cable	LiYCY 12 x 0,75 mm² max 20 m (logic and power supply)	LiYCY 10 x 0,14mm² max 40 m (logic) LiYY 3 x 1mm² max 40 m (power supply)
Conductor size	0,5 mm² to 1,5 mm² - available for 12 wires	0,14 mm² to 0,5 mm² - available for 9 wires 0,5 mm² to 1,5 mm² - available for 3 wires
Connection type	to crimp	to crimp
Protection (EN 60529)	IP 67	IP 67

22.3 IO-Link connector - only for AEB-IL

CONNECTOR TYPE	IL IO-Link
CODE	A ZM-5PF
Type	5pin female straight circular
Standard	M12 coding A – IEC 61076-2-101
Material	Metallic
Cable gland	Pressure nut - cable diameter 6÷8 mm
Recommended cable	5 x 0,75 mm² max 20 m
Connection type	screw terminal
Protection (EN 60529)	IP 67

22.4 Fieldbus communication connectors - only for AES

CONNECTOR TYPE	BC CANopen (1)		BP PROFIBUS DP (1)		EH EtherCAT (2)
CODE	C1 ZM-5PF	C2 ZM-5PM	C1 ZM-5PF/BP	C2 ZM-5PM/BP	C1 C2 ZM-4PM/E
Type	5 pin female straight circular	5 pin male straight circular	5 pin female straight circular	5 pin male straight circular	4 pin male straight circular
Standard	M12 coding A – IEC 61076-2-101		M12 coding B – IEC 61076-2-101		M12 coding D – IEC 61076-2-101
Material	Metallic		Metallic		Metallic
Cable gland	Pressure nut - cable diameter 6÷8 mm		Pressure nut - cable diameter 6÷8 mm		Pressure nut - cable diameter 4÷8 mm
Cable	CANbus Standard (DR 303-1)		PROFIBUS DP Standard		Ethernet standard CAT-5
Connection type	screw terminal		screw terminal		terminal block
Protection (EN 60529)	IP67		IP 67		IP 67

(1) E-TRM-** terminators can be ordered separately - see tech table **GS500**

(2) Internally terminated

22.5 Remote pressure transducer connectors - only for /W option

CONNECTOR TYPE	TRANSDUCER	
CODE	D1 ZH-5PM/1.5	D1 ZH-5PM/5
Type	5 pin male straight circular	
Standard	M12 coding A – IEC 61076-2-101	
Material	Plastic	
Cable gland	Connector moulded on cables 1,5 m length	5 m length
Cable	5 x 0,25 mm²	
Connection type	molded cable	
Protection (EN 60529)	IP 67	

23 INSTALLATION DIMENSIONS FOR QVHZO [mm]

ISO 4401: 2005
Mounting surface: 4401-03-02-0-05 (see tab. P005)

Mass [kg]		
A	AEB, AES	AES-EH
2,3	2,8	2,9

QVHZO-A

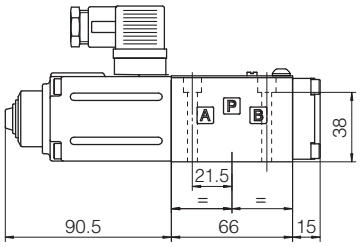

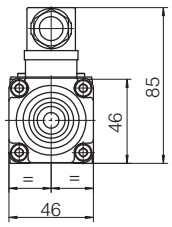

QVHZO-AEB-NP
QVHZO-AEB-IL

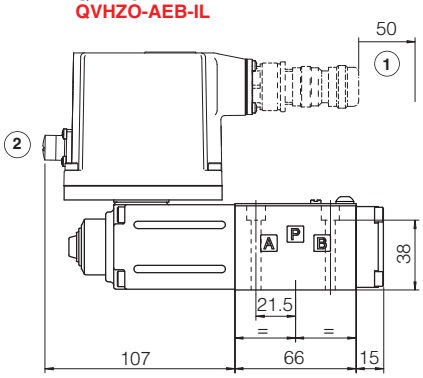

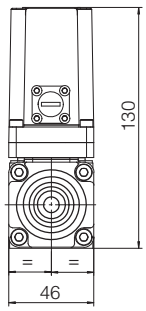

QVHZO-AES-BC
QVHZO-AES-BP

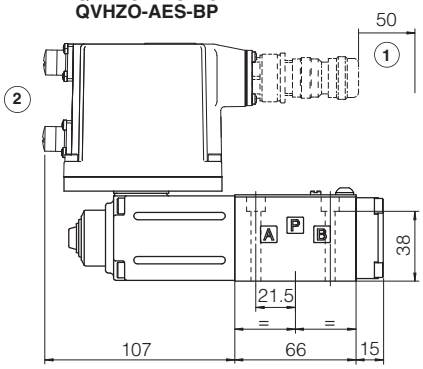

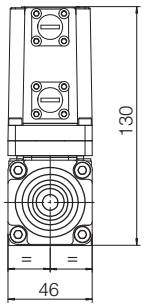

QVHZO-AES-EH

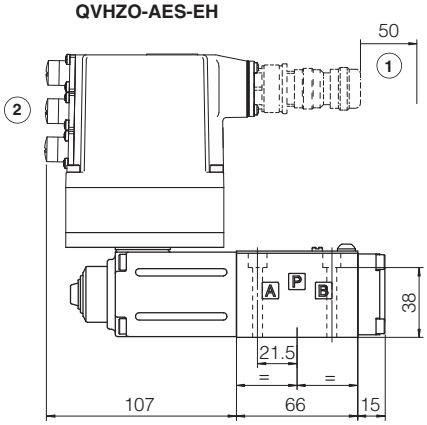

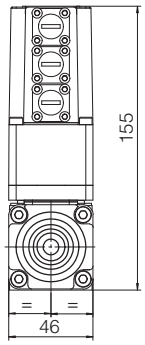

(1) = Space required for connection cable and for connector removal

(2) = The dimensions of connectors and Bluetooth adapter must be considered, see section 21.7, 21.8 and 21.9

24 INSTALLATION DIMENSIONS FOR QVHZOR [mm]

ISO 4401: 2005
Mounting surface: 4401-05-04-0-05 (see tab. P005)

Mass [kg]		
A	AEB, AES	AES-EH
3,8	4,3	4,4

QVKZOR-A

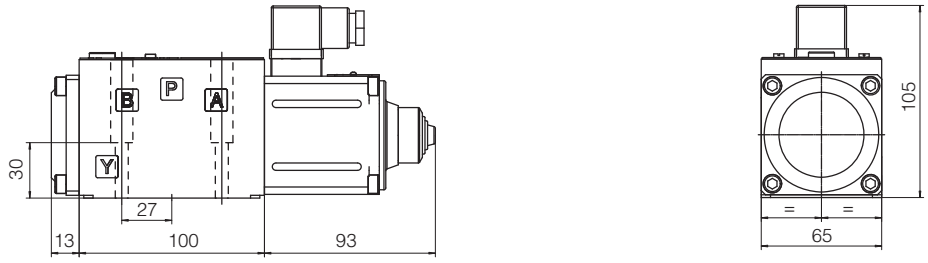

QVKZOR-AEB-NP
QVKZOR-AEB-IL

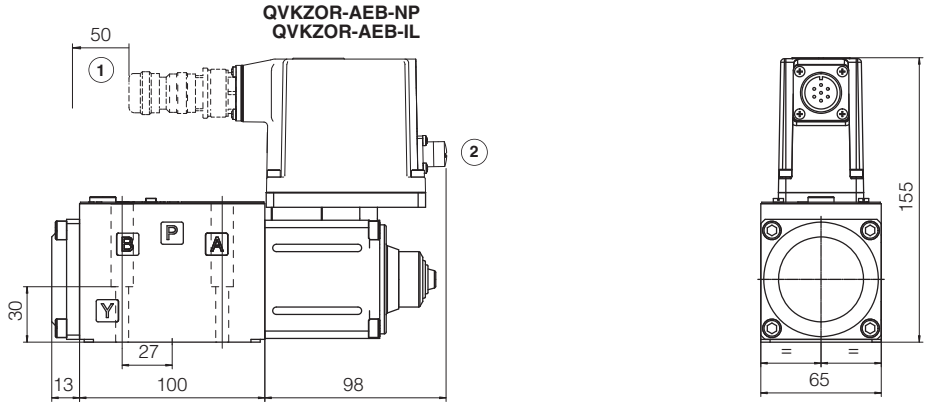

QVKZOR-AES-BC
QVKZOR-AES-BP

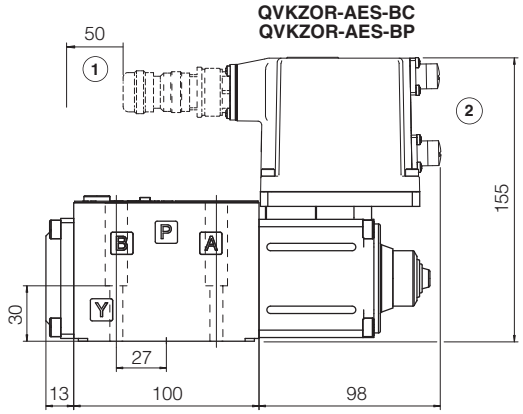

QVKZOR-AES-EH

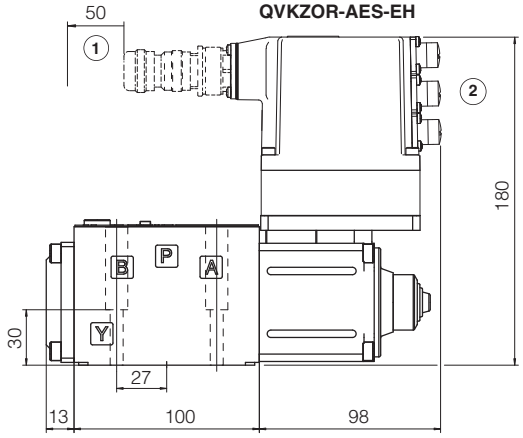

(1) = Space required for connection cable and for connector removal

(2) = The dimensions of connectors and Bluetooth adapter must be considered, see section 21.7, 21.8 and 21.9

25 FASTENING BOLTS AND SEALS

	QVHZO	QVKZOR
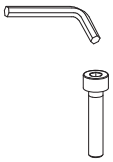	**Fastening bolts:** 4 socket head screws M5x50 class 12.9 Tightening torque = 8 Nm	**Fastening bolts:** 4 socket head screws M6x40 class 12.9 Tightening torque = 15 Nm
	Seals: 4 OR 108 Diameter of ports A, B, P, T: Ø 7,5 mm	**Seals:** 5 OR 2050 Diameter of ports A, B, P, T: Ø 11,2 mm

26 RELATED DOCUMENTATION

FS001	Basics for digital electrohydraulics	**K800**	Electric and electronic connectors
FS900	Operating and maintenance information for proportional valves	**P005**	Mounting surfaces for electrohydraulic valves
G010	E-MI-AC analog driver	**QB100**	Quickstart for AEB valves commissioning
G020	E-MI-AS-IR digital driver	**QF100**	Quickstart for AES valves commissioning
G030	E-BM-AS digital driver	**E-MAN-MI-AS**	E-MI-AS-IR user manual (off-board)
GS050	E-BM-AES digital driver	**E-MAN-BM-AS**	E-BM-AS user manual (off-board)
GS500	Programming tools	**E-MAN-BM-AES**	E-BM-AES user manual (off-board)
GS510	Fieldbus	**E-MAN-RI-AEB**	AEB user manual
GS520	IO-Link interface	**E-MAN-RI-AES**	AES user manual

Proportional flow valves

direct, pressure compensated, without transducer

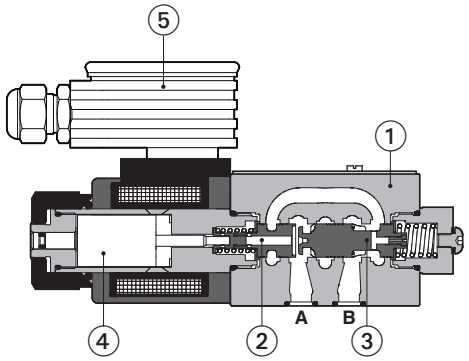

QVHZE-A

① Valve body
② Throttle
③ Compensator
④ Proportional solenoid
⑤ E-MI-AS-IR digital driver (to be ordered separately)

QVHZE-A, QVKZE-A

Proportional flow control valves, direct operated, pressure compensated, without position transducer, for load independent flow regulations.

They operate in association with off-board drivers, which supply the proportional valves with proper current to align the valve regulation to the reference signal supplied to the driver.

The solenoids are certified according to North American standard **cURus**.

QVHZE:	**QVKZE**:
Size: **06** - ISO 4401	Size: **10** - ISO 4401
Max flow: **45 l/min**	Max flow: **90 l/min**
Max pressure: **210 bar**	Max pressure: **210 bar**

1 MODEL CODE

QVKZE - **A** - **10** / **65** / * - * / * / * / *

QVKZE: Pressure compensated flow control valves, direct
QVHZE = size 06
QVKZE = size 10

A = for off-board driver, see section 3

Valve size ISO 4401: **06** = 06 **10** = 10

Max regulated flow:

QVHZE		QVKZE:
3 = 3,5 l/min	**36** = 35 l/min	**65** = 65 l/min
12 = 12 l/min	**45** = 45 l/min	**90** = 90 l/min
18 = 18 l/min		

Hydraulic options - see section 11 :
D = quick venting of port B

Hand lever options, only for **QVHZE** - see section 12 :
MO = horizontal hand lever
MV = vertical hand lever

Series number

Seals material, see section 8 :
- = NBR
PE = FKM
BT = NBR low temp.

Coil voltage, see section 13 :
- = standard coil for 24VDC Atos drivers
6 = optional coil for 12VDC Atos drivers
18 = optional coil for low current drivers

Coil with special connectors, see section 14 :
- = omit for standard DIN connector
J = AMP Junior Timer connector
K = Deutsch connector
S = Lead Wire connection

2 HYDRAULIC SYMBOLS

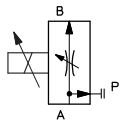

2 way connection

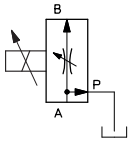

3 way connection

The valves can be used in 2 or 3 way connection, depending to the application requirements.

In **2 way** the P port must not be connected (blocked)
In **3 way** the P port has to be connected to tank or to other user lines
The port T must be always not connected (blocked)

For application examples of 2 and 3 way connections, see section 10

3 OFF-BOARD ELECTRONIC DRIVERS

Drivers model	E-MI-AC-01F		E-MI-AS-IR		E-BM-AS-PS		E-BM-AES
Type	Analog		Digital				
Voltage supply (VDC)	12	24	12	24	12	24	24
Valve coil option	/6	std	/6	std	/6	std	std
Format	plug-in to solenoid				DIN-rail panel		
Tech table	G010		G020		G030		GS050

4 GENERAL NOTES

Atos digital proportionals valves are CE marked according to the applicable directives (e.g. Immunity and Emission EMC Directive).
Installation, wirings and start-up procedures must be performed according to the general prescriptions shown in tech table **FS900** and in the user manuals included in the E-SW-* programming software.

5 GENERAL CHARACTERISTICS

Assembly position	Any position
Subplate surface finishing to ISO 4401	Acceptable roughness index: Ra ≤ 0,8, recommended Ra 0,4 – Flatness ratio 0,01/100
MTTFd valves according to EN ISO 13849	150 years, see technical table P007
Ambient temperature range	**Standard** = -20°C ÷ +70°C **/PE** option = -20°C ÷ +70°C **/BT** option = -40°C ÷ +60°C
Storage temperature range	**Standard** = -20°C ÷ +80°C **/PE** option = -20°C ÷ +80°C **/BT** option = -40°C ÷ +70°C
Surface protection	Body: zinc coating with black passivation Coil: zinc nickel coating
Corrosion resistance	Salt spray test (EN ISO 9227) > 200 h
Compliance	CE according to EMC directive 2014/30/EU (Immunity: EN 61000-6-2; Emission: EN 61000-6-3) RoHS Directive 2011/65/EU as last update by 2015/863/EU REACH Regulation (EC) n°1907/2006

6 HYDRAULIC CHARACTERISTICS - based on mineral oil ISO VG 46 at 50 °C

Valve model	QVHZE					QVKZE	
	3	**12**	**18**	**35**	**45**	**65**	**90**
Max regulated flow [l/min]	3,5	12	18	35	45	65	90
Min regulated flow [cm³/min]	15	20	30	50	60	85	100
Max flow on port A [l/min]	40			50	55	70	100
Max pressure [bar]	210						
Response time 0-100% step signal [ms]	≤ 30					≤ 45	
Hysteresis	≤ 5 [% of the regulated max flow]						
Linearity	≤ 3 [% of the regulated max flow]						
Repeatability	± 1 [% of the regulated max flow]						

Note: above performance data refer to valves coupled with Atos electronic drivers, see section 3

7 ELECTRICAL CHARACTERISTICS

Valve model	QVHZE			QVKZE		
Coil voltage code	standard	option /6	option /18	standard	option /6	option /18
Max. solenoid current	2,2 A	2,7 A	1,1 A	2,2 A	2,7 A	1,1 A
Coil resistance R at 20°C	3,1 Ω	2,1 Ω	13,1 Ω	3,2 Ω	2,1 Ω	13,7 Ω
Insulation class	H (180°) Due to the occuring surface temperatures of the solenoid coils, the European standards ISO 13732-1 and EN982 must be taken into account					
Protection degree to DIN EN60529	IP65 with mating connectors					
Duty factor	Continuous rating (ED=100%)					
Certification	**cURus** North American Standard					

8 SEALS AND HYDRAULIC FLUIDS - for other fluids not included in below table, consult our technical office

Seals, recommended fluid temperature	NBR seals (standard) = -20°C ÷ +80°C, with HFC hydraulic fluids = -20°C ÷ +50°C FKM seals (/PE option) = -20°C ÷ +80°C NBR low temp (/BT option) = -40°C ÷ +60°C, with HFC hydraulic fluids = -40°C ÷ +50°C		
Recommended viscosity	20 ÷ 100 mm²/s - max allowed range 15 ÷ 380 mm²/s		
Max fluid contamination level — normal operation	ISO4406 class 18/16/13 NAS1638 class 7		see also filter section at www.atos.com or KTF catalog
Max fluid contamination level — longer life	ISO4406 class 16/14/11 NAS1638 class 5		
Hydraulic fluid	**Suitable seals type**	**Classification**	**Ref. Standard**
Mineral oils	NBR, FKM, NBR low temp.	HL, HLP, HLPD, HVLP, HVLPD	DIN 51524
Flame resistant without water	FKM	HFDU, HFDR	ISO 12922
Flame resistant with water	NBR, NBR low temp.	HFC	

9 DIAGRAMS - based on mineral oil ISO VG 46 at 50 °C

9.1 Regulation diagrams

1 = QVHZE-*-06**/3** 2 way
2 = QVHZE-*-06**/3** 3 way

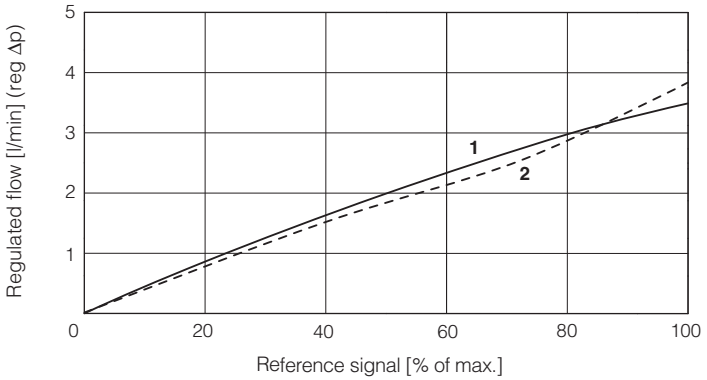

3 = QVHZE-*-06**/12** 2 way
4 = QVHZE-*-06**/12** 3 way

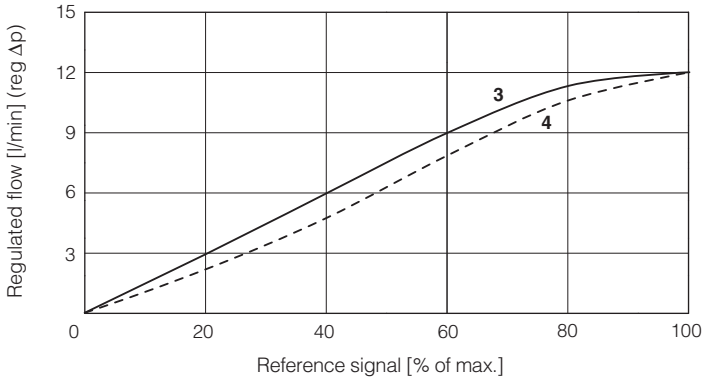

5 = QVHZE-*-06**/18** 2 way
6 = QVHZE-*-06**/18** 3 way

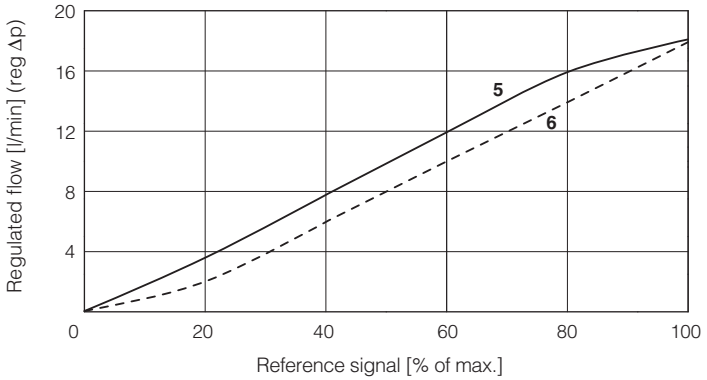

7 = QVHZE-*-06**/36** 2 way
8 = QVHZE-*-06**/36** 3 way

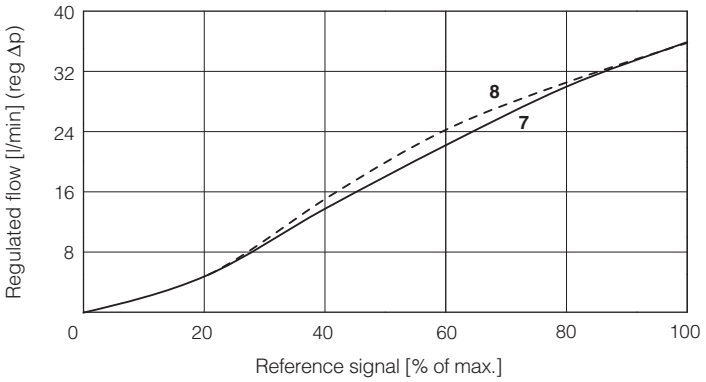

9 = QVHZE-*-06**/45** 2 way
10 = QVHZE-*-06**/45** 3 way

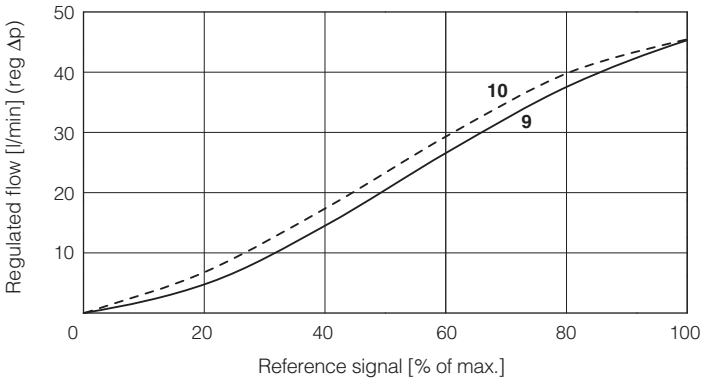

11 = QVKZE-*-10**/65** 2 way
12 = QVKZE-*-10**/65** 3 way

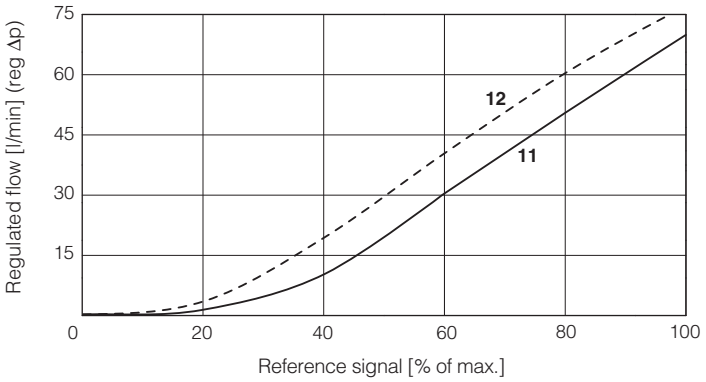

13 = QVKZE-*-10**/90** 2 way
14 = QVKZE-*-10**/90** 3 way

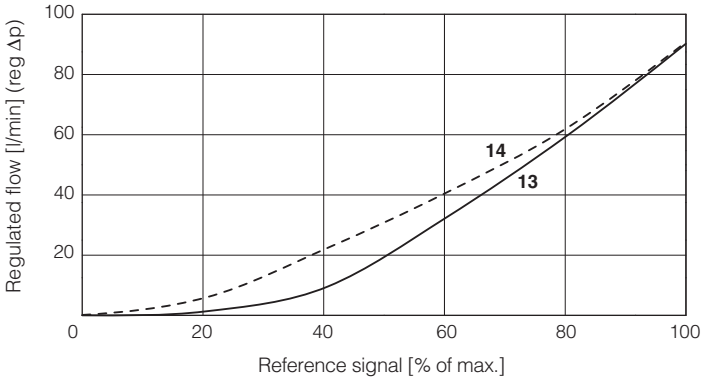

9.2 Regulated flow/outlet pressure diagrams

with inlet pressure = 210 bar

1 = QVHZE
2 = QVKZE

Dotted line for 3-way versions

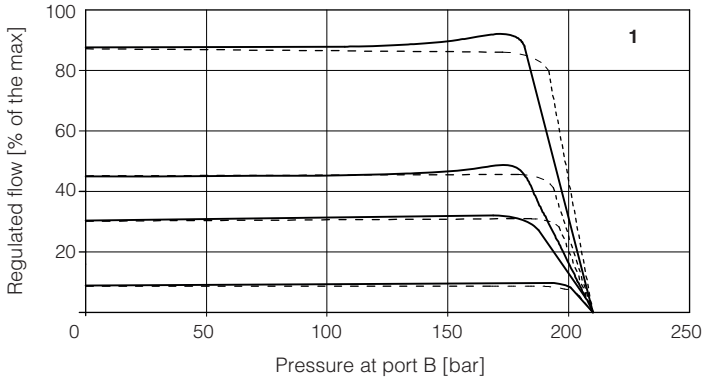

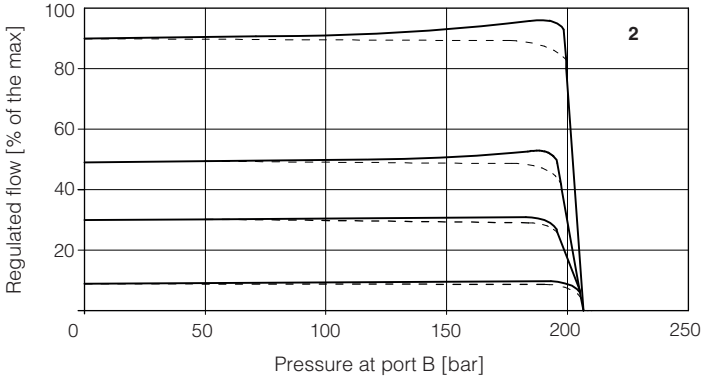

9.3 Flow A →P/Δp diagrams

3-way configuration

Values in above diagrams are measured without pressure on port B.
If port B is pressurized, the values in the diagrams must be increased by the same value

1 = QVHZE-A-06/**3**
QVHZE-A-06/**12**
QVHZE-A-06/**18**

2 = QVHZE-A-06/**36**
QVHZE-A-06/**45**

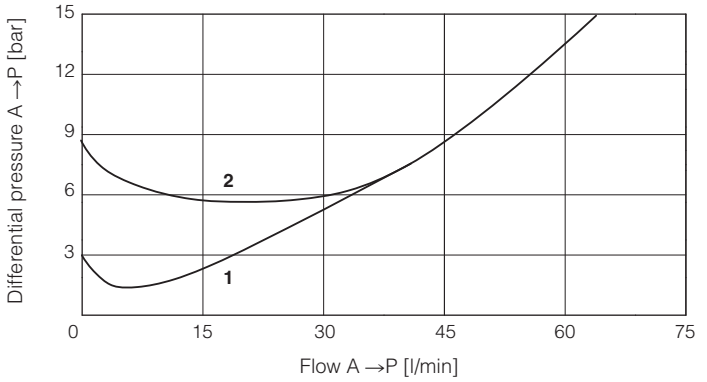

3 = QVKZE-A-10/**65**
4 = QVKZE-A-10/**90**

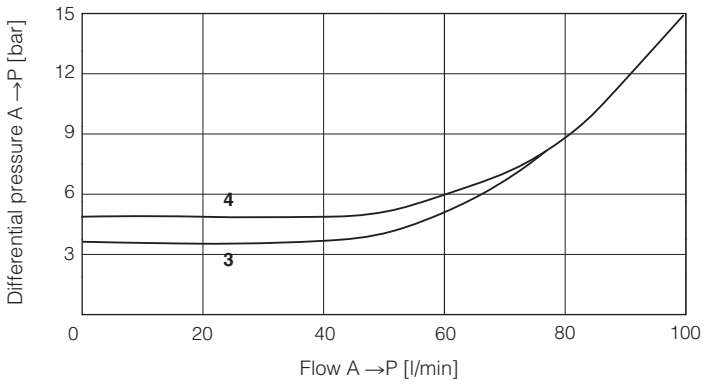

10 APPLICATIONS AND CONNECTIONS

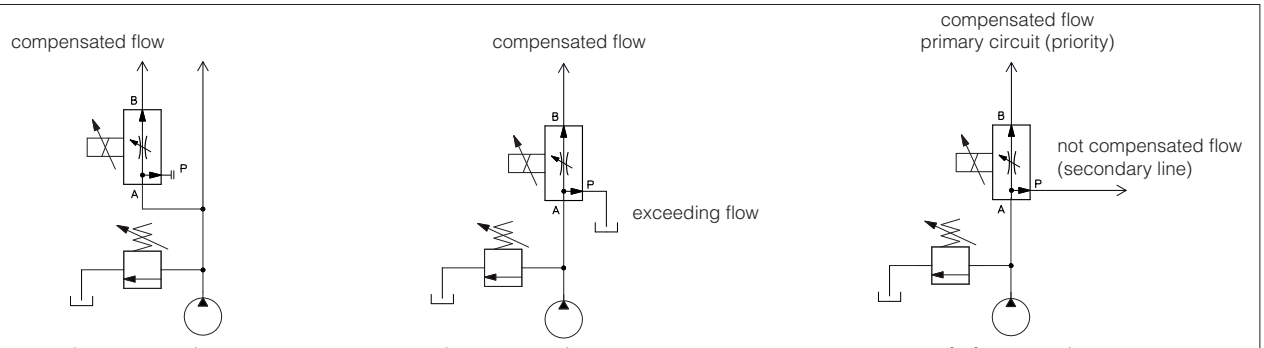

2 way connection **3 way** connection **priority** connection

2 way connection
The 2 way connection is normally used to control the flow in one part of the hydraulic circuit or to regulate the speed of a specific actuator.
The metered flow in the controlled line is kept constant, independently to the load variations.
If the valve is directly installed on the pump main line, the exceeding flow is returned to tank though the pressure relief valve.

3 way connection
The 3 way connection is normally used when the valve directly controls the pump flow (main line).
The metered flow in the controlled line is kept constant, independently to the load variations.
The exceeding flow (not metered by the valve) it is returned to tank trough the valve P port = T line (3rd way).

Priority connection
The priority connection guarantees the pressure compensated flow supply to the primary circuit (B port).
The exceeding flow (not required by the primary circuit) is bypassed through the valve P port, to secondary circuit operating at lower pressure and not requiring compensated flow regulations.

11 HYDRAULIC OPTIONS

D = This option provides a quick venting of the use port B when the valve is closed or de-energized.
The valve must be connected in 3 way, with P port connected to tank. When the proportional throttle is fully closed, the valve's port B is internally connected to port P (tank), permitting a quickly decompression of the pressure in the use line.

In the diagram aside are represented the venting times of **QVHZE** and **QVKZE** with option /D respect to standard versions:

1 = standard version **2** = option /D

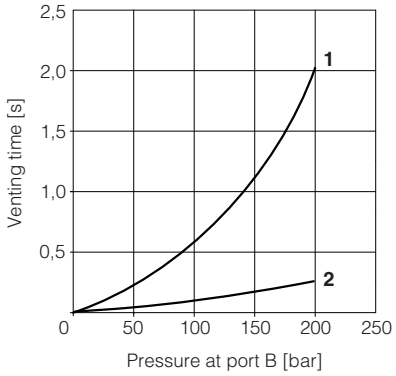

12 HAND LEVER OPTION - only for QVHZE

It allows to operate the valve in absence of electrical power supply.

MO = Horizontal hand lever **MV** = Vertical hand lever

13 COIL VOLTAGE OPTIONS

6 = Optional coil to be used with Atos drivers with power supply 12 VDC.

18 = Optional coil to be used with electronic drivers not supplied by Atos.

14 COILS WITH SPECIAL CONNECTORS

J option
Coil type COZEJ (QVHZE)
Coil type CAZEJ (QVKZE)
AMP Junior Timer connector
Protection degree IP67

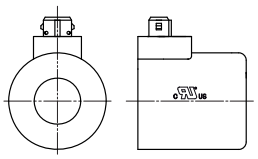

K option
Coil type COZEK (QVHZE)
Coil type CAZEK (QVKZE)
Deutsch connector, DT-04-2P male
Protection degree IP67

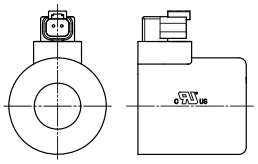

S option
Coil type COZES (QVHZE)
Coil type CAZES (QVKZE)
Lead Wire connection
Cable lenght = 180 mm

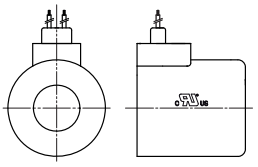

15 SOLENOID CONNECTION

PIN	SIGNAL	TECHNICAL SPECIFICATION	Connector code 666
1	**COIL**	Power supply	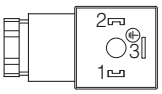
2	**COIL**	Power supply	
3	**GND**	Ground	

16 FASTENING BOLTS AND SEALS

	QVHZE	QVKZE
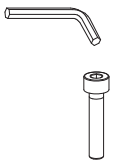	**Fastening bolts:** 4 socket head screws M5x30 class 12.9 Tightening torque = 8 Nm	**Fastening bolts:** 4 socket head screws M6x40 class 12.9 Tightening torque = 15 Nm
	Seals: 4 OR 108 Diameter of ports A, B, P, T: Ø 7,5 mm	**Seals:** 5 OR 2050 Diameter of ports A, B, P, T: Ø 11,2 mm

17 INSTALLATION DIMENSIONS FOR QVHZE [mm]

ISO 4401: 2005
Mounting surface: 4401-03-02-0-05 (see tab. P005)

Mass [kg]	
QVHZE	1,8
QVHZE + E-MI-AS-IR	2,3
Option /MV, /MO	+0,6

QVHZE-A

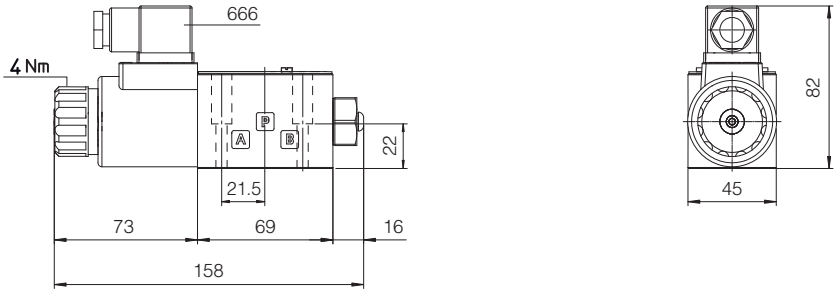

QVHZE-A with E-MI-AS-IR digital driver

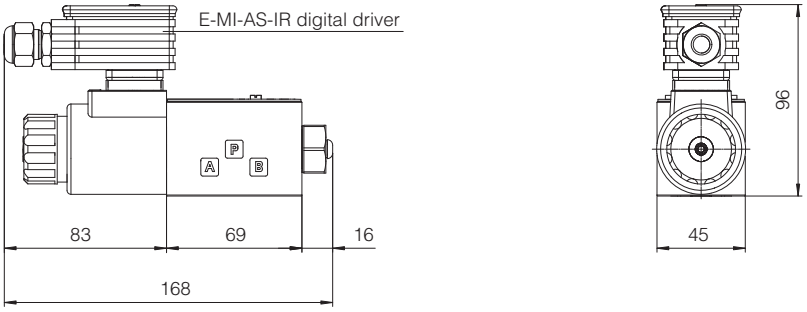

QVHZE-A /MV /MO

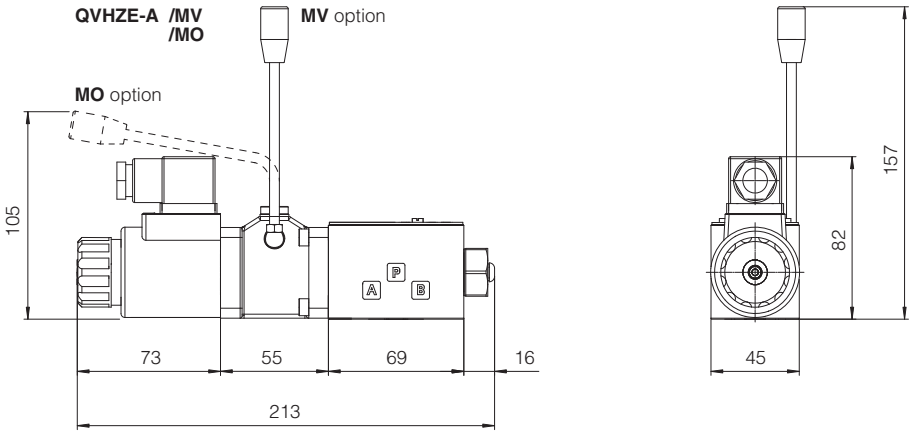

18 INSTALLATION DIMENSIONS FOR QVKZE [mm]

ISO 4401: 2005
Mounting surface: 4401-05-04-0-05 (see tab. P005)

Mass [kg]	
QVKZE	4,8
QVKZE + E-MI-AS-IR	5,3

QVKZE-A

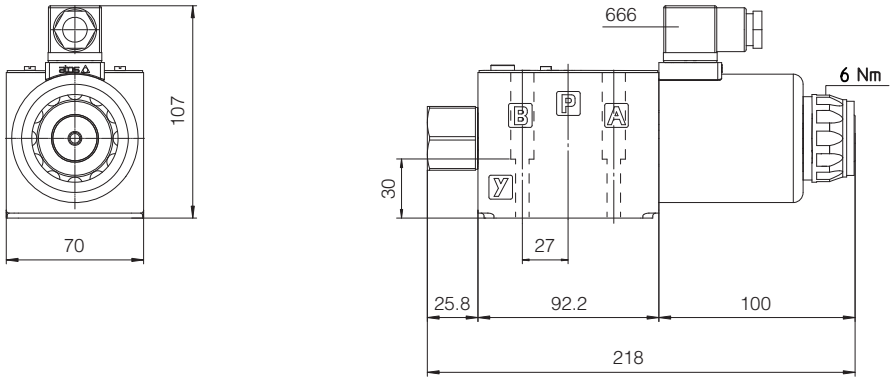

QVKZE-A with E-MI-AS-IR

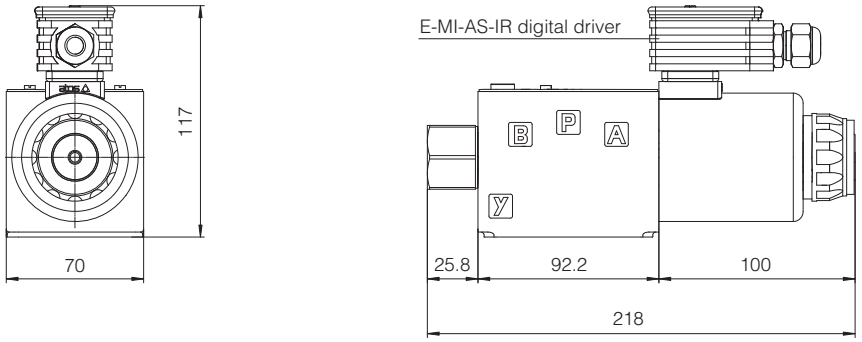

19 RELATED DOCUMENTATION

FS001	Basics for digital electrohydraulics	**GS050**	E-BM-AES digital driver
FS900	Operating and maintenance information for proportional valves	**GS500**	Programming tools
G010	E-MI-AC analog driver	**GS510**	Fieldbus
G020	E-MI-AS-IR digital driver	**K800**	Electric and electronic connectors
G030	E-BM-AS digital driver	**P005**	Mounting surfaces for electrohydraulic valves

Digital E-BM-TES/LES drivers

DIN-rail format, for proportional valves with one or two LVDT transducers

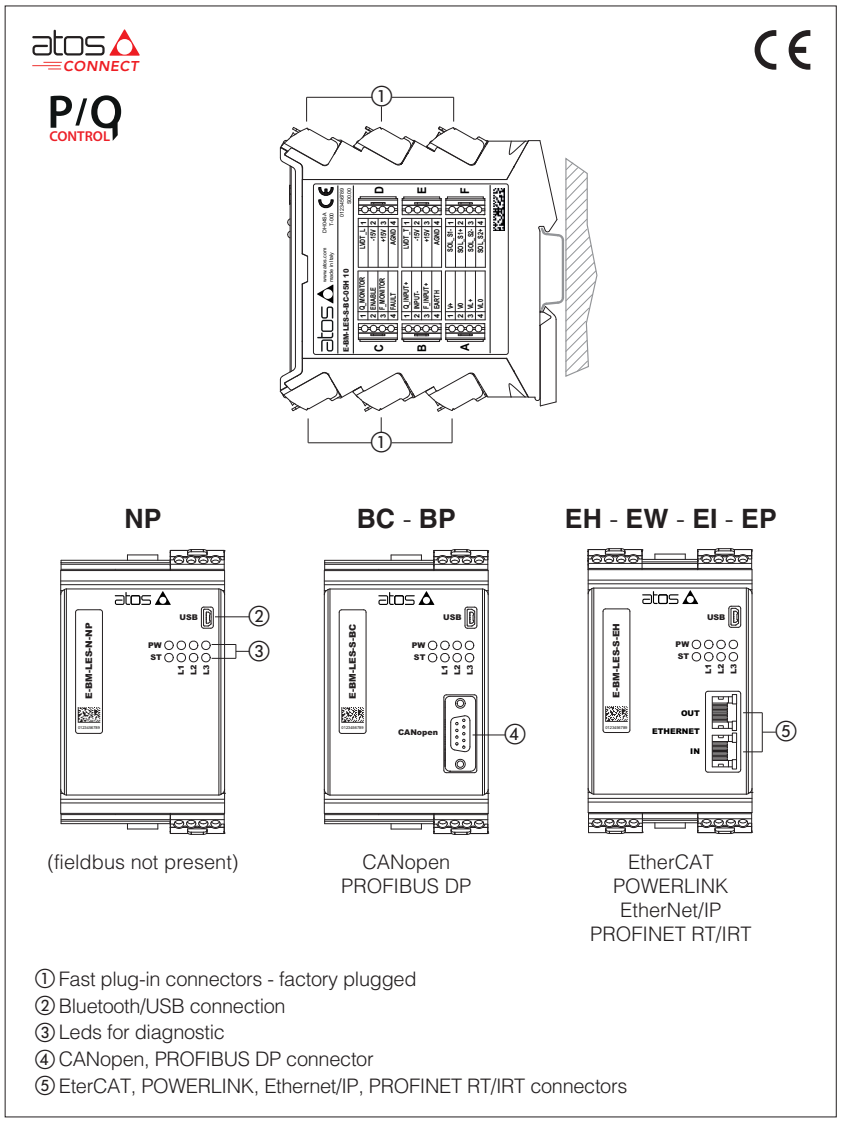

E-BM-TES/LES

Digital drivers control in closed loop the position of the spool or poppet of direct and pilot operated proportional valves, according to the electronic reference input signal.
TES execution controls direct operated directional/flow valves with one LVDT transducer.
LES execution controls pilot operated directional valves with two LVDT transducers.
Option S adds the closed loop control of pressure (SP) or force (SF and SL) to the basic functions of proportional directional valves flow regulation (see section 4).
Bluetooth/USB connection is always present for valve settings via mobile App and Atos PC software.

General Features:

- up to 9 fast plug-in connectors
- Mini USB connector for Bluetooth/USB connection - always present
- DB9 connector for CANopen and PROFIBUS DP
- RJ45 connectors input/output for EtherCAT, POWERLINK, EtherNet/IP, PROFINET
- 8 leds for diagnostics (see 9.1)
- Electrical protection against reverse polarity of power supply
- Ambient temperature range: -20 ÷ +50 °C
- Plastic box with IP20 protection degree and standard DIN-rail mounting
- CE mark according to EMC directive

Software Features:

- Intuitive graphic interface
- Setting of valve's functional parameters: bias, scale, ramps, dither
- Linearization function for hydraulic regulation
- Setting of PID gains
- Selection of analog IN / OUT range
- Complete diagnostic of driver status
- Internal oscilloscope function
- In field firmware update through USB

1 MODEL CODE

E-BM - **TES** - **N** - **NP** - **01H** ***** / ***** ***** / *****

Off-board electronic driver in DIN rail format

TES = digital full driver, for valves with one LVDT transducer
LES = digital full driver, for valves with two LVDT transducers

Alternated P/Q control:
N = none
S = closed loop pressure/force (see tech table **FS500**)

Fieldbus interface:
NP = Not Present
BC = CANopen
BP = PROFIBUS DP
EH = EtherCAT
EW = POWERLINK
EI = EtherNet/IP
EP = PROFINET RT/IRT

01H = for single solenoid proportional valves
05H = for double solenoid proportional valves (only for **TES**)

- = omit for direct valves and for pilot operated valves with two LVDT transducers
P = for pilot operated valves with one LVDT transducer (only for **TES-N**)

Options, see section 11 **:**
A = max current limitation for Ex-proof valves
C = current feedback 4 ÷ 20 mA for remote transducers (only for option **S**) and LVDT transducers (only for option **A**)
I = current reference input and monitor 4 ÷ 20 mA

Series number

Set code (see section 10)

2 BLOCK DIAGRAM EXAMPLE

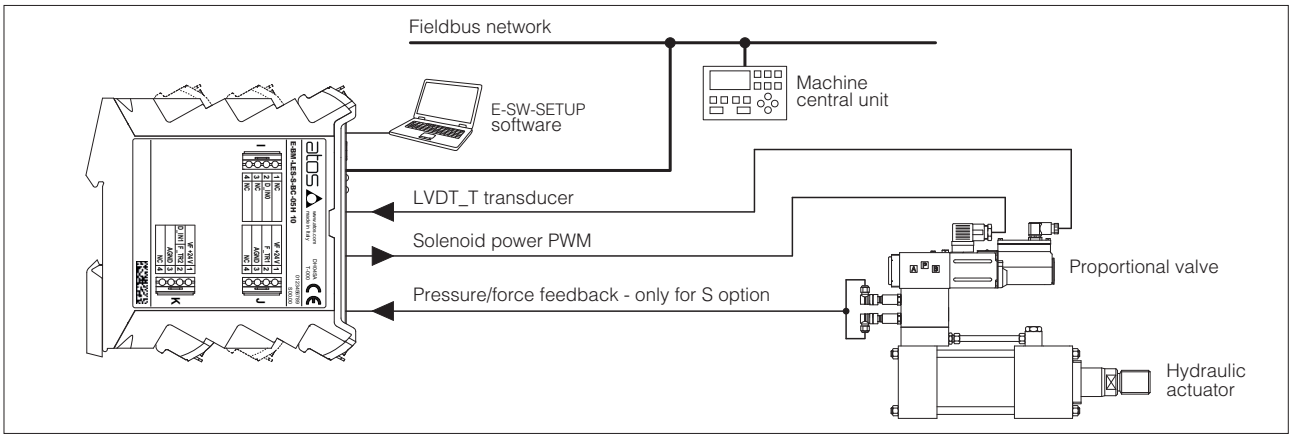

3 VALVES RANGE

Valves	Directional			Flow	Directional	Cartridge
Industrial Tech table	**DHZO-T, DKZOR-T** F165, F168	**DLHZO-T, DLKZOR-T** F180	**DPZO-T** F172	**QVHZO-T, QVKZOR-T** F412	**DPZO-L** F175, F178	**LIQZP-L** F330, F340
Ex-proof Tech table	**DHZA-T, DKZA-T** FX120	**DLHZA-T, DLKZA-T** FX140	**DPZA-T** FX220	**QVHZA-T, QVKZA-T** FX420	**DPZA-L** FX232, FX237	**LIQZA-L** FX350, FX370
Driver model	**E-BM-TES**				**E-BM-LES**	

Option S not available

4 ALTERNATED p/Q CONTROL - only for **S** option

S option on digital drivers adds the closed loop control of pressure (SP) or force (SF and SL) to the basic functions of proportional directional valves flow regulation.
The alternated p/Q control operates according to the two electronic reference signals by a dedicated algorithm that automatically selects which control will be active time by time.
The dynamics of the switching between the two controls can be regulated thanks to specific software setting, in order to avoid instability or vibrations.
Flow regulation is active when the actual system pressure/force is lower than the relevant input reference signal - the valve works normally to regulate the flow by controlling in closed-loop the spool/poppet position through the integral LVDT transducer.
Pressure/force control is activated when the actual system pressure/force, measured by remote transducers, grows up to the relevant input reference signal - the driver reduces the valve's flow regulation in order to keep steady the system pressure/force.
If the pressure/force tends to decrease under its input reference signal, the flow control returns active.
The dynamic response of pressure/force control can be adapted to different system's characteristics, by setting the internal PID parameters using Atos PC software.
Up to 4 different PIDs are selectable to optimize the system dynamic response according to different hydraulic working conditions.

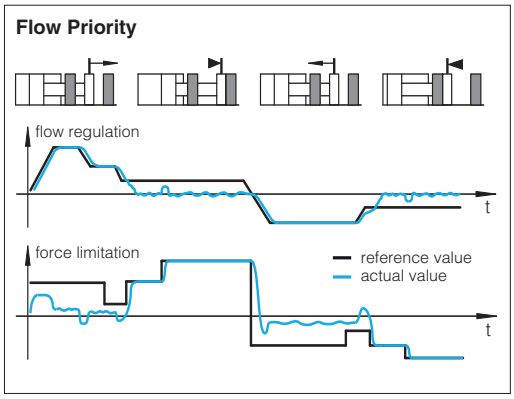

Alternated control configurations - software selectable

SP	SF	SL
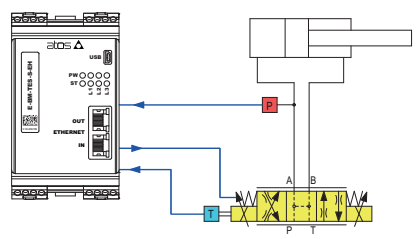	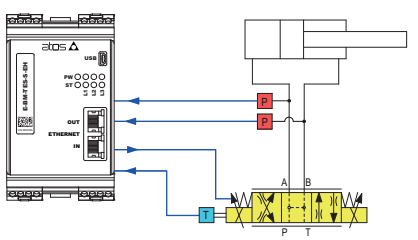	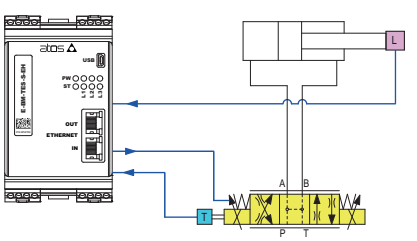
one remote pressure transducer has to be installed on the actuator's port to be controlled	two remote pressure transducers have to be installed on the actuator's ports; the actuator force is calculated by the pressure feedbacks (Pa - Pb)	one load cell transducer has to be installed between the actuator and the controlled load

T valve's spool transducer P pressure transducer L load cell

SP – flow/pressure control
Adds pressure control to standard flow control and permits to limit the max force in one direction controlling in closed loop the pressure acting on one side of the hydraulic actuator. A single pressure transducer has to be installed on hydraulic line to be controlled.
SF – flow/force control
Adds force control to standard flow control and permits to limit the max force in two directions controlling in closed loop the delta pressure acting on both sides of the hydraulic actuator. Two pressure transducers have to be installed on both hydraulic line.
SL – flow/force control
Adds force control to standard flow control and permits to limit the max force in one or two directions controlling in closed loop the force performed by the hydraulic actuator. A load cell has to be installed on hydraulic actuator.
General Notes:
- auxiliary check valves are recommended in case of specific hydraulic configuration requirements in absence of power supply or fault - see tech table **EY105**
- for additional information about alternated P/Q controls configuration please refer to tech table **FS500**
- Atos technical service is available for additional evaluations related to specific applications usage

5 GENERAL NOTES

Atos digital proportionals valves are CE marked according to the applicable directives (e.g. Immunity and Emission EMC Directive).
Installation, wirings and start-up procedures must be performed according to the general prescriptions shown in tech table **FS900** and in the user manuals included in the Z-SW-* programming software.

6 VALVE SETTINGS AND PROGRAMMING TOOLS - see tech. table **GS500**

6.1 Atos CONNECT mobile App

Free downloadable App for smartphones and tablets which allows quick access to valve main functional parameters and basic diagnostic information via Bluetooth, thus avoiding physical cable connection and significantly reducing commissioning time.
Atos CONNECT supports Atos digital valve drivers equipped with E-A-BTH adapter or with built-in Bluetooth. It does not support valves with p/Q control or axis controls.

Download on the App Store

GET IT ON Google Play

6.2 E-SW-SETUP PC software

Free downloadable software for PC allows to set all valve functional parameters and to access complete diagnostic information of digital drivers via Bluetooth/USB service port.
Atos E-SW-SETUP PC software supports all Atos digital valve drivers and it is available at www.atos.com in MyAtos area.

WARNING: drivers USB port is not isolated! For E-C-SB-USB/BM cable, the use of E-A-SB-USB/OPT isolator adapter is highly recommended for PC protection

Bluetooth or USB connection

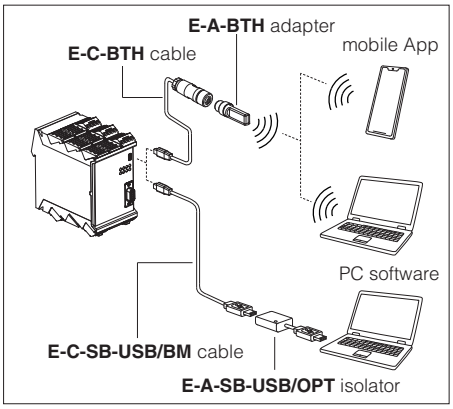

WARNING: for the list of countries where the Bluetooth adapter has been approved, see tech. table **GS500**

7 FIELDBUS - see tech. table **GS510**

Fieldbus allows valve direct communication with machine control unit for digital reference, valve diagnostics and settings. These execution allow to operate the valves through fieldbus or analog signals available on the main connector.

8 MAIN CHARACTERISTICS

Power supplies	Nominal : +24 VDC Rectified and filtered : VRMS = 20 ÷ 32 VMAX (ripple max 10 % VPP)			
Max power consumption	50 W			
Current supplied to solenoids	IMAX = 3.0 A for standard driver IMAX = 2.5 A for ex-proof driver (**/A option**)			
Analog input signals	Voltage: range ±10 VDC (24 VMAX tolerant) Input impedance: Ri > 50 kΩ Current: range ±20 mA Input impedance: Ri = 500 Ω			
Monitor outputs	Output range: voltage ±10 VDC @ max 5 mA current ±20 mA @ max 500 Ω load resistance			
Enable input Digital inputs	Range: 0 ÷ 5 VDC (OFF state), 9 ÷ 24 VDC (ON state), 5 ÷ 9 VDC (not accepted); Input impedance: Ri > 10 kΩ			
Fault output	Output range: 0 ÷ 24 VDC (ON state > [power supply - 2 V] ; OFF state < 1 V) @ max 50 mA; external negative voltage not allowed (e.g. due to inductive loads)			
Alarms	Solenoid not connected/short circuit, cable break with current reference signal, over/under temperature, valve spool transducer malfunctions, alarms history storage function			
Pressure/Force transducers power supply (only for S option)	+24VDC @ max 100 mA (E-ATR-8 see tech table **GS465**)			
Format	Plastic box ; IP20 protection degree ; L 35 - H 7,5 mm DIN-rail mounting as per EN60715			
Ambient temperature range	-20 ÷ +50 °C (storage -25 ÷ +85 °C)			
Mass	Approx. 400 g			
Additional characteristics	8 leds for diagnostic; protection against reverse polarity of power supply			
Compliance	CE according to EMC directive 2014/30/EU (Immunity: EN 61000-6-2; Emission: EN 61000-6-3) RoHS Directive 2011/65/EU as last update by 2015/863/EU REACH Regulation (EC) n°1907/2006			
Communication interface	USB Atos ASCII coding	CANopen EN50325-4 + DS408	PROFIBUS DP EN50170-2/IEC61158	EtherCAT, POWERLINK, EtherNet/IP, PROFINET IO RT / IRT EC 61158
Communication physical layer	not insulated USB 2.0 + USB OTG	optical insulated CAN ISO11898	optical insulated RS485	Fast Ethernet, insulated 100 Base TX
Recommended wiring cable	LiYCY shielded cables: 0,5 mm² max 50 m for logic - 1,5 mm² max 50 m for power supply Note: for transducers wiring cable please consult the transducers datasheet			
Max conductor size (see section 14)	2,5 mm²			

Note: a maximum time of 800 ms (depending on communication type) has to be considered between the driver energizing with the 24 VDC power supply and when the valve is ready to operate. During this time the current to the valve coils is switched to zero.

9 CONNECTIONS AND LEDS

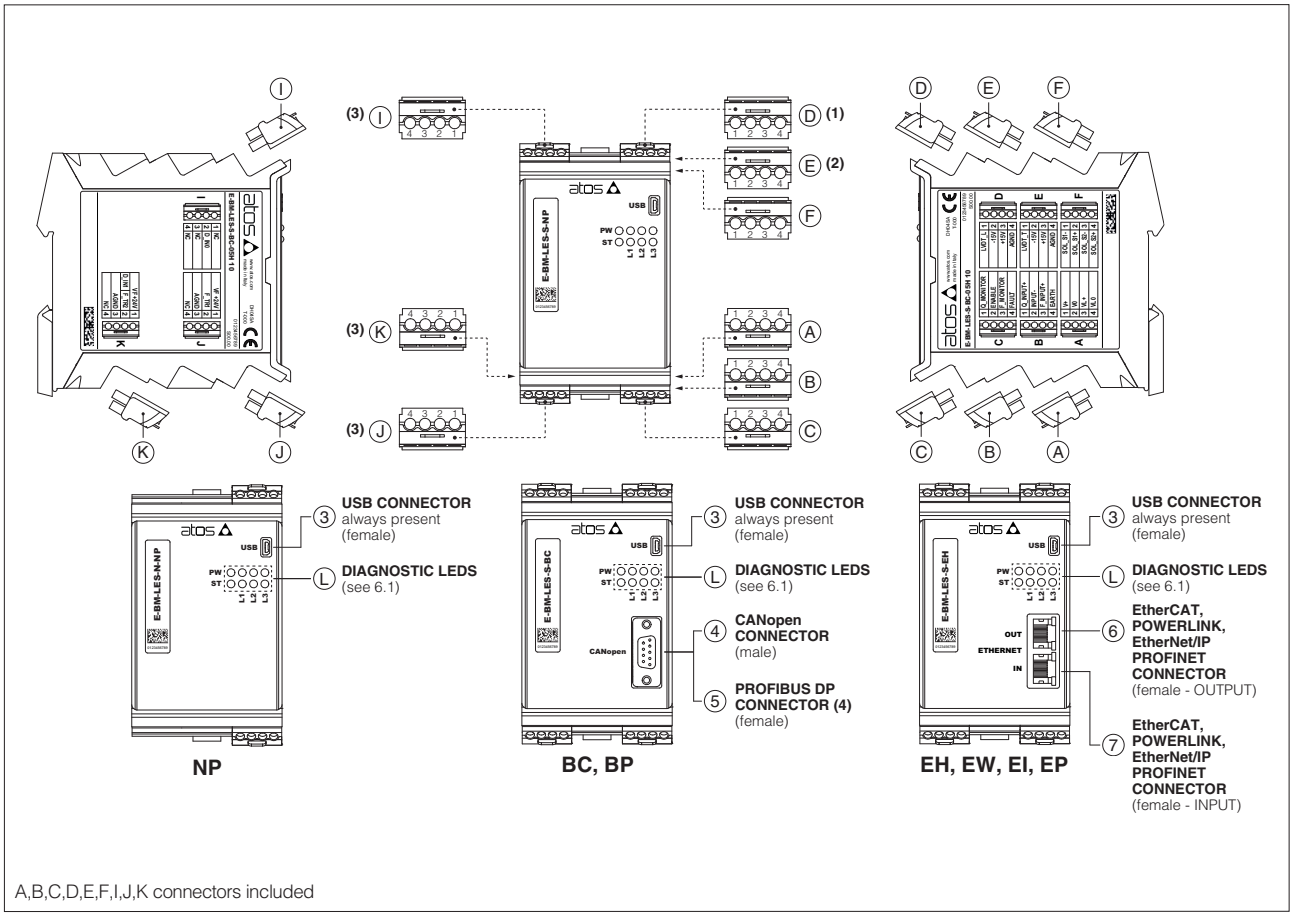

A,B,C,D,E,F,I,J,K connectors included

(1) D connector is available only for TES-N versions 01HP / 05HP and LES-*
(2) E connector is available only for TES-* versions 01H / 05H and LES-*
(3) I , J and K connectors are available only for TES-S and LES-S

(4) To interface with Siemens 6ES7972-0BA12-0XA connector, it is mandatory to use also one of the following adapters to avoid interference with the USB connector:
DG909MF1 - the connector will be oriented upwards
DG909MF3 - the connector will be oriented downwards

9.1 Diagnostic LEDs (L)

Eight leds show driver operative conditions for immediate basic diagnostics. Please refer to the driver user manual for detailed information.

FIELDBUS / LEDS	NP Not Present	BC CANopen	BP PROFIBUS DP	EH EtherCAT	EW POWERLINK	EI EtherNet/IP	EP PROFINET
L1	VALVE STATUS			LINK/ACT			
L2	NETWORK STATUS			NETWORK STATUS			
L3	SOLENOID STATUS			LINK/ACT			
PW	OFF = Power supply OFF		ON = Power supply ON				
ST	OFF = Fault present		ON = No fault				

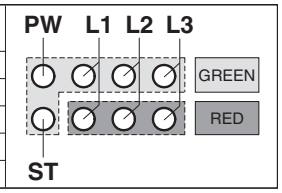

9.2 Connectors - 4 pin

CONNECTOR	PIN	ALTERNATED P/Q CONTROL **N** none	**S** pressure/force	TECHNICAL SPECIFICATIONS	NOTES
A	A1	**V+**		Power supply 24 VDC	Input - power supply
	A2	**V0**		Power supply 0 VDC	Gnd - power supply
	A3	**VL+**		Power supply 24 VDC for driver's logic and communication	Input - power supply
	A4	**VL0**		Power supply 0 VDC for driver's logic and communication	Gnd - power supply
B	B1	**Q_INPUT+**		Flow reference input signal: ±10 VDC / ±20 mA maximum range Default are ±10 VDC for standard and 4 ÷ 20 mA for /I option	Input - analog signal **Software selectable**
	B2	**INPUT-**		Negative reference input signal for Q_INPUT+ and F_INPUT+	Input - analog signal
	B3	**NC**		Do not connect	
			F_INPUT+	Pressure/Force reference input signal ±10 VDC / ±20 mA maximum range Default are ±10 VDC for standard and 4 ÷ 20 mA for /I option	Input - analog signal **Software selectable**
	B4	**EARTH**		Connect to system ground	
C	C1	**Q_MONITOR**		Flow monitor output signal: ±10 VDC / ±20 mA maximum range, referred to AGND. Default are ±10 VDC for standard and 4 ÷ 20 mA for /I option	Output - analog signal **Software selectable**
	C2	**ENABLE**		Enable (24 VDC) or disable (0 VDC) the controller, referred to VL0	Input - on/off signal
	C3	**NC**		Do not connect	
			F_MONITOR	Pressure/Force monitor output signal: ±10 VDC / ±20 mA maximum range, referred to AGND Default are ±10 VDC for standard and 4 ÷ 20 mA for /I option	Output - analog signal **Software selectable**
	C4	**FAULT**		Fault (0 VDC) or normal working (24 VDC), referred to VL0	Output - on/off signal
D (1)	D1	**LVDT_L**		Main stage valve position transducer signal	Input - analog signal
	D2	**-15V**		Main stage valve position transducer power supply -15V	Output power supply
	D3	**+15V**		Main stage valve position transducer power supply +15V	Output power supply
	D4	**AGND**		Common gnd for transducer power and monitor outputs	Common gnd
E (2)	E1	**LVDT_T**		Direct valve or pilot valve position transducer signal	Input - analog signal
	E2	**-15V**		Direct valve or pilot valve position transducer power supply -15V	Output power supply
	E3	**+15V**		Direct valve or pilot valve position transducer power supply +15V	Output power supply
	E4	**AGND**		Common gnd for transducer power and monitor outputs	Common gnd
F	F1	**SOL_S1-**		Negative current to solenoid S1	Output - power PWM
	F2	**SOL_S1+**		Positive current to solenoid S1	Output - power PWM
	F3	**SOL_S2-**		Negative current to solenoid S2	Output - power PWM
	F4	**SOL_S2+**		Positive current to solenoid S2	Output - power PWM
I	I1		**NC**	Do not connect	
	I2		**D_IN0**	NP execution: multiple pressure/force PID selection, referred to VL0 Fieldbus execution: general purpose digital input 0 ÷ 24VDC, referred to VL0	Input - on/off signal
	I3		**NC**	Do not connect	
	I4		**NC**	Do not connect	
J	J1		**VF +24V**	Power supply: +24VDC or OFF (default OFF)	Output - power supply **Software selectable**
	J2		**F_TR1**	1st signal pressure/force transducer: ±10 VDC / ±20 mA maximum range	Input - analog signal **Software selectable**
	J3		**AGND**	Common gnd for transducer power and signals	Common gnd
	J4		**NC**	Do not connect	
K	K1		**VF +24V**	Power supply: +24VDC or OFF (default OFF)	Output - power supply **Software selectable**
	K2		**F_TR2** (3)	2nd signal pressure transducer: ±10 VDC / ±20 mA maximum range	Input - analog signal **Software selectable**
			D_IN1 (4)	NP execution: multiple pressure/force PID selection, referred to VL0 Fieldbus execution: general purpose digital input 0 ÷ 24VDC, referred to VL0	Input - on/off signal
	K3		**AGND**	Common gnd for transducer power and signals	Common gnd
	K4		**NC**	Do not connect	

(1) D connector is available only for TES-N versions 01HP / 05HP and LES-*
(2) E connector is available only for TES-* versions 01H / 05H and LES-*
(3) Only for SF control
(4) Only for SP or SL control

9.3 Pressure/force transducers connection - example - only for **S** option

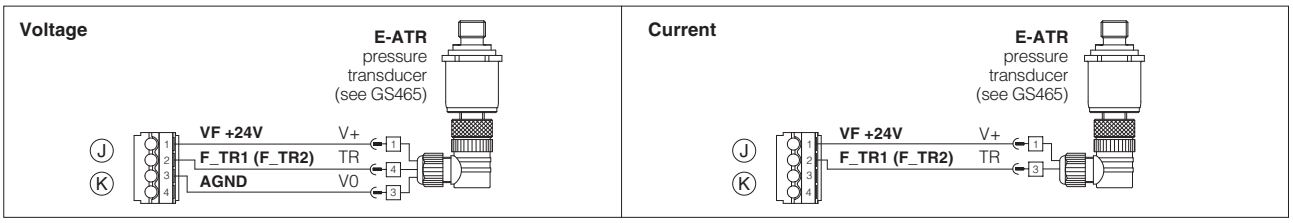

9.4 Communication connectors ③ - ④ - ⑤ - ⑥ - ⑦

③ **USB connector - Mini USB type B** always present		
PIN	**SIGNAL**	**TECHNICAL SPECIFICATION** (1)
1	**+5V_USB**	Power supply
2	**D-**	Data line -
3	**D+**	Data line +
4	**ID**	Identification
5	**GND_USB**	Signal zero data line

④ **BC fieldbus execution, connector - DB9 - 9 pin**		
PIN	**SIGNAL**	**TECHNICAL SPECIFICATION** (1)
2	**CAN_L**	Bus line (low)
3	**CAN_GND**	Signal zero data line
5	**CAN_SHLD**	Shield
7	**CAN_H**	Bus line (high)

⑤ **BP fieldbus execution, connector - DB9 - 9 pin**		
PIN	**SIGNAL**	**TECHNICAL SPECIFICATION** (1)
1	**SHIELD**	
3	**LINE-B**	Bus line (low)
5	**DGND**	Data line and termination signal zero
6	**+5V**	Termination supply signal
8	**LINE-A**	Bus line (high)

⑥ ⑦ **EH, EW, EI, EP fieldbus execution, connector - RJ45 - 8 pin**		
PIN	**SIGNAL**	**TECHNICAL SPECIFICATION** (1)
1	**TX+**	Transmitter - white/orange
2	**RX+**	Receiver - white/green
3	**TX-**	Transmitter - orange
6	**RX-**	Receiver - green

(1) shield connection on connector's housing is recommended

10 SET CODE

The basic calibration of electronic driver is factory preset, according to the proportional valve to be coupled. These pre-calibrations are identified by the set code at the end of driver's model code (see section 1). For correct set code selection, please include in the driver order also the complete code of the coupled proportional valve. For further information about set code, please contact Atos technical office.

11 POWER SUPPLY AND SIGNALS SPECIFICATIONS

Generic electrical output signals of the valve (e.g. fault or monitor signals) must not be directly used to activate safety functions, like to switch-ON/OFF the machine's safety components, as prescribed by the European standards (Safety requirements of fluid technology systems and components-hydraulics, ISO 4413).

11.1 Power supply (V+ and V0)

The power supply (pin A1 and A2) must be appropriately stabilized or rectified and filtered: apply at least a 10000 μF/40 V capacitance to single phase rectifiers or a 4700 μF/40 V capacitance to three phase rectifiers.

⚠ A safety fuse is required in series to each power supply: 2,5 A time lag fuse.

11.2 Power supply for driver's logic and communication (VL+ and VL0)

The power supply (pin A3 and A4) for driver's logic and communication must be appropriately stabilized or rectified and filtered: apply at least a 10000 μF/40 V capacitance to single phase rectifiers or a 4700 μF/40 V capacitance to three phase rectifiers.
The separate power supply for driver's logic, allow to remove solenoid power supply from pin A1 and A2 maintaining active the diagnostics, USB and fieldbus communications.

⚠ A safety fuse is required in series to each driver's logic and communication power supply: 500 mA fast fuse.

11.3 Flow reference input signals (Q_INPUT+)

The driver is designed to receive an analog reference input signal (pin B1) for the valve's spool position.
Reference input signal is factory preset according to selected valve code, defaults are ±10 VDC for standard and 4 ÷ 20 mA for /I option.
Input signal can be reconfigured via software selecting between voltage and current, within a maximum range of ±10 VDC or ± 20 mA.
Drivers with fieldbus interface can be software set to receive reference signal directly by the machine control unit (fieldbus reference).
Analog reference input signal can be used as on-off commands with input range 0 ÷ 24 VDC.

11.4 Pressure or force reference input signal (F_INPUT+) - only for **S** option

Functionality of pressure or force input reference signal (pin B3), is used as reference for the driver pressure/force closed loop, see section 4 .
Reference input signal is factory preset according to selected valve code, defaults are ±10 VDC for standard and 4 ÷ 20 mA for /I option.
Input signal can be reconfigured via software selecting between voltage and current, within a maximum range of ±10 VDC or ± 20 mA.
Drivers with fieldbus interface can be software set to receive reference signal directly by the machine control unit (fieldbus reference).
Analog reference input signal can be used as on-off commands with input range 0 ÷ 24 VDC.

11.5 Flow monitor output signal (Q_MONITOR)

The driver generates an analog output signal (pin C1) proportional to the actual spool position; the monitor output signal can be software set to show other signals available in the driver (e.g. analog reference, fieldbus reference, valve spool position).
Monitor output signal is factory preset according to selected valve code, defaults are ±10 VDC for standard and 4 ÷ 20 mA for /I option.
Output signal can be reconfigured via software selecting between voltage and current, within a maximum range of ±10 VDC or ± 20 mA.

11.6 Pressure or force monitor output signal (F_MONITOR) - only for **S** option

The driver generates an analog output signal (C3) proportional to alternated pressure/force control; the monitor output signal can be software set to show other signals available in the driver (e.g. analog reference, force reference).
Monitor output signal is factory preset according to selected valve code, defaults are ±10 VDC for standard and 4 ÷ 20 mA for /I option.
Output signal can be reconfigured via software selecting between voltage and current, within a maximum range of ±10 VDC or ± 20 mA

11.7 Enable input signal (ENABLE)

To enable the driver, supply 24 VDC on pin C2: Enable input signal allows to enable/disable the current supply to the solenoid, without removing the electrical power supply to the driver; it is used to active the communication and the other driver functions when the valve must be disabled for safety reasons. This condition **does not comply** with norms IEC 61508 and ISO 13849.
Enable input signal can be used as digital input by software selection.

11.8 Fault output signal (FAULT)

Fault output signal (pin C4) indicates fault conditions of the driver (solenoid short circuits/not connected, reference or transducer signal cable broken, maximum error exceeded, etc.). Fault presence corresponds to 0 VDC, normal working corresponds to 24 VDC.
Fault status is not affected by the status of the Enable input signal.
Fault output signal can be used as digital output by software selection.

11.9 Main stage and direct or pilot position transducer input signals (LVDT_L and LVDT_T)

Main stage (LVDT_L pin D1) and direct or pilot (LVDT_T pin E1) position transducer integrated to the valve have to be directly connected to the driver using ±15 VDC supply output available at pin D2, D3 and pin E2, E3.
Note: transducer input signals working range is ±10 VDC for standard or 4 ÷ 20 mA for /AC option and **cannot** be reconfigured via software (input signals setting depends to the driver set code).

11.10 Remote pressure/force transducer input signals (F_TR1 and F_TR2) - only for **S** option

Analog remote pressure transducers or load cell can be directly connected to the driver.
Analog input signal is factory preset according to selected driver code, defaults are ±10 VDC for standard and 4 ÷ 20 mA for /C option.
Input signal can be reconfigured via software selecting between voltage and current, within a maximum range of ±10 VDC or ± 20 mA.
Refer to pressure/force transducer characteristics to select the transducer type according to specific application requirements (see tech table **FS500**).
Note: F_TR2 (pin K2) analog input signal is available only SF control.

11.11 Multiple PID selection or digital input signals (D_IN0 and D_IN1) - only for **S** option

Two on-off input signals are available on the connectors I and K.
For NP executions pin I2 and/or pin K2 are used to select one of the four pressure (force) PID parameters setting, stored into the driver. Switching the active setting of pressure PID during the machine cycle allows to optimize the system dynamic response in different hydraulic working conditions (volume, flow, etc.). Supply a 24 VDC or a 0 VDC on pin I2 and/or pin K2, to select one of the PID settings as indicated by binary code table at side. Gray code can be selected by software.
For fieldbus executions pin I2 and/or K2 can be used as generic purpose on-off input signals.
Note: D_IN1 (pin K2) on-off input signal is available only for SP or SL control.

	PID SET SELECTION			
PIN	**SET 1**	**SET 2**	**SET 3**	**SET 4**
I2	0	24 VDC	0	24 VDC
K2	0	0	24 VDC	24 VDC

11.12 Possible combined options: /AC, **/AI**, **/ACI**, **/CI** - combined options **/CI** is available only for E-BM-TES/LES-S.

12 MAIN SOFTWARE PARAMETER SETTINGS

For detailed descriptions of settings, wirings and installation procedures, please refer to the user manual included in the E-SW-SETUP programming software:

E-MAN-BM-LES - user manual for **E-BM-TES-N** and **E-BM-LES-N** digital drivers
E-MAN-BM-LES-S - user manual for **E-BM-TES-S** and **E-BM-LES-S** digital drivers

13 OVERALL DIMENSIONS [mm]

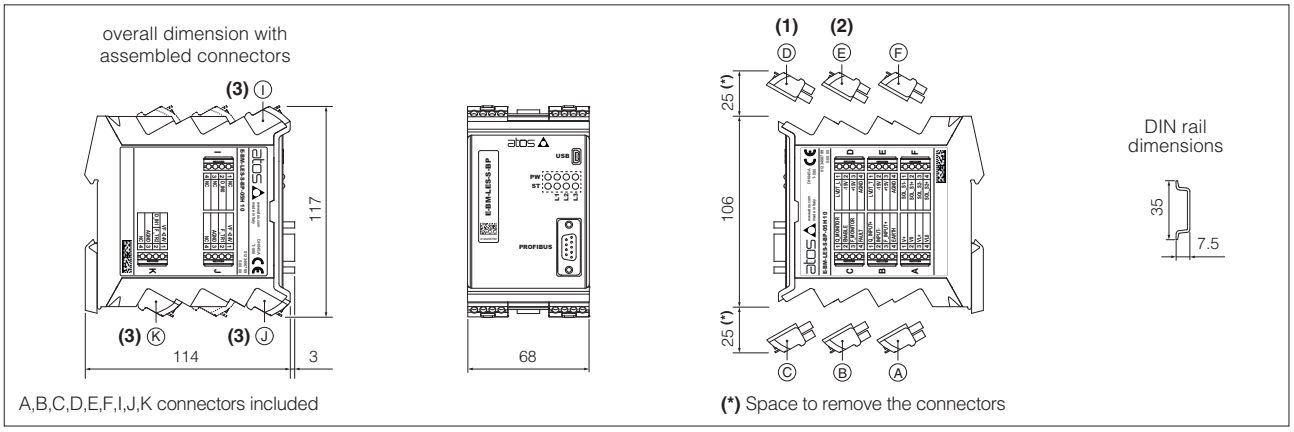

(1) D connector is available only for TES-N versions 01HP / 05HP and LES-*
(2) E connector is available only for TES-* versions 01H / 05H and LES-*
(3) I , J and K connectors are available only for TES-S and LES-S

14 INSTALLATION

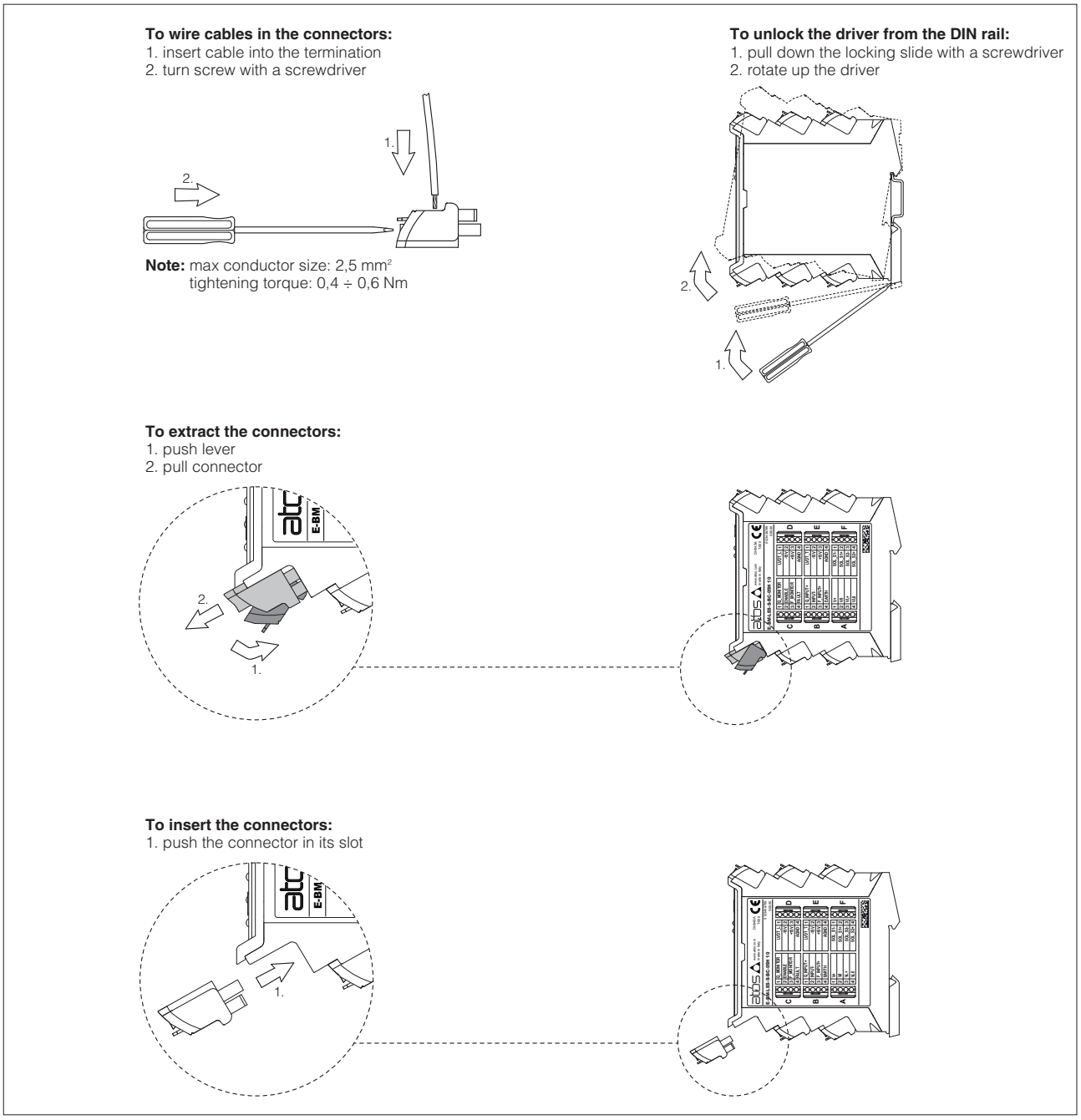

Note: all connectors are supplied with a mechanical coding. This feature ensures a unique insertion of each connector in the own slot.
(e.g. connector A can not be inserted into connector slot of B,C,D,E,F,I,J,K)

Digital E-BM-TEB/LEB drivers

DIN-rail format, for proportional valves with one or two LVDT transducers

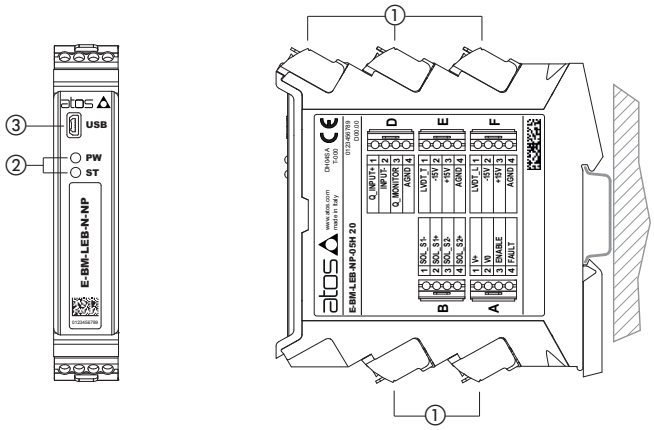

① Fast plug-in connectors - factory plugged
② Bluetooth/USB connection
③ Leds for diagnostic

E-BM-TEB/LEB

Digital drivers control in closed loop the position of the spool or poppet of direct and pilot operated proportional valves, according to the electronic reference input signal.

TEB execution controls direct operated directional/flow valves with one LVDT transducer.

LEB execution controls pilot operated directional valves with two LVDT transducers.

Bluetooth/USB connection is always present for valve settings via mobile App and Atos PC software.

General Features:

- 5 fast plug-in connectors
- Mini USB connector for Bluetooth/USB connection - always present
- 2 leds for diagnostics (see 8.1)
- Electrical protection against reverse polarity of power supply
- Ambient temperature range: -20 ÷ +60 °C
- Plastic box with IP20 protection degree and standard DIN-rail mounting
- CE mark according to EMC directive

Software Features:

- Intuitive graphic interface
- Setting of valve's functional parameters: bias, scale, ramps, dither
- Linearization function for hydraulic regulation
- Setting of PID gains
- Selection of analog IN / OUT range
- Complete diagnostic of driver status
- Internal oscilloscope function
- In field firmware update through USB

1 MODEL CODE

E-BM - **TEB** - **N** - **NP** - **01H** ***** / ***** ***** / *****

Off-board electronic driver in DIN rail format

TEB = digital basic driver, for valves with one LVDT transducer
LEB = digital basic driver, for valves with two LVDT transducers

Alternated P/Q control:
N = none

Fieldbus interface:
NP = Not Present

01H = for single solenoid proportional valves
05H = for double solenoid proportional valves (only for **TEB**)

- = omit for direct valves and for pilot operated valves with two LVDT transducers
P = for pilot operated valves with one LVDT transducer (only for **TEB**)

Options, see section 10 **:**
A = max current limitation for Ex-proof valves
C = current feedback 4 ÷ 20 mA for LVDT transducers only in combination with option **A**
I = current reference input and monitor 4 ÷ 20 mA

Series number

Set code (see section 9)

2 BLOCK DIAGRAM EXAMPLE

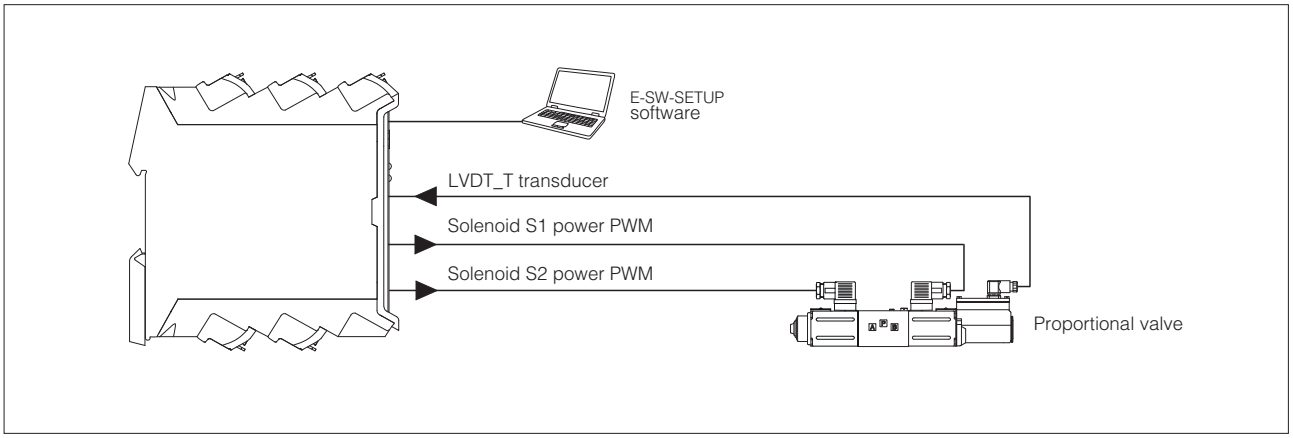

3 VALVES RANGE

Valves	Directional			Flow	Directional	Cartridge
Industrial Tech table	**DHZO-T, DKZOR-T** F165, F168	**DLHZO-T, DLKZOR-T** F180	**DPZO-T** F172	**QVHZO-T, QVKZOR-T** F412	**DPZO-L** F175, F178	**LIQZP-L** F330, F340
Ex-proof Tech table	**DHZA-T, DKZA-T** FX120	**DLHZA-T, DLKZA-T** FX140	**DPZA-T** FX220	**QVHZA-T, QVKZA-T** FX420	**DPZA-L** FX232, FX237	**LIQZA-L** FX350, FX370
Driver model	**E-BM-TEB**				**E-BM-LEB**	

4 GENERAL NOTES

Atos digital proportionals valves are CE marked according to the applicable directives (e.g. Immunity and Emission EMC Directive).
Installation, wirings and start-up procedures must be performed according to the general prescriptions shown in tech table **FS900** and in the user manuals included in the Z-SW-* programming software.

5 VALVE SETTINGS AND PROGRAMMING TOOLS - see tech. table **GS500**

5.1 Atos CONNECT mobile App

Free downloadable App for smartphones and tablets which allows quick access to valve main functional parameters and basic diagnostic information via Bluetooth, thus avoiding physical cable connection and significantly reducing commissioning time.
Atos CONNECT supports Atos digital valve drivers equipped with E-A-BTH adapter or with built-in Bluetooth. It does not support valves with p/Q control or axis controls.

Download on the App Store

GET IT ON Google Play

5.2 E-SW-SETUP PC software

Free downloadable software for PC allows to set all valve functional parameters and to access complete diagnostic information of digital drivers via Bluetooth/USB service port.
Atos E-SW-SETUP PC software supports all Atos digital valve drivers and it is available at www.atos.com in MyAtos area.

WARNING: drivers USB port is not isolated! For E-C-SB-USB/BM cable, the use of E-A-SB-USB/OPT isolator adapter is highly recommended for PC protection

WARNING: for the list of countries where the Bluetooth adapter has been approved, see tech. table **GS500**

Bluetooth or USB connection

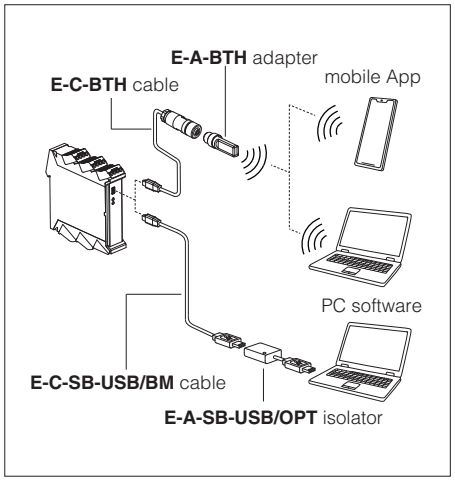

6 FIELDBUS - see tech. table **GS510**

Fieldbus allows valve direct communication with machine control unit for digital reference, valve diagnostics and settings. These execution allow to operate the valves through fieldbus or analog signals available on the main connector.

7 MAIN CHARACTERISTICS

Power supply (see 7.1)	Nominal : +24 V_{DC} Rectified and filtered : V_{RMS} = 20 ÷ 32 V_{MAX} (ripple max 10 % V_{PP})
Max power consumption	50 W
Current supplied to solenoids	I_{MAX} = 3.0 A for standard driver I_{MAX} = 2.5 A for ex-proof driver (**/A option**)
Analog input signal (see 7.2)	Voltage: range ±10 V_{DC} (24 V_{MAX} tolerant) Input impedance: Ri > 50 kΩ Current: range ±20 mA Input impedance: Ri = 500 Ω
Monitor output (see 7.3)	Output range: voltage ±10 V_{DC} @ max 5 mA current ±20 mA @ max 500 Ω load resistance
Enable input (see 7.4)	Range: 0 ÷ 5 V_{DC} (OFF state), 9 ÷ 24 V_{DC} (ON state), 5 ÷ 9 V_{DC} (not accepted); Input impedance: Ri > 10 kΩ
Fault output (see 7.5)	Output range: 0 ÷ 24 V_{DC} (ON state > [power supply - 2 V] ; OFF state < 1 V) @ max 50 mA; external negative voltage not allowed (e.g. due to inductive loads)
Alarms	Solenoid not connected/short circuit, cable break with current reference signal, over/under temperature, valve spool transducer malfunctions, alarms history storage function
Format	Plastic box ; IP20 protection degree ; L 35 - H 7,5 mm DIN-rail mounting as per EN60715
Operating temperature	-20 ÷ +60 °C (storage -25 ÷ +85 °C)
Mass	Approx. 300 g
Additional characteristics	2 leds for diagnostic; protection against reverse polarity of power supply
Compliance	CE according to EMC directive 2014/30/EU (Immunity: EN 61000-6-2; Emission: EN 61000-6-3) RoHS Directive 2011/65/EU as last update by 2015/863/EU REACH Regulation (EC) n°1907/2006
Communication interface	USB Atos ASCII coding
Communication physical layer	USB 2.0 + USB OTG not insulated
Recommended wiring cable	LiYCY shielded cables: 0,5 mm^2 max 50 m for logic - 1,5 mm^2 max 50 m for power supply Note: for transducers wiring cable please consult the transducers datasheet
Max conductor size (see 11)	2,5 mm^2

Note: a maximum time of 400 ms have be considered between the driver energizing with the 24 V_{DC} power supply and when the valve is ready to operate. During this time the current to the valve coils is switched to zero.

8 CONNECTIONS AND LEDS

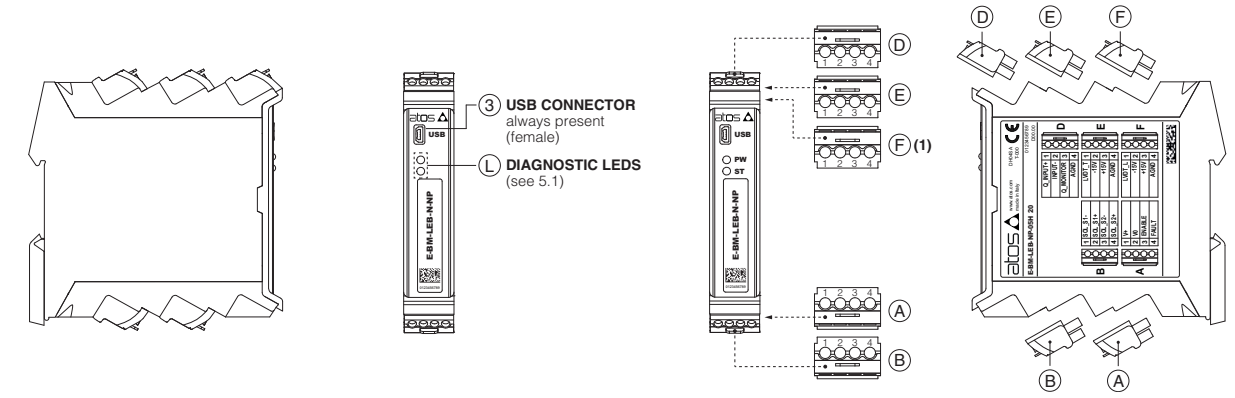

A,B,D,E,F connectors included

(1) F connector is available only for LEB

8.1 Diagnostic LEDs (L)

Two leds show driver operative conditions for immediate basic diagnostics. Please refer to the driver user manual for detailed information.

LEDS	DESCRIPTION		
PW	OFF = Power supply OFF	ON = Power supply ON	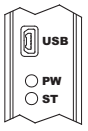
ST	OFF = Fault present	ON = No fault	

8.2 Connectors - 4 pin

CONNECTOR	PIN	SIGNALS	TECHNICAL SPECIFICATIONS	NOTES
A	A1	**V+**	Power supply 24 VDC	Input - power supply
	A2	**V0**	Power supply 0 VDC	Gnd - power supply
	A3	**ENABLE**	Enable (24 VDC) or disable (0 VDC) the controller, referred to V0	Input - on/off signal
	A4	**FAULT**	Fault (0 VDC) or normal working (24 VDC), referred to V0	Output - on/off signal
B	B1	**SOL_S1-**	Negative current to solenoid S1	Output - power PWM
	B2	**SOL_S1+**	Positive current to solenoid S1	Output - power PWM
	B3	**SOL_S2-**	Negative current to solenoid S2	Output - power PWM
	B4	**SOL_S2+**	Positive current to solenoid S2	Output - power PWM
D	D1	**Q_INPUT+**	Flow reference input signal: ±10 VDC / ±20 mA maximum range Default are ±10 VDC for standard and 4 ÷ 20 mA for /I option	Input - analog signal **Software selectable**
	D2	**INPUT-**	Negative reference input signal for Q_INPUT+	Input - analog signal
	D3	**Q_MONITOR**	Flow monitor output signal: ±10 VDC / ±20 mA maximum range, referred to AGND Default are ±10 VDC for standard and 4 ÷ 20 mA for /I option	Output - analog signal **Software selectable**
	D4	**AGND**	Common gnd for monitor output	Common gnd
E	E1	**LVDT_T**	Direct valve or pilot valve position transducer signal	Input - analog signal
	E2	**-15V**	Direct valve or pilot valve stage position transducer power supply -15V	Output power supply
	E3	**+15V**	Direct valve or pilot valve tage position transducer power supply +15V	Output power supply
	E4	**AGND**	Common gnd for transducer power	Common gnd
F (1)	F1	**LVDT_L**	Main stage valve position transducer signal	Input - analog signal
	F2	**-15V**	Main stage valve position transducer power supply -15V	Output power supply
	F3	**+15V**	Main stage valve position transducer power supply +15V	Output power supply
	F4	**AGND**	Common gnd for transducer power	Common gnd

(1) F connector is available only for LEB

8.3 Communication connector ③

③ **USB connector - Mini USB type B** always present		
PIN	**SIGNAL**	**TECHNICAL SPECIFICATION** (1)
1	**+5V_USB**	Power supply
2	**D-**	Data line -
3	**D+**	Data line +
4	**ID**	Identification
5	**GND_USB**	Signal zero data line

9 SET CODE

The basic calibration of electronic driver is factory preset, according to the proportional valve to be coupled. These pre-calibrations are identified by the set code at the end of driver's model code (see section 1). For correct set code selection, please include in the driver order also the complete code of the coupled proportional valve. For further information about set code, please contact Atos technical office.

10 POWER SUPPLY AND SIGNALS SPECIFICATIONS

Generic electrical output signals of the valve (e.g. fault or monitor signals) must not be directly used to activate safety functions, like to switch-ON/OFF the machine's safety components, as prescribed by the European standards (Safety requirements of fluid technology systems and components-hydraulics, ISO 4413).

10.1 Power supply (V+ and V0)

The power supply (pin A1 and A2) must be appropriately stabilized or rectified and filtered: apply at least a 10000 μF/40 V capacitance to single phase rectifiers or a 4700 μF/40 V capacitance to three phase rectifiers.

⚠ A safety fuse is required in series to each power supply: 2,5 A time lag fuse.

10.2 Flow reference input signal (Q_INPUT+)

The driver is designed to receive an analog reference input signal (pin D1) for the valve's spool position.
Reference input signal is factory preset according to selected valve code, defaults are ±10 VDC for standard and 4 ÷ 20 mA for /I option.
Input signal can be reconfigured via software selecting between voltage and current, within a maximum range of ±10 VDC or ± 20 mA.

10.3 Flow monitor output signal (Q_MONITOR)

The driver generates an analog output signal (pin D3) proportional to the actual spool position; the monitor output signal can be software set to show other signals available in the driver (e.g. analog reference, valve spool position).
Monitor output signal is factory preset according to selected valve code, defaults are ±10 VDC for standard and 4 ÷ 20 mA for /I option.
Output signal can be reconfigured via software selecting between voltage and current, within a maximum range of ±10 VDC or ± 20 mA.

10.4 Enable input signal (ENABLE)

To enable the driver, supply 24 VDC on pin A3: Enable input signal allows to enable/disable the current supply to the solenoid, without removing the electrical power supply to the driver; it is used to active the communication and the other driver functions when the valve must be disabled for safety reasons. This condition **does not comply** with norms IEC 61508 and ISO 13849.

10.5 Fault output signal (FAULT)

Fault output signal (pin A4) indicates fault conditions of the driver (solenoid short circuits/not connected, reference or transducer signal cable broken, maximum error exceeded, etc.). Fault presence corresponds to 0 VDC, normal working corresponds to 24 VDC.
Fault status is not affected by the status of the Enable input signal.

10.6 Main stage and direct or pilot position transducer input signals (LVDT_L and LVDT_T)

Main stage (LVDT_L pin F1) and direct or pilot (LVDT_T pin E1) position transducer integrated to the valve have to be directly connected to the driver using ±15 VDC supply output available at pin F2, F3 and pin E2, E3.
Note: transducer input signals working range is ±10 VDC for standard or 4 ÷ 20 mA for /C option and **cannot** be reconfigured via software (input signals setting depends to the driver set code).

10.7 Possible combined options: /AC, /AI, /ACI

11 MAIN SOFTWARE PARAMETER SETTINGS

For detailed descriptions of settings, wirings and installation procedures, please refer to the user manual included in the E-SW-SETUP programming software:

E-MAN-BM-LEB - user manual for **E-BM-TEB** and **E-BM-LEB** digital drivers

12 OVERALL DIMENSIONS [mm]

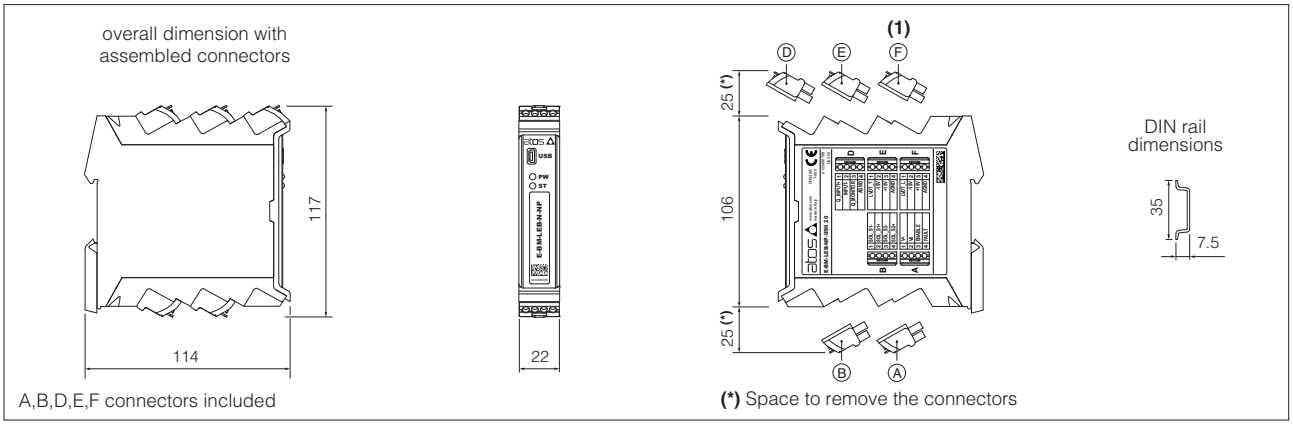

(1) F connector is available only for LEB

13 INSTALLATION

To wire cables in the connectors:
1. insert cable into the termination
2. turn screw with a screwdriver

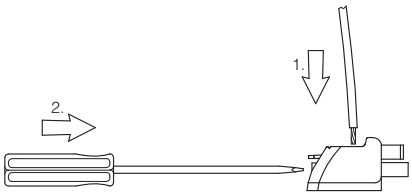

Note: max conductor size: 2,5 mm²
tightening torque: 0,4 ÷ 0,6 Nm

To unlock the driver from the DIN rail:
1. pull down the locking slide with a screwdriver
2. rotate up the driver

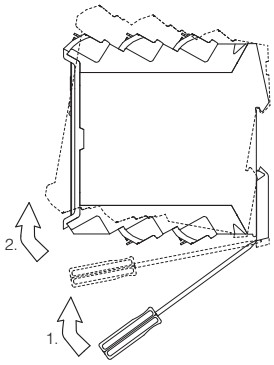

To extract the connectors:
1. push lever
2. pull connector

To insert the connectors:
1. push the connector in its slot

Note: all connectors are supplied with a mechanical coding. This feature ensures a unique insertion of each connector in the own slot.
(e.g. connector A can not be inserted into connector slot of B,D,E,F)

Digital electronic E-BM-RES drivers

DIN-rail format, for proportional valves with integral pressure transducer

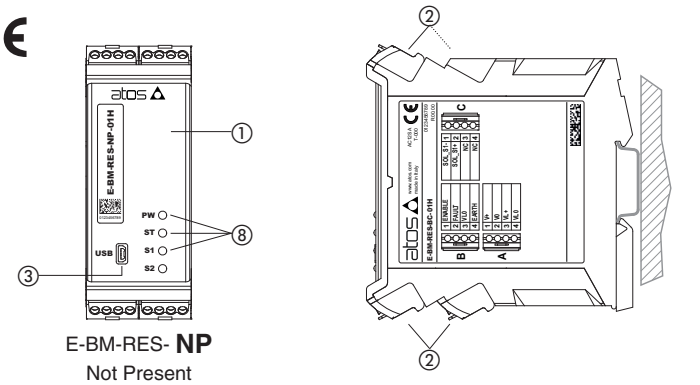

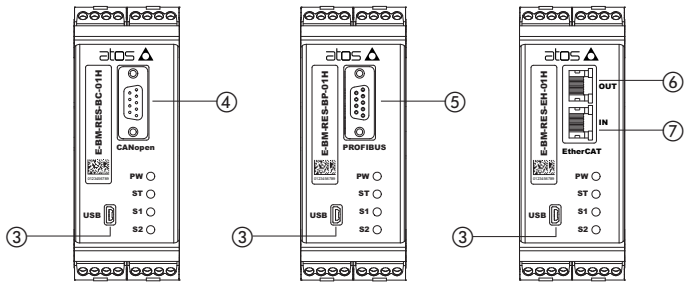

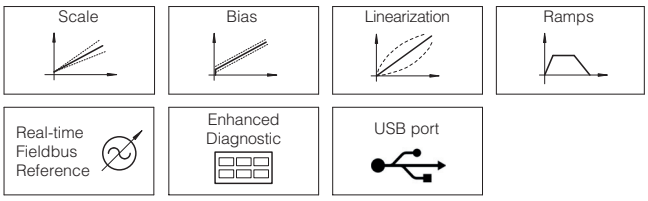

Connectors ② included

E-BM-RES

Digital drivers ① control, in closed loop, the regulated pressure of direct and pilot operated proportional valves according to the electronic reference input signal.
E-BM-RES operate direct and pilot operated relief/reducing control valves with integral pressure transducer.
Atos PC software allows to customize the driver configuration to the specific application requirements.

Electrical Features:

- 7 fast plug-in connectors ②
- Mini USB port ③ always present
- DB9 CANopen ④ and PROFIBUS DP ⑤ communication connector
- RJ45 EtherCAT communication connectors ⑥ output and ⑦ input
- 3 leds for diagnostics ⑧ (see 4.1)
- Pressure transducer input signal 4 ÷ 20 mA
- ±5 VDC output supply for external reference potentiometer
- Electrical protection against reverse polarity of power supply
- Operating temperature range: -20 ÷ +60 °C
- Plastic box with IP20 protection degree and standard DIN-rail mounting
- CE mark according to EMC directive

Software Features:

- Intuitive graphic interface
- Setting of valve's functional parameters: bias, scale, ramps, dither, PID gains
- 4 factory pre-set dynamic response setting to match different hydraulic conditions (see 8.1)
- Linearization function for hydraulic regulation
- Complete diagnostics of driver status
- Internal oscilloscope function
- In field firmware update through USB port

Fieldbus Features:

- Valve direct communication with machine control unit for digital reference, diagnostics and settings
- Fieldbus execution allow to operate the valves via fieldbus or via analog signals available on the connectors (see 4.2)

1 MODEL CODE

E-BM	-	RES	-	NP	-	01H	/	*		*	/	*

Off-board electronic driver in DIN rail format

RES = digital full driver, for valves with pressure transducer

Fieldbus interface - USB port always present:
NP = Not Present
BC = CANopen
BP = PROFIBUS DP
EH = EtherCAT

01H = for single solenoid proportional valves

Options:
A= max current limitation for Ex-proof valves
I = current reference input and monitor 4 ÷ 20 mA (omit for voltage reference and monitor input 0 ÷10 VDC)

Series number

Set code (see section 5)

2 VALVES RANGE

Valves	Relief			Reducing			Compensator
Industrial Tech table	**RZMO** FS010, FS067	**AGMZO** FS040	**LIMZO** FS305	**RZGO** FS020, FS075	**AGRCZO** FS055	**LIRZO** FS305	**LICZO** FS305
Ex-proof Tech table	**RZMA** FX035	**AGMZA** FX035	**LIMZA** FX325	**RZGA** FX065	**AGRCZA** FX065	**LIRZA** FX325	**LICZA** FX325

3 MAIN CHARACTERISTICS

Power supply (see 6.1, 6.4)	Nominal : +24 VDC Rectified and filtered : VRMS = 20 ÷ 32 VMAX (ripple max 10 % VPP)			
Max power consumption	50 W			
Current supplied to solenoids	IMAX = 2.7 A with +24 VDC power supply to drive standard proportional valves (3,2 Ω solenoid) IMAX = 2.5 A with +24 VDC power supply to drive ex-proof proportional valves (3,2 Ω solenoid) for **/A option**			
Analog input signals (see 6.2)	Voltage: maximum range ±10 VDC Input impedance: Ri > 50 kΩ Current: maximum range ±20 mA Input impedance: Ri = 500 Ω			
Monitor output (see 6.3)	Voltage: maximum range 0 ÷ 10 VDC @ max 5 mA Current: maximum range 0 ÷ 20 mA @ max 500 Ω load resistance			
Enable input (see 6.5)	Range : 0 ÷ 9 VDC (OFF state), 15 ÷ 24 VDC (ON state), 9 ÷ 15 VDC (not accepted); Input impedance: Ri > 87 kΩ			
Output supply (see 6.8)	±5 VDC @ max 10 mA : output supply for external potentiometer			
Fault output (see 6.6)	Output range : 0 ÷ 24 VDC (ON state ≅ VL+ [logic power supply] ; OFF state ≅ 0 V) @ max 50 mA; external negative voltage not allowed (e.g. due to inductive loads)			
Pressure transducer power supply	+24VDC @ max 100 mA (E-ATR-8 see tech table **GS465**; E-ATRA-7 for ex-proof, see tech table **GX800**)			
Alarms	Solenoid not connected/short circuit, cable break with current reference signal, over/under temperature, power supplies level, pressure transducer failure, alarms history storage function			
Format	Plastic box ; IP20 protection degree ; L 35 - H 7,5 mm DIN-rail mounting as per EN60715			
Operating temperature	-20 ÷ +60 °C (storage -25 ÷ +85 °C)			
Mass	Approx. 330 g			
Additional characteristics	Short circuit protection of solenoid current supply; current control by P.I.D. with rapid solenoid switching; protection against reverse polarity of power supply			
Compliance	CE according to EMC directive 2014/30/EU (Immunity: EN 61000-6-2; Emission: EN 61000-6-3) RoHS Directive 2011/65/EU as last update by 2015/863/EU REACH Regulation (EC) n°1907/2006			
Communication interface	USB Atos ASCII coding	CANopen EN50325-4 + DS408	PROFIBUS DP EN50170-2/IEC61158	EtherCAT IEC61158
Communication physical layer	not insulated USB 2.0 + USB OTG	optical insulated CAN ISO11898	optical insulated RS485	Fast Ethernet 100 Base TX
Recommended wiring cable	LiYCY shielded cables: 0,5 mm² max 50 m for logic - 1,5 mm² max 50 m for power supply and solenoids			
Max conductor size (see 10)	2,5 mm²			

Note: a maximum time of 500 ms (depending on communication type) have be considered between the driver energizing with the 24 VDC power supply and when the valve is ready to operate. During this time the current to the valve coils is switched to zero.

4 CONNECTIONS AND LEDS

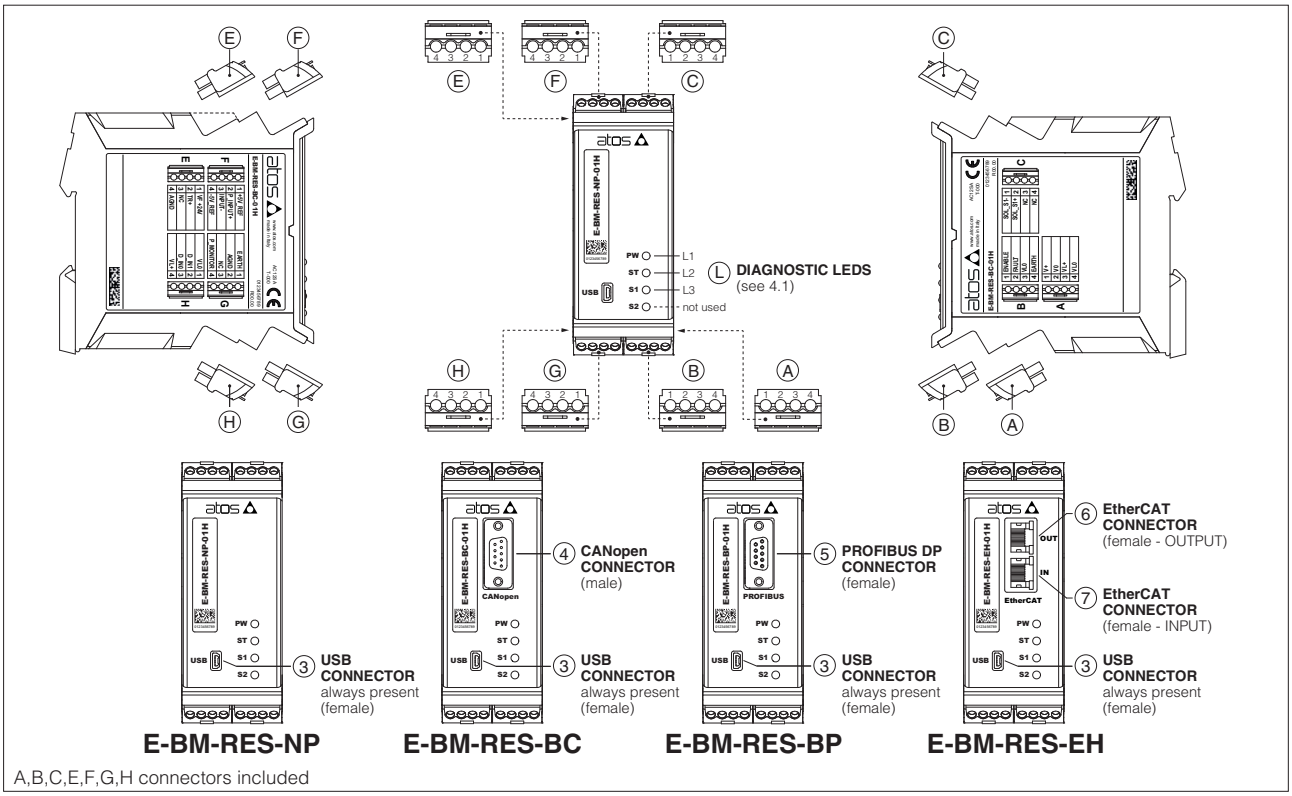

4.1 Diagnostic LEDs (L)

Three leds show driver operative conditions for immediate basic diagnostics. Please refer to the driver user manual for detailed information.

LED	COLOR	FUNCTION	FLASH RATE	DESCRIPTION
L1	GREEN	PW	OFF	Power supply OFF
			ON	Power supply ON
L2	GREEN	ST	OFF	Fault present
			ON	No fault
L3	YELLOW	S1	OFF	PWM command OFF
			ON	PWM command ON

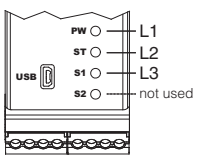

4.2 Connectors - 4 pin

CONNECTOR	PIN	SIGNAL	TECHNICAL SPECIFICATIONS	NOTES
A	A1	**V+**	Power supply 24 VDC (see 6.1)	Input - power supply
	A2	**V0**	Power supply 0 VDC (see 6.1)	Gnd - power supply
	A3	**VL+**	Power supply 24 VDC for driver's logic and communication (see 6.4)	Input - power supply
	A4	**VL0**	Power supply 0 VDC for driver's logic and communication (see 6.4)	Gnd - power supply
B	B1	**ENABLE**	Enable (24 VDC) or disable (0 VDC) the driver, referred to VL0 (see 6.5)	Input - on/off signal
	B2	**FAULT**	Fault (0 VDC) or normal working (24 VDC), referred to VL0 (see 6.6)	Output - on/off signal
	B3	**VL0**	Ground for ENABLE and FAULT	Gnd - digital signals
	B4	**EARTH**	Connect to system ground	
C	C1	**SOL_S1-**	Negative current to solenoid S1	Output - power PWM
	C2	**SOL_S1+**	Positive current to solenoid S1	Output - power PWM
	C3	**NC**	Do not connect	
	C4	**NC**	Do not connect	
E	E1	**VF +24V**	Power supply +24 VDC	Output - power supply
	E2	**TR+**	Positive pressure transducer input signal: ±20 mA maximum range (see 6.7) Default is 4 ÷ 20 mA	Input - analog signal **Software selectable**
	E3	**NC**	Do not connect	
	E4	**AGND**	Common gnd for signals and external potentiometer	
F	F1	**+5V_REF**	External potentiometer power supply +5 VDC @ 10mA (see 6.8)	Output - power supply
	F2	**P_INPUT+**	Positive pressure reference input signal: ±10 VDC / ±20 mA maximum range (see 6.2) Defaults are 0 ÷ 10 VDC for standard and 4 ÷ 20 mA for /I option	Input - analog signal **Software selectable**
	F3	**INPUT-**	Negative pressure reference input signal for P_INPUT+	Input - analog signal
	F4	**-5V_REF**	External potentiometer power supply -5 VDC @ 10mA (see 6.8)	Output - power supply
G	G1	**EARTH**	Connect to system ground	
	G2	**AGND**	Analog ground for monitor and external potentiometer	Gnd - analog signal
	G3	**NC**	Do not connect	
	G4	**P_MONITOR**	Pressure monitor output signal: 0 ÷ 10 VDC / 0 ÷ 20 mA maximum range (see 6.3) Default are 0 ÷ 10 VDC for standard and 4 ÷ 20 mA for /I option	Output - analog signal **Software selectable**
H	H1	**VL0**	Power supply 0 VDC for digital input (see 6.4)	Gnd - power supply
	H2	**D_IN1**	Pressure PID selection, referred to VL0 (see 6.9)	Input - on/off signal
	H3	**D_IN0**	Pressure PID selection, referred to VL0 (see 6.9)	Input - on/off signal
	H4	**VL+**	Power supply 24 VDC for digital input (see 6.4)	Output - power supply

Pressure transducer connections

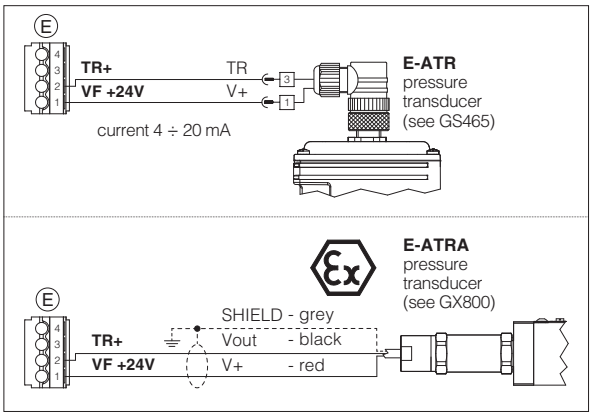

Coil connection

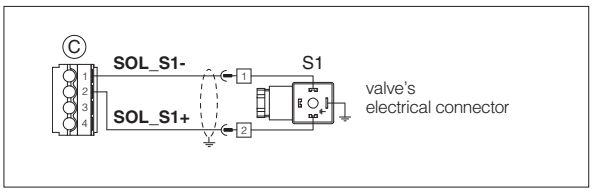

Potentiometer connection

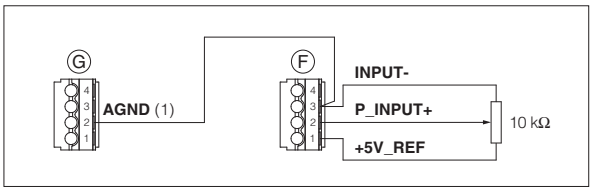

(1) As alternative the AGND on pin E4 can be used

4.3 Communication connectors ③ - ④ - ⑤ - ⑥ - ⑦

③ **USB connector - Mini USB type B** always present		
PIN	**SIGNAL**	**TECHNICAL SPECIFICATION** (1)
1	**+5V_USB**	Power supply
2	**D-**	Data line -
3	**D+**	Data line +
4	**ID**	Identification
5	**GND_USB**	Signal zero data line

④ **BC fieldbus execution, connector - DB9 - 9 pin**		
PIN	**SIGNAL**	**TECHNICAL SPECIFICATION** (1)
2	**CAN_L**	Bus line (low)
3	**CAN_GND**	Signal zero data line
5	**CAN_SHLD**	Shield
7	**CAN_H**	Bus line (high)

⑤ **BP fieldbus execution, connector - DB9 - 9 pin**		
PIN	**SIGNAL**	**TECHNICAL SPECIFICATION** (1)
1	**SHIELD**	
3	**LINE-B**	Bus line (low)
5	**DGND**	Data line and termination signal zero
6	**+5V**	Termination supply signal
8	**LINE-A**	Bus line (high)

(1) shield connection on connector's housing is recommended

⑥ ⑦ **EH fieldbus execution, connector - RJ45 - 8 pin**		
PIN	**SIGNAL**	**TECHNICAL SPECIFICATION** (1)
1	**TX+**	Transmitter - white/orange
2	**RX+**	Receiver - white/green
3	**TX-**	Transmitter - orange
6	**RX-**	Receiver - green

5 SET CODE

The basic calibration of electronic driver is factory preset, according to the proportional valve to be coupled. These pre-calibrations are identified by the set code at the end of driver's model code (see section 1). For correct set code selection, please include in the driver order also the complete code of the coupled proportional valve. For further information about set code, please contact Atos technical office.

6 POWER SUPPLY AND SIGNALS SPECIFICATIONS

Atos digital drivers are CE marked according to the applicable directives (e.g. Immunity and Emission EMC Directive).
Installation, wirings and start-up procedures must be performed according to the general prescriptions shown in the user manuals included in the E-SW-SETUP programming software. Generic electrical output signals of the valve (e.g. fault or monitor signals) must not be directly used to activate safety functions, like to switch-ON/OFF the machine's safety components, as prescribed by the European standards (Safety requirements of fluid technology systems and components-hydraulics, ISO 4413).

6.1 Power supply (V+ and V0)

The power supply must be appropriately stabilized or rectified and filtered: apply at least a 10000 μF/40 V capacitance to single phase rectifiers or a 4700 μF/40 V capacitance to three phase rectifiers. In case of double power supply see 6.4.
A safety fuse is required in series to each power supply: 2,5 A time lag fuse.

6.2 Pressure reference input signal (P_INPUT+)

The driver controls in closed loop the current to the valve pressure proportionally to the external reference input signal.
Reference input signal is factory preset according to selected valve code, defaults are 0 ÷ 10 VDC for standard and 4 ÷ 20 mA for /I option.
Input signal can be reconfigured via software selecting between voltage and current, within a maximum range of ±10 VDC or ± 20 mA.
Drivers with fieldbus interface (BC, BP, EH) can be software set to receive reference signal directly by the machine control unit (fieldbus reference).
Analog reference input signal can be used as on-off commands with input range 0 ÷ 24VDC.

6.3 Pressure monitor output signal (P_MONITOR)

The driver generates an analog output signal proportional to the actual pressure of the valve; the monitor output signal can be software set to show other signals available in the driver (e.g. analog reference, fieldbus reference).
Monitor output signal is factory preset according to selected valve code, defaults settings are 0 ÷10 VDC for standard and 4 ÷ 20 mA for /I option.
Output signal can be reconfigured via software selecting between voltage and current, within a maximum range of 0 ÷10 VDC or 0 ÷ 20 mA.

6.4 Power supply for driver's logic and communication (VL+ and VL0)

The power supply for driver's logic and communication must be appropriately stabilized or rectified and filtered: apply at least a 10000 μF/40 V capacitance to single phase rectifiers or a 4700 μF/40 V capacitance to three phase rectifiers.
The separate power supply for driver's logic on pin A3 and A4, allow to remove solenoid power supply from pin A1 and A2 maintaining active the diagnostics, USB and fieldbus communications.
A safety fuse is required in series to each driver's logic and communication power supply: 500 mA fast fuse.

6.5 Enable input signal (ENABLE)

To enable the driver, supply 24 VDC on pin B1: Enable input signal allows to enable/disable the current supply to the solenoid, without removing the electrical power supply to the driver; it is used to active the communication and the other driver functions when the valve must be disabled for safety reasons. This condition does not comply with European Norms EN13849-1 (ex EN954-1).

6.6 Fault output signal (FAULT)

Fault output signal indicates fault conditions of the driver (solenoid short circuits/not connected, reference signal broken for 4 ÷ 20 mA input, etc.).
Fault presence corresponds to 0 VDC, normal working corresponds to 24 VDC.
Fault status is not affected by the Enable input signal.

6.7 Pressure transducer integrated to the valve, input signal (TR+)

Analog pressure transducer integrated to the valve, has to be directly connected to the driver.
Analog input signal is factory preset according to selected driver code, default is 4 ÷ 20 mA.
Input signal can be reconfigured via software, within a maximum range of ± 20 mA.

6.8 Output supply for external potentiometer (±5V_REF) - not available for **EH** version

The reference analog signal can be generated by one external potentiometer directly connected to the driver, using the ±5 VDC supply output available at pin F1 and F4.
Note: using an external potentiometer, the reference input signal must be set via software at 0 ÷ 5 VDC (default 0 ÷10 VDC, see 6.2)

6.9 PID selection (D_IN0 and D_IN1)

Two on-off input signals are available on the pin H2 and H3 to select one of the four pressure PID parameters setting, stored into the driver.
Supply a 24 VDC or a 0 VDC on pin H2 and/or pin H3, to select one of the PID settings as indicated by binary code table at side. Gray code can be selected by software.
Refer to dynamic response for function description (see 8.1).

	PID SET SELECTION			
PIN	SET 1	SET 2	SET 3	SET 4
H2	0	24 VDC	0	24 VDC
H3	0	0	24 VDC	24 VDC

6.10 Possible combined options: /AI

7 VALVE SETTINGS AND PROGRAMMING TOOLS - see tech. table **GS500**

Free downloadable software for PC allows to set all valve functional parameters and to access complete diagnostic information of digital drivers via USB service port.
Atos E-SW-SETUP PC software supports all Atos digital valve drivers and it is available at www.atos.com in MyAtos area.

WARNING: drivers USB port is not isolated! For E-C-SB-USB/BM cable, the use of E-A-SB-USB/OPT isolator adapter is highly recommended for PC protection

Note: Bluetooth connection is not available for E-BM-RES drivers

USB connection

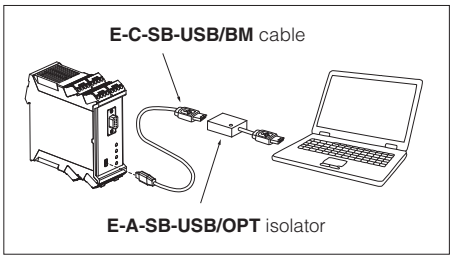

8 MAIN SOFTWARE PARAMETER SETTINGS

The following is a brief description of the main settings and features of digital drivers. For a detailed descriptions of available settings, wirings and installation procedures, please refer to the user manual included in the E-SW-SETUP programming software:

E-MAN-BM-RES - user manual for **E-BM-RES**

8.1 Smart tuning

Smart tuning allows to adjust the valve dynamic response in order to match different hydraulic conditions and performance requirements.

The valve is provided with 3 factory settings for the pressure control:
- **dynamic** fast response time for best dynamic performances. Default factory setting for pressure valves
- **balanced** average response time suitable for major applications
- **smooth** attenuated response time for slow regulation without overshoots

Smart tuning setting can be switched from Dynamic (default) to Balanced or Smooth via software or fieldbus; if requested, performances can be further customized directly tuning each single control parameter.

Below indications have to be considered as a general guideline, being affected by hydraulic circuit stiffness, working flow and dead volume.

High stiffness - Low flow - Small volume

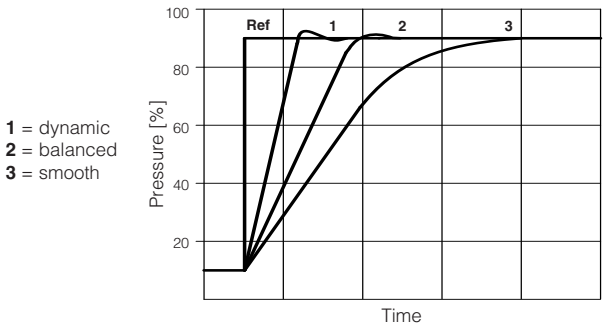

Low stiffness - High flow - Large volume

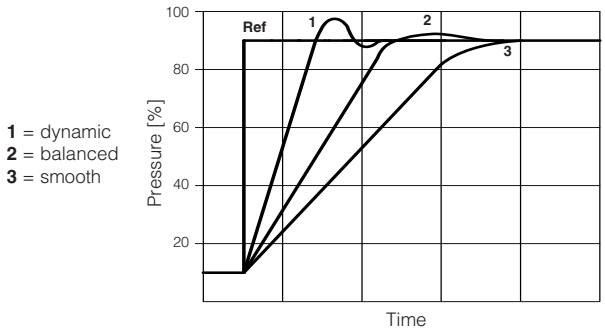

8.2 Pressure transducer failure

This function is available only for pressure transducer input configured in current as 4 ÷ 20 mA.
In case of pressure transducer failure, the valve's reaction can be configured through Atos E-SW-SETUP software to:
- cut off the current to solenoid, therefore the regulated pressure will be reduced to minimum value (default setting)
- automatically switch the pressure control from closed loop (dynamic, balaced, smooth) to open loop, to let the valve to temporarily operate with reduced regulation accuracy

8.3 Scale

Scale function allows to set the maximum current supplied to the solenoid, corresponding to the max pressure valve regulation, at maximum reference signal value.
This regulation allows to adapt the maximum current supplied from the driver to the specific nominal current of the pressure proportional valves to which the driver is coupled; it is also useful to reduce the maximum valve regulation in front of maximum reference signal.

8.3, 8.4 - Scale, Bias & Threshold

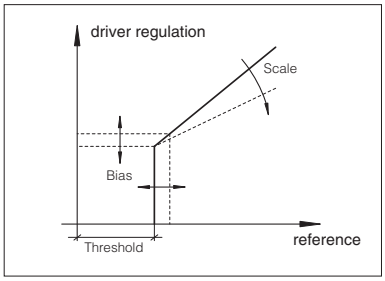

8.4 Bias and Threshold

Pressure proportional valves may be provided with a dead band in the hydraulic regulation corresponding to their switch-off status.
This dead band discontinuity in the pressure valve's regulation can be compensated by activating the Bias function, which adds a fixed preset Bias value to the reference signal (analog or fieldbus external input).
The Bias function is activated when the reference signal overcomes the Threshold value, preset into the driver.
The Bias setting allows to calibrate the Bias current to the specific pressure proportional valve to which the driver is coupled.
The Threshold setting is useful to avoid undesired valve regulation at zero reference signal when electric noise is present on the analog input signal: smaller threshold reduces the reference signal dead band, greater values are less affected by electric noise presence.
If fieldbus reference signal is active (see 6.2), threshold should be set to zero.
Refer to the programming manuals for a detailed description of other software selectable Bias functions.

8.5 - Ramps

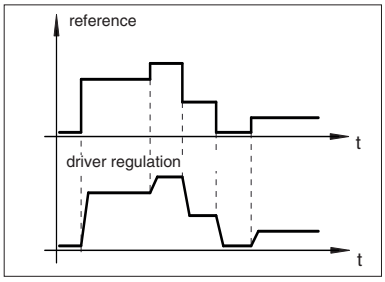

8.5 Ramps

The ramp generator allows to convert sudden change of electronic reference signal into smooth time-dependent increasing/decreasing of the current supplied to the solenoid.

Different ramp mode can be set:
- single ramp for any reference variation
- two ramps for increasing and for decreasing reference variations

Ramp generator is useful for application where smooth hydraulic actuation is necessary to avoid machine vibration and shocks.
If the pressure proportional valve is driven by a closed loop controller, the ramps can lead to unstable behaviour, for these applications ramp function can be software disabled (default setting).

8.6 - Linearization

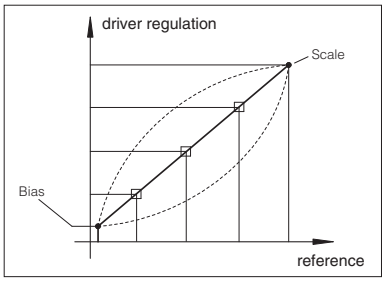

8.6 Linearization - E-SW-SETUP level 2 functionality

Linearization function allows to set the relation between the reference input signal and the controlled valve's pressure regulation. Linearization is useful for applications where it is required to linearize the valve's pressure regulation in a defined working condition.

9 OVERALL DIMENSIONS [mm]

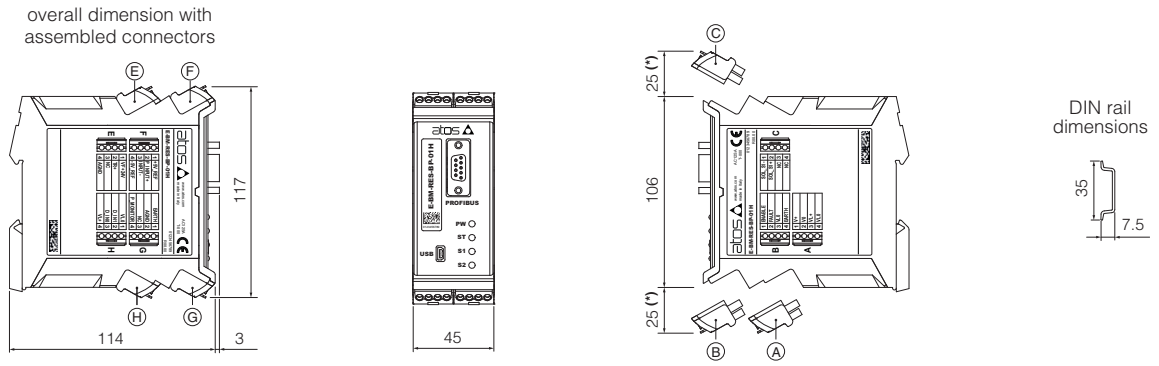

A, B, C, E, F, G, H connectors included

(*) Space to remove the connectors

10 INSTALLATION

To wire cables in the connectors:
1. insert cable into the termination
2. turn screw with a screwdriver

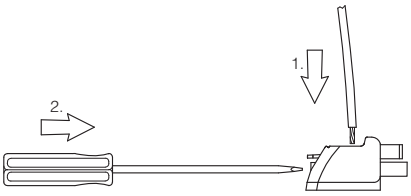

Note: max conductor size: 2,5 mm²
tightening torque: 0,4 ÷ 0,6 Nm

To unlock the driver from the DIN rail:
1. pull down the locking slide with a screwdriver
2. rotate up the driver

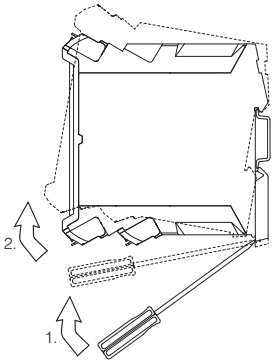

To extract the connectors:
1. push lever
2. pull connector

To insert the connectors:
1. push the connector in its slot

Note: all connectors are supplied with a mechanical coding. This feature ensures a unique insertion of each connector in the own slot (eg. connector A can not be inserted into connector slot of B, C, E, F, G, H)

Digital electronic E-BM-AES drivers

DIN-rail format, for proportional valves without transducer

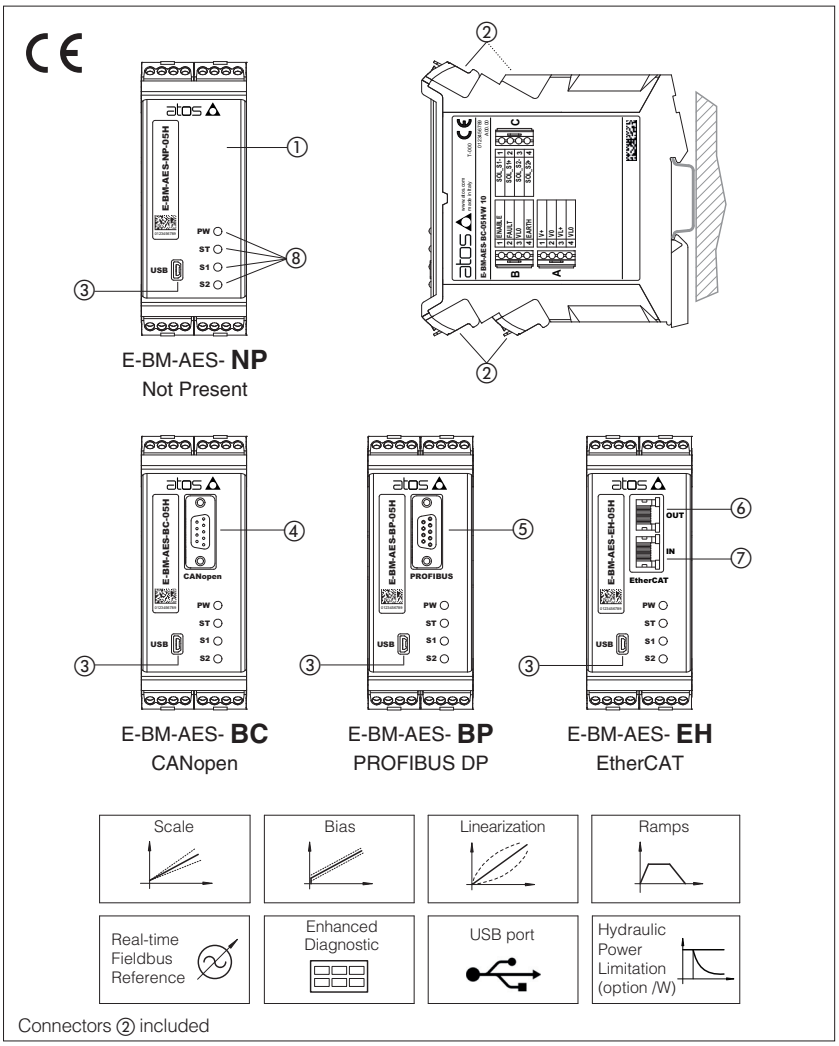

E-BM-AES

Digital drivers ① control the current to the solenoid of Atos proportional valves without transducer, according to the electronic reference input signal.
E-BM-AES operate direct and pilot operated proportional valves ZO-A without transducer.
Atos PC software allows to customize the driver configuration to the specific application requirements.

Electrical Features:

- 7 fast plug-in connectors ②
- Mini USB port ③ always present
- DB9 CANopen ④ and PROFIBUS DP ⑤ communication connector
- RJ45 EtherCAT communication connectors ⑥ output and ⑦ input
- 4 leds for diagnostics ⑧ (see 4.1)
- ±5 VDC output supply for external reference potentiometer
- Electrical protection against reverse polarity of power supply
- Operating temperature range: -20 ÷ +60 °C
- Plastic box with IP20 protection degree and standard DIN-rail mounting
- CE mark according to EMC directive

Software Features:

- Intuitive graphic interface
- Setting of valve's functional parameters: bias, scale, ramps, dither, PID gains
- Linearization function for hydraulic regulation
- /W option max power limitation function
- Complete diagnostics of driver status
- Internal oscilloscope function
- In field firmware update through USB port

Fieldbus Features:

- Valve direct communication with machine control unit for digital reference, diagnostics and settings
- Fieldbus execution allow to operate the valves via fieldbus or via analog signals available on the connectors (see 4.2)

1 MODEL CODE

E-BM - **AES** - **NP** - **01H** / ***** *****

E-BM: Off-board electronic driver in DIN rail format

AES = digital full driver, for valves without transducer

Fieldbus interface - USB port always present:
NP = Not Present
BC = CANopen
BP = PROFIBUS DP
EH = EtherCAT

01H = for single solenoid proportional valves
05H = for double solenoid proportional valves

Options:
A = max current limitation for Ex-proof valves
C = current feedback 4 ÷ 20 mA for remote transducer, only in combination with option **W**
I = current reference input 4 ÷ 20 mA (omit for standard voltage reference input ±10 VDC)
W = power limitation function

Series number

2 VALVES RANGE

Valves	Pressure									Directional			Cartridge	Flow	
Industrial Tech table	**RZMO HMZO** FS007 FS065	**RZME CART RZME** F005	**RZGO HZGO KZGO** FS015 FS070	**RZGE CART RZGE** F012	**AGMZO** FS035	**AGMZE** F030	**AGRCZO** FS050	**DHRZO** FS025	**DHRZE** F022	**DHZO DKZOR** FS160	**DHZE DKZE** F150	**DPZO DPZE** FS170 F171	**LIMZO LIRZO LICZO** FS300	**QVHZO QVKZOR** FS410	**QVHZE QVKZE** F400
Ex-proof Tech table	**RZMA HZMA** FX010	-	**RZGA HZGA KZGA** FX040	-	**AGMZA** FX010	-	**AGRCZA** FX040	**DHRZA** FX070	-	**DHZA DKZA** FX100	-	**DPZA** FX200	**LIMZA LIRZA LICZA** FX300	**QVHZA QVKZA** FX400	-

3 MAIN CHARACTERISTICS

Power supply (see 5.1, 5.2)	Nominal : +24 V_{DC} Rectified and filtered : V_{RMS} = 20 ÷ 32 V_{MAX} (ripple max 10 % V_{PP})			
Max power consumption	50 W			
Current supplied to solenoids	I_{MAX} = 2.7 A with +24 V_{DC} power supply to drive standard proportional valves (3,2 Ω solenoid) I_{MAX} = 2.5 A with +24 V_{DC} power supply to drive ex-proof proportional valves (3,2 Ω solenoid) for **/A option**			
Analog input signals (see 5.3)	Voltage: maximum range ±10 V_{DC} Input impedance: Ri > 50 kΩ Current: maximum range ±20 mA Input impedance: Ri = 500 Ω			
Monitor output (see 5.4)	Voltage: maximum range ±5 V_{DC} @ max 5 mA			
Enable input (see 5.5)	Range : 0 ÷ 9 V_{DC} (OFF state), 15 ÷ 24 V_{DC} (ON state), 9 ÷ 15 V_{DC} (not accepted); Input impedance: Ri > 87 kΩ			
Output supply (see 5.8)	±5 V_{DC} @ max 10 mA : output supply for external potentiometer			
Fault output (see 5.6)	Output range : 0 ÷ 24 V_{DC} (ON state ≅ VL+ [logic power supply] ; OFF state ≅ 0 V) @ max 50 mA; external negative voltage not allowed (e.g. due to inductive loads)			
Pressure transducer power supply (only for /W option)	+24V_{DC} @ max 100 mA (E-ATR-8 see tech table **GS465**; E-ATRA-7 for ex-proof, see tech table **GX800**)			
Alarms	Solenoid not connected/short circuit, cable break with current reference signal, over/under temperature, power supplies level, pressure transducer failure			
Format	Plastic box ; IP20 protection degree ; L 35 - H 7,5 mm DIN-rail mounting as per EN60715			
Operating temperature	-20 ÷ +60 °C (storage -25 ÷ +85 °C)			
Mass	Approx. 330 g			
Additional characteristics	Short circuit protection of solenoid current supply; current control by P.I.D. with rapid solenoid switching; protection against reverse polarity of power supply			
Compliance	CE according to EMC directive 2014/30/EU (Immunity: EN 61000-6-2; Emission: EN 61000-6-3) RoHS Directive 2011/65/EU as last update by 2015/863/EU REACH Regulation (EC) n°1907/2006			
Communication interface	USB Atos ASCII coding	CANopen EN50325-4 + DS408	PROFIBUS DP EN50170-2/IEC61158	EtherCAT IEC61158
Communication physical layer	not insulated USB 2.0 + USB OTG	optical insulated CAN ISO11898	optical insulated RS485	Fast Ethernet 100 Base TX
Recommended wiring cable	LiYCY shielded cables: 0,5 mm^2 max 50 m for logic - 1,5 mm^2 max 50 m for power supply and solenoids			
Max conductor size (see 9)	2,5 mm^2			

Note: a maximum time of 500 ms (depending on communication type) have be considered between the driver energizing with the 24 V_{DC} power supply and when the valve is ready to operate. During this time the current to the valve coils is switched to zero.

4 CONNECTIONS AND LEDS

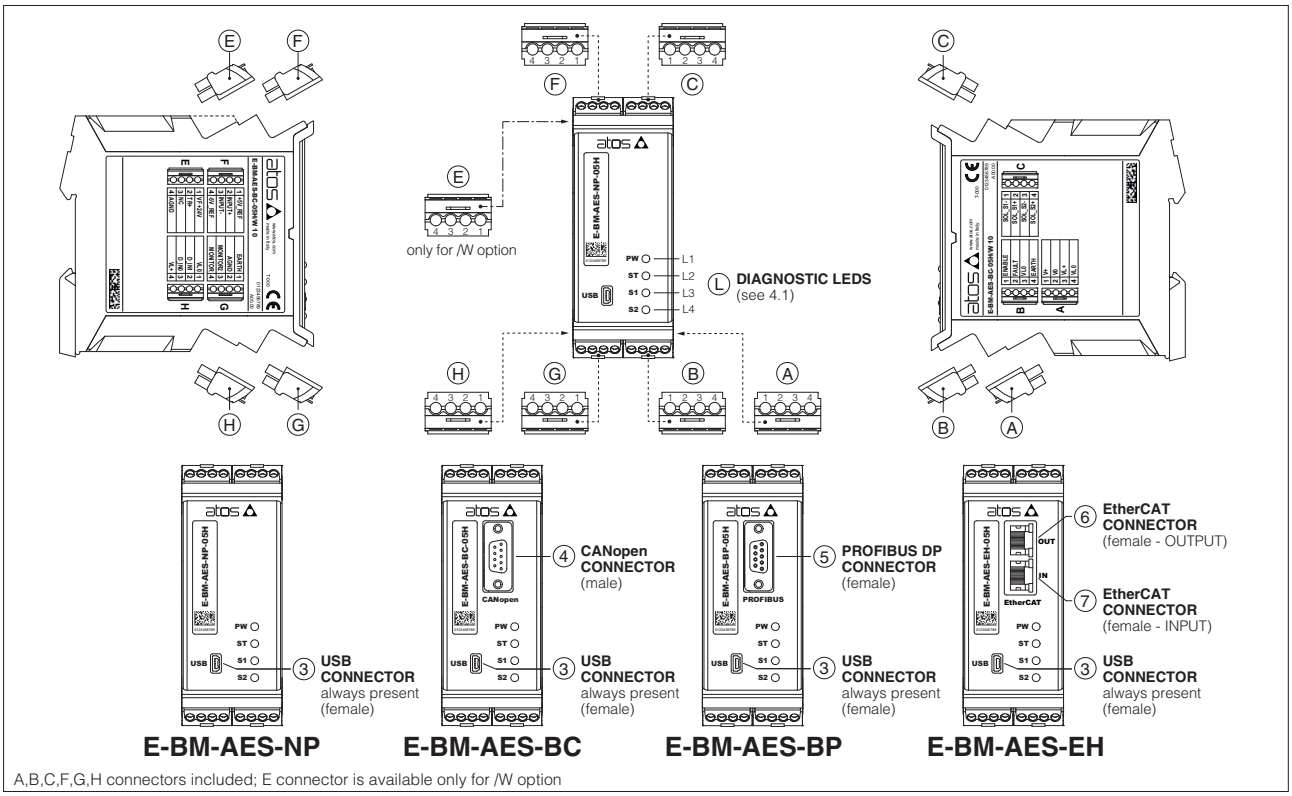

A,B,C,F,G,H connectors included; E connector is available only for /W option

4.1 Diagnostic LEDs (L)

Four leds show driver operative conditions for immediate basic diagnostics. Please refer to the driver user manual for detailed information.

LED	COLOR	FUNCTION	FLASH RATE	DESCRIPTION
L1	GREEN	PW	OFF	Power supply OFF
			ON	Power supply ON
L2	GREEN	ST	OFF	Fault present
			ON	No fault
L3 and L4	YELLOW	S1 and S2	OFF	PWM command OFF
			ON	PWM command ON

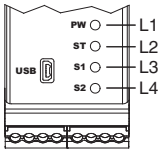

4.2 Connectors - 4 pin

CONNECTOR	PIN	SIGNAL	TECHNICAL SPECIFICATIONS	NOTES
A	A1	**V+**	Power supply 24 VDC (see 5.1)	Input - power supply
	A2	**V0**	Power supply 0 VDC (see 5.1)	Gnd - power supply
	A3	**VL+**	Power supply 24 VDC for driver's logic and communication (see 5.2)	Input - power supply
	A4	**VL0**	Power supply 0 VDC for driver's logic and communication (see 5.2)	Gnd - power supply
B	B1	**ENABLE**	Enable (24 VDC) or disable (0 VDC) the driver, referred to VL0 (see 5.5)	Input - on/off signal
	B2	**FAULT**	Fault (0 VDC) or normal working (24 VDC), referred to VL0 (see 5.6)	Output - on/off signal
	B3	**VL0**	Ground for ENABLE and FAULT	Gnd - digital signals
	B4	**EARTH**	Connect to system ground	
C	C1	**SOL_S1-**	Negative current to solenoid S1	Output - power PWM
	C2	**SOL_S1+**	Positive current to solenoid S1	Output - power PWM
	C3	**SOL_S2-**	Negative current to solenoid S2	Output - power PWM
	C4	**SOL_S2+**	Positive current to solenoid S2	Output - power PWM
E available only for **/W** option	E1	**VF +24V**	Power supply +24 VDC	Output - power supply
	E2	**TR+**	Positive pressure transducer input signal: ±10 VDC / ±20 mA maximum range (see 5.7) Default are 0 ÷ 10 VDC for standard and 4 ÷ 20 mA for /C option	Input - analog signal **Software selectable**
	E3	**NC**	Do not connect	
	E4	**AGND**	Common gnd for transducer power, signals and external potentiometer	
F	F1	**+5V_REF**	External potentiometer power supply +5 VDC @ 10mA (see 5.8)	Output - power supply
	F2	**INPUT+**	Positive reference input signal: ±10 VDC / ±20 mA maximum range (see 5.3) Default are ±10 VDC for standard and 4 ÷ 20 mA for /I option	Input - analog signal **Software selectable**
	F3	**INPUT-**	Negative reference input signal for INPUT+	Input - analog signal
	F4	**-5V_REF**	External potentiometer power supply -5 VDC @ 10mA (see 5.8)	Output - power supply
G	G1	**EARTH**	Connect to system ground	
	G2	**AGND**	Analog ground for monitor and external potentiometer	Gnd - analog signal
	G3	**MONITOR2**	Only for /W option, 2nd monitor output signal: ±5 VDC maximum range (see 5.4) Default is 0 ÷ 5 VDC	Output - analog signal **Software selectable**
	G4	**MONITOR**	Monitor output signal: ±5 VDC maximum range (see 5.4) Default is ±5 VDC (1V = 1A)	Output - analog signal **Software selectable**
H	H1	**VL0**	Power supply 0 VDC for digital input (see 5.2)	Gnd - power supply
	H2	**D_IN1**	Digital input 0 ÷ 24VDC, referred to VL0	Input - on/off signal
	H3	**D_IN0**	Digital input 0 ÷ 24VDC, referred to VL0	Input - on/off signal
	H4	**VL+**	Power supply 24 VDC for digital input (see 5.2)	Output - power supply

Pressure transducer connections - only for **/W** option

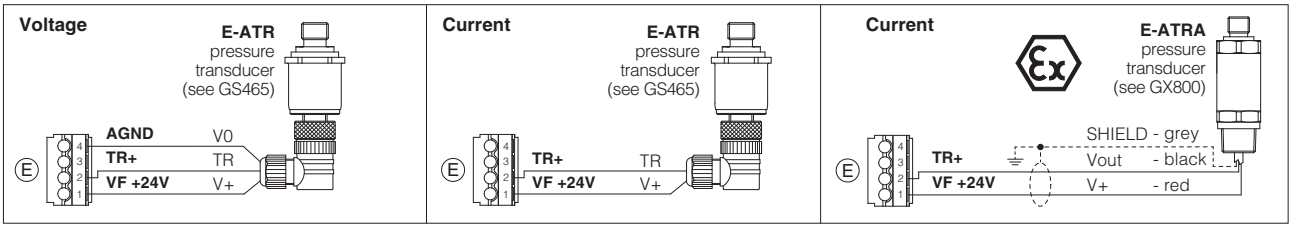

Coils connection

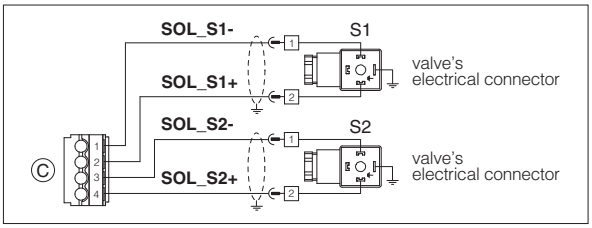

Potentiometer connection

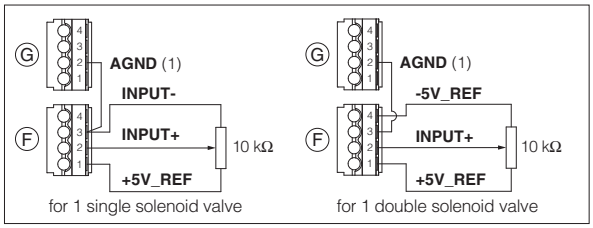

(1) As alternative the AGND on pin E4 can be used (only /W option)

4.3 Communication connectors ③ - ④ - ⑤ - ⑥ - ⑦

③ **USB connector - Mini USB type B** always present		
PIN	**SIGNAL**	**TECHNICAL SPECIFICATION** (1)
1	**+5V_USB**	Power supply
2	**D-**	Data line -
3	**D+**	Data line +
4	**ID**	Identification
5	**GND_USB**	Signal zero data line

④ **BC fieldbus execution, connector - DB9 - 9 pin**		
PIN	**SIGNAL**	**TECHNICAL SPECIFICATION** (1)
2	**CAN_L**	Bus line (low)
3	**CAN_GND**	Signal zero data line
5	**CAN_SHLD**	Shield
7	**CAN_H**	Bus line (high)

⑤ **BP fieldbus execution, connector - DB9 - 9 pin**		
PIN	**SIGNAL**	**TECHNICAL SPECIFICATION** (1)
1	**SHIELD**	
3	**LINE-B**	Bus line (low)
5	**DGND**	Data line and termination signal zero
6	**+5V**	Termination supply signal
8	**LINE-A**	Bus line (high)

(1) shield connection on connector's housing is recommended

⑥ ⑦ **EH fieldbus execution, connector - RJ45 - 8 pin**		
PIN	**SIGNAL**	**TECHNICAL SPECIFICATION** (1)
1	**TX+**	Transmitter - white/orange
2	**RX+**	Receiver - white/green
3	**TX-**	Transmitter - orange
6	**RX-**	Receiver - green

5 POWER SUPPLY AND SIGNALS SPECIFICATIONS

Atos digital drivers are CE marked according to the applicable directives (e.g. Immunity and Emission EMC Directive).
Installation, wirings and start-up procedures must be performed according to the general prescriptions shown in the user manuals included in the E-SW-SETUP programming software.
Generic electrical output signals of the valve (e.g. fault or monitor signals) must not be directly used to activate safety functions, like to switch-ON/OFF the machine's safety components, as prescribed by the European standards (Safety requirements of fluid technology systems and components-hydraulics, ISO 4413).

5.1 Power supply (V+ and V0)

The power supply must be appropriately stabilized or rectified and filtered: apply at least a 10000 μF/40 V capacitance to single phase rectifiers or a 4700 μF/40 V capacitance to three phase rectifiers.
In case of double power supply see 5.2.

⚠ A safety fuse is required in series to each power supply: 2,5 A time lag fuse.

5.2 Power supply for driver's logic and communication (VL+ and VL0)

The power supply for driver's logic and communication must be appropriately stabilized or rectified and filtered: apply at least a 10000 μF/40 V capacitance to single phase rectifiers or a 4700 μF/40 V capacitance to three phase rectifiers.
The separate power supply for driver's logic on pin A3 and A4, allow to remove solenoid power supply from pin A1 and A2 maintaining active the diagnostics, USB and fieldbus communications.

⚠ A safety fuse is required in series to each driver's logic and communication power supply: 500 mA fast fuse.

5.3 Reference input signal (INPUT+)

The driver controls in closed loop the current to the valve proportionally to the external reference input signal.
Reference input signal is factory preset according to selected valve code, defaults are ±10 VDC for standard and 4 ÷ 20 mA for /I option.
Input signal can be reconfigured via software selecting between voltage and current, within a maximum range of ±10 VDC or ± 20 mA.
Drivers with fieldbus interface (BC, BP, EH) can be software set to receive reference signal directly from the machine control unit (fieldbus reference). Analog reference input signal can be used as on-off commands with input range 0 ÷ 24VDC.

5.4 Monitor output signals (MONITOR and MONITOR2)

The driver generates an analog output signal (MONITOR) proportional to the actual coil current of the valve; the monitor output signal can be software set to show other signals available in the driver (e.g. analog reference, fieldbus reference).
Monitor output signal is factory preset according to selected valve code, default settings is ±5 VDC (1V = 1A).
Output signal can be reconfigured via software, within a maximum range of ±5 VDC.

Option /W
The driver generates a second analog output signal (MONITOR2) proportional to the actual system pressure.
The output maximum range is ±5 VDC; default setting is 0 ÷ 5 VDC.

5.5 Enable input signal (ENABLE)

To enable the driver, supply 24 VDC on pin B1: Enable input signal allows to enable/disable the current supply to the solenoid, without removing the electrical power supply to the driver; it is used to active the communication and the other driver functions when the valve must be disabled for safety reasons. This condition does not comply with European Norms EN13849-1 (ex EN954-1).

5.6 Fault output signal (FAULT)

Fault output signal indicates fault conditions of the driver (solenoid short circuits/not connected, reference signal broken for 4 ÷ 20 mA input, etc.).
Fault presence corresponds to 0 VDC, normal working corresponds to 24 VDC.
Fault status is not affected by the Enable input signal.

5.7 Remote pressure transducer input signal (TR+) - only for **/W** option

Analog pressure transducers can be directly connected to the driver.
Analog input signal is factory preset according to selected driver code, defaults are 0 ÷ 10 VDC for standard and 4 ÷ 20 mA for /C option.
Input signal can be reconfigured via software selecting between voltage and current, within a maximum range of ±10 VDC or ± 20 mA.
Note: transducer feedback can be read as a digital information through fieldbus communication - software selectable.

5.8 Output supply for external potentiometer (±5V_REF) - not available for **EH** version

The reference analog signal can be generated by one external potentiometer directly connected to the driver, using the ±5 VDC supply output available at pin F1 and F4.
Note: using an external potentiometer, the reference input signal must be set via software at ±5 VDC (default ±10 VDC, see 5.3)

5.9 Possible combined options: /AI, /AW, /IW, /AIW, /ACW, /CIW, /ACIW, /CW

6 VALVE SETTINGS AND PROGRAMMING TOOLS - see tech. table **GS500**

Free downloadable software for PC allows to set all valve functional parameters and to access complete diagnostic information of digital drivers via USB service port.
Atos E-SW-SETUP PC software supports all Atos digital valve drivers and it is available at www.atos.com in MyAtos area.

⚠ **WARNING: drivers USB port is not isolated!** For E-C-SB-USB/BM cable, the use of E-A-SB-USB/OPT isolator adapter is highly recommended for PC protection

Note: Bluetooth connection is not available for E-BM-AES drivers

USB connection

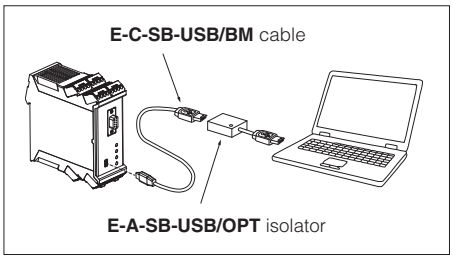

7 MAIN SOFTWARE PARAMETER SETTINGS

The following is a brief description of the main settings and features of digital drivers.
For a detailed descriptions of available settings, wirings and installation procedures, please refer to the user manual included in the E-SW-SETUP programming software:
E-MAN-BM-AES - user manual for **E-BM-AES**

7.1 Scale

Scale function allows to set the maximum current supplied to the solenoid, corresponding to the max valve regulation, at maximum reference signal value.
This regulation allows to adapt the maximum current supplied from the driver to the specific nominal current of the proportional valves to which the driver is coupled; it is also useful to reduce the maximum valve regulation in front of maximum reference signal.
Two different Scale regulations are available for double solenoid valves: ScaleA for positive reference signal and ScaleB for negative reference signal.

7.2 Bias and Threshold

Proportional valves may be provided with a dead band in the hydraulic regulation corresponding to their switch-off status.
This dead band discontinuity in the valve's regulation can be compensated by activating the Bias function, which adds a fixed preset Bias value to the reference signal (analog or fieldbus external input).
The Bias function is activated when the reference signal overcomes the Threshold value, preset into the driver.
The Bias setting allows to calibrate the Bias current to the specific proportional valve to which the driver is coupled.
The Threshold setting is useful to avoid undesired valve regulation at zero reference signal when electric noise is present on the analog input signal: smaller threshold reduces the reference signal dead band, greater values are less affected by electric noise presence.
If fieldbus reference signal is active (see 5.3), threshold should be set to zero.
Two different Bias regulations are available for double solenoid valves: positive reference signals activate BiasA and negative reference signals activate BiasB.
Refer to the programming manuals for a detailed description of other software selectable Bias functions.

7.3 Offset

Proportional valves may be provided with zero overlapping in the hydraulic regulation corresponding to zero reference input signal (valve's central spool position).
The Offset function allows to calibrate the Offset current, required to obtain valve's spool central position, to the specific hydraulic system setup (e.g. valve applied to cylinder with differential areas).

7.4 Ramps

The ramp generator allows to convert sudden change of electronic reference signal into smooth time-dependent increasing/decreasing of the current supplied to the solenoid.
Different ramp mode can be set:
- single ramp for any reference variation
- two ramps for increasing and for decreasing reference variations
- four ramps for positive/negative signal values and increasing/decreasing reference variations

Ramp generator is useful for application where smooth hydraulic actuation is necessary to avoid machine vibration and shocks.
If the proportional valve is driven by a closed loop controller, the ramps can lead to unstable behaviour, for these applications ramp function can be software disabled (default setting).

7.5 Linearization - E-SW-SETUP level 2 functionality

Linearization function allows to set the relation between the reference input signal and the controlled valve's regulation.
Linearization is useful for applications where it is required to linearize the valve's regulation in a defined working condition.

7.6 Variable Dither

The dither is the frequency modulation of the current supplied to the solenoid. To reduce the hysteresis should be selected a lower value of frequency, despite a lower regulation stability, because a small vibration in the valve regulating parts considerably reduces static friction effects.
To improve the regulation stability, should be selected a high value of frequency, despite a higher hysteresis. This solution in some application can lead to vibration and noise. Normally, the right setting is a compromise and depends on system setup.
E-BM-AES drivers allow to realize a variable dither frequency that linearly depends on the demanded current: variable dither frequency allows an higher degree to optimize the valve hysteresis.

7.7 Hydraulic Power Limitation - only for **/W** option

Digital E-BM-AES drivers with /W option electronically perform hydraulic power limitation on:
- direct and pilot operated flow control valves
- direct and pilot operated directional control valves + mechanical pressure compensator
- variable displacement pumps with proportional flow regulator (e.g. PVPC-*-LQZ, tech table **AS170**)

The driver receives the flow reference signal by the analog external input INPUT+ (see 5.3) and a pressure transducer, installed in the hydraulic system, has to be connected to the driver's analog input TR (see 5.7).
When the actual requested hydraulic power **p**x**Q** (TR x INPUT+) reaches the max power limit (p1xQ1), internally set by software, the driver automatically reduces the flow regulation of the valve. The higher is the pressure feedback the lower is the valve's regulated flow:

$$\text{Flow regulation} = \text{Min}\left(\frac{\text{PowerLimit [sw setting]}}{\text{Transducer Pressure [TR]}}\ ;\ \text{Flow Reference [INPUT+]}\right)$$

7.1, 7.2 - Scale, Bias & Threshold

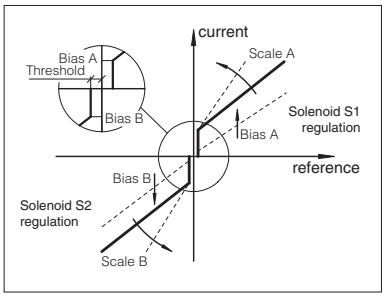

7.3 - Offset

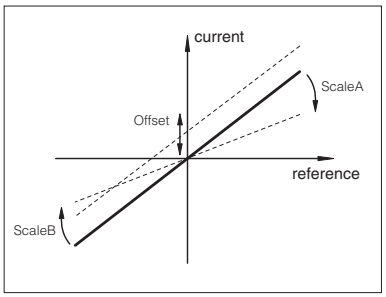

7.4 - Ramps

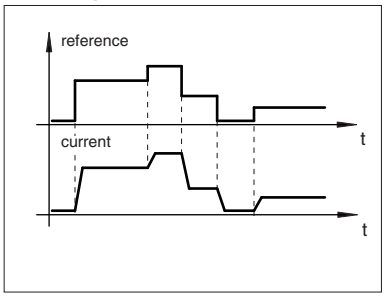

7.5 - Linearization

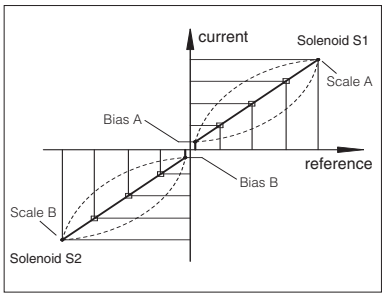

7.6 - Variable Dither

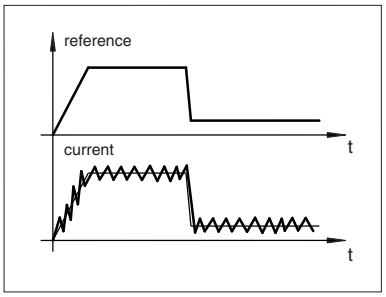

7.7 - Hydraulic Power Limitation

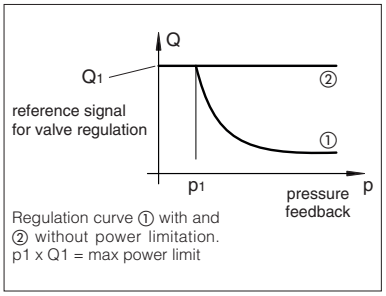

8 OVERALL DIMENSIONS [mm]

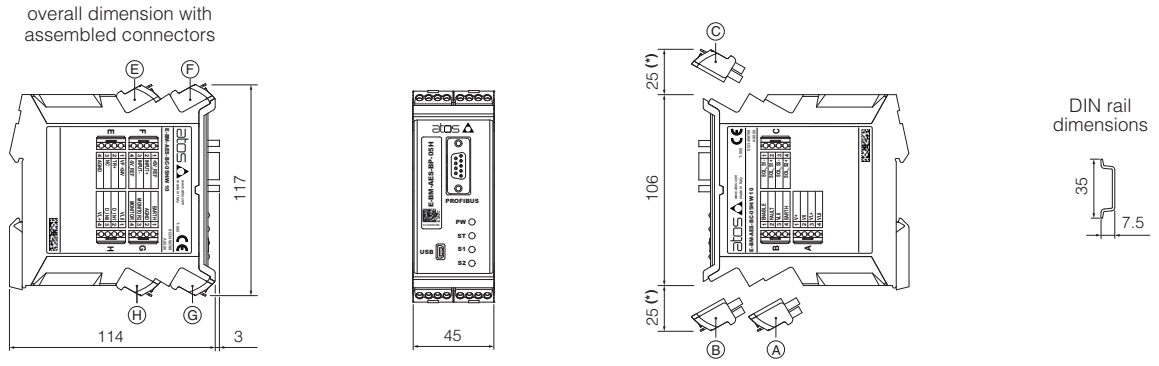

A,B,C,F,G,H connectors included; E connector is available only for /W option

(*) Space to remove the connectors

9 INSTALLATION

To wire cables in the connectors:
1. insert cable into the termination
2. turn screw with a screwdriver

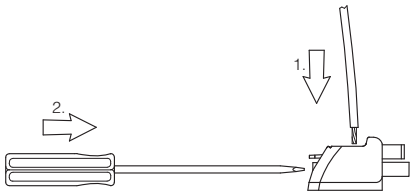

Note: max conductor size: 2,5 mm²
tightening torque: 0,4 ÷ 0,6 Nm

To unlock the driver from the DIN rail:
1. pull down the locking slide with a screwdriver
2. rotate up the driver

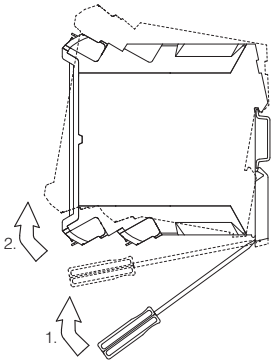

To extract the connectors:
1. push lever
2. pull connector

To insert the connectors:
1. push the connector in its slot

Note: all connectors are supplied with a mechanical coding. This feature ensures a unique insertion of each connector in the own slot (eg. connector A can not be inserted into connector slot of B, C, E, F, G, H)

Digital electronic E-BM-AS drivers

DIN-rail format, for proportional valves without transducer

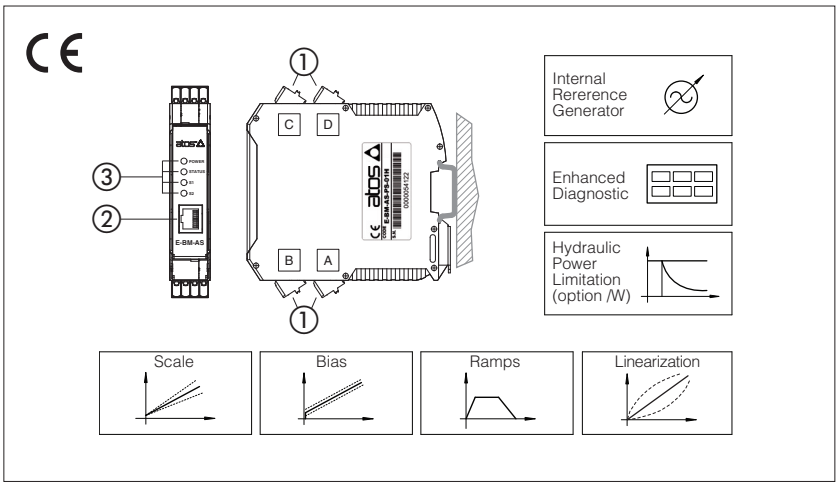

E-BM-AS

Digital drivers control the current to the solenoid of Atos proportional valves without transducer, according to the electronic reference input signal.
The solenoid proportionally transforms the current into a force, acting on the valve spool or poppet, against a reacting spring, thus providing the hydraulic regulation.
E-BM-AS can drive up to two single or one double solenoid proportional valves.

Electrical Features:

- 4 fast plug-in connectors ①
- RJ45 connector ② for RS232 Serial communication to program the driver with the Atos PC software
- 4 leds for diagnostics ③ (see section 10)
- ±5 VDC output supply for external reference potentiometers (/P option)
- Electrical protection against reverse polarity of power supply
- Operating temperature range: -20 ÷ +60 °C
- Plastic box with IP20 protection degree and standard DIN-rail mounting
- CE mark according to EMC directive

Software Features:

- Intuitive graphic interface
- Setting of valve's functional parameters: bias, scale, ramps, dither
- Linearization function for the hydraulic regulation
- 2 selectable modes for electronic reference signal: external analog input or internal generation
- /W option max power limitation function
- Complete diagnostics of driver status

1 MODEL CODE

E-BM - AS - PS - 01H / * *

Off-board electronic driver in DIN rail format

AS = digital basic driver, for valves without transducer

PS = Serial communication interface

01H = for single solenoid proportional valves
05H = for double solenoid or two single solenoid proportional valves

Series number

Options:

- **-** = standard 24 VDC power supply
- **12** = 12 VDC power supply
- **A** = max current limitation for ex-proof valves
- **C** = current feedback 4 ÷ 20 mA for remote transducer, only for **IW**
- **I** = current reference input 4 ÷ 20 mA (omit for standard voltage reference input ±10 VDC)
- **P** = electrical supply for external potentiometers to generate reference signal, not available with **I** option (see 4.4)
- **W** = power limitation function, only for **05H** (see 7.7)

2 BLOCK DIAGRAM

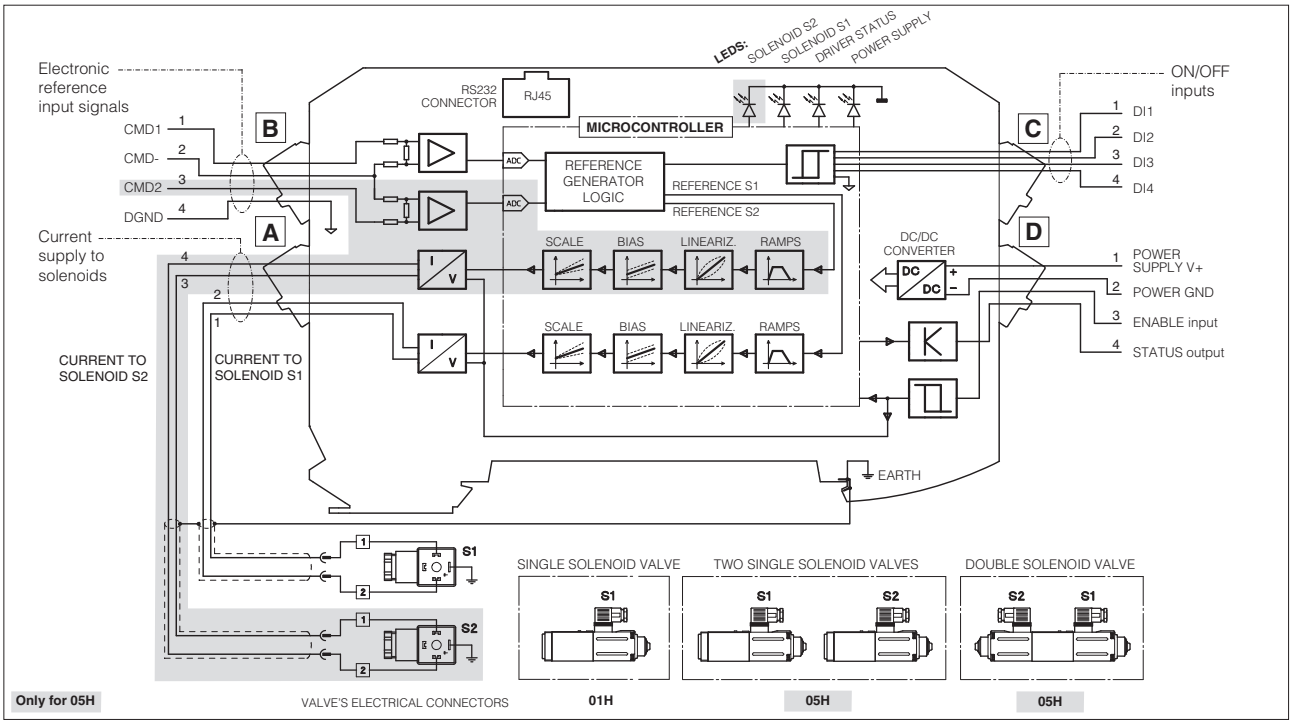

3 MAIN CHARACTERISTICS

Power supply (see 4.1)	**Standard** Nominal: +24 VDC Rectified and filtered: VRMS = 20 ÷ 32 VMAX (ripple max 10 % VPP) **option /12** Nominal: +12 VDC Rectified and filtered: VRMS = 10 ÷ 14 VMAX (ripple max 10 % VPP)
Max power consumption	50 W 01H single solenoid valve and 05H double solenoid valve 100 W 05H two single solenoid valves
Current supplied to solenoids	IMAX = 2.7 A with +24 VDC power supply for standard proportional valves (3,2 Ω solenoid) IMAX = 3.3 A with +12 VDC power supply for proportional valves with /6 option (2,1 Ω solenoid) IMAX = 2.5 A with +24 VDC power supply for ex-proof proportional valves (3,2 Ω solenoid) for **/A option**
Analog input signal (see 4.2)	Voltage: range ±10 VDC Input impedance: Ri > 50 kΩ Current: range ±20 mA Input impedance: Ri = 500 Ω
Enable input (see 4.5)	Range : 0 ÷ 24 VDC (OFF state: 0 ÷ 0,75 VDC ; ON state: 0,75 ÷ 24 VDC) Input impedance: Ri > 10 kΩ
Optical insulated ON/OFF inputs (see 4.7)	Range : 0 ÷ 24 VDC (OFF state: 0 ÷ 9,5 VDC ; ON state: 9,5 ÷ 24 VDC) Input impedance: Ri > 10 kΩ
Output supply (see 4.4)	±5 VDC @ max 10 mA : output supply for external potentiometers (only for **/P option**)
Status output (see 4.6)	Output range : 0 ÷ 24 VDC (ON state > [power supply - 2 V] ; OFF state < 1 V) @ max 1,4 A
Alarms	Solenoid not connected, short circuit and cable break with current reference signal
Format	Plastic box ; IP20 protection degree ; L 35 - H 7,5 mm rail mounting as per EN60715
Operating temperature	-20 ÷ +60 °C (-20 ÷ +40 °C for 05H version if drive two single solenoid proportional valves; storage -25 ÷ +85 °C)
Mass	130 g
Additional characteristics	Short circuit protection of current output to solenoids; protection against reverse polarity of power supply
Compliance	CE according to EMC directive 2014/30/EU (Immunity: EN 61000-6-2; Emission: EN 61000-6-4) RoHS Directive 2011/65/EU as last update by 2015/863/EU REACH Regulation (EC) n°1907/2006
Communication interface	RS232 serial connection (not insulated), Atos protocol with ASCII coding (see section 9)
Recommended wiring cable	LiYCY shielded cables: 0,5 mm² for length up to 40 m [1,5 mm² for power supply and solenoids]
Max conductor size (see section 12)	2,5 mm²

4 POWER SUPPLY AND SIGNALS SPECIFICATIONS

4.1 Power supply

The power supply must be appropriately stabilized or rectified and filtered: apply at least a 10000 μF/40 V capacitance to single phase rectifiers or a 4700 μF/40 V capacitance to three phase rectifiers.

⚠ A safety fuse is required in series to each power supply: 2,5 A time lag fuse for 01H single solenoid valve and 05H double solenoid valve
5 A time lag fuse for 05H two single solenoid valves

Option /12

This driver execution is designed to receive a 12 VDC power supply and it is commonly used in mobile application.
A safety fuse is required in series to each driver power supply:

⚠ A safety fuse is required in series to each power supply: 4 A time lag fuse for 01H single solenoid valve and 05H double solenoid valve
6,3 A time lag fuse for 05H two single solenoid valves

4.2 Reference Input Signals (pin B1 and B3, both referred to pin B2)

The driver proportionally transforms the external reference input signal into the current supplied to the solenoid.
The driver is designed to receive one (01H) or two (05H) analog reference inputs (CMD1 on pin B1, CMD2 on pin B3); both signals are referred to a common electric ground (CMD- on pin B2). CMD1 has to be used in case of 05H version that drives one double solenoid valve. CMD2 has to be used in case of 05H version that drives two single solenoid valves or transducer input for /W option (see 4.3).
The input range is software selectable among voltage (0 ÷ ±10 VDC) or current (4 ÷ 20 mA with cable break detection or 0 ÷ ±20 mA).
Defaults for standard: 0 ÷ 10 VDC for two position valves; 0 ÷ ±10 VDC for three position valves (see valve's tech. table).
Default for /I option: 4 ÷ 20 mA (see valve's tech. table)
Other ranges can be set by software. Internal reference generation is software selectable (see 7.6).
Note: software selection of analog input range (voltage or current) is applied to both signals CMD1 and CMD2.

4.3 Pressure Input Signal (pin B3 referred to pin B2) only for, /W option)

When hydraulic power limitation is active (see 7.7), input signal CMD2 must be connected to an external pressure transducer installed on the hydraulic system; maximum input range 0 ÷ 10 VDC.

4.4 Output supply Signal for external reference potentiometers (/P option)

The reference analog signals can be generated by one (01H) or two (05H) external potentiometers directly connected to the driver, using the ±5 VDC supply output available at pin C3 and C4. Reference input signal can be set up via software to ±5 VDC, in order to match potentiometer output signal.

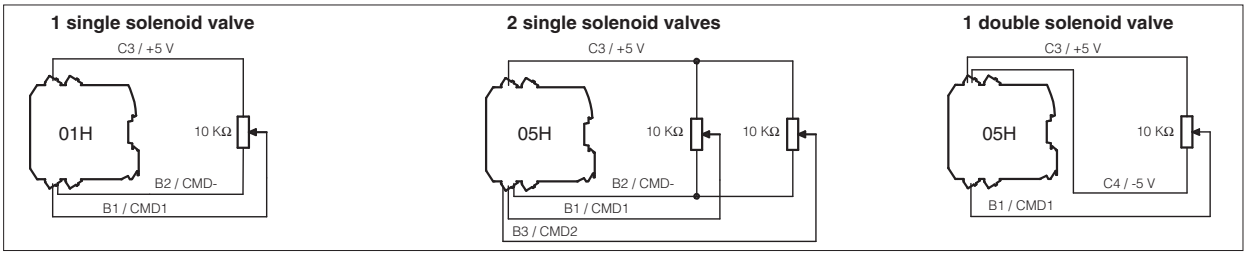

4.5 Enable Input Signal (pin D3 referred to pin D2)

Enable input signal allows to enable/disable the current supply to the solenoids, without removing the electrical power supply to the driver; it is used to maintain active the serial connection and the other driver functions when the valve must be disabled for safety reasons.
To enable the driver, supply a 24 VDC for standard or 12 VDC for option /12 on pin D3 referred to pin D2.

4.6 Status Output Signal (pin D4 referred to pin D2)

Status output signal indicates fault conditions of the driver (short circuits, solenoids not connected, cable broken for 4 ÷ 20mA input) and is not affected by Enable input signal status: fault presence corresponds to 0 VDC, normal working corresponds to 24 VDC for standard or 12 VDC for option /12. When hydraulic power limitation function is active (see 7.7), status output signal can be software configured to indicate power limitation status: not active (0 VDC) or active (24 VDC for standard or 12 VDC for option /12).

4.7 ON/OFF Input Signals (pin C1...C4 referred to DGND pin B4)

Analog Drivers Compatibility - **default** for series 12 or higher

The four ON/OFF digital input signals (DI) can be used to activate compatibility functionalities with E-BM-AC and E-ME-AC analog drivers (see section 5). If digital inputs are not connected, the driver behavior corresponds to an E-BM-AS series 11 or lower

or

Internal Reference Generation - software selectable

When the driver is configured in internal reference generation mode (see 7.6), the 4 ON/OFF input signals (DI) are used to select the active reference signal, among the available stored values. If the 4 ON/OFF input signals (DI) are not active, the driver can be commanded by external analog reference. The polarity of the digital inputs can be customized: default active status = 24 VDC (standard) or 12 VDC (option /12).

Note: for /P option DI3 and DI4 are not available

4.8 Possible combined options:

/12W, **/12PW**, **/12CIW**, **/AW**, **/ACIW**, **/APW**, **/CIW**, **/PW** only for 05H
/12I, **/12P**, **/AI**, **/AP** for 01H and 05H

5 ANALOG DRIVERS COMPATIBILITY - only for E-BM-AS series 12 or higher

E-BM-AS digital inputs (DI1..DI4) activate compatibility functionalities with E-BM-AC and E-ME-AC analog drivers:

REFERENCE COMPATIBILITY

Digital Inputs Signals		Digital driver	Analog driver	24 VDC to DI1 **(1)**	0 VDC to DI1
DI1	24 VDC **(1)**	E-BM-AS 01H E-BM-AS 05H	E-BM-AC 01F E-BM-AC 05F E-BM-AC 011F E-ME-AC 01F E-ME-AC 05F	01H Voltage 0 ÷ 5 VDC / 0 ÷ 100% Current 4 ÷ 20 mA / 0 ÷ 100% 05H Voltage ± 5 VDC / ± 100% Current 4 ÷ 20 mA / 0 ÷ 100%	See section 4.2
DI2	0 VDC				
DI3	0 VDC				
DI4	0 VDC				

Notes: set 0 VDC to DI1 and power-off/on the driver to restore latest settings; **(1)** 12 VDC for option/12

REFERENCE INVERSION

Digital Inputs Signals		Digital driver	Analog driver	24 VDC to DI2 **(1)**	0 VDC to DI2
DI1	24 VDC **(1)**	E-BM-AS 05H	E-ME-AC 05F	Voltage 0 ÷ 5 VDC / 0 ÷ -100% Current 4 ÷ 20 mA / 0 ÷ -100%	Voltage 0 ÷ 5 VDC / 0 ÷ 100% Current 4 ÷ 20 mA / 0 ÷ 100%
DI2	24 VDC **(1)**				
DI3	0 VDC				
DI4	0 VDC				

Notes: to enable reference inversion, set 24 VDC (standard) or 12 VDC (option /12) to DI1 before driver power-on; **(1)** 12 VDC for option /12

RAMP SWITCH OFF

Digital Inputs Signals		Digital driver	Analog driver	24 VDC to DI3 **(1)**	0 VDC to DI3
DI1	24 VDC **(1)**	E-BM-AS 01H E-BM-AS 05H	E-ME-AC 01F E-ME-AC 05F	Ramp excluded	Ramp activated
DI2	0 VDC				
DI3	24 VDC **(1)**				
DI4	0 VDC				

Notes: to enable ramp switch off, set 24 VDC (standard) or 12 VDC (option /12) to DI1 before driver power-on; DI3 not available for /P option; **(1)** 12 VDC for option/12

011F CONFIGURATION

Digital Inputs Signals		Digital driver	Analog driver	24 VDC to DI4 **(1)**	0 VDC to DI4
DI1	(*)	E-BM-AS 05H	E-BM-AC 011F	Driver configuration 011F (*) = don't care	Driver configuration 05H (*) = don't care
DI2	(*)				
DI3	(*)				
DI4	24 VDC **(1)**				

Notes: set 0 VDC to DI4 and power-off/on the driver to restore latest settings; DI4 not available for /P option; **(1)** 12 VDC for option/12

6 VALVE SETTINGS AND PROGRAMMING TOOLS - see tech. table **GS500**

Free downloadable software for PC allows to set all valve functional parameters and to access complete diagnostic information of digital drivers via RS232 service port.
Atos E-SW-SETUP PC software supports all Atos digital valve drivers and it is available at www.atos.com in MyAtos area.

WARNING: drivers RS232 port is not isolated!

RS232 connection

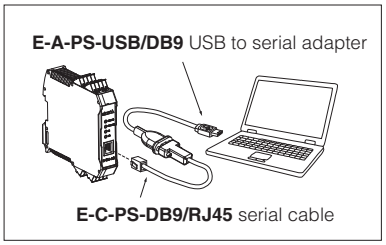

7 MAIN SOFTWARE PARAMETER SETTINGS

The following is a brief description of the main settings and features of digital drivers. For a detailed descriptions of available settings, wirings and installation procedures, please refer to the user manual included in the E-SW-SETUP programming software:

E-MAN-BM-AS - user manual for **E-BM-AS**

7.1 Scale

Scale function allows to set the maximum current supplied to the solenoid, corresponding to the max valve regulation, at maximum reference signal value.
This regulation allows to adapt the maximum current supplied from the driver to the specific nominal current of the proportional valves to which the driver is coupled; it is also useful to reduce the maximum valve regulation in front of maximum reference signal.
For double solenoid valves two different Scale regulations are available:
ScaleA for positive reference signal and ScaleB for negative reference signal

7.2 Bias and Threshold

Proportional valves may be provided with a dead band in the hydraulic regulation corresponding to their switch-off status.
This dead band discontinuity in the valve's regulation can be compensated by activating the Bias function, which adds a fixed preset Bias value to the reference signal (external input or internally generated).
The Bias function is activated when the reference signal overcome the Threshold value, preset into the driver.
The Bias setting allows to calibrate the Bias current supplied to the solenoid of the specific proportional valve to which the driver is coupled.
The Threshold setting is useful to avoid undesired valve regulation at zero reference signal when electric noise is present on the analog input signal: smaller threshold reduces the reference signal dead band, greater values are less affected by electric noise presence.
If internal reference generation is active (see 7.6), threshold should be set to 0.
For double solenoid valves two different Bias regulations are available: positive reference signal activates BiasA for solenoid S1 and negative reference signal activates BiasB for solenoid S2

7.3 Ramps

The ramp generator allows to convert sudden change of electronic reference signal into smooth time-dependent increasing/decreasing of the current supplied to the solenoid.
Different ramp mode can be set:
- single ramp for any reference variation
- two ramps for increasing and for decreasing reference variations
- four ramps for positive/negative signal values and increasing/decreasing reference variations

Ramp generator is useful for application where smooth hydraulic actuation is necessary to avoid machine vibration and shocks.
If the proportional valve is driven by a closed loop controller, the ramps can lead to unstable behaviour, for these applications ramp function can be software disabled (default setting)

7.4 Dither

The dither is an high frequency modulation of the current supplied to the solenoid, to reduce the hysteresis of the valve's regulation: a small vibration in the valve's regulating parts considerably reduces static friction effects.
Dither frequency can be set in a range from 80 to 500 Hz (default value is 200Hz).
Lower dither setting reduces the hysteresis but also reduces the regulation stability. In some application this can lead to vibration and noise: right setting usually depends on system setup.
Default dither is a valid setting for a wide range of hydraulic applications

7.5 Linearization

Linearization function allows to set the relation between the reference input signal and the current supplied to the solenoid.
Linearization is useful for applications where it is required to linearize the valve's regulation in a defined working condition (e.g. maximum pressure control at defined working flow)

7.6 Internal Reference Generation

Internal generation of reference values is software selectable.
In this mode the 4 digital inputs of the driver (DI1..DI4) allow to activate the desired internal reference signal, among the different driver's stored values: external control unit can thus manage complex machine profile by simple switching the reference signal, by 4 digital inputs (see 4.7).
The digital inputs are software configurable into 2 different reference selection mode:

- *Standard mode*
  each digital input corresponds to a different value; up to 4 different internal values are available (2+2 with E-BM-AS-PS-05H driving two single solenoid valves)
- *Binary mode*
  each digital input combination corresponds to a different value; up to 15 different internal values are available (3+3 with E-BM-AS-PS-05H when driving two single solenoid valves)

A dedicated ramp time value can be set by software for each available stored reference value.
Note: with all input signals (DI) set to zero, the driver can be commanded by external analog reference also if internal reference generation is selected (for more information please refer to the programming manual E-MAN-BM-AS).

7.1, 7.2 - Scale, Bias & Threshold

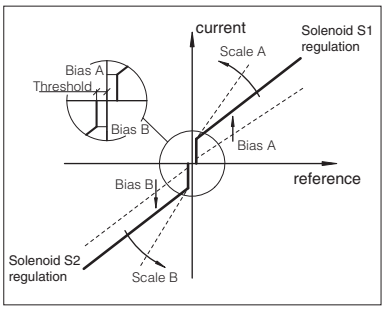

7.3 - Ramps

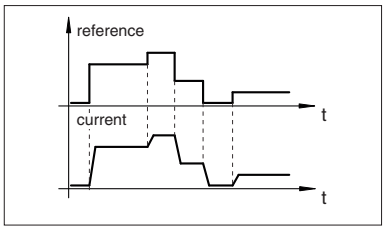

7.4 - Dither

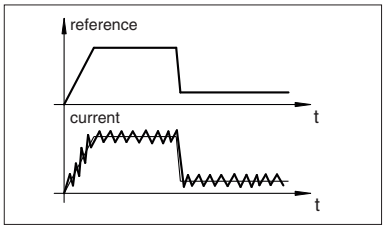

7.5 - Linearization

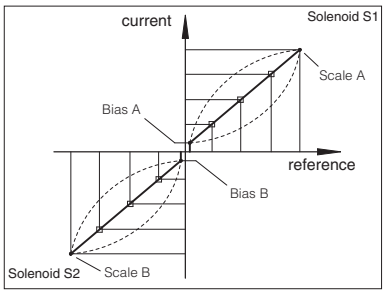

7.6 - Internal Reference Generation

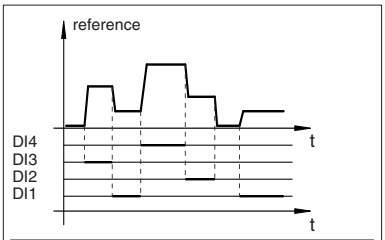

Single internal generator selection (standard mode)				
DI1	**DI2**	**DI3**	**DI4**	**Reference**
OFF	OFF	OFF	OFF	External
ON	OFF	OFF	OFF	Generation 1
(*)	ON	OFF	OFF	Generation 2
(*)	(*)	ON	OFF	Generation 3
(*)	(*)	(*)	ON	Generation 4

Double internal generator selection (standard mode)					
DI1	**DI2**	**S1**	**DI3**	**DI4**	**S2**
OFF	OFF	External	OFF	OFF	External
ON	OFF	Generation 1	ON	OFF	Generation 1
(*)	ON	Generation 2	(*)	ON	Generation 2

(*) don't care

7.7 Hydraulic Power Limitation (**/W option**, only for drivers E-BM-AS-PS-05H)

E-BM-AS drivers with /W option electronically perform hydraulic power limitation on:

- direct and pilot operated flow control valves
- direct and pilot operated directional control valves + mechanical pressure compensator
- variable displacement pumps with proportional flow regulator (e.g. PVPC-*-LQZ, tech. table AS170)

The driver receives the flow reference signal by the analog external input CMD1 (see 4.2) or by the internal generator (see 7.6) and a pressure transducer, installed in the hydraulic system, has to be connected to the driver's analog input CMD2.

When the actual requested hydraulic power **p**x**Q** (CMD2xCMD1) reaches the max power limit (p1xQ1), internally set by software, the driver automatically reduces the flow regulation of the valve. The higher is the pressure feedback the lower is the valve's regulated flow:

$$\text{Flow regulation} = \text{Min}\left(\frac{\text{PowerLimit [sw setting]}}{\text{Transducer Pressure [CMD2]}}\ ;\ \text{Flow Reference [CMD1]}\right)$$

7.7 - Hydraulic Power Limitation

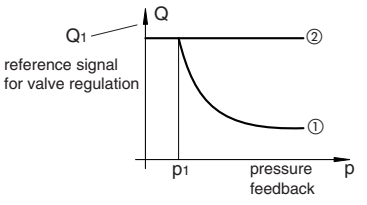

Regulation curve ① with and ② without power limitation.
p1 x Q1 = max power limit

8 CONNECTIONS

The 4 fast plug-in connectors (A,B,C,D), included in the supply, provide simple wirings, easy driver's replacement and the possibility to test the signals directly on the connectors.

CONNECTOR	PIN	SIGNAL	TECHNICAL SPECIFICATIONS		NOTES	
A	A1	SOL S1	Current to solenoid S1		Output - power PWM	
	A2					
	A3	SOL S2	Current to solenoid S2 (only for 05H version)			
	A4					
B	B1	CMD1	Reference analog input: ±10 VDC / ± 20 mA maximum range software selectable (see 4.2)		Input - analog signal	
	B2	CMD-	Standard	/P option (see 4.4)		
			Zero signal, ground for reference signals	Reference for ±5 VDC output (AGND)		
	B3	CMD2 **(1)**	Reference analog input: ±10 VDC / ± 20 mA maximum range software selectable (see 4.2)			
	B4	DGND	Optical insulated ground for on/off inputs (DI1 ÷ DI4)			
C			Standard	/P option (see 4.4)	Standard	Option /P
	C1	DI1	Optical insulated on/off input 0 ÷ 24 VDC **(2)** referred to pin B4 DGND (see 4.7) For analog driver compatibility see section 5	Optical insulated on/off input 0 ÷ 24 VDC **(2)** referred to pin B4 DGND (see 4.7) For analog driver compatibility see section 5	Input - on/off signal	
	C2	DI2				
	C3	DI3		+5 VDC @ 10 mA output supply to pin B2 (AGND)	Input - on/off	Output - reference analog
	C4	DI4		-5 VDC @ 10 mA output supply to pin B2 (AGND)		
D	D1	V+	Power supply 24 VDC for standard or 12 VDC for option /12 (see 4.1)		Input - power supply	
	D2	V0	Power supply 0 VDC			
	D3	ENABLE	Enable (24 VDC for standard or 12 VDC for option /12) or disable (0 VDC) the driver (see 4.5)		Input - on/off signal	
	D4	STATUS	Fault (default) or software selected output (see 4.6)		Output - on/off signal	

(1) Only for 05H version, when used to drive two single solenoid valves or transducer input for /W option; **(2)** 0 ÷ 12 VDC for option/12
WARNING: if CMD2 is not used has to be connect to CMD- (ground)

9 RJ45 CONNECTOR

RJ45 CONNECTOR		
PIN	SIGNAL	DESCRIPTION
1	/	Not connected
2	/	Not connected
3	/	Not connected
4	GND	Signal zero data line
5	RX	Driver receiving data line
6	TX	Driver transmitting data line
7	/	Not connected
8	/	Not connected

RJ45 connector
(IEC 60603 standard)
for RS232 serial communication

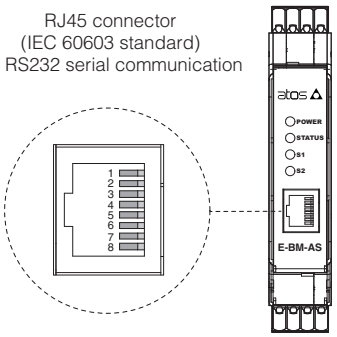

10 DIAGNOSTIC LEDS

Four leds show driver operative conditions for immediate basic diagnostics. Please refer to the driver user manual for detailed information.

LED	COLOR	FUNCTION	FLASH RATE	DESCRIPTION
L1	GREEN	POWER	OFF	Power supply OFF
			ON	Power supply ON
L2	GREEN	STATUS	OFF or ON	Fault conditions
			Slow blinking	Driver disabled
			Fast blinking	Driver enabled
L3 and L4	YELLOW	S1 and S2	OFF	PWM command OFF
			ON	PWM command ON
			Slow blinking	Coil not connected
			Fast blinking	Short circuit on the solenoid

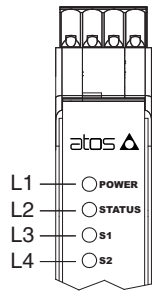

11 OVERALL DIMENSIONS [mm]

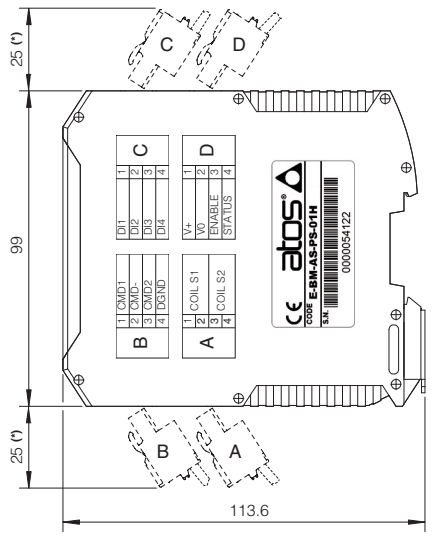

DIN rail dimensions

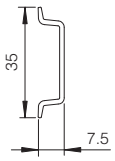

overall dimension with assembled connectors

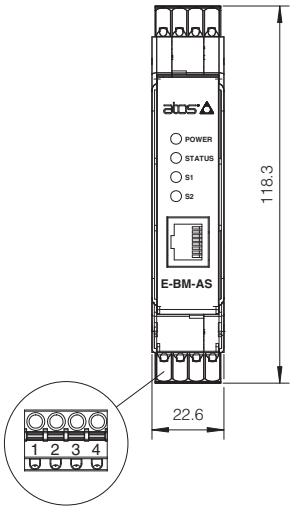

A, B, C, D connectors included

(*) Space to remove the connectors

12 INSTALLATION

To wire cables in the connectors:
1. press the button with a screwdriver
2. insert the cable termination

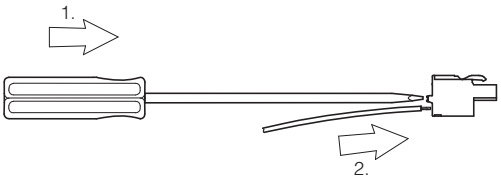

Note: max conductor size: 2,5 mm²

To unlock the driver from the DIN rail:
1. pull down the locking slide with a screwdriver
2. rotate up the driver

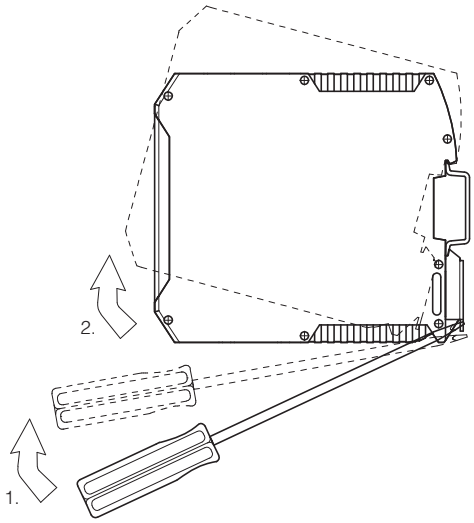

Digital electronic E-MI-AS-IR drivers

DIN 43650 plug-in format, for proportional valves without transducer

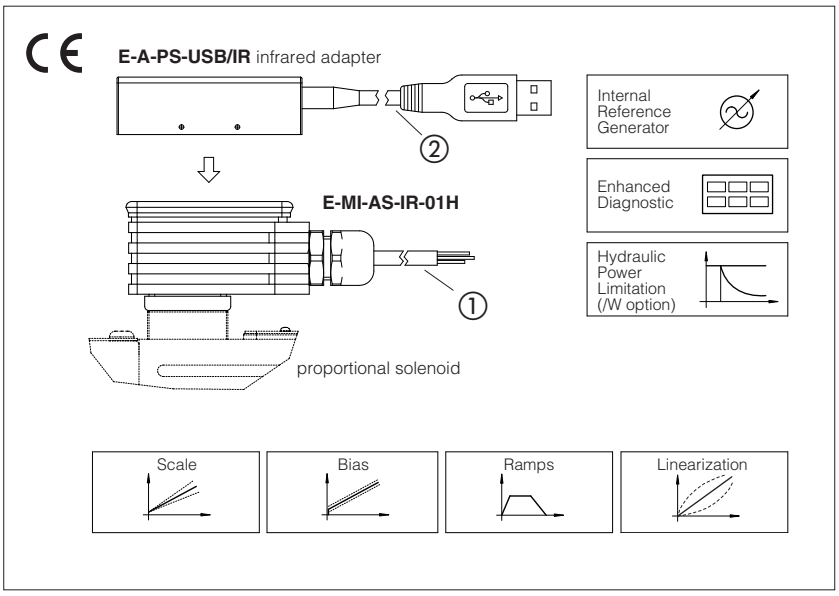

E-MI-AS-IR

Digital drivers are designed for mounting on the solenoid's DIN connector of proportional valves without transducer. They supply and control the current to the solenoid according to the electronic reference input signal. The solenoid proportionally transforms the current into a force, acting on the valve spool or poppet, against a reacting spring, thus providing the valve's hydraulic regulation.
E-MI-AS drivers can drive single or double solenoid proportional valve.

Electrical Features:

- Standard 5m cable connection ① or M12 connector (/M12 option)
- Infrared communication interface ② to program the driver with Atos PC software
- 2 leds for diagnostics (see 9)
- +5 VDC output supply for external reference potentiometer (not available for /M12 option)
- Operating temperature range: -20° ÷ +50°
- Current reference input (/I option)
- Plastic box with IP65 protection degree and standard DIN43650 plug-in format with double earth connection to allow double-side orientation
- CE mark according to EMC directive

Software Features:

- Intuitive graphic interface
- Setting of valve's functional parameters: bias, scale, ramps, dither
- Linearization function for the hydraulic regulation
- 2 selectable modes for electronic reference signal: external analog input or internal generation
- /W option max power limitation function (see 6.7)
- Complete diagnostics of driver status

1 MODEL CODE

E-MI - **A** **S** - **IR** - **01H** / ***** *****

E-MI: On-board driver, DIN 43650 plug-in format

A = driver for valves without transducer

S = digital execution

IR = Serial infrared communication interface

01H = for single solenoid proportional valves

***** (Series number)

Options, see section 4 **:**

- **-** = standard version (with 5 m cable)
- **I** = current reference input
- **M12** = with 5 poles M12 connector **(1)**
- **W** = power limitation function (see 6.7)

(1) ZH-5P female connector must be ordered separately

2 BLOCK DIAGRAM

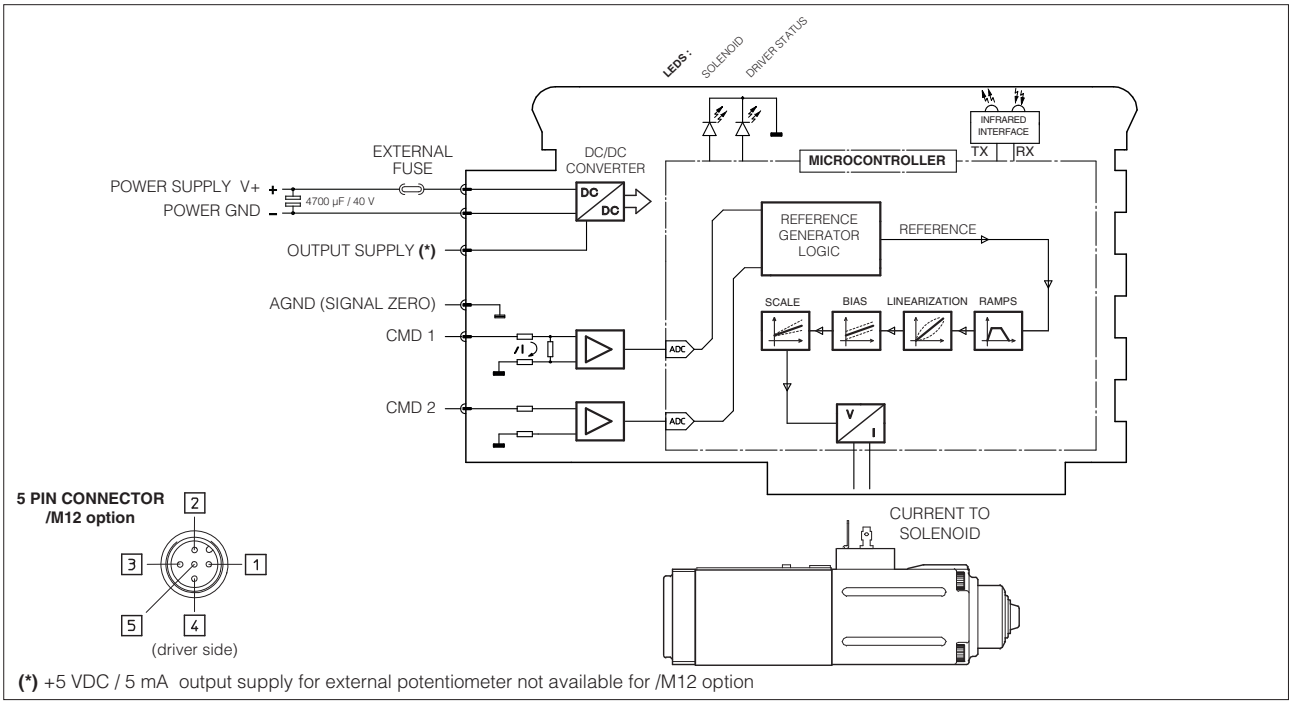

(*) +5 VDC / 5 mA output supply for external potentiometer not available for /M12 option

3 MAIN CHARACTERISTICS

Power supply (see 4.1)	Nominal: +24 VDC Nominal: +12 VDC	Rectified and filtered: VRMS = 20 ÷ 27 VMAX (ripple max 10 % VPP) Rectified and filtered: VRMS = 10 ÷ 14 VMAX (ripple max 10 % VPP)			
Max power consumption	50 W				
Current supplied to solenoids	IMAX = 2.7 A with +24 VDC power supply to drive standard proportional valves (3,2 Ω solenoid) IMAX = 3.3 A with +12 VDC power supply to drive proportional valves with /6 option (2,1 Ω solenoid)				
Reference input signal **(1)** (CMD1 - see 4.2)	Standard (voltage) **/I option** (current)	Input range: Input range:	0 ÷ 10 VDC 4 ÷ 20 mA / 0 ÷ 20 mA	Input impedance: Input impedance:	Ri > 50 kΩ Ri = 500 Ω
Enble Input Signal (CMD2 - see 4.5) ON/OFF Input Signal (CMD1,CMD2 - see 4.6)		Input range: Input impedance:	0 ÷ 24 VDC (OFF state: 0 ÷ 5 VDC; ON state: 9 ÷ 24 VDC) Ri > 10 kΩ		
Pressure transducer input (CMD2 - see 4.3)	**/W option**	Input range:	0 ÷ 10 VDC	Input impedance:	Ri > 50 kΩ
Output supply (see 4.4)	+5 V @ max 5 mA: output supply for external potentiometer (not available for **/M12 option**)				
Alarms	Solenoid coil not connected, short circuit and cable break with current reference signal (**/I option**)				
Format	Plastic box ; IP65 protection degree (when fixed on solenoid); DIN43650 format				
Operating temperature	-20 ÷ +50 °C (storage -25 ÷ +85 °C)				
Mass	Standard version: 450 g; /M12 option: 70 g				
Additional characteristics	Short circuit protection of current output to solenoid				
Compliance	CE according to EMC directive 2014/30/EU (Immunity: EN 61000-6-2; Emission: EN 61000-6-4) RoHS Directive 2011/65/EU as last update by 2015/863/EU REACH Regulation (EC) n°1907/2006				
Communication interface	Infrared, Atos protocol with ASCII coding; E-A-PS-USB/IR adapter is required (see section 5)				
Wiring cable characteristics	2 poles x 0,5 mm^2 plus 4 poles x 0,35 mm^2, external diameter 7,4 mm				

(1) Negative reference input signal not allowed

4 POWER SUPPLY AND SIGNALS SPECIFICATIONS

4.1 Power supply

The power supply must be appropriately stabilized or rectified and filtered: apply at least a 10000 μF/40 V capacitance to single phase rectifiers or a 4700 μF/40 V capacitance to three phase rectifiers.
According to power supply value, a safety fuse is required in series to each driver:
+24 VDC - 2,5 A time lag fuse
+12 VDC - 4 A time lag fuse

4.2 Reference Input Signal (CMD1: yellow/pin 4, referred to AGND: white/pin 3)

The driver proportionally transforms the external reference signal input into the current supplied to the solenoid.
The driver is designed to receive one analog reference input (CMD1 on yellow/pin 4) referred to the analog electric ground (AGND on white/pin3) and with a maximum range of 0 ÷ 10 VDC . Internal reference generation is software selectable (see 6.6).
Option /I (current reference input)
The reference input signal maximum range is software selectable among current 4 ÷ 20 mA (with cable break detection) or 0 ÷ 20 mA.

4.3 Pressure Input Signal (CMD2: blue/pin 5) - only for **/W** option

When hydraulic power limitation is active (see 6.7), enable input (CMD2) is managed as an analog input and has to be connected to an external pressure transducer installed on the hydraulic system; maximum input range 0 ÷ 10 VDC.

4.4 Output supply for external potentiometer - (OUTPUT SUPPLY: green, referred to AGND: white) - not available for **/M12** option

The reference analog signal can be generated by an external potentiometer directly connected to the driver, using the +5VDC supply output available at green wire thus generating the desired reference signal.

4.5 Enable Input Signal (CMD2: blue/pin 5, referred to AGND: white/pin 3)

Enable input signal allows to enable/disable the current supply to the solenoid, without removing the electrical power supply to the driver; it is used to maintain active the infrared connection and the other driver functions when the valve must be disabled for safety reasons.
To enable the driver, supply a 24VDC on CMD2 (blue/pin 5, referred to white/pin 3).
The polarity of the enable input can be customized and the enable function can be deactivated, see table at side.

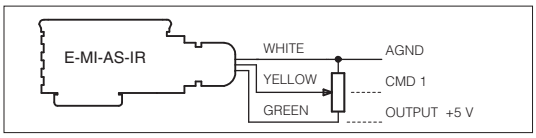

ENABLE CONFIGURATION			
Signal	default polarity	reverse polarity	deactiveted
9 ÷ 24 VDC	solenoid ON	solenoid OFF	solenoid ON
0 ÷ 5 V	solenoid OFF	solenoid ON	solenoid ON

4.6 ON/OFF Input Signals (CMD1: yellow/pin 4, CMD2: blue/pin 5)

When the driver is configured in internal reference generation mode (see 6.6), both reference input (CMD1) and enable input (CMD2) are managed as ON/OFF input signals. In this mode they are used to select the active reference signal, among the available stored values.

4.7 Possible combined options: /IM12, /IM12W, /IW and /M12W

5 VALVE SETTINGS AND PROGRAMMING TOOLS - see tech. table **GS500**

Free downloadable software for PC allows to set all valve functional parameters and to access complete diagnostic information of digital drivers via infrared adapter.
Atos E-SW-SETUP PC software supports all Atos digital valve drivers and it is available at www.atos.com in MyAtos area.

WARNING: drivers USB port is not isolated!

Infrared connection

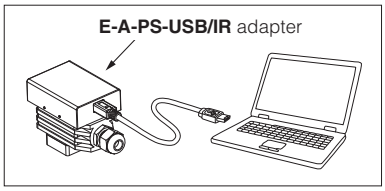

Adapter, to be ordered separately :

E-A-PS-USB/IR = adapter from USB connector (PC communication port) to driver infrared communication interface: plug the adapter on the driver to establish the infrared communication

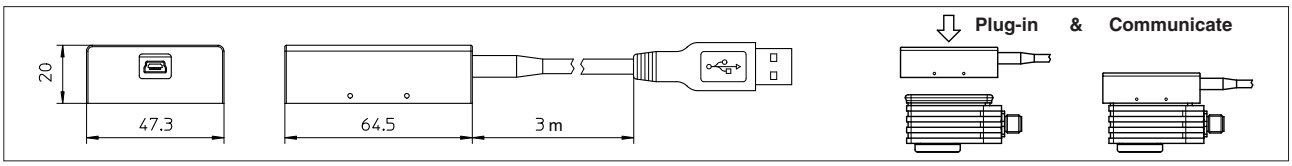

6 MAIN SOFTWARE PARAMETER SETTINGS

The following is a brief description of the main settings and features of digital drivers.
For a detailed descriptions of available settings, wirings and installation procedures, please refer to the user manual included in the E-SW-SETUP programming software:
E-MAN-MI-AS - user manual for **E-MI-AS-IR**

6.1 Scale

Scale function allows to set the maximum current supplied to the solenoid, corresponding to the max valve regulation, at maximum reference signal value.
This regulation allows to adapt the maximum current supplied from the driver to the specific nominal current of the proportional valves to which the driver is coupled; it is also usefull to reduce the maximum valve regulation in front of maximum reference signal.

6.2 Bias and Threshold

Proportional valves may be provided with a dead band in the hydraulic regulation corresponding to their switch-off status.
This dead band discontinuity in the valve's regulation can be compensated by activating the Bias function, which adds a fixed preset Bias value to the reference signal (external input or internally generated).
The Bias function is activated when the reference signal overcome the Threshold value, preset into the driver.
The Bias setting allows to calibrate the Bias current supplied to the solenoid of the specific proportional valve to which the driver is coupled.
The Threshold setting is useful to avoid undesired valve regulation at zero reference signal when electric noise is present on the analog input signal: smaller threshold reduces the reference signal dead band, greater values are less affected by electric noise presence.
If internal reference generation is active (see 6.6), threshold should be set to 0.

6.3 Ramps

The ramp generator allows to convert sudden change of electronic reference signal into smooth time-dependent increasing/decreasing of the current supplied to the solenoid.
Different ramp mode can be set:
- single ramp for any reference variation
- two ramps for increasing and for decreasing reference variations

Ramp generator is useful for application where smooth hydraulic actuation is necessary to avoid machine vibration and shocks.
If the proportional valve is driven by a closed loop controller, the ramps can lead to unstable behaviour, for these applications ramp function can be software disabled (default setting)

6.4 Dither

The dither is an high frequency modulation of the current supplied to the solenoid, to reduce the hysteresis of the valve's regulation: a small vibration in the valve's regulating parts considerably reduces static friction effects.
Dither frequency can be set in a range from 80 to 500 Hz (default value is 200Hz).
Lower dither setting reduces the hysteresis but also reduces the regulation stability. In some application this can lead to vibration and noise: right setting usually depends on system setup.
Default dither is a valid setting for a wide range of hydraulic applications

6.5 Linearization

Linearization function allows to set the relation between the reference input signal and the current supplied to the solenoid.
Linearization is useful for applications where it is required to linearize the valve's regulation in a defined working condition (e.g. maximum pressure control at defined working flow)

6.6 Internal Reference Generation

Internal generation of reference values is software selectable.
In this mode the 2 driver inputs (see 4.6) allow to select the desired solenoid current reference signal, among the different internal stored values: external control unit can thus manage complex machine profile by simple switching of the reference signal, by 2 digital inputs (see 4.6).
Each digital input combination corresponds to a different reference value; up to 4 different internal values are available:

	Internal generated references			
	REF1	REF2	REF3	REF4
CMD1	0	24 VDC	24 VDC	0
CMD2	0	0	24 VDC	24 VDC

A different ramp time value can be set by software for each available stored reference value.

6.7 Hydraulic Power Limitation (/W option)

E-MI-AS drivers with /W option electronically perform hydraulic power limitation on single solenoid valves:

- flow control valves (direct and pilot operated)
- directional control valves (direct and pilot operated) + mechanical pressure compensator
- variable displacement pumps with proportional flow regulator (e.g. PVPC-*-LQZ, tab. AS170)

The driver receives the flow reference signal by the analog external input CMD1 (see 4.2) and a pressure transducer, installed in the hydraulic system, has to be connected to the driver's analog input CMD2 (see 4.3).
When the actual requested hydraulic power **p**x**Q** (CMD2xCMD1) reaches the max power limit (p1xQ1), internally set by software, the driver automatically reduces the flow regulation of the valve. The higher is the pressure transducer feedback the lower is the valve's regulated flow:

$$\text{Flow regulation} = \text{Min}\left(\frac{\text{PowerLimit [sw setting]}}{\text{Transducer Pressure [CMD2]}}; \text{Flow Reference [CMD1]}\right)$$

6.1, 6.2 - Scale, Bias & Threshold

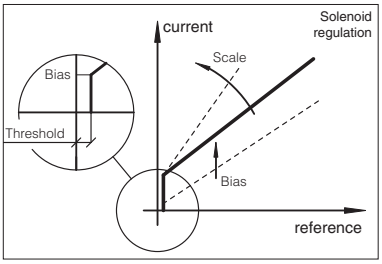

6.3 - Ramps

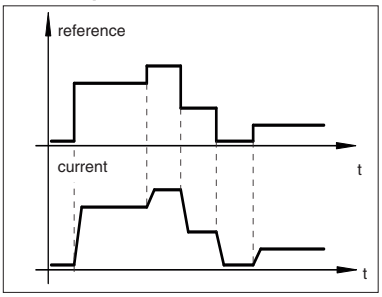

6.4 - Dither

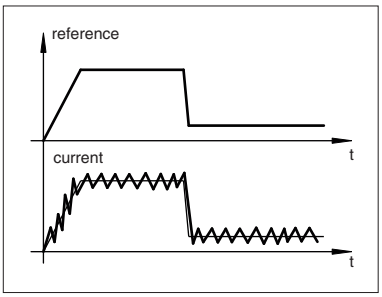

6.5 - Linearization

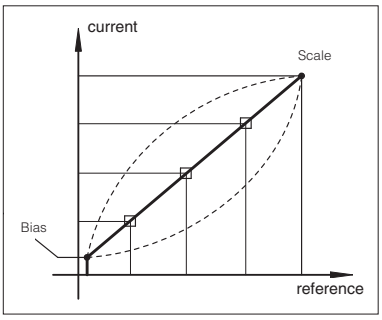

6.6 - Internal Reference Generation

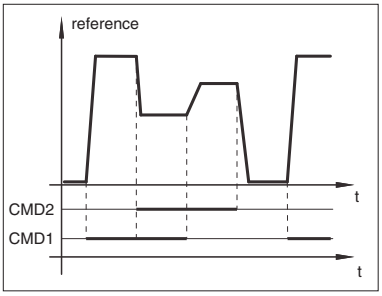

6.7 - Hydraulic Power Limitation

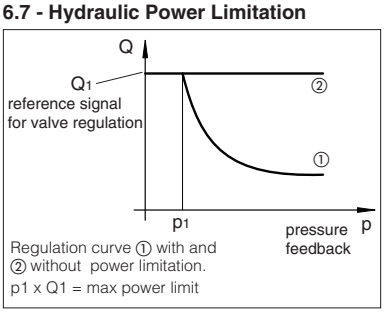

7 CONNECTIONS

Standard cable wire color	/M12 option pin	SIGNAL	TECHNICAL SPECIFICATIONS	NOTES
RED	1	V+	Power supply +24 VDC or +12 VDC (see 4.1)	Input - power supply
BLACK	2	V0	Power supply 0 VDC	
WHITE	3	AGND (Signal zero)	Ground for CMD1,CMD2 and OUTPUT SUPPLY	Input - analog signal
GREEN	N.A.	OUTPUT SUPPLY	+5 VDC @ 5 mA output supply for external potentiometer (not available for option /M12) (see 4.4)	Output - analog signal

The two input signals CMD1 and CMD2 can be managed as analog input or ON/OFF signals; their function depends on the selected software setting:

Standard cable wire color	/M12 option pin	SIGNAL	TECHNICAL SPECIFICATIONS (software setting dependent)			NOTES
			Default (see 4.2 ; 4.5)	Internal Reference Generation (see 4.6 ; 6.6)	Hyraulic Power Limitation (only for /W option - see 4.3 ; 6.7)	
YELLOW	4	CMD 1	Reference analog input: 0 ÷ 10 VDC (4 ÷ 20 mA; 0 ÷ 20 mA for /I option)	ON/OFF: 24 VDC / 0 VDC	Reference analog input: 0 ÷ 10 VDC (4 ÷ 20 mA; 0 ÷ 20 mA for option /I)	Input - analog or digital
BLUE	5	CMD 2	Enable/disable the driver: 24VDC / 0VDC	ON/OFF: 24 VDC / 0 VDC	Pressure transducer input: 0 ÷ 10 VDC	

8 DOUBLE SOLENOID VALVES OPERATION

It is possible to use two E-MI-AS drivers to operate one double solenoid proportional valve supplying the same analog signal to both CMD1 inputs reference. The enable input signal is used to select which driver/solenoid has to be active.

To operate double solenoid valves it is required to:

- parallel wire the two drivers (see following scheme).
- select opposite polarity (default and reverse) for the two enable signals (see 4.5)
- manage from PLC or machine unit: 1 analog reference signal corresponding to desired valve's regulation and 1 ON/OFF signal to select the active solenoid.

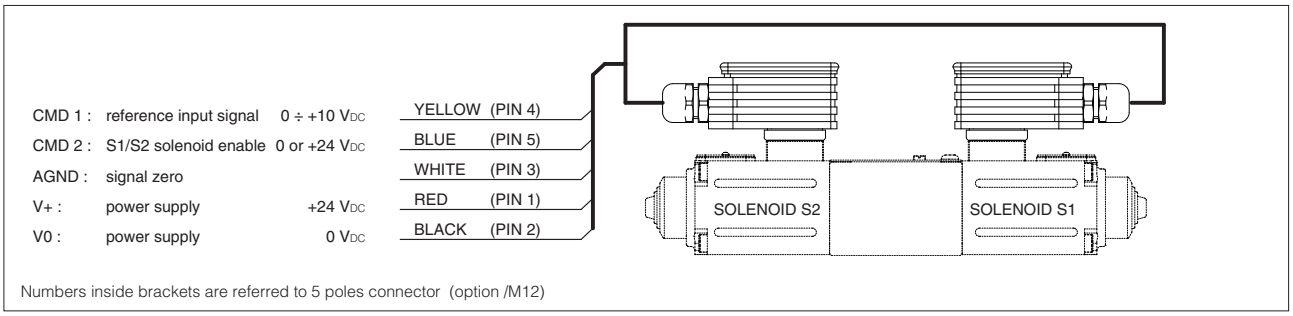

Numbers inside brackets are referred to 5 poles connector (option /M12)

9 DIAGNOSTIC LEDS

It is possible to verify the actual status of solenoid command (yellow LED) and the driver status (green LED).
The following table details the possible displayed conditions:

COIL (YELLOW LED)	
Light signal displayed	Coil status
Light Off	PWM command OFF
Light On	PWM command ON
Slow blinking	Solenoid not connected
Fast blinking	Short circuit on the solenoid
STATUS (GREEN LED)	
Light signal displayed	Driver status
Light Off	Absence of power supply
Light On	Malfunctioning
Slow blinking	Driver disabled or Alarm present
Fast blinking	Driver enabled

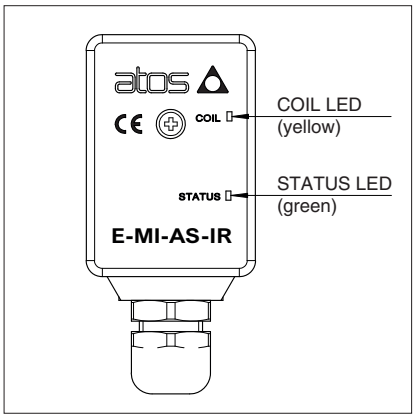

10 OVERALL DIMENSIONS [mm] AND INSTALLATION

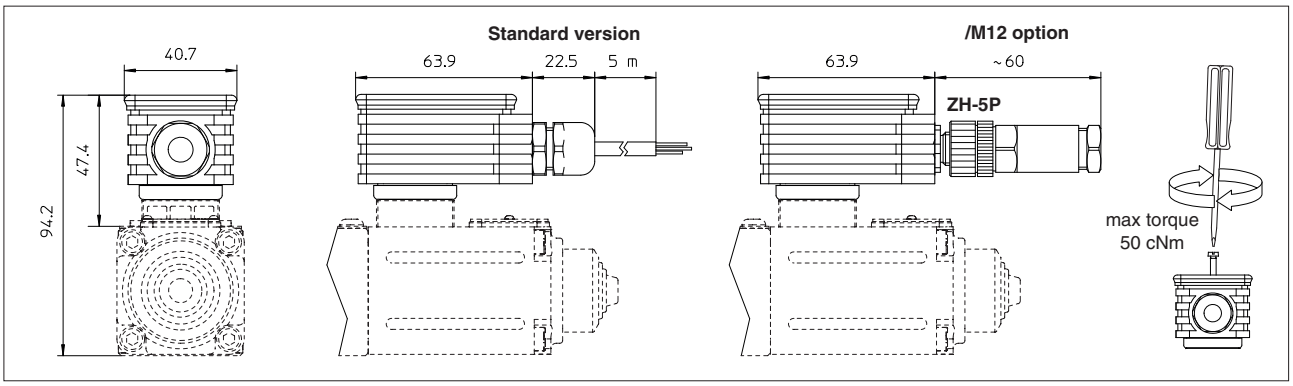

Analog electronic E-MI-AC drivers

DIN 43650 plug-in format, for proportional valves without transducer

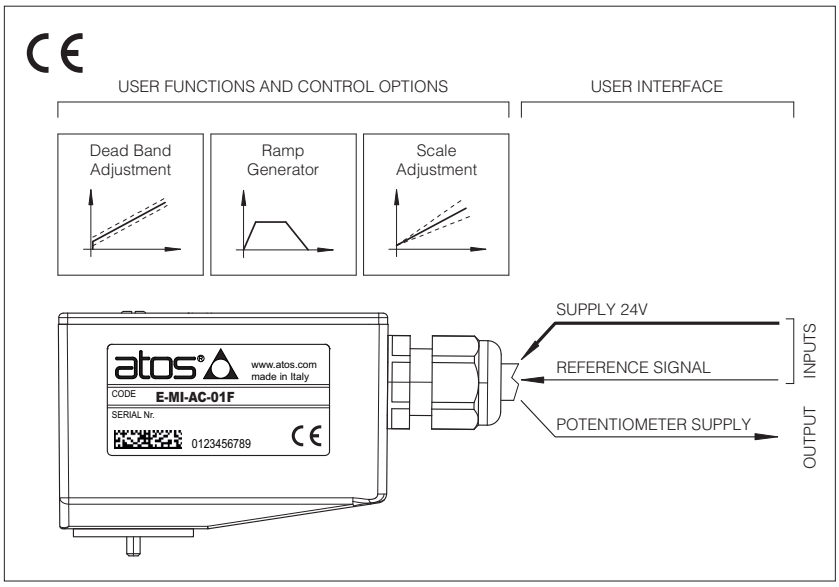

E-MI-AC

Analog drivers control the current to the solenoid of Atos proportional valves without pressure or LVDT position transducer, regulating the spool position, the flow or the pressure according to the electronic reference signal.

Features:

- bias and scale regulations by potentiometers
- symmetrical (standard) or dissymmetrical (/RR option) rising and falling ramp generator
- factory pre-set
- alluminium box with IP65 protection degree
- electronic filters on input and output lines
- CE mark according to EMC directive

Applications:

Pressure, flow, position open or closed-loop systems, according to the block diagram 2.

1 MODEL CODE

E-MI	-	AC	-	01F	/	*	*	/	*

On-board electronic driver DIN 43650 plug-in format

AC = for proportional valve without transducer

01F = for single solenoid proportional valve

Options:

- **-** = standard symmetrical ramps
- **RR** = adjustable dissimmetrical ramps, adjustable dither, suitable also for current signal 0÷20 mA
- **7** = pre arranged for double solenoid valves control

Series number

Set code (see 4.4)

2 BLOCK DIAGRAM

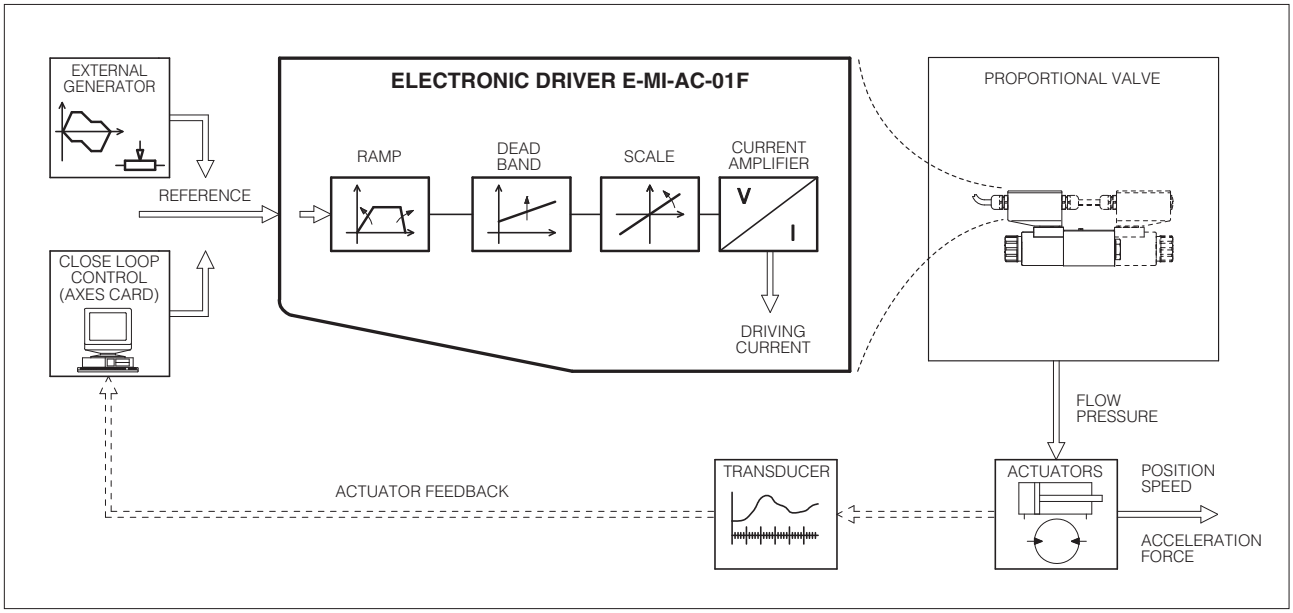

3 MAIN CHARACTERISTICS

Power supply (see 4.1)	Nominal: +24 VDC Rectified and filtered: VRMS = 21 ÷ 33 VMAX (ripple max 10 % VPP) Nominal: +12 VDC Rectified and filtered: VRMS = 10 ÷ 14 VMAX (ripple max 10 % VPP)
Max power consumption	50 W
Current supplied to solenoid	IMAX= 2,7 A type PWM square wave (with solenoid type ZO(R)-A with resistance 3,2 Ω)
Nominal reference signal (factory preset)	0 ÷ 10 VDC
Reference signal variation range (scale adjustment)	0 ÷ 10 VDC (0 ÷ 5 VMIN) – (0 ÷ 20 mA for current signal)
Input signal impedence	Voltage signal Ri > 50 kΩ – (Ri = 250 Ω for current signal)
Potentiometers supply	+5 V / 10 mA at contact 3
Ramp time	10 sec. max (0 ÷ 10 V of reference signal)
Format	Box equipped with DIN 43650-IP65 plug; VDE 0110 wired on solenoid
Operating temperature	0 ÷ +50 °C (storage -20 ÷ +70 °C)
Mass	190 g
Additional characteristics	Outputs to solenoids protected against accidental short circuits
Compliance	CE according to EMC directive 2014/30/EU (Immunity: EN 61000-6-2; Emission: EN 61000-6-4) RoHS Directive 2011/65/EU as last update by 2015/863/EU REACH Regulation (EC) n°1907/2006
Connections	7 contacts – terminal strip
Recommended wiring cable	LiYCY shielded cables: 0,5 mm² up to 1,0 mm² (20 AWG - 18 AWG)

4 GENERAL SPECIFICATIONS

4.1 Power supply and wiring

The power supply must be appropriately stabilized or rectified and filtered. If the power supply is generated by a single phase rectifier use a 10000 µF/40V capacitor; if pulse voltage is generated by a three phase rectifier, connect a 4700 µF capacitor (see 11).

Connect the reference signal to the main electronic control by means of shielded and twisted cables. Pay attention: the negative and the positive poles must not be exchanged each other. Shield the wirings to avoid electromagnetic noise (EMC), connecting the shield to noiseless earth (TE), see 13. It is suitable to keep the driver and its cables far from any electromagnetic radiation source (like cables where high currents flow, electric motors, transformers, relays, solenoids, portable radio-transmitter, etc.).

The 12 VDC electric voltage supply is allowed only after evaluation of the performances required from the proportional valves, and however after check with our technical office.

According to power supply value, a safety fuse is required in series to each driver:
+24 VDC - 2,5 A time lag fuse
+12 VDC - 4 A time lag fuse

4.2 Reference signal, see 5.

The electronic driver is designed to receive a voltage reference signal according to the following options:
- potentiometers mounted externally and wired according to the application diagrams.
- external reference signals generated by PLC, see 11.
- voltage from 0 to 10V
- current from 0 to 20 mA (only with **/RR** option).

4.3 Monitor signal

This voltage output signal allows to measure the current supplied to the coil, read by a voltmeter between the test point M and pin 2 (see 9).
Reading scale is 1 mV = 10 mA (eg.: if the voltage signal is 70 mV, coil current is 700 mA).
To visualize the signals use voltmeters with impedance >10 KΩ.

4.4 Set code

Basic calibration of the electronic driver is factory pre-set, according to the proportional valve it has to be coupled with. These pre-calibrations are identified by a standard number in the model code as follows:

1 = RZGO (KZGO)	2 = RZMO, AG*ZO, LI*ZO
3 = DHZO, DKZOR	4 = DPZO-A-*5
6 = QV*ZO(R)	8 = DHZE, DKZE

4.5 Calibrations available to the user, see 7, 8, 9, 11.

Scale
The relation between driving current and reference signal can be regulated with the Scale adjustment.

Bias (dead band)
Regulation of dead band adjusts the hydraulic zero of the valve (starting position adjustment) to the corresponding electrical zero. The electronic card is factory pre-set for the valve it is coupled with, according to the set code (see section 4.4). An output current is obtained when the input voltage is 100 mV or greater.

Ramps see 7, 9.
The internal ramp generator circuit converts a step input signal into a slowly increasing output signal (solenoid current).
The rise/fall time of the current is set via internal potentiometer P1 up to a max. time of 10 sec. for 0-10V of reference signal. The **/RR** option provides dissimmetrical ramps, ramp up is set via P1 potentiometer and ramp down is set via P2.

Dither
With the **/RR** option the dither frequency adjust is allowed from 100 Hz to 500 Hz.

5 EXTERNAL REFERENCE SIGNALS

EXTERNAL GENERATOR VOLTAGE SIGNAL

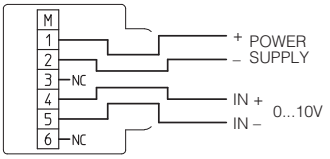

EXTERNAL POTENTIOMETER CONNECTION
POTENTIOMETER

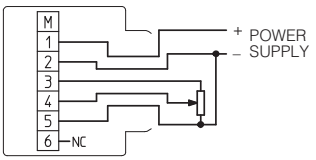

EXTERNAL GENERATOR CURRENT SIGNAL
(**/RR** OPTION)

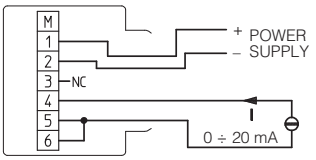

CONNECTION FOR TWO SOLENOIDS
PROPORTIONAL VALVE
(**/7** OPTION, necessary two /7 drivers)

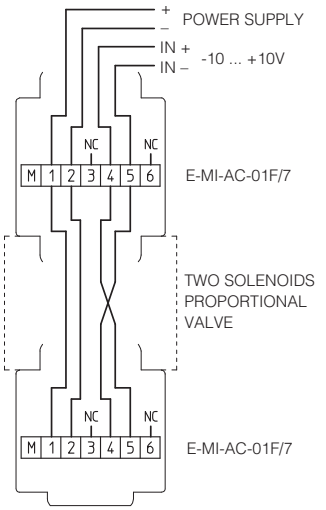

6 INSTALLATION AND START-UP

It is advisable to perform calibration procedures in the order given below:

6.1 Warning

- Never insert or remove the driver while the electronic system is powered on.
- Refer to 9 to identify components mentioned in calibration procedures.
- The E-MI-AC electronic drivers are designed to work in open loop system, where the coupled proportional valve is not required to work at its limits.

6.2 Start-up

Factory pre-set adjustments might not meet the requirements desired for the specific application. Performances can be optimized by on-site re-adjustments of Bias, Scale and Ramps potentiometers, in sequence.

- Remove the cover and connect the electronic driver according to the desired connection diagram, see 5.

For double solenoid valves two electronic drivers type E-MI-AC-01F/7 must be used connected as shown in 5.

Start-up instructions are the same for each driver.

On the first driver two cable clamps must be mounted, one for the external wirings and one to give power and signal to the second driver which is equipped with one cable clamp and one blind plug.

A differential voltage signal -10 V ÷ +10 V must be supplied to the first driver.

Note that the first driver will work with signal from 0 to 10V while the second driver will work with signal from 0 to -10 V.

- The current supplied to the coil can be measured by a voltmeter connected between pins M and 2 of the screw terminal. The reading range will be: I[mA]=10xV[mV] (for example reading 70 mV the current in the coil will be 700 mA).

Bias adjustment (dead band compensation) see 8, 9.

- Supply electrical power to the driver; supply a reference signal voltage = 0,1 VDC. Gradually turn the P4 bias potentiometer until a movement of the controlled actuator is obtained.
- Turn in the opposite direction until the actuator is stopped.

Scale adjustment, see 8, 9.

Supply max. current reference signal; check if the current in the coil reaches the max. value desired, turning P3 clockwise (see the regulation curve of the employed valve used).

Ramps see 7, 9.

Turning the ramp potentiometer clockwise, acceleration and deceleration time can be increased to obtain the optimization of the complete system.

7 RAMPS

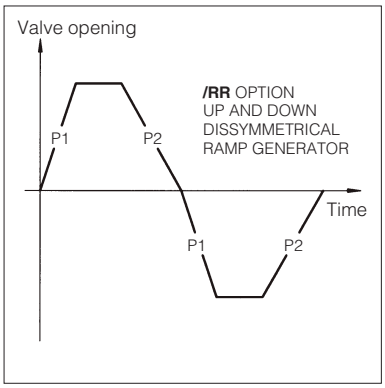

8 BIAS AND SCALE

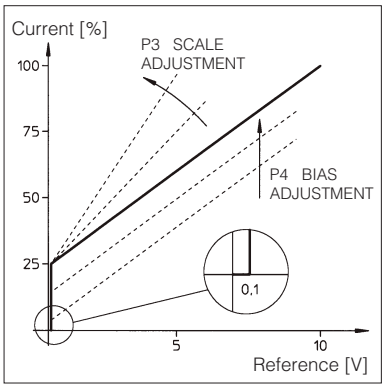

9 REGULATIONS LAYOUT

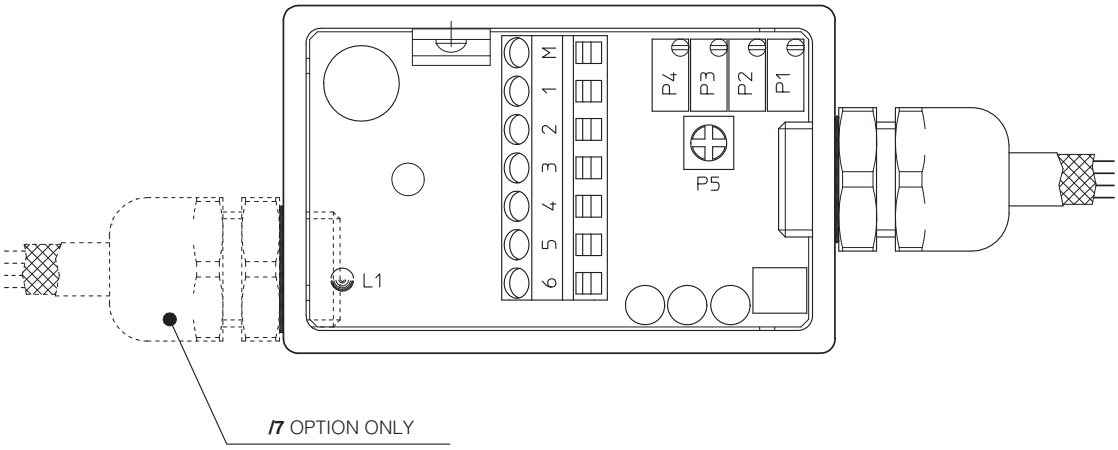

CONNECTIONS

M = Monitor (driving current)
1 = Power V+ } supply 24 VDC
2 = Power GND } supply 24 VDC
3 = Output +5VDC (10mA)
4 = Reference signal input +
5 = Reference signal input –
6 = Connect to contact 5 for current signal (**/RR** option only)

ADJUSTMENTS

P1 = Ramp up
P2 = Ramp down (**/RR** option only)
P3 = Scale
P4 = Bias
P5 = Dither (**/RR** option only)
L1 = Channel enabled led

10 IMPORTANT INSTRUCTIONS

ELETTROMAGNETIC COMPATIBILITY
Atos electronic drivers and proportional valves are designed according to the 2014/30/UE Directive (Electromagnetic Compatibility) and according to EN 50081-2 (Emission) and EN 50082-2 (Immunity) standards. The electromagnetic compatibility of electronic drivers is valid only for wirings realized according to the typical electric connections shown in this technical table.
The device must be verified on the machine because the magnetic field may be different from the test conditions.
SAFETY
The electrical signals (for example reference signals, feedback and enable signal) of electronic drivers must not be used to realize safety conditions of the machine. This is in accordance with the provisions of European directives (Safety requirements of fluid technology systems and components-hydraulics, EN 982). Special attention must be payed to switch-on/switch-off of electronic drivers because they could produce uncontrolled movements of actuators operated by the proportional valves.

11 WIRING BLOCK DIAGRAM

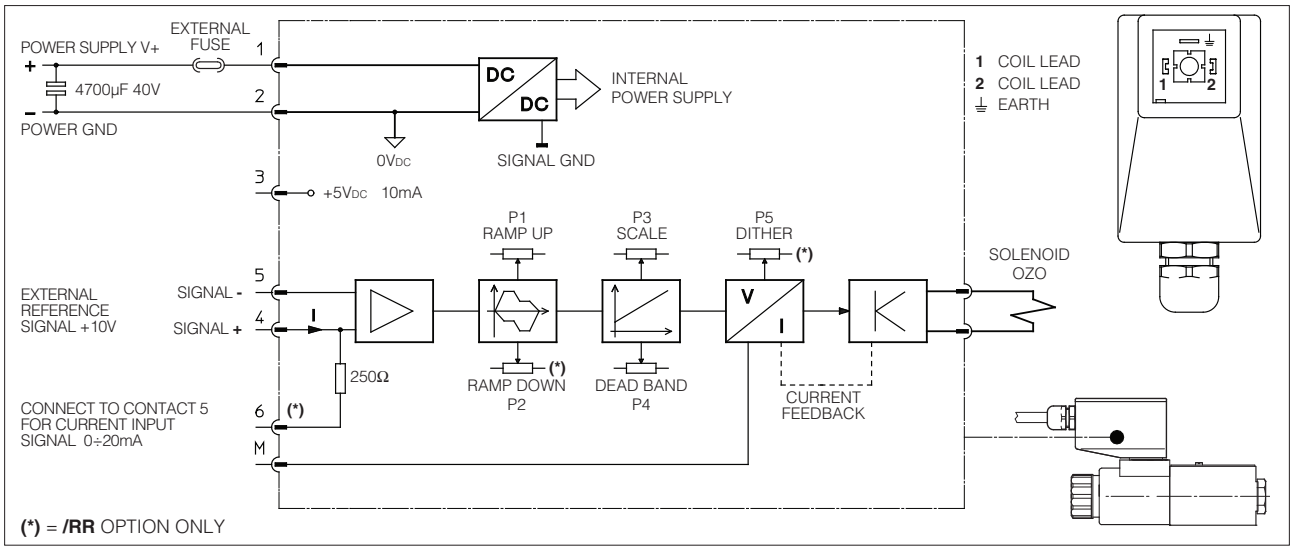

12 OVERALL DIMENSIONS [mm]

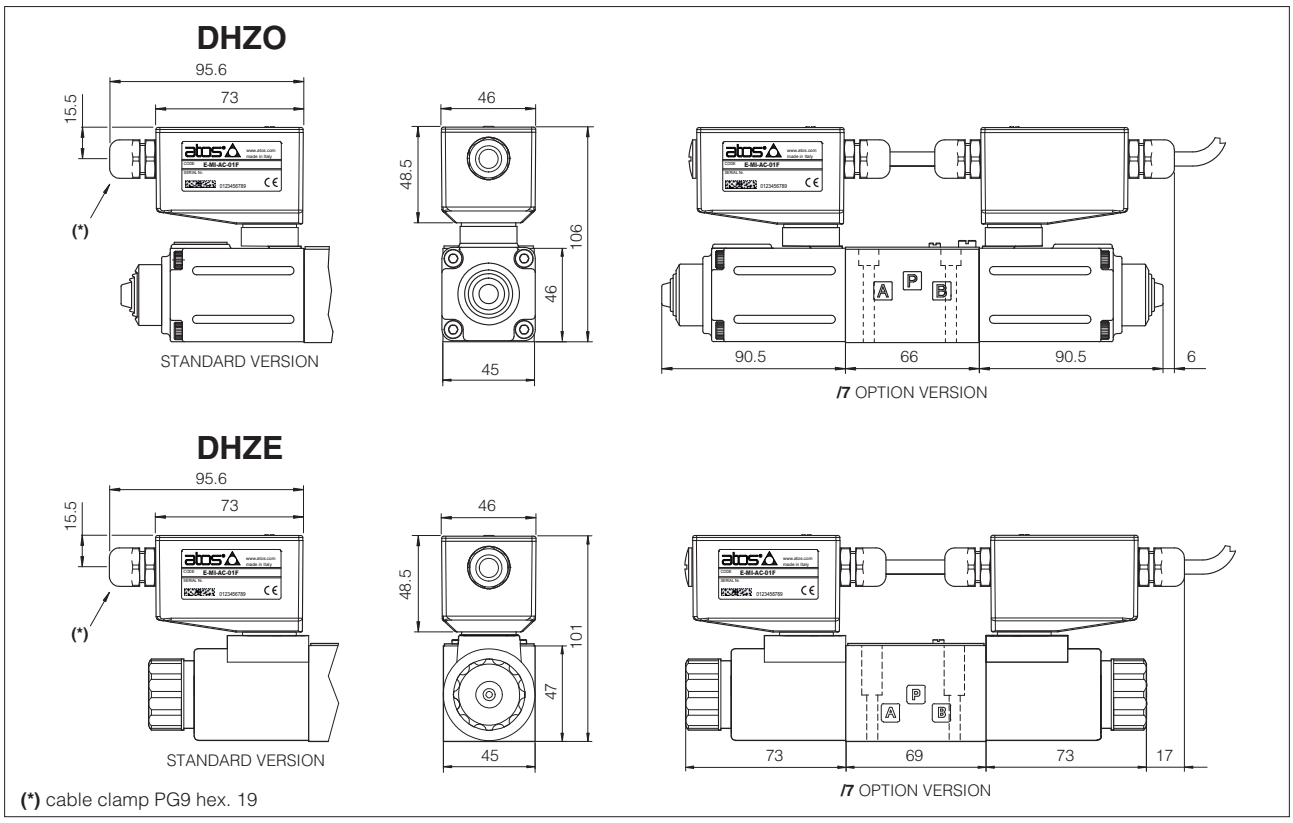

13 EARTH CONNECTIONS

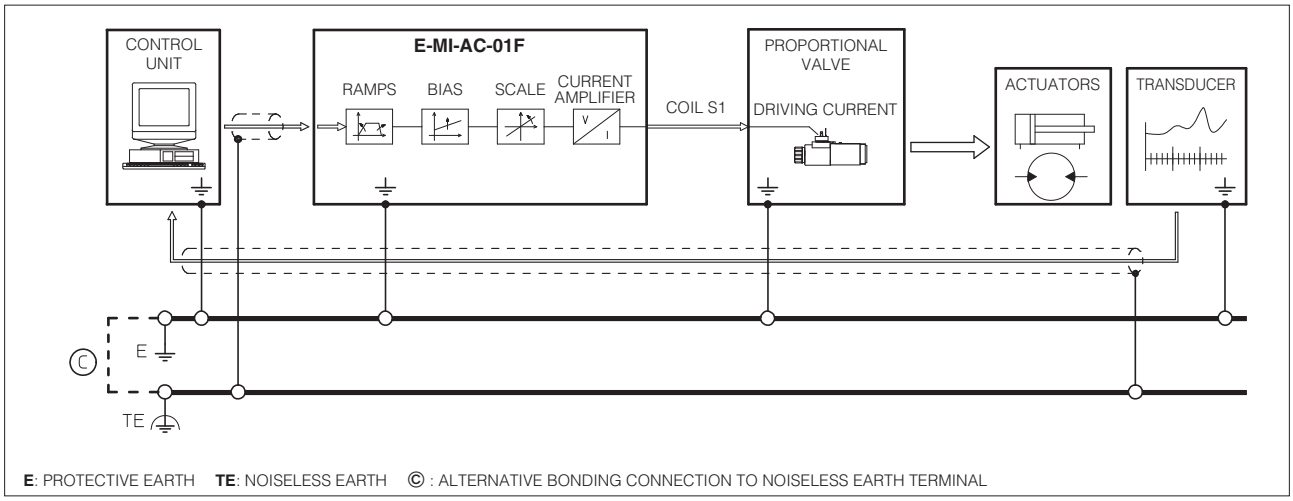

2 AXIS & p/Q CONTROLS

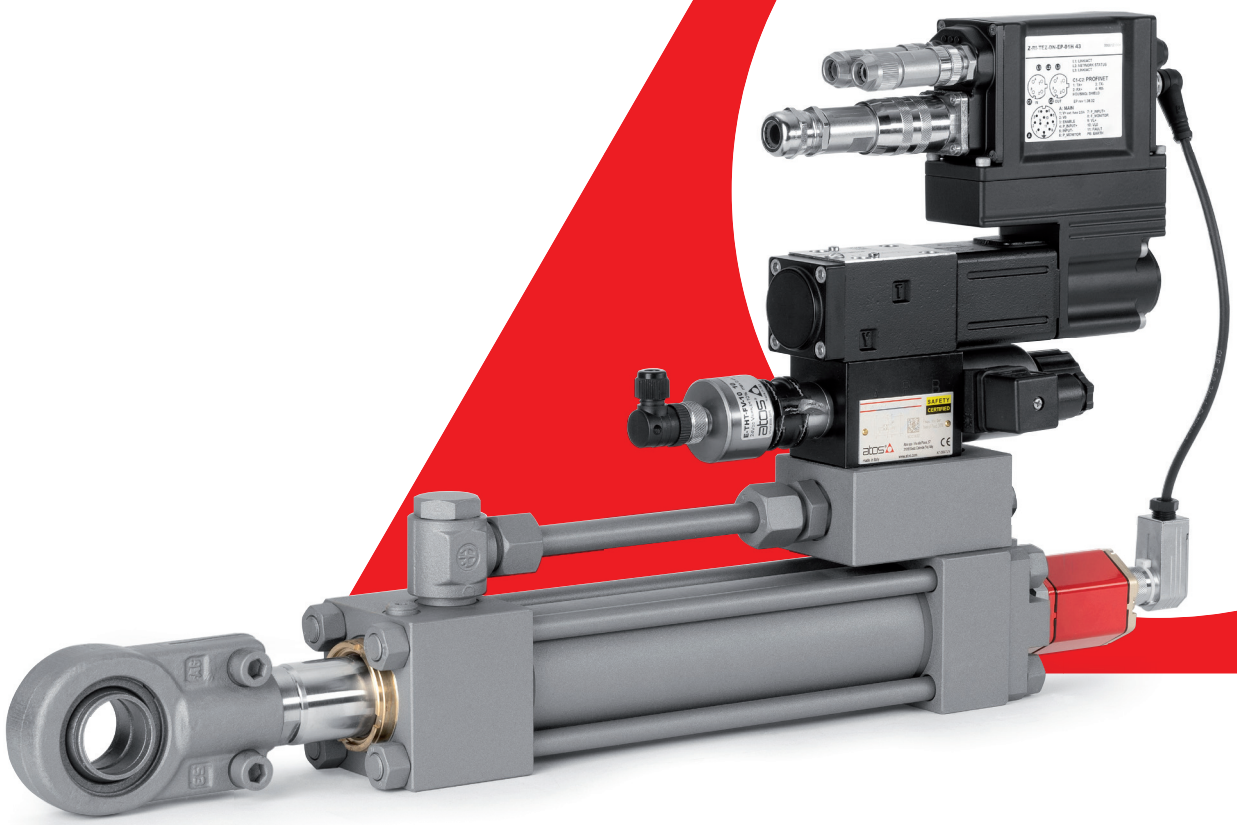

INDEX

AXIS & p/Q CONTROLS

		Size	Qmax [l/min]	Table	Pag
TECHNICAL INFORMATION					
Programming tools for valve drivers and axis controls				GS500	941
Fieldbus features				GS510	949
Mounting surfaces for electrohydraulic valves				P005	958
Mounting surfaces and cavities for cartridge valves				P006	962
AXIS CONTROLS					
servoproportional directionals					
DLHZO-TEZ DLKZOR-TEZ	direct, zero overlap, sleeve execution, on-board driver & axis card	06 ÷ 10	70 ÷ 130	FS610	562
DHZO-TEZ, DKZOR-TEZ	direct, zero overlap, on-board driver & axis card	06 ÷ 10	80 ÷ 180	FS620	578
DPZO-LEZ	piloted, zero overlap, on-board driver & axis card	10 ÷ 35	180 ÷ 3500	FS630	593
electronics, DIN-rail EN 60715					
Z-BM-TEZ, Z-BM-LEZ	off-board driver & axis card for servoproportional directionals			GS330	613
Z-BM-KZ	off-board axis card for servoproportional directionals			GS340	625
servoactuators					
AZC	servocylinder plus servoproportional directional with on-board driver & axis card			FS700	637
SERVOPUMPS					
SSP servopumps	high performance & energy saving p/Q servopumps			AS100	641
For complete servopumps documentation see **KTP catalog**					
p/Q CONTROLS					
servoproportional & high performance directionals					
DLHZO-TES, DLKZOR-TES	direct, zero overlap, sleeve execution, on-board driver	06 ÷ 10	70 ÷ 130	FS500	651
DHZO-TES, DKZOR-TES	direct, positive or zero overlap, on-board driver	06 ÷ 10	80 ÷ 180		
DPZO-LES	piloted, positive or zero overlap, on-board driver	10 ÷ 35	180 ÷ 3500		
LIQZP-LES	3 way cartridge, piloted, on-board driver	25 ÷ 80	500 ÷ 5000		
electronics, DIN-rail EN 60715					
E-BM-TES, E-BM-LES	off-board driver for servoproportional & high performance directionals, fieldbus			GS240	520
variable displacement pumps, axial piston					
PVPC proportional	flow, pressure or p/Q controls			AS170	655
For complete pumps documentation see **KTP catalog**					
ACCESSORIES					
E-ATR-8	pressure transducer with amplified analog output signal			GS465	912
BA	single station subplates, mounting surfaces ISO 4401, 6264 and 5781			K280	918
CONNECTORS	for transducers, pumps, on-off and proportional valves			K800	926
OPERATING INFORMATION					
Operating and maintenance information for proportional valves				FS900	968

Supplementary components range available on **www.atos.com**

Digital servoproportionals with on-board axis card

direct, single solenoid, sleeve execution, with LVDT transducer and zero spool overlap, autotuning

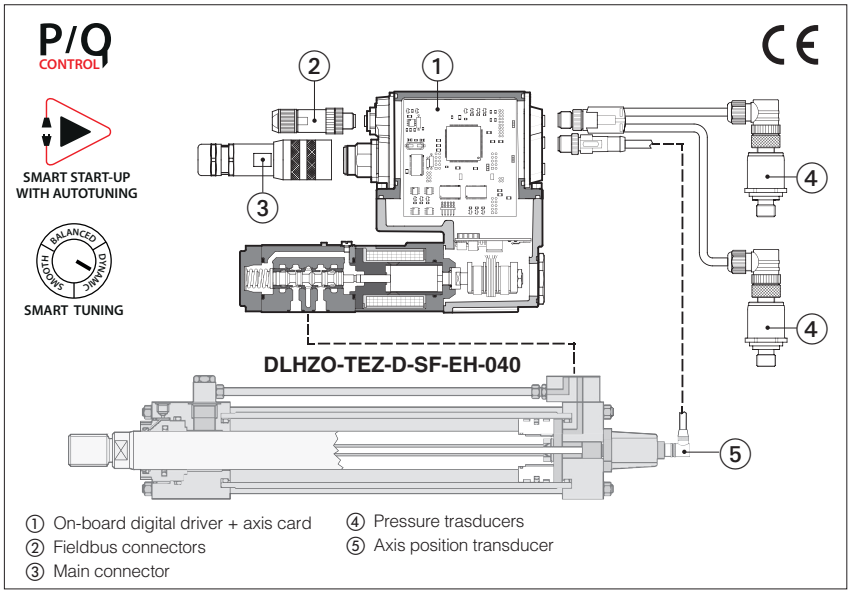

DLHZO-TEZ, DLKZOR-TEZ

Digital servoproportional directional valves, direct, single solenoid, sleeve execution, with on-board digital driver + axis card, LVDT position transducer and zero spool overlap for best performances in any position closed loop controls of linear or rotative hydraulic actuator. The sleeve execution grants high regulation accuracy and response sensitivity.

The controlled actuator has to be equipped with position transducer (analog, potentiometer, SSI or Encoder) to read the axis position feedback.

Optional alternated p/Q control add the force limitation to position regulation, requiring pressure or force transducers installation.

Smart Start-up procedure makes the commissioning quicker and easier, thanks to the Autotuning and Smart Tuning functionalities. Multiple PID sets allows to easily switch axis behaviour according to machine cycle.

DLHZO:	**DLKZOR**:
Size: **06** -ISO 4401	Size: **10** -ISO 4401
Max flow: **70 l/min**	Max flow: **130 l/min**
Max pressure: **350 bar**	Max pressure: **315 bar**

1 MODEL CODE

DLHZO - TEZ - D - SN - NP - 0 40 - L 7 3 / * / * / * / *

DLHZO
Servoproportional directional valves, direct
DLHZOR = size 06
DLKZOR = size 10

TEZ = on-board digital driver + axis card, one LVDT transducer

Position transducer type:
A = Analog (standard, potentiometer)
D = Digital (SSI, Encoder)

Alternated p/Q controls, see section 3 :
SN = none
SF = force control (2 pressure transducers)
SL = force control (1 load cell)

Fieldbus interface, USB port always present:
NP = Not Present
BC = CANopen
BP = PROFIBUS DP
EH = EtherCAT
EW = POWERLINK
EI = EtherNet/IP
EP = PROFINET RT/IRT

Valve size ISO 4401: **0** = 06 **1** = 10

Configuration: **Standard** Option **/B**

40 = with fail safe configuration 1 or 3

60 = without fail safe

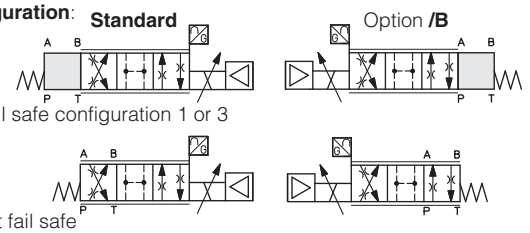

Spool type, regulating characteristics, see section 15 :
L = linear **V** = progressive **T** = not linear **(1)**

D = differential-linear **(1)**
P-A = Q, B-T = Q/2
P-B = Q/2, A-T = Q

DT = differential-not linear **(1)**
P-A = Q, B-T = Q/2
P-B = Q/2, A-T = Q

Series number

Seals material, see section 14 :
- = NBR
PE = FKM
BT = NBR low temperature

Safety options TÜV certified **(2)**:
U = safe double power supply
K = safe on/off signals
See section 10

SAFETY CERTIFIED

Hydraulic options (2):
B = solenoid with on-board digital driver + axis card and position transducer at side of port A
Y = external drain

Electronic options (2):
C = current feedback for analog position and pressure transducers 4÷20mA
I = current reference input and monitor 4÷20mA

Fail safe configuration, see section 16 :
1 = **3** =

Note: select **1** for configuration **60** even without fail safe

Spool size:	**0**(L)	**1**(L)	**1**(V)	**3**(L)	**3**(T)	**3**(V)	**5**(L,T)	**7**(L,T,V,D,DT)
DLHZO =	4	7	8	14	-	20	28	40
DLKZOR =	-	-	-	60	60	-	-	100

Nominal flow (l/min) at Δp 70bar P-T (see section 12)

(1) Not available for configuration **60** **(2)** For possible combined options, see section 19

2 POSITION CONTROL

2.1 External reference signal

Axis card controls in closed loop the actuator position according to a position reference signal from the machine central unit.

Position profile can be managed in two ways (software selectable):

- Without trajectory generation **(a)**: the axis card receives from the machine central unit the position reference signal and follows it at any given instant
- With trajectory generation **(b)**: the axis card receives from the machine central unit just the final target position and internally generates a position profile limiting acceleration, velocity and deceleration

The position reference signal can be software selected between Analog reference **(c)** and Fieldbus reference **(d)**.

Refer to the axis card user manual for further details on position control features.

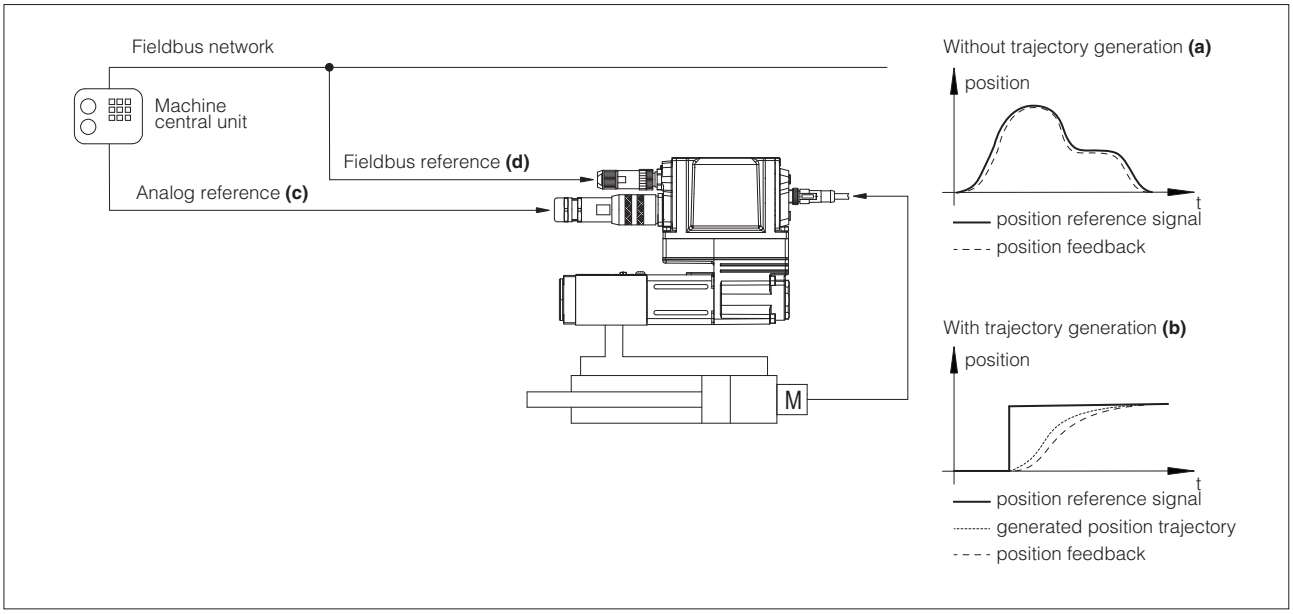

2.2 Automatic cycle

Axis card controls in closed loop the actuator position according to an internally generated automatic cycle: only start, stop and switch-over commands are required from the machine electronic central unit by means On-off commands **(e)** or Fieldbus commands **(f)**.

Atos PC software allows to realize an automatic cycle according to the application requirements. Refer to the axis card user manual for further details on automatic cycle features.

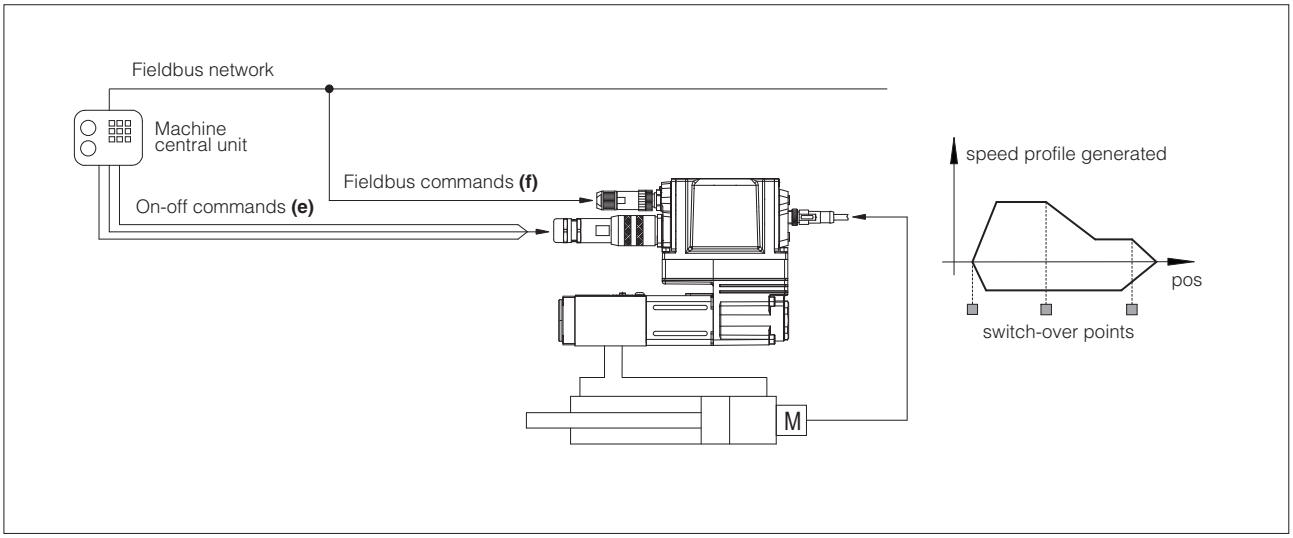

3 ALTERNATED POSITION / FORCE CONTROL

SF and **SL** controls add the alternated force closed loop control to the actuator standard position control. Pressure or force remote transducers have to be installed on the actuator and interfaced to the valve, see below functional schemes.
The position/force controls are operated according to two separate reference signals and a dedicated algorithm automatically selects which control is active time by time.

The dynamics of the switching between the two controls can be regulated thanks to specific software setting, in order to avoid instability and vibrations.

Position control is active (see phase ① and ③ at side) when the actuator force is lower than the relevant reference signal - the valve controls the actuator position by closed-loop regulation.

Force control is active (see phase ② and ④ at side) when the actuator actual force, measured by remote transducers, grows up to the relevant reference signal - the axis card reduces the valve's regulation in order to limit the actuator force; if the force tends to decrease under its reference signal, the position control returns active.

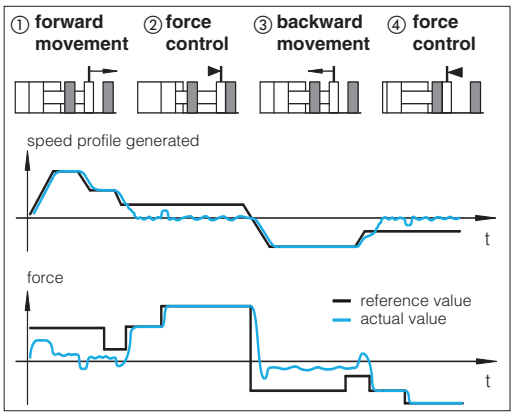

Alternated control configurations

SF	SL
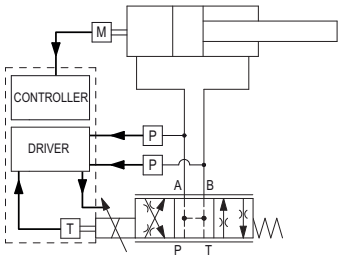	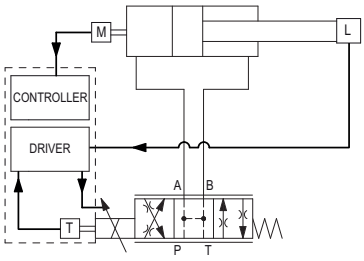
two remote pressure transducers have to be installed on the actuator's ports; the actuator force is calculated by the pressure feedbacks (Pa - Pb)	one load cell transducer has to be installed between the actuator and the controlled load

T valve spool transducer	M actuator position transducer	P pressure transducer	L load cell

SF – position/force control
Adds force control to standard position control and permits to limit the max force in two directions controlling in closed loop the delta pressure acting on both sides of the hydraulic actuator. Two pressure transducers have to be installed on A and B hydraulic lines.

SL – position/force control
Adds force control to standard position control and permits to limit the max force in one or two directions controlling in closed loop the force performed by the hydraulic actuator. A load cell has to be installed on the hydraulic actuator.

General Notes:
- auxiliary check valves are recommended in case of specific hydraulic configuration requirements in absence of power supply or fault
- Atos technical office is available for additional evaluations related to specific applications

4 GENERAL NOTES

Atos digital proportionals valves are CE marked according to the applicable directives (e.g. Immunity and Emission EMC Directive).
Installation, wirings and start-up procedures must be performed according to the general prescriptions shown in tech table **FS900** and in the user manuals included in the Z-SW-SETUP programming software.

5 VALVE SETTINGS AND PROGRAMMING TOOLS - see tech. table GS500

Free downloadable software for PC allows to set all valve functional parameters and to access complete diagnostic information of digital axis controls via Bluetooth/USB service port.
Atos Z-SW-SETUP PC software supports all Atos digital axis controls and it is available at www.atos.com in MyAtos area.

⚠ **WARNING: axis card USB port is not isolated!** For E-C-SB-USB/M12 cable, the use of E-A-SB-USB/OPT isolator adapter is highly recommended for PC protection

⚠ **WARNING:** for the list of countries where the Bluetooth adapter has been approved, see tech. table **GS500**

Bluetooth or USB connection

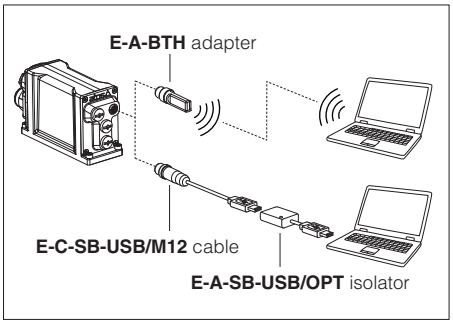

6 SMART START-UP

The automatic procedure supports the user during the commissioning phases of the axis control with guided procedures:

- **General setting**
It assists the user in system data setup, as like cylinder stroke, diameters, load mass, configure analog/digital signals and communication interface, position transducer setup.
- **System check**
It automatically executes position open loop movements to set axis control parameters, position transducer calibration and verify cylinder stroke.
- **Position autotuning**
It automatically determines the optimal PID parametrization of the position control adapting the dynamic response to guarantee control precision and axis stability. Once the procedure is started, the control performs few automatic position open loop movements of the actuator, during which control parameters are calculated and stored.

7 SMART TUNING

Once the Smart Start-up procedure has been completed, the Smart tuning feature allows to further refine the position control response by choosing from 3 different levels of performance in positioning:

- **dynamic** best dynamics and accuracy (default factory setting)
- **balanced** average dynamics and accuracy
- **smooth** attenuated dynamics and accuracy to improve control stability in critical applications or in environments with electrical disturbances

Settings can be changed any time via Z-SW-SETUP software or fieldbus.

If required, control performance can be further customized by modifying PID parameter via Z-SW-SETUP software.

1 = position reference signal
2 = generated position trajectory
3 = dynamic
4 = balanced
5 = smooth

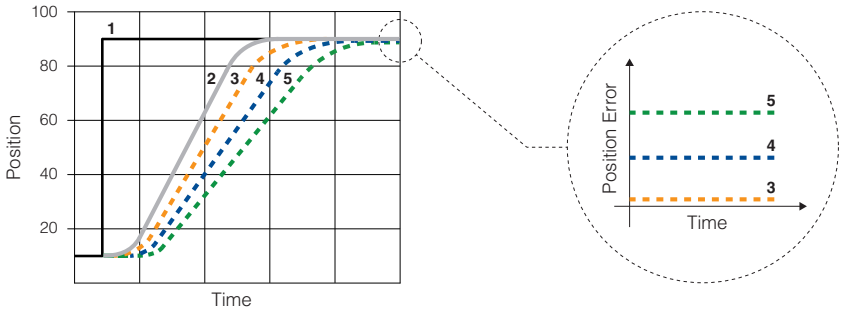

8 MULTIPLE SETS

Multiple PID sets allows to easily switch axis behaviour according to machine cycle, selecting between independent groups of parameters for:

- **position control PID**
- **force control PID and p/Q logics switching criteria**

Settings can be changed any time via Z-SW-SETUP software, fieldbus or digital input signals.

9 FIELDBUS - see tech. table GS510

Fieldbus allows valve direct communication with machine control unit for digital reference, valve diagnostics and settings. These execution allow to operate the valves through fieldbus or analog signals available on the main connector.

10 SAFETY OPTIONS

Atos range of proportional directional valves, provides functional safety options **/U** and **/K** , designed to accomplish a safety function, intended to reduce the risk in process control systems.

They are **TÜV certified** in compliance to **IEC 61508 up to SIL 3 and ISO 13849 up to category 4, PL e**

Safe double power supply, option **/U**: the axis card has separate power supplies for logic and solenoids. The safe condition is reached by cutting the electrical supply to solenoids, while electronics remains active for monitoring functions and fieldbus communication, see tech table **FY100**

Safety function via on/off signals, option **/K**: upon a disable command, the axis card checks the spool position and it provides on-off acknowledgement signal only when the valve is in safe condition, see tech table **FY200**

11 GENERAL CHARACTERISTICS

Assembly position	Any position
Subplate surface finishing to ISO 4401	Acceptable roughness index: Ra ≤0,8, recommended Ra 0,4 – Flatness ratio 0,01/100
MTTFd valves according to EN ISO 13849	150 years, for further details see technical table P007
Ambient temperature range	**Standard** = -20°C ÷ +60°C **/PE** option = -20°C ÷ +60°C **/BT** option = -40°C ÷ +60°C
Storage temperature range	**Standard** = -20°C ÷ +70°C **/PE** option = -20°C ÷ +70°C **/BT** option = -40°C ÷ +70°C
Surface protection	Zinc coating with black passivation, galvanic treatment (driver housing)
Corrosion resistance	Salt spray test (EN ISO 9227) > 200 h
Vibration resistance	See technical table G004
Compliance	CE according to EMC directive 2014/30/EU (Immunity: EN 61000-6-2; Emission: EN 61000-6-3) RoHS Directive 2011/65/EU as last update by 2015/863/EU REACH Regulation (EC) n°1907/2006

12 HYDRAULIC CHARACTERISTICS - based on mineral oil ISO VG 46 at 50 °C

Valve model	**DLHZO**												**DLKZOR**						
Pressure limits [bar]	ports **P**, **A**, **B** = 350; **T** = 210 (250 with external drain /Y) **Y** = 10												ports **P**, **A**, **B** = 315; **T** = 210 (250 with external drain /Y) **Y** = 10						
Spool type and size	**L0**	**L1**	**V1**	**L3**	**V3**	**L5**	**T5**	**L7**	**T7**	**V7**	**D7**	**DT7**	**L3**	**T3**	**L7**	**T7**	**V7**	**D7**	**DT7**
Nominal flow Δp P-T [l/min] **(1)** Δp= 30 bar	2,5	4,5	8	9	13	18		26			26÷13 **(4)**		40		60			60÷33 **(4)**	
Δp= 70 bar	4	7	12	14	20	28		40			40÷20 **(4)**		60		100			100÷50 **(4)**	
Max permissible flow	8	14	16	30	40	50		70			70÷40 **(4)**		110		130			130÷65 **(4)**	
Leakage **(2)** [cm³/min]	<100	<200	<100	<300	<150	<500	<200	<900	<200	<200	<700	<200	<1000	<400	<1500	<400	<400	<1200	<400
Response time **(3)** [ms]	≤ 10												≤ 15						
Hysteresis	≤ 0,1 [% of max regulation]																		
Repeatibility	± 0,1 [% of max regulation]																		
Thermal drift	zero point displacement < 1% at ΔT = 40°C																		

(1) For different Δp, the max flow is in accordance to the diagrams in section 15.2
(2) Referred to spool in neutral position and 50°C oil temperature
(3) 0-100% step signal
(4) For spool type D7 and DT7 the flow value is referred to single path P-A (A-T) ÷ P-B (B-T) at Δp/2 per control edge

13 ELECTRICAL CHARACTERISTICS

Power supplies	Nominal : +24 VDC Rectified and filtered : VRMS = 20 ÷ 32 VMAX (ripple max 10 % VPP)			
Max power consumption	50 W			
Max. solenoid current	**DLHZO** = 2,6 A **DLKZOR** = 3 A			
Coil resistance R at 20°C	**DLHZO** = 3 ÷ 3,3 Ω **DLKZOR** = 3,8 ÷ 4,1 Ω			
Analog input signals	Voltage: range ±10 VDC (24 VMAX tolerant) Input impedance: Ri > 50 kΩ Current: range ±20 mA Input impedance: Ri = 500 Ω			
Monitor outputs	Output range: voltage ±10 VDC @ max 5 mA current ±20 mA @ max 500 Ω load resistance			
Enable input	Range: 0 ÷ 5 VDC (OFF state), 9 ÷ 24 VDC (ON state), 5 ÷ 9 VDC (not accepted); Input impedance: Ri > 10 kΩ			
Fault output	Output range: 0 ÷ 24 VDC (ON state > [power supply - 2 V] ; OFF state < 1 V) @ max 50 mA; external negative voltage not allowed (e.g. due to inductive loads)			
Position transducers power supply	+24 VDC @ max 100 mA and +5 VDC @ max 100 mA are software selectable; ±10 VDC @ max 14 mA minimum load resistance 700 Ω			
Pressure/Force transducer power supply (only for SF, SL)	+24VDC @ max 100 mA (E-ATR-8 see tech table **GS465**)			
Alarms	Solenoid not connected/short circuit, cable break with current reference signal, over/under temperature, valve spool transducer malfunctions, alarms history storage function			
Insulation class	H (180°) Due to the occurring surface temperatures of the solenoid coils, the European standards ISO 13732-1 and EN982 must be taken into account			
Protection degree to DIN EN60529	IP66 / IP67 with mating connectors			
Duty factor	Continuous rating (ED=100%)			
Tropicalization	Tropical coating on electronics PCB			
Additional characteristics	Short circuit protection of solenoid's current supply; 3 leds for diagnostic; protection against reverse polarity of power supply			
Communication interface	USB Atos ASCII coding	CANopen EN50325-4 + DS408	PROFIBUS DP EN50170-2/IEC61158	EtherCAT, POWERLINK, EtherNet/IP, PROFINET IO RT / IRT EC 61158
Communication physical layer	not insulated USB 2.0 + USB OTG	optical insulated CAN ISO11898	optical insulated RS485	Fast Ethernet, insulated 100 Base TX
Recommended wiring cable	LiYCY shielded cables, see section 24			

Note: a maximum time of 800 ms (depending on communication type) has to be considered between the axis card energizing with the 24 VDC power supply and when the valve is ready to operate. During this time the current to the valve coils is switched to zero.

14 SEALS AND HYDRAULIC FLUIDS - for other fluids not included in below table, consult our technical office

Seals, recommended fluid temperature		NBR seals (standard) = -20°C ÷ +60°C, with HFC hydraulic fluids = -20°C ÷ +50°C FKM seals (/PE option) = -20°C ÷ +80°C NBR low temp. seals (/BT option) = -40°C ÷ +60°C, with HFC hydraulic fluids = -20°C ÷ +50°C		
Recommended viscosity		20÷100 mm²/s - max allowed range 15 ÷ 380 mm²/s		
Max fluid contamination level	normal operation	ISO4406 class 18/16/13 NAS1638 class 7		see also filter section at www.atos.com or KTF catalog
	longer life	ISO4406 class 16/14/11 NAS1638 class 5		
Hydraulic fluid		**Suitable seals type**	**Classification**	**Ref. Standard**
Mineral oils		NBR, FKM, NBR low temp.	HL, HLP, HLPD, HVLP, HVLPD	DIN 51524
Flame resistant without water		FKM	HFDU, HFDR	ISO 12922
Flame resistant with water		NBR, NBR low temp.	HFC	

15 DIAGRAMS (based on mineral oil ISO VG 46 at 50 °C)

15.1 Regulation diagrams

1 = Linear spools L
2 = Differential - linear spool D7

3 = Differential non linear spool DT7
4 = Non linear spool T5 (only for DLHZO)

5 = Non linear spool T3 (only for DLHZO) and T7
6 = Progressive spool V

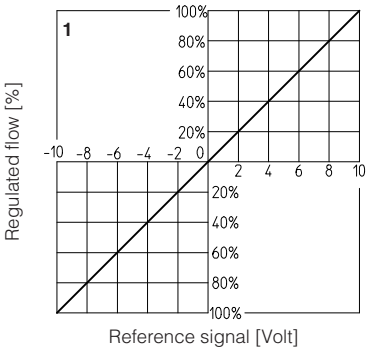

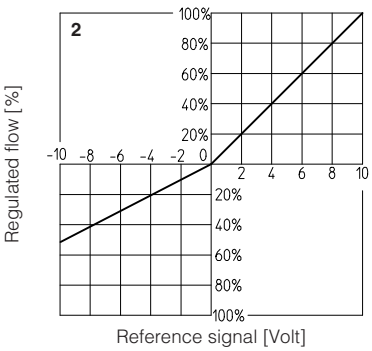

T3, T5 and T7 spool types are specific for fine low flow control in the range from 0 to 60% (T5) and 0 to 40% (T3 and T7) of max spool stroke.
The non linear characteristics of the spool is compensated by the axis card, so the final valve regulation is resulting linear respect the reference signal (dotted line).

DT7 has the same characteristic of T7 but it is specific for applications with cylinders with area ratio 1:2

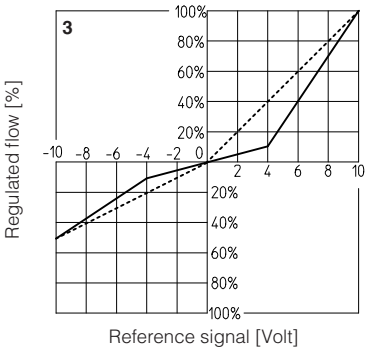

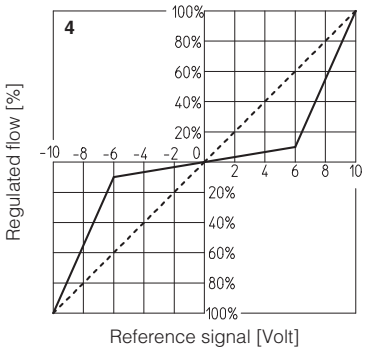

Note:
Hydraulic configuration vs. reference signal:

Standard:
Reference signal 0 ÷ +10 V / 12 ÷ 20 mA } P → A / B → T
Reference signal 0 ÷ -10 V / 12 ÷ 4 mA } P → B / A → T

option /B:
Reference signal 0 ÷ +10 V / 12 ÷ 20 mA } P → B / A → T
Reference signal 0 ÷ -10 V / 12 ÷ 4 mA } P → A / B → T

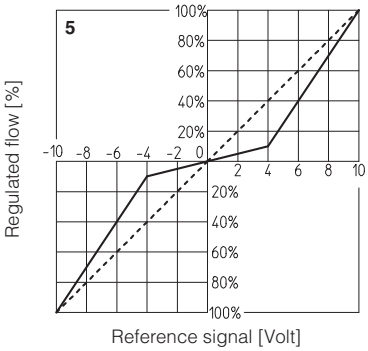

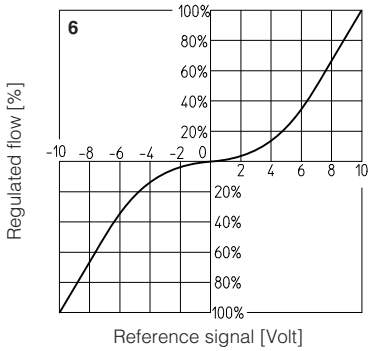

15.2 Flow /Δp diagrams

Stated at 100% of spool stroke

DLHZO:
1 = spool L7, T7, V7, D7, DT7
2 = spool L5, T5
3 = spool V3
4 = spool L3
5 = spool L1, V1
6 = spool L0

DLKZOR:
7 = spool L7, T7, V7, D7, DT7
8 = spool L3, T3

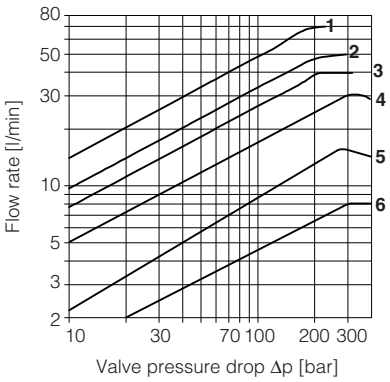

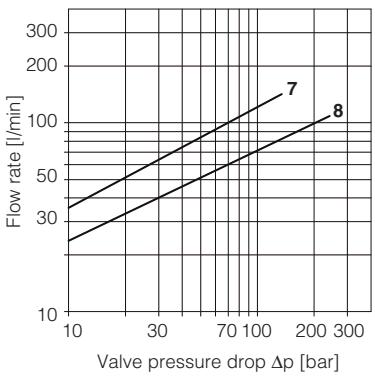

15.3 Pressure gain

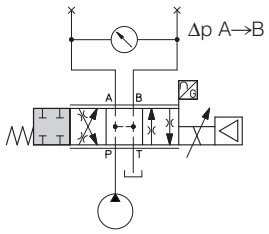

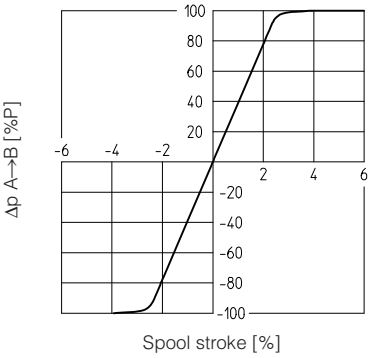

15.4 Valve response time

The valve response times in below diagrams are measured at different steps of the reference input signal. They have to be considered as average values.

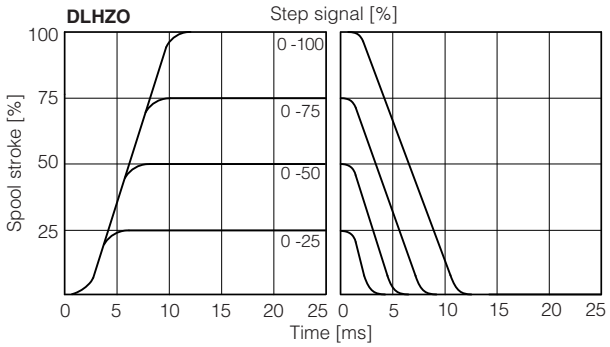

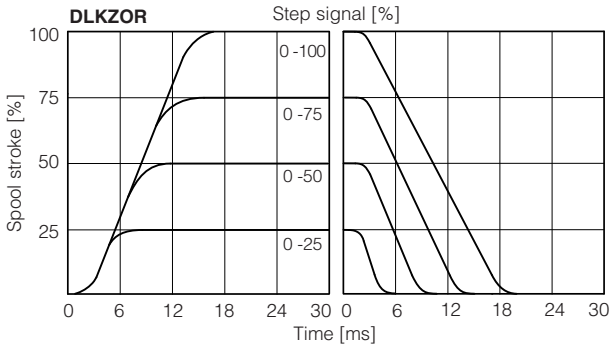

15.5 DLHZO Bode diagrams

Stated at nominal hydraulic conditions

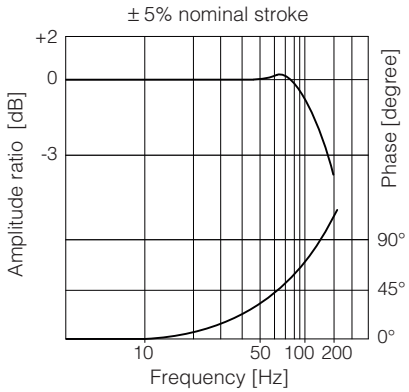

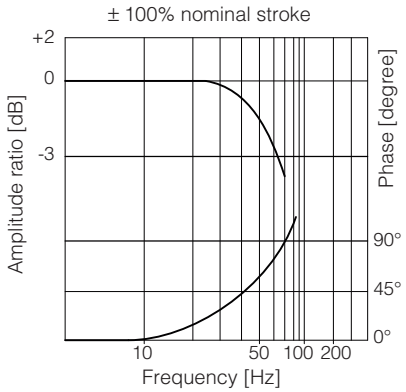

15.6 DLKZOR Bode diagrams

Stated at nominal hydraulic conditions

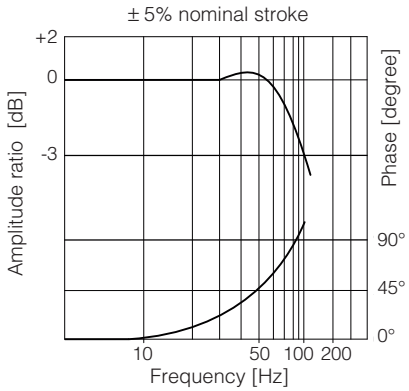

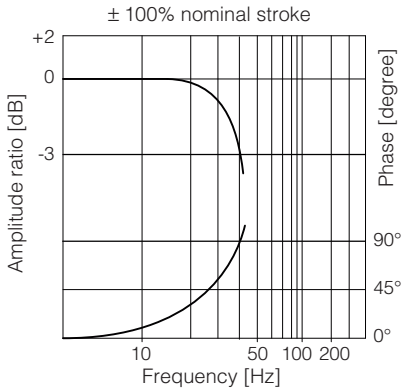

16 FAIL SAFE POSITION

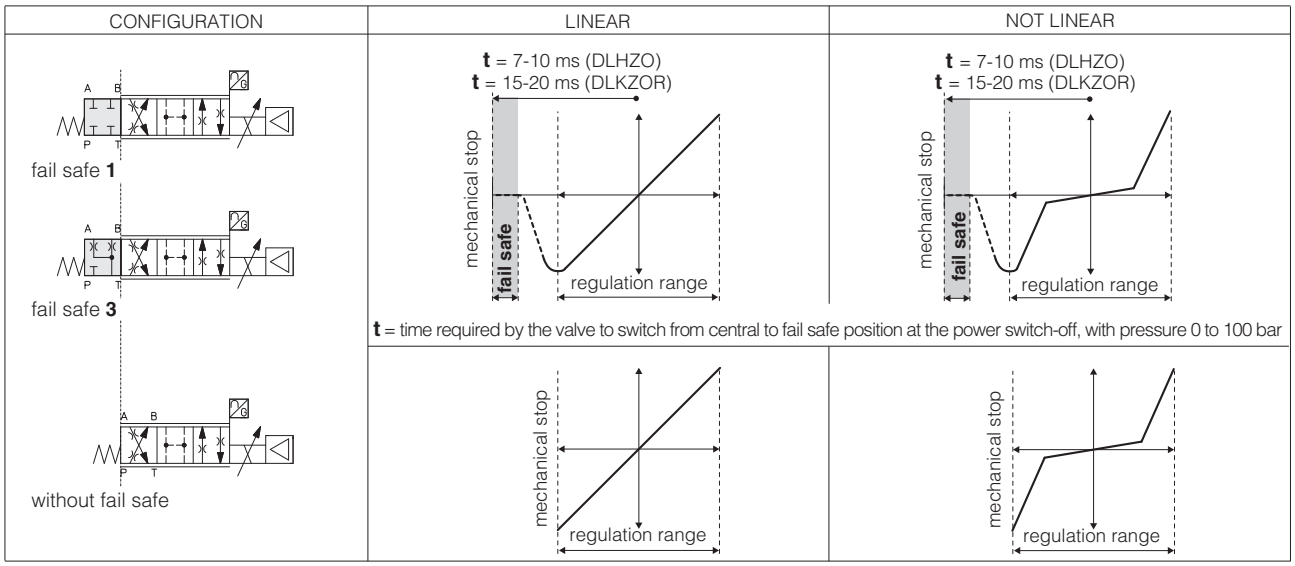

Fail safe connections		P → A	P → B	A → T	B → T
Leakage [cm³/min] at P = 100 bar **(1)**	Fail safe 1	50	70	70	50
	Fail safe 3	50	70	-	-
Flow [l/min] **(2)** DLHZO / DLKZOR	Fail safe 3	-	-	15÷30	10÷20
		-	-	40÷60	25÷40

(1) Referred to spool in fail safe position and 50°C oil temperature

(2) Referred to spool in fail safe position at Δp = 35 bar per edge

17 HYDRAULIC OPTIONS

B = Solenoid, on-board digital driver + axis card and LVDT position transducer at side of port A.
For hydraulic configuration vs reference signal, see 15.1

Y = This option is mandatory if the pressure in port T exceeds 210 bar.

18 ELECTRONIC OPTIONS

I = This option provides 4 ÷ 20 mA current reference and monitor signals, instead of the standard ±10 VDC.
Input signal can be reconfigured via software selecting between voltage and current, within a maximum range of ±10 VDC or ±20 mA.
It is normally used in case of long distance between the machine control unit and the valve or where the reference signal can be affected by electrical noise; the valve functioning is disabled in case of reference signal cable breakage.

C = This option is available to connect analog position transducer and pressure/force transducers with 4 ÷ 20 mA current output signal, instead of the standard ±10 VDC.
Input signal can be reconfigured via software selecting between voltage and current, within a maximum range of ±10 VDC or ±20 mA.

19 POSSIBLE COMBINED OPTIONS

Standard versions for **D-SN**:
/BI, /BIY, /BY, /IY

Safety certified versions for **D-SN**:
/BI/U, /BIY/U, /B/U, /BY/U, /I/U, /IY/U, /Y/U
/BI/K, /BIY/K, /B/K, /BY/K, /I/K, /IY/K, /Y/K

Standard versions for **A-SN**, **A-SF**, **A-SL** and **D-SF**, **D-SL**:
/BC, /BCI, /BCIY, /BCY, /BI, /BIY, /BY,
/CI, /CIY, /CY,
/IY

Safety certified versions for **A-SN**, **A-SF**, **A-SL** and **D-SF**, **D-SL**:
/BC/U, /BCI/U, /BCIY/U, /BCY/U, /BI/U, /BIY/U, /B/U, /BY/U,
/C/U, /CI/U, /CIY/U, /CY/U, /I/U, /IY/U, /Y/U
/BC/K, /BCI/K, /BCIY/K, /BCY/K, /BI/K, /BIY/K, /B/K, /BY/K,
/C/K, /CI/K, /CIY/K, /CY/K, /I/K, /IY/K, /Y/K

20 POWER SUPPLY AND SIGNALS SPECIFICATIONS

Generic electrical output signals of the valve (e.g. fault or monitor signals) must not be directly used to activate safety functions, like to switch-ON/OFF the machine's safety components, as prescribed by the European standards (Safety requirements of fluid technology systems and components-hydraulics, ISO 4413).
For certified safety options: **/U** see tech. table **FY100** and **/K** see tech. table **FY200**

20.1 Power supply (V+ and V0)

The power supply must be appropriately stabilized or rectified and filtered: apply at least a 10000 µF/40 V capacitance to single phase rectifiers or a 4700 µF/40 V capacitance to three phase rectifiers. In case of separate power supply see 20.2.

⚠ A safety fuse is required in series to each power supply: 2,5 A time lag fuse.

20.2 Power supply for axis card logic and communication (VL+ and VL0)

The power supply for axis card logic and communication must be appropriately stabilized or rectified and filtered: apply at least a 10000 µF/40 V capacitance to single phase rectifiers or a 4700 µF/40 V capacitance to three phase rectifiers.
The separate power supply for axis card logic on pin 9 and 10, allow to remove solenoid power supply from pin 1 and 2 maintaining active the diagnostics, USB and fieldbus communications.

⚠ A safety fuse is required in series to each axis card logic and communication power supply: 500 mA fast fuse.

20.3 Position reference input signal (P_INPUT+)

Functionality of P_INPUT+ signal (pin 4), depends on axis card reference mode, see section 2 :

external analog reference (see 2.1): input is used as reference for control in closed loop the actuator position.
Reference input signal is factory preset according to selected valve code, defaults are ±10 VDC for standard and 4 ÷ 20 mA for /I option.
Input signal can be reconfigured via software selecting between voltage and current, within a maximum range of ±10 VDC or ± 20 mA.

external fieldbus reference (see 2.1) *or automatic cycle* (see 2.2)*:* analog reference input signal can be used as on-off commands with input range 0 ÷ 24 VDC.

20.4 Force reference input signal (F_INPUT+) - only for SF, SL

Functionality of F_INPUT+ signal (pin 7), depends on selected axis card reference mode and alternated control options, see section 3 :

SL, SF controls and external analog reference selected : input is used as reference for the axis card force closed loop.
Reference input signal is factory preset according to selected valve code, defaults are ±10 VDC for standard and 4 ÷ 20 mA for /I option.
Input signal can be reconfigured via software selecting between voltage and current, within a maximum range of ±10 VDC or ± 20 mA.

SN control or fieldbus reference selected: analog reference input signal can be used as on-off commands with input range 0 ÷ 24 VDC.

20.5 Position monitor output signal (P_MONITOR)

The axis card generates an analog output signal proportional to the actual axis position; the monitor output signal can be software set to show other signals available in the axis card (e.g. analog reference, fieldbus reference, position error, valve spool position).
Monitor output signal is factory preset according to selected valve code, defaults are ±10 VDC for standard and 4 ÷ 20 mA for /I option.
Output signal can be reconfigured via software selecting between voltage and current, within a maximum range of ±10 VDC or ± 20 mA.

20.6 Force monitor output signal (F_MONITOR) - only for SF, SL

The axis card generates an analog output signal according to alternated force control option:
SN control: output signal is proportional to the actual valve spool position
SL, SF controls: output signal is proportional to the actual force applied to the cylinder's rod end
Monitor output signals can be software set to show other signals available in the axis card (e.g. analog reference, force reference).
The output range and polarity are software selectable within the maximum range ±10 VDC or ±20 mA.
Monitor output signal is factory preset according to selected valve code, defaults are ±10 VDC for standard and 4 ÷ 20 mA for /I option.
Output signal can be reconfigured via software selecting between voltage and current, within a maximum range of ±10 VDC or ± 20 mA.

20.7 Enable input signal (ENABLE)

To enable the axis card, a 24VDC voltage has to be applied on pin 3.
When the Enable signal is set to zero the axis card can be software set to perform one of the following actions:
- maintain the actuator actual position in close loop control
- move towards a predefined position in closed loop control and maintains the reached position (hold position)
- move forward or backward in open loop (only the valve's closed loop remain active)

20.8 Fault output signal (FAULT)

Fault output signal indicates fault conditions of the axis card (solenoid short circuits/not connected, reference or transducer signal cable broken, maximum error exceeded, etc.). Fault presence corresponds to 0 VDC, normal working corresponds to 24 VDC.
Fault status is not affected by the Enable input signal.
Fault output signal can be used as digital output by software selection.

20.9 Position transducer input signal

A position transducer must be always directly connected to the axis card. Select the correct axis card execution depending on the desired transducer interface: digital SSI or Encoder (D execution), potentiometer or a generic transducer with analog interface (A execution).
Position digital input signal is factory preset to binary SSI, it can be reconfigured via software selecting between binary/gray SSI and Encoder.
Position analog input signal is factory preset according to selected valve code, defaults are ±10 VDC for standard and 4 ÷ 20 mA for /C option.
Input signal can be reconfigured via software selecting between voltage and current, within a maximum range of ±10 VDC or ± 20 mA.
Refer to position transducer characteristics to select the transducer type according to specific application requirements (see 21.1).

20.10 Remote pressure/force transducer input signals - only for SF, SL

Analog remote pressure transducers or load cell can be directly connected to the axis card.
Analog input signal is factory preset according to selected valve code, defaults are ±10 VDC for standard and 4 ÷ 20 mA for /C option.
Input signal can be reconfigured via software selecting between voltage and current, within a maximum range of ±10 VDC or ± 20 mA.
Refer to pressure/force transducer characteristics to select the transducer type according to specific application requirements (see 21.2).

21 ACTUATOR'S TRANSDUCER CHARACTERISTICS

21.1 Position transducers

The accuracy of the position control is strongly dependent to the selected position transducer. Four different transducer interfaces are available on the axis cards, depending to the system requirements: potentiometer or analog signal (A execution), SSI or Encoder (D execution).
Transducers with digital interface allow high resolution and accurate measures, that combined with fieldbus communication grants highest performances.
Transducers with analog interface grant simple and cost effective solutions.

21.2 Pressure/force transducers

The accuracy of the force control is strongly dependent to the selected pressure/force transducer, see section 3 .
Alternated force controls require to install pressure transducers or load cell to measure the actual pressure/force values.
Pressure transducers allow easy system integration and cost effective solution for alternated position/force controls (see tech table **GS465** for pressure transducers details).
Load cell transducers allow the user to get high accuracy and precise regulations for alternated position/force control.
The characteristics of the remote pressure/force transducers must be always selected to match the application requirements and to obtain the best performances: transducer nominal range should be at least 115%÷120% of the maximum regulated pressure/force.

21.3 Transducers characteristics & interfaces - following values are just for reference, for details please consult the transducer's datasheet

	Position				**Pressure/Force**
Execution	**A**		**D**		**SF, SL**
Input type	Potentiometer	Analog	SSI **(3)**	Incremental Encoder	Analog
Power supply **(1)**	10 ÷ 30 VDC	+24 VDC	+24 VDC	+5 VDC / +24 VDC	+24 VDC
Axis card interface	0 ÷ 10 V	0 ÷ 10V 4 ÷ 20 mA	Serial SSI binary/gray	TTL 5Vpp - 150 KHz	±10 VDC 4 ÷ 20 mA
Max speed	0,5 m/s	1 m/s	1 m/s	2 m/s	-
Max resolution	< 0.4 % FS	< 0.2 % FS	5 µm	1 µm (@ 0.15 m/s)	< 0.4 % FS
Linearity error **(2)**	± 0.1% FS	< ±0.02% FS	< ± 0.02 % FS	< ± 0.001 % FS	< ±0.25% FS
Repeatability **(2)**	± 0.05% FS	< ± 0.005% FS	< ± 0.005 % FS	< ± 0.001 % FS	< ±0.1% FS

(1) Power supply provided by Atos axis card **(2)** Percentage of total stroke **(3)** For Balluff BTL7 with SSI interface only special code SA433 is supported

22 ELECTRONIC CONNECTIONS

For electronic connection of certified safety options **/U** see tech. table **FY100** and **/K** see tech. table **FY200**

22.1 Main connector - 12 pin (A)

PIN	SIGNAL	TECHNICAL SPECIFICATIONS	NOTES
1	**V+**	Power supply 24 VDC	Input - power supply
2	**V0**	Power supply 0 VDC	Gnd - power supply
3	**ENABLE**	Enable (24 VDC) or disable (0 VDC) the axis card, referred to VL0	Input - on/off signal
4	**P_INPUT+**	Position reference input signal: ±10 VDC / ±20 mA maximum range	Input - analog signal **Software selectable**
5	**INPUT-**	Negative reference input signal for P_INPUT+ and F_INPUT+	Gnd - analog signal
6	**P_MONITOR**	Position monitor output signal: ±10 VDC / ±20 mA maximum range, referred to VL0	Output - analog signal **Software selectable**
7	**F_INPUT+**	Force reference input signal (SF, SL controls): ±10 VDC / ±20 mA maximum range	Input - analog signal **Software selectable**
8	**F_MONITOR**	Force (SF, SL controls) or valve spool position (SN control) monitor output signal: ±10 VDC / ±20mA maximum range, referred to VL0	Output - analog signal **Software selectable**
9	**VL+**	Power supply 24 VDC for axis card logic and communication	Input - power supply
10	**VL0** (1)	Power supply 0 VDC for axis card logic and communication	Gnd - power supply
11	**FAULT**	Fault (0 VDC) or normal working (24 VDC), referred to VL0	Output - on/off signal
PE	**EARTH**	Internally connected to axis card housing	

(1) Do not disconnect VL0 before VL+ when the axis card is connected to PC USB port

22.2 Communication connectors (B) - (C)

(B) **USB connector - M12 - 5 pin** always present		
PIN	**SIGNAL**	**TECHNICAL SPECIFICATION** (1)
1	**+5V_USB**	Power supply
2	**ID**	Identification
3	**GND_USB**	Signal zero data line
4	**D-**	Data line -
5	**D+**	Data line +

(C1) (C2) **BC fieldbus execution, connector - M12 - 5 pin**		
PIN	**SIGNAL**	**TECHNICAL SPECIFICATION** (1)
1	**CAN_SHLD**	Shield
2	**not used**	(C1) - (C2) pass-through connection (2)
3	**CAN_GND**	Signal zero data line
4	**CAN_H**	Bus line (high)
5	**CAN_L**	Bus line (low)

(C1) (C2) **BP fieldbus execution, connector - M12 - 5 pin**		
PIN	**SIGNAL**	**TECHNICAL SPECIFICATION** (1)
1	**+5V**	Termination supply signal
2	**LINE-A**	Bus line (high)
3	**DGND**	Data line and termination signal zero
4	**LINE-B**	Bus line (low)
5	**SHIELD**	

(C1) (C2) **EH, EW, EI, EP fieldbus execution, connector - M12 - 4 pin**		
PIN	**SIGNAL**	**TECHNICAL SPECIFICATION** (1)
1	**TX+**	Transmitter
2	**RX+**	Receiver
3	**TX-**	Transmitter
4	**RX-**	Receiver
Housing	**SHIELD**	

(1) Shield connection on connector's housing is recommended

(2) Pin 2 can be fed with external +5V supply of CAN interface

22.3 Remote pressure/force transducer connector - M12 - 5 pin - only for **SF, SL** (D)

PIN	SIGNAL	TECHNICAL SPECIFICATION	NOTES	(D1) SL - Single transducer (1)		(D2) SF - Double transducers (1)	
				Voltage	Current	Voltage	Current
1	**VF +24V**	Power supply +24VDC	Output - power supply	Connect	Connect	Connect	Connect
2	**TR1**	1st signal transducer: ±10 VDC / ±20 mA maximum range	Input - analog signal **Software selectable**	Connect	Connect	Connect	Connect
3	**AGND**	Common gnd for transducer power and signals	Common gnd	Connect	/	Connect	/
4	**TR2**	2nd signal transducer: ±10 VDC / ±20 mA maximum range	Input - analog signal **Software selectable**	/	/	Connect	Connect
5	**NC**	Not connect		/	/	/	/

(1) Single/double transducer configuration is software selectable

Remote pressure transducers connection - example

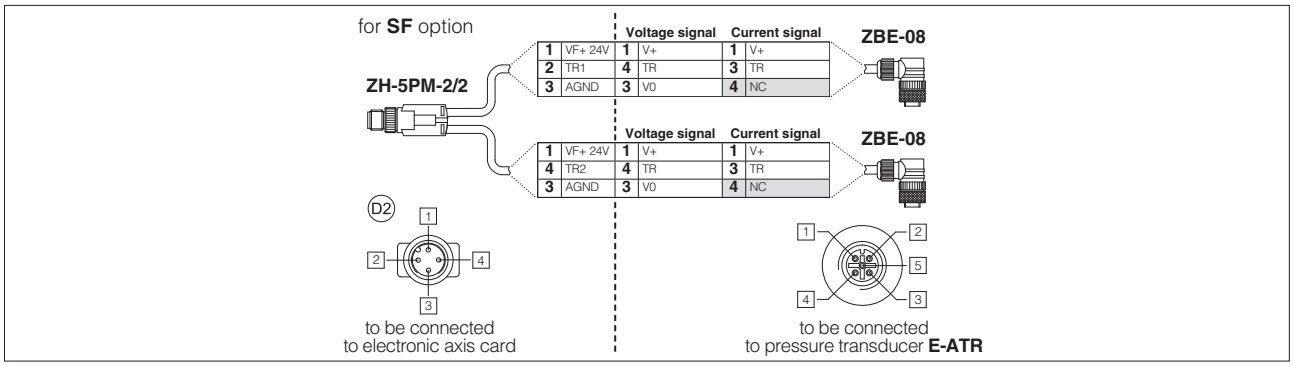

Note: pin layout always referred to axis card view

22.4 D execution - Digital position transducers connector - M12 - 8 pin (E1)

SSI - default transducer (1)				Encoder (1)		
PIN	SIGNAL	TECHNICAL SPECIFICATION	NOTES	SIGNAL	TECHNICAL SPECIFICATION	NOTES
1	**CLOCK+**	Serial syncronous clock (+)	Input - digital signal	**R**	Input channel R	Input - digital signal
2	**CLOCK-**	Serial syncronous clock (-)		**/R**	Input channel /R	
3	**DATA+**	Serial position data (+)		**A**	Input channel A	
4	**DATA-**	Serial position data (-)		**/A**	Input channel /A	
5	**NC**	Not connect	Do not connect	**B**	Input channel B	
6	**NC**			**/B**	Input channel /B	
7	**VP**	Power supply: +24VDC , +5VDC or OFF (default OFF)	Output - power supply **Software selectable**	**VP**	Power supply: +24VDC , +5VDC or OFF (default OFF)	Output - power supply **Software selectable**
8	**0 V**	Common gnd for transducer power and signals	Common gnd	**0 V**	Common gnd for transducer power and signals	Common gnd

(1) Digital position transducer type is software selectable: Encoder or SSI, see 20.9

SSI connection - example

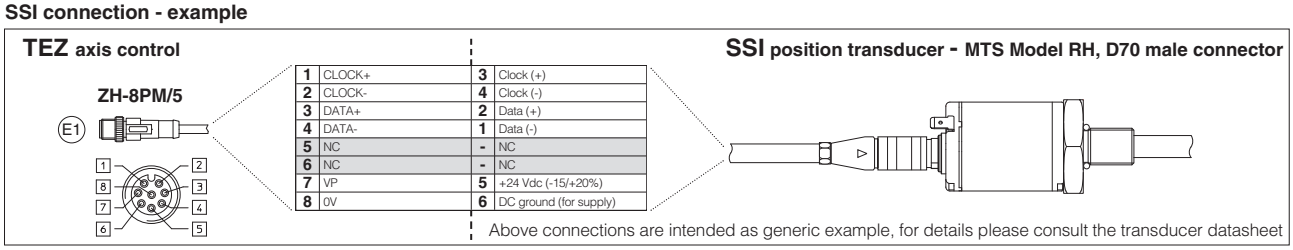

Note: pin layout referred to axis card view

Encoder connection - example

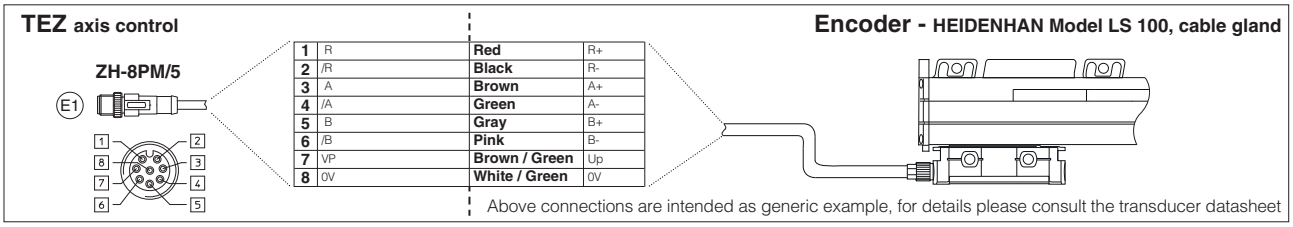

Note: pin layout referred to axis card view

22.5 A execution - Analog position transducers connector - M12 - 5 pin (E2)

PIN	SIGNAL	TECHNICAL SPECIFICATION	NOTES	Potentiometer	Analog
1	**VP +24V**	Power supply: +24VDC or OFF (default OFF)	Output - power supply **Software selectable**	/	Connect
2	**VP +10V**	Power supply reference +10VDC (always present)	Output - power supply	Connect	/
3	**AGND**	Common gnd for transducer power and signals	Common gnd	Connect	Connect
4	**TR**	Signal transducer	Input - analog signal	Connect	Connect
5	**VP -10V**	Power supply reference -10VDC (always present)	Output - power supply	Connect	/

Note: analog input range is software selectable, see 20.9

22.6 TEZ connections layout

DRIVER OVERVIEW

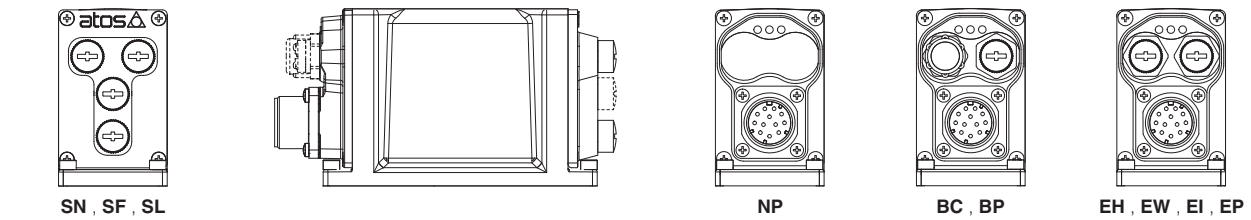

MAIN CONNECTORS

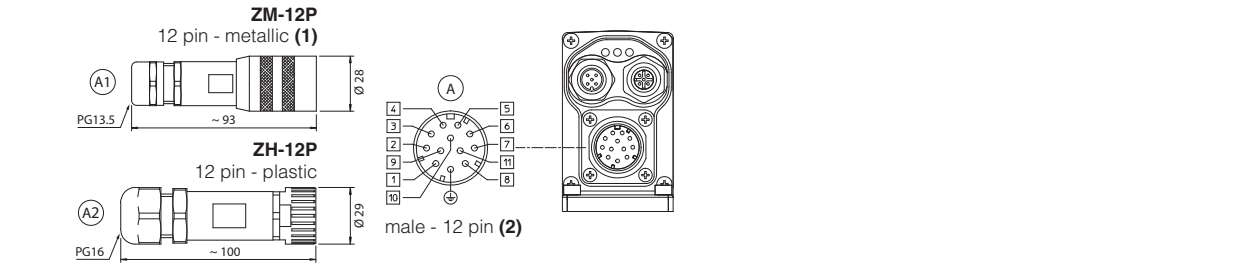

FIELDBUS CONNECTORS

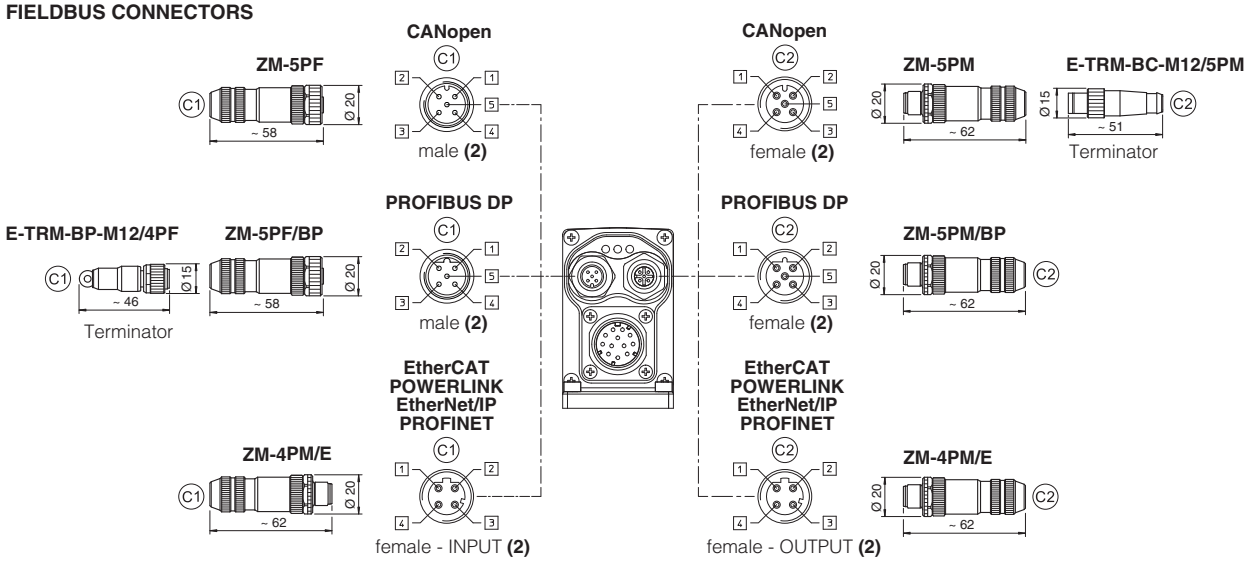

TRANSDUCERS CONNECTORS - BLUETOOTH ADAPTER AND USB CONNECTOR

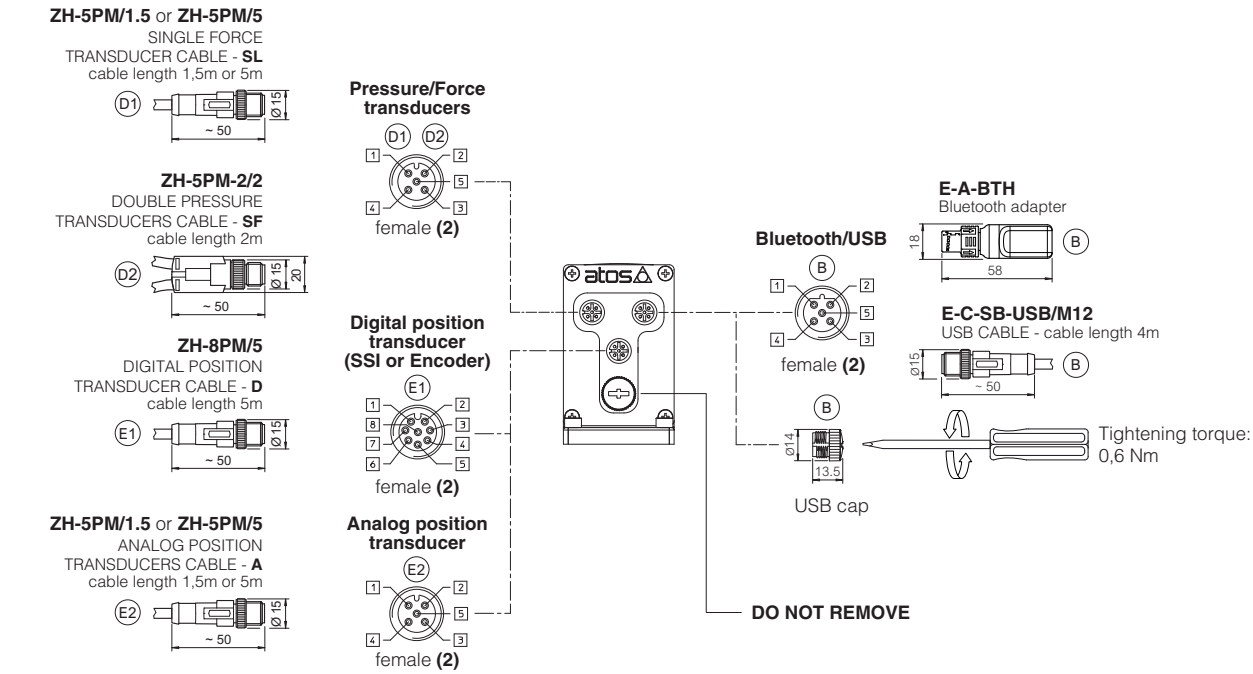

(1) Use of metallic connectors is strongly recommended in order to fulfill EMC requirements **(2)** Pin layout always referred to driver's view

22.7 Diagnostic LEDs (L)

Three leds show axis card operative conditions for immediate basic diagnostics. Please refer to the axis card user manual for detailed information.

FIELDBUS / LEDS	NP Not Present	BC CANopen	BP PROFIBUS DP	EH EtherCAT	EW POWERLINK	EI EtherNet/IP	EP PROFINET
L1	VALVE STATUS			LINK/ACT			
L2	NETWORK STATUS			NETWORK STATUS			
L3	SOLENOID STATUS			LINK/ACT			

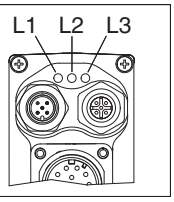

23 IN / OUT FIELDBUS COMMUNICATION CONNECTORS

Two fieldbus communication connectors are always available for digital axis card executions BC, BP, EH, EW, EI, EP. This features allows considerable technical advantages in terms of installation simplicity, wirings reduction and also avoid the usage expensive T-connectors.
For BC and BP executions the fieldbus connectors have an internal pass-through connection and can be used like end point of the fieldbus network, using an external terminator (see tech table **GS500**).
For EH, EW, EI and EP execution the external terminators are not required: each connector is internally terminated.

BC and BP pass-through connection

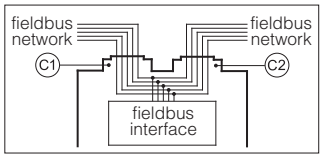

24 CONNECTORS CHARACTERISTICS - to be ordered separately

24.1 Main connectors

CONNECTOR TYPE	POWER SUPPLY AND SIGNALS	POWER SUPPLY AND SIGNALS
CODE	(A1) ZM-12P	(A2) ZH-12P
Type	12pin female straight circular	12pin female straight circular
Standard	DIN 43651	DIN 43651
Material	Metallic	Plastic reinforced with fiber glass
Cable gland	PG13,5	PG16
Recommended cable	LiYCY 12 x 0,75 mm² max 20 m (logic and power supply)	LiYCY 10 x 0,14mm² max 40 m (logic) LiYY 3 x 1mm² max 40 m (power supply)
Conductor size	0,5 mm² to 1,5 mm² - available for 12 wires	0,14 mm² to 0,5 mm² - available for 9 wires 0,5 mm² to 1,5 mm² - available for 3 wires
Connection type	to crimp	to crimp
Protection (EN 60529)	IP 67	IP 67

24.2 Fieldbus communication connectors

CONNECTOR TYPE	BC CANopen (1)		BP PROFIBUS DP (1)		EH EtherCAT, EW POWERLINK, EI EtherNet/IP, EP PROFINET (2)
CODE	(C1) ZM-5PF	(C2) ZM-5PM	(C1) ZM-5PF/BP	(C2) ZM-5PM/BP	(C1) (C2) ZM-4PM/E
Type	5 pin female straight circular	5 pin male straight circular	5 pin female straight circular	5 pin male straight circular	4 pin male straight circular
Standard	M12 coding A – IEC 61076-2-101		M12 coding B – IEC 61076-2-101		M12 coding D – IEC 61076-2-101
Material	Metallic		Metallic		Metallic
Cable gland	Pressure nut - cable diameter 6÷8 mm		Pressure nut - cable diameter 6÷8 mm		Pressure nut - cable diameter 4÷8 mm
Cable	CANbus Standard (DR 303-1)		PROFIBUS DP Standard		Ethernet standard CAT-5
Connection type	screw terminal		screw terminal		terminal block
Protection (EN 60529)	IP67		IP 67		IP 67

(1) E-TRM-** terminators can be ordered separately, see tech table **GS500**

(2) Internally terminated

24.3 Pressure/Force transducer connectors - only for **SF, SL**

CONNECTOR TYPE	SL - Single transducer		SF - Double transducers
CODE	(D1) ZH-5PM/1.5	(D1) ZH-5PM/5	(D2) ZH-5PM-2/2
Type	5 pin male straight circular		4 pin male straight circular
Standard	M12 coding A – IEC 61076-2-101		M12 coding A – IEC 61076-2-101
Material	Plastic		Plastic
Cable gland	Connector moulded on cables 1,5 m length	5 m length	Connector moulded on cables 2 m length
Cable	5 x 0,25 mm²		3 x 0,25 mm² (both cables)
Connection type	molded cable		splitting cable
Protection (EN 60529)	IP 67		IP 67

24.4 Position transducer connectors

CONNECTOR TYPE	DIGITAL POSITION TRANSDUCER D execution - see 22.4	ANALOG POSITION TRANSDUCER A execution - see 22.5	
CODE	(E1) ZH-8PM/5	(E2) ZH-5PM/1.5	(E2) ZH-5PM/5
Type	8 pin male straight circular	5 pin male straight circular	
Standard	M12 coding A – IEC 61076-2-101	M12 coding A – IEC 61076-2-101	
Material	Plastic	Plastic	
Cable gland	Connector moulded on cables 5 m length	Connector moulded on cables 1,5 m length	5 m length
Cable	8 x 0,25 mm²	5 x 0,25 mm²	
Connection type	molded cable	molded cable	
Protection (EN 60529)	IP 67	IP 67	

25 MAIN SOFTWARE PARAMETER SETTINGS

For a detailed descriptions of the available settings, wirings and installation procedures, please refer to the user manuals included in the Z-SW-SETUP programming software:

Z-MAN-RI-LEZ - user manual for **TEZ** and **LEZ** with **SN**
Z-MAN-RI-LEZ-S - user manual for **TEZ** and **LEZ** with **SF**, **SL**

25.1 External reference and transducer parameters

Allow to configure the axis card reference and transducer inputs, analog or digital, to match the specific application requirements:

- *Scaling parameters* define the correspondence of these signals with the specific actuator stroke or force to be controlled
- *Limit parameters* define maximum/minimum stroke and force to detect possible alarm conditions
- *Homing parameters* define the startup procedure to initialize incremental transducer (e.g. Encoder)

25.2 PID control dynamics parameters

Allow to optimize and adapt the axis card closed loop to the wide range of hydraulic system characteristics:

- *PID parameters* each part of the closed loop algorithm (proportional, integral, derivative, feed forward, fine positioning, etc) can be modified to match the application requirements

25.3 Monitoring parameters

Allow to configure the axis card monitoring function of the positioning error (difference between actual reference and feedback) and detects anomalous conditions:

- *Monitoring parameters* maximum allowed errors can be set for both static and dynamic positioning phases, and dedicated waiting times can be set to delay the activation of the alarm condition and relevant reaction (see 25.4)

25.4 Fault parameters

Allow to configure how the axis card detect and react to alarm conditions:

- *Diagnostics parameters* define different conditions, threshold and delay time to detect alarm conditions
- *Reaction parameters* define different actions to be performed in case of alarm presence (stop at actual or preprogrammed position, emergency forward/backward, axis card disabling, etc.)

25.5 Valve characteristics compensation

Allow to modify the valve regulation to match the actuator/system characteristics and to obtain the best overall performances:

- *Valve parameters* modify the standard valve regulation by means of deadband compensation, curve linearization and differentiated gain for positive and negative regulation

25.6 Motion phases parameters

When the internal reference generation is active a pre-programmed cycle can be generated; start/stop/switch-over commands and reference generation types parameters can be set to design a customized sequence of motion phases adapted to the specific application requirements (see 2.2).

26 FASTENING BOLTS AND SEALS

	DLHZO	DLKZOR
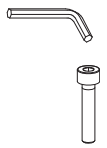	**Fastening bolts:** 4 socket head screws M5x50 class 12.9 Tightening torque = 8 Nm	**Fastening bolts:** 4 socket head screws M6x40 class 12.9 Tightening torque = 15 Nm
	Seals: 4 OR 108; Diameter of ports A, B, P, T: Ø 7,5 mm (max) 1 OR 2025 Diameter of port Y: Ø = 3,2 mm (only for /Y option)	**Seals:** 5 OR 2050; Diameter of ports A, B, P, T: Ø 11,2 mm (max) 1 OR 108 Diameter of port Y: Ø = 5 mm (only for /Y option)

27 INSTALLATION DIMENSIONS [mm]

DLHZO-TEZ

ISO 4401: 2005
Mounting surface: 4401-03-02-0-05 (see table P005)
(for /Y surface 4401-03-03-0-05 without X port)

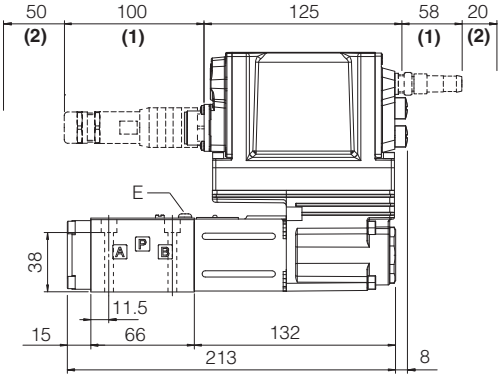

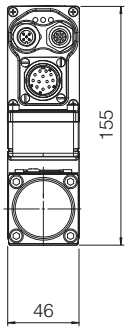

DLHZO	E (air bleeding)	Mass [kg]
all versions	3	2,8

(1) The indicated dimension refers to the longer connectors or Bluetooth adapter
For dimensions of connectors and Bluetooth adapter, see sections 22.6
(2) Space required for connection cable and for connector removal

DLKZOR-TEZ

ISO 4401: 2005
Mounting surface: 4401-05-04-0-05 (see table P005)
(for /Y surface 4401-05-05-0-05 without X port)

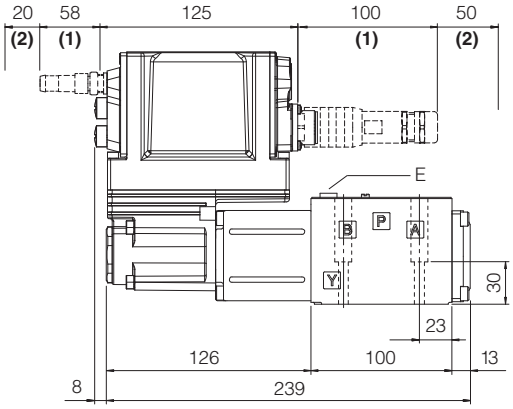

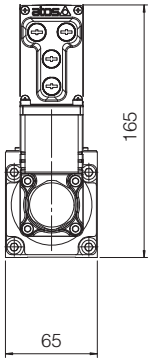

DLKZOR	E (air bleeding)	Mass [kg]
all versions	4 or 13	4,8

(1) The indicated dimension refers to the longer connectors or Bluetooth adapter
For dimensions of connectors and Bluetooth adapter, see sections 22.6
(2) Space required for connection cable and for connector removal

Note: for option /B the proportional solenoid, the LVDT transducer and the on-board digital driver + axis card are at side of port A

28 RELATED DOCUMENTATION

FS001	Basics for digital electrohydraulics	**K800**	Electric and electronic connectors
FS900	Operating and maintenance information for proportional valves	**P005**	Mounting surfaces for electrohydraulic valves
FY100	Safety proportional valves - option /U	**Y010**	Basics for safety components
FY200	Safety proportional valves - option /K	**Z-MAN-RI-LEZ**	TEZ/LEZ user manual
GS500	Programming tools	**Z-MAN-RI-LEZ-S**	TEZ/LEZ with p/Q control user manual
GS510	Fieldbus		

Digital servoproportionals with on-board axis card

direct, double solenoid, with LVDT transducer and zero spool overlap, autotuning

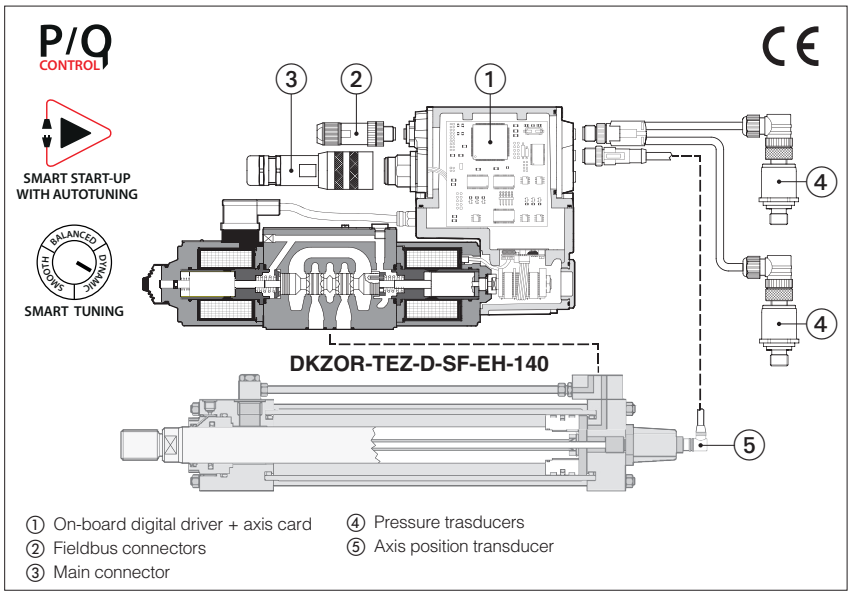

DHZO-TEZ, DKZOR-TEZ

Digital servoproportional directional valves, direct, double solenoid, with on-board digital driver + axis card, LVDT position transducer and zero spool overlap for position closed loop controls of linear or rotative hydraulic actuator. The double solenoid execution grants larger flow capacity and central safety rest position.

The controlled actuator has to be equipped with position transducer (analog, potentiometer, SSI or Encoder) to read the axis position feedback.

Optional alternated p/Q control add the force limitation to position regulation, requiring pressure or force transducers installation.

Smart Start-up procedure makes the commissioning quicker and easier, thanks to the Autotuning and Smart Tuning functionalities. Multiple PID sets allows to easily switch axis behaviour according to machine cycle.

DHZO:	**DKZOR**:
Size: **06** -ISO 4401	Size: **10** -ISO 4401
Max flow: **80 l/min**	Max flow: **180 l/min**
Max pressure: **350 bar**	Max pressure: **315 bar**

1 MODEL CODE

DHZO - TEZ - D - SN - NP - 0 70 - L 5 / * / * / * / *

Servoproportional directional valves, direct
DHZO = size 06
DKZOR = size 10

TEZ = on-board digital driver + axis card, one LVDT transducer

Position transducer type:
A = Analog (standard, potentiometer)
D = Digital (SSI, Encoder)

Alternated p/Q controls, see section 3 :
SN = none
SF = force control (2 pressure transducers)
SL = force control (1 load cell)

Fieldbus interface, USB port always present:
NP = Not Present
BC = CANopen
BP = PROFIBUS DP
EH = EtherCAT
EW = POWERLINK
EI = EtherNet/IP
EP = PROFINET RT/IRT

Valve size ISO 4401:
0 = 06 **1** = 10

Configuration:

Standard

70 =

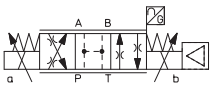

Option **/B**

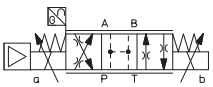

Series number

Seals material, see section 14 :
- = NBR
PE = FKM
BT = NBR low temperature

Safety options TÜV certified **(1)**:
U = safe double power supply
K = safe on/off signals
See section 10

Hydraulic options (1):
B = solenoid with on-board digital driver + axis card and position transducer at side of port A
Y = external drain

Electronic options (1):
C = current feedback for analog position and pressure transducers 4÷20mA
I = current reference input and monitor 4÷20mA

Spool size:		**3** (L)	**5** (L,D)
DHZO	=	18	28
DKZOR	=	45	75

Nominal flow (l/min) at Δp 10bar P-T (see section 12)

Spool type, regulating characteristics, see section 15 :
L = linear
D = differential-progressive
P-A = Q, B-T = Q/2
P-B = Q/2, A-T = Q

(1) For possible combined options, see section 18

2 POSITION CONTROL

2.1 External reference signal

Axis card controls in closed loop the actuator position according to a position reference signal from the machine central unit.

Position profile can be managed in two ways (software selectable):

- Without trajectory generation **(a)**: the axis card receives from the machine central unit the position reference signal and follows it at any given instant
- With trajectory generation **(b)**: the axis card receives from the machine central unit just the final target position and internally generates a position profile limiting acceleration, velocity and deceleration

The position reference signal can be software selected between Analog reference **(c)** and Fieldbus reference **(d)**.

Refer to the axis card user manual for further details on position control features.

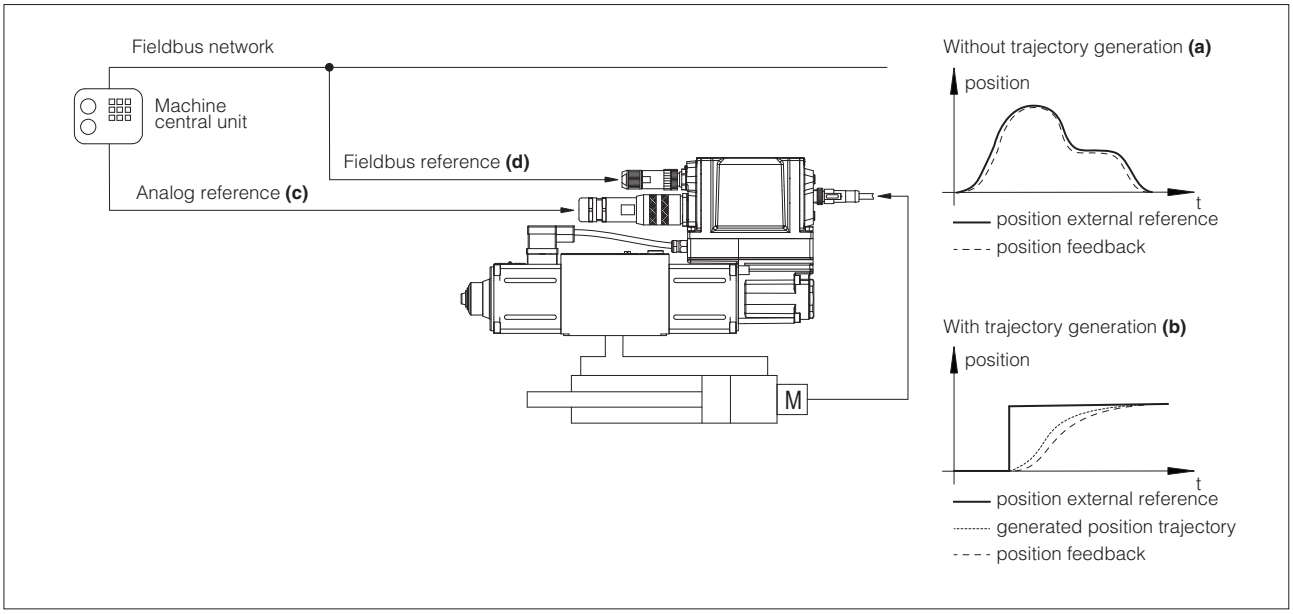

2.2 Automatic cycle

Axis card controls in closed loop the actuator position according to an internally generated automatic cycle: only start, stop and switch-over commands are required from the machine electronic central unit by means On-off commands **(e)** or Fieldbus commands **(f)**.

Atos PC software allows to realize an automatic cycle according to the application requirements. Refer to the axis card user manual for further details on automatic cycle features.

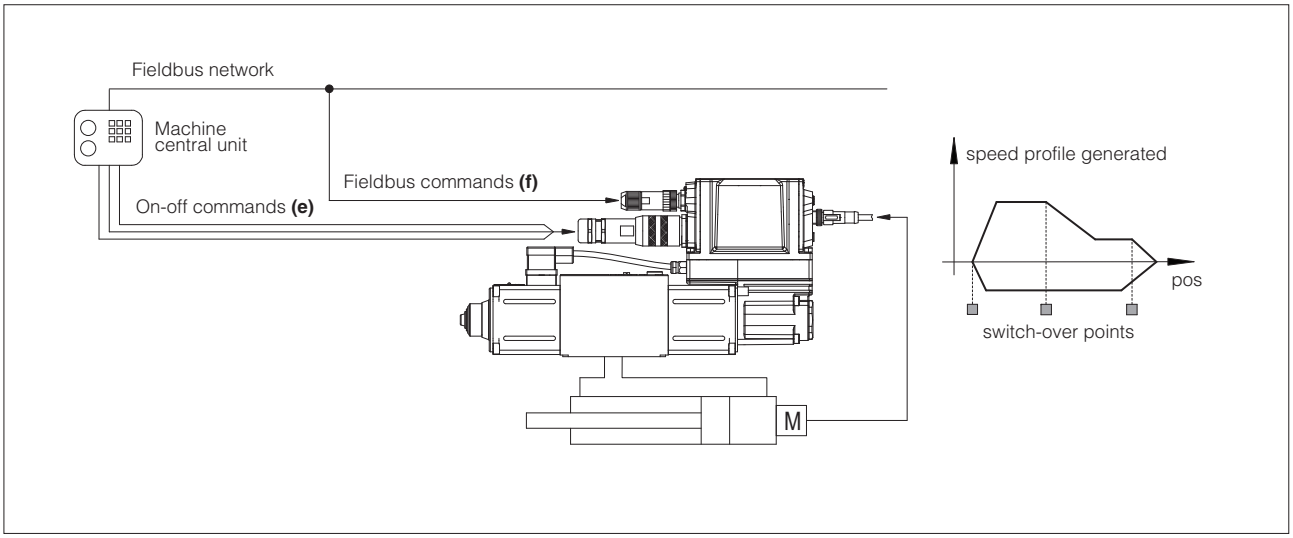

3 ALTERNATED POSITION / FORCE CONTROL

SF and **SL** controls add the alternated force closed loop control to the actuator standard position control. Pressure or force remote transducers have to be installed on the actuator and interfaced to the valve, see below functional schemes.
The position/force controls are operated according to two separate reference signals and a dedicated algorithm automatically selects which control is active time by time.

The dynamics of the switching between the two controls can be regulated thanks to specific software setting, in order to avoid instability and vibrations.

Position control is active (see phase ① and ③ at side) when the actuator force is lower than the relevant reference signal - the valve controls the actuator position by closed-loop regulation.

Force control is active (see phase ② and ④ at side) when the actuator actual force, measured by remote transducers, grows up to the relevant reference signal - the axis card reduces the valve's regulation in order to limit the actuator force; if the force tends to decrease under its reference signal, the position control returns active.

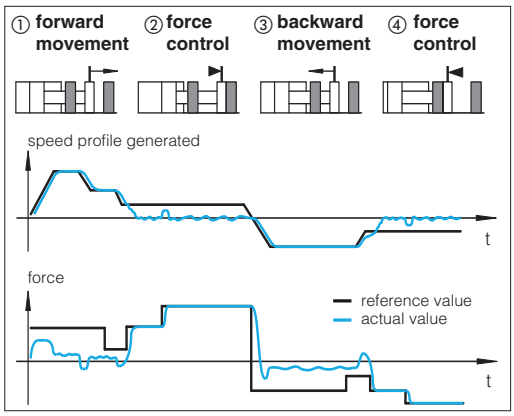

Alternated control configurations

SF	SL
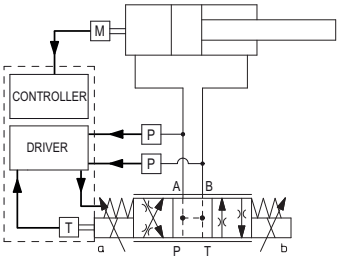	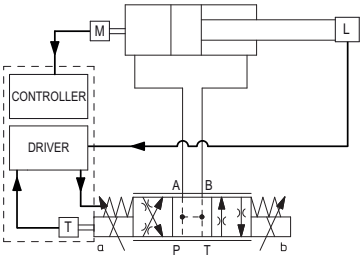
two remote pressure transducers have to be installed on the actuator's ports; the actuator force is calculated by the pressure feedbacks (Pa - Pb)	one load cell transducer has to be installed between the actuator and the controlled load

T valve spool transducer	M actuator position transducer	P pressure transducer	L load cell

SF – position/force control
Adds force control to standard position control and permits to limit the max force in two directions controlling in closed loop the delta pressure acting on both sides of the hydraulic actuator. Two pressure transducers have to be installed on A and B hydraulic lines.

SL – position/force control
Adds force control to standard position control and permits to limit the max force in one or two directions controlling in closed loop the force performed by the hydraulic actuator. A load cell has to be installed on the hydraulic actuator.

General Notes:

- auxiliary check valves are recommended in case of specific hydraulic configuration requirements in absence of power supply or fault
- Atos technical office is available for additional evaluations related to specific applications

4 GENERAL NOTES

Atos digital proportionals valves are CE marked according to the applicable directives (e.g. Immunity and Emission EMC Directive).
Installation, wirings and start-up procedures must be performed according to the general prescriptions shown in tech table **FS900** and in the user manuals included in the Z-SW-SETUP programming software.

5 VALVE SETTINGS AND PROGRAMMING TOOLS - see tech. table **GS500**

Free downloadable software for PC allows to set all valve functional parameters and to access complete diagnostic information of digital axis controls via Bluetooth/USB service port.
Atos Z-SW-SETUP PC software supports all Atos digital axis controls and it is available at www.atos.com in MyAtos area.

⚠ **WARNING: axis card USB port is not isolated!** For E-C-SB-USB/M12 cable, the use of E-A-SB-USB/OPT isolator adapter is highly recommended for PC protection

⚠ **WARNING:** for the list of countries where the Bluetooth adapter has been approved, see tech. table **GS500**

Bluetooth or USB connection

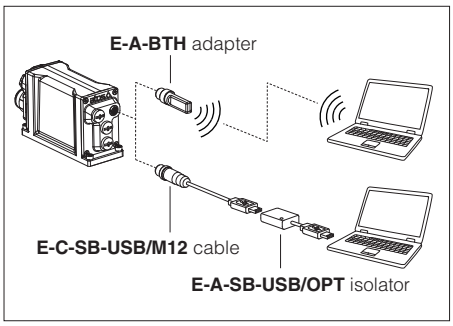

6 SMART START-UP

The automatic procedure supports the user during the commissioning phases of the axis control with guided procedures:

- **General setting**
It assists the user in system data setup, as like cylinder stroke, diameters, load mass, configure analog/digital signals and communication interface, position transducer setup.
- **System check**
It automatically executes position open loop movements to set axis control parameters, position transducer calibration and verify cylinder stroke.
- **Position autotuning**
It automatically determines the optimal PID parametrization of the position control adapting the dynamic response to guarantee control precision and axis stability. Once the procedure is started, the control performs few automatic position open loop movements of the actuator, during which control parameters are calculated and stored.

7 SMART TUNING

Once the Smart Start-up procedure has been completed, the Smart tuning feature allows to further refine the position control response by choosing from 3 different levels of performance in positioning:

- **dynamic** best dynamics and accuracy (default factory setting)
- **balanced** average dynamics and accuracy
- **smooth** attenuated dynamics and accuracy to improve control stability in critical applications or in environments with electrical disturbances

Settings can be changed any time via Z-SW-SETUP software or fieldbus.

If required, control performance can be further customized by modifying PID parameter via Z-SW-SETUP software.

1 = position reference signal
2 = generated position trajectory
3 = dynamic
4 = balanced
5 = smooth

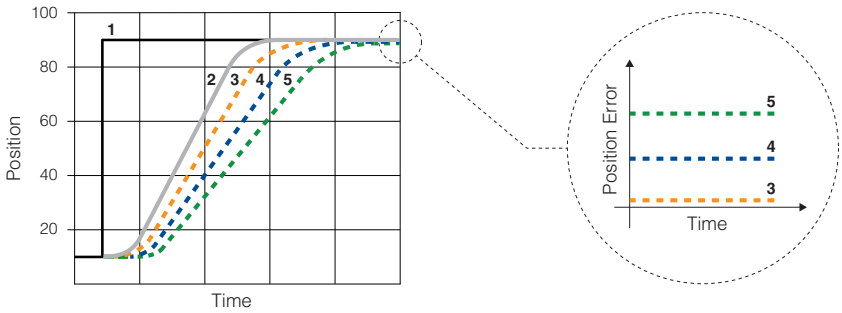

8 MULTIPLE SETS

Multiple PID sets allows to easily switch axis behaviour according to machine cycle, selecting between independent groups of parameters for:

- **position control PID**
- **force control PID and P/Q logics switching criteria**

Settings can be changed any time via Z-SW-SETUP software, fieldbus or digital input signals.

9 FIELDBUS - see tech. table GS510

Fieldbus allows valve direct communication with machine control unit for digital reference, valve diagnostics and settings. These execution allow to operate the valves through fieldbus or analog signals available on the main connector.

10 SAFETY OPTIONS

Atos range of proportional directional valves, provides functional safety options **/U** and **/K** , designed to accomplish a safety function, intended to reduce the risk in process control systems.

They are **TÜV certified** in compliance to **IEC 61508 up to SIL 3 and ISO 13849 up to category 4, PL e**

Safe double power supply, option **/U**: the axis card has separate power supplies for logic and solenoids. The safe condition is reached by cutting the electrical supply to solenoids, while electronics remains active for monitoring functions and fieldbus communication, see tech table **FY100**

Safety function via on/off signals, option **/K**: upon a disable command, the axis card checks the spool position and it provides on-off acknowledgement signal only when the valve is in safe condition, see tech table **FY200**

11 GENERAL CHARACTERISTICS

Assembly position	Any position
Subplate surface finishing to ISO 4401	Acceptable roughness index: Ra ≤0,8, recommended Ra 0,4 – Flatness ratio 0,01/100
MTTFd valves according to EN ISO 13849	150 years, for further details see technical table P007
Ambient temperature range	**Standard** = -20°C ÷ +60°C **/PE** option = -20°C ÷ +60°C **/BT** option = -40°C ÷ +60°C
Storage temperature range	**Standard** = -20°C ÷ +70°C **/PE** option = -20°C ÷ +70°C **/BT** option = -40°C ÷ +70°C
Surface protection	Zinc coating with black passivation, galvanic treatment (driver housing)
Corrosion resistance	Salt spray test (EN ISO 9227) > 200 h
Vibration resistance	See technical table G004
Compliance	CE according to EMC directive 2014/30/EU (Immunity: EN 61000-6-2; Emission: EN 61000-6-3) RoHS Directive 2011/65/EU as last update by 2015/863/EU REACH Regulation (EC) n°1907/2006

12 HYDRAULIC CHARACTERISTICS - based on mineral oil ISO VG 46 at 50 °C

Valve model	**DHZO**			**DKZOR**		
Pressure limits [bar]	ports **P**, **A**, **B** = 350; **T** = 210 (250 with external drain /Y) **Y** = 10			ports **P**, **A**, **B** = 315; **T** = 210 (250 with external drain /Y) **Y** = 10		
Spool type and size	**L3**	**L5**	**D5**	**L3**	**L5**	**D5**
Nominal flow Δp P-T [l/min] **(1)** Δp= 10 bar	18	28	28 **(4)**	45	75	75 **(4)**
Δp= 30 bar	30	50	50 **(4)**	80	130	130 **(4)**
Δp= 70 bar	45	75	75 **(4)**	120	170	170 **(4)**
Max permissible flow **(2)**	50	80	80 **(4)**	130	180	180 **(4)**
Leakage [cm³/min]	<500 (at p = 100 bar); <1500 (at p = 350 bar)			<800 (at p = 100 bar); <2500 (at p = 315 bar)		
Response time **(3)** [ms]	≤ 15			≤ 20		
Hysteresis	≤ 0,2 [% of max regulation]					
Repeatibility	± 0,1 [% of max regulation]					
Thermal drift	zero point displacement < 1% at ΔT = 40°C					

(1) For different Δp, the max flow is in accordance to the diagrams in section 15.2
(2) See detailed diagrams in section 15.3
(3) 0-100% step signal
(4) For spool type D5 the flow value is referred to single path P-A (A-T) at Δp/2 per control edge. The flow P-B (B-T) is 50% of P-A (A-T)

13 ELECTRICAL CHARACTERISTICS

Power supplies	Nominal : +24 VDC Rectified and filtered : VRMS = 20 ÷ 32 VMAX (ripple max 10 % VPP)			
Max power consumption	50 W			
Max. solenoid current	**DHZO** = 2,6 A **DKZOR** = 3 A			
Coil resistance R at 20°C	**DHZO** = 3 ÷ 3,3 Ω **DKZOR** = 3,8 ÷ 4,1 Ω			
Analog input signals	Voltage: range ±10 VDC (24 VMAX tolerant) Input impedance: Ri > 50 kΩ Current: range ±20 mA Input impedance: Ri = 500 Ω			
Monitor outputs	Output range: voltage ±10 VDC @ max 5 mA current ±20 mA @ max 500 Ω load resistance			
Enable input	Range: 0 ÷ 5 VDC (OFF state), 9 ÷ 24 VDC (ON state), 5 ÷ 9 VDC (not accepted); Input impedance: Ri > 10 kΩ			
Fault output	Output range: 0 ÷ 24 VDC (ON state > [power supply - 2 V] ; OFF state < 1 V) @ max 50 mA; external negative voltage not allowed (e.g. due to inductive loads)			
Position transducers power supply	+24 VDC @ max 100 mA and +5 VDC @ max 100 mA are software selectable; ±10 VDC @ max 14 mA minimum load resistance 700 Ω			
Pressure/Force transducer power supply (only for SF, SL)	+24VDC @ max 100 mA (E-ATR-8 see tech table **GS465**)			
Alarms	Solenoid not connected/short circuit, cable break with current reference signal, over/under temperature, valve spool transducer malfunctions, alarms history storage function			
Insulation class	H (180°) Due to the occurring surface temperatures of the solenoid coils, the European standards ISO 13732-1 and EN982 must be taken into account			
Protection degree to DIN EN60529	IP66 / IP67 with mating connectors			
Duty factor	Continuous rating (ED=100%)			
Tropicalization	Tropical coating on electronics PCB			
Additional characteristics	Short circuit protection of solenoid's current supply; 3 leds for diagnostic; protection against reverse polarity of power supply			
Communication interface	USB Atos ASCII coding	CANopen EN50325-4 + DS408	PROFIBUS DP EN50170-2/IEC61158	EtherCAT, POWERLINK, EtherNet/IP, PROFINET IO RT / IRT EC 61158
Communication physical layer	not insulated USB 2.0 + USB OTG	optical insulated CAN ISO11898	optical insulated RS485	Fast Ethernet, insulated 100 Base TX
Recommended wiring cable	LiYCY shielded cables, see section 23			

Note: a maximum time of 800 ms (depending on communication type) has to be considered between the axis card energizing with the 24 VDC power supply and when the valve is ready to operate. During this time the current to the valve coils is switched to zero.

14 SEALS AND HYDRAULIC FLUIDS - for other fluids not included in below table, consult our technical office

Seals, recommended fluid temperature		NBR seals (standard) = -20°C ÷ +60°C, with HFC hydraulic fluids = -20°C ÷ +50°C FKM seals (/PE option) = -20°C ÷ +80°C NBR low temp. seals (/BT option) = -40°C ÷ +60°C, with HFC hydraulic fluids = -20°C ÷ +50°C		
Recommended viscosity		20÷100 mm²/s - max allowed range 15 ÷ 380 mm²/s		
Max fluid contamination level	normal operation	ISO4406 class 18/16/13 NAS1638 class 7		see also filter section at www.atos.com or KTF catalog
	longer life	ISO4406 class 16/14/11 NAS1638 class 5		
Hydraulic fluid		**Suitable seals type**	**Classification**	**Ref. Standard**
Mineral oils		NBR, FKM, NBR low temp.	HL, HLP, HLPD, HVLP, HVLPD	DIN 51524
Flame resistant without water		FKM	HFDU, HFDR	ISO 12922
Flame resistant with water		NBR, NBR low temp.	HFC	

15 DIAGRAMS - based on mineral oil ISO VG 46 at 50 °C

15.1 Regulation diagrams (values measure at Δp 30 bar P-T)

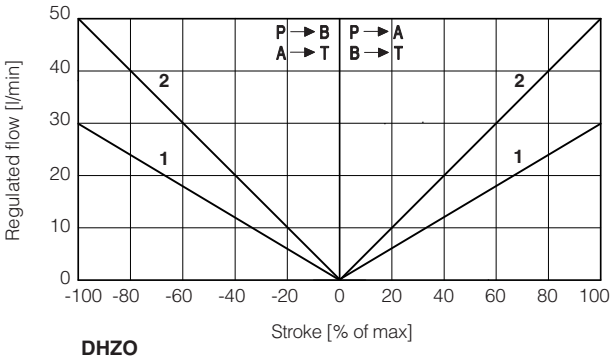

DHZO
1 = L3 **2** = L5

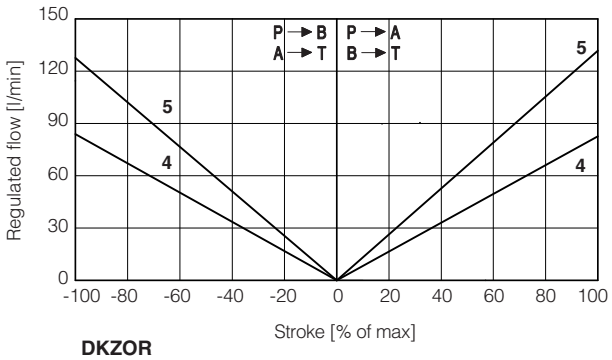

DKZOR
4 = L3 **5** = L5

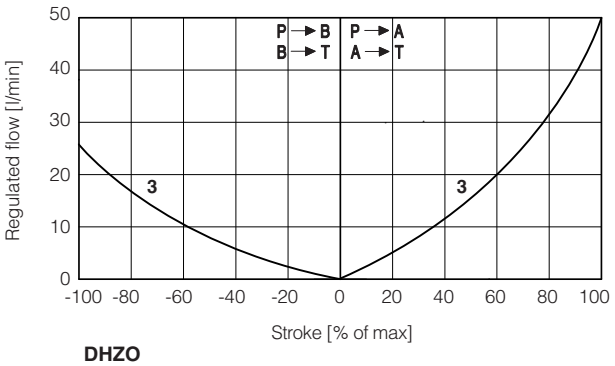

DHZO
3 = D5

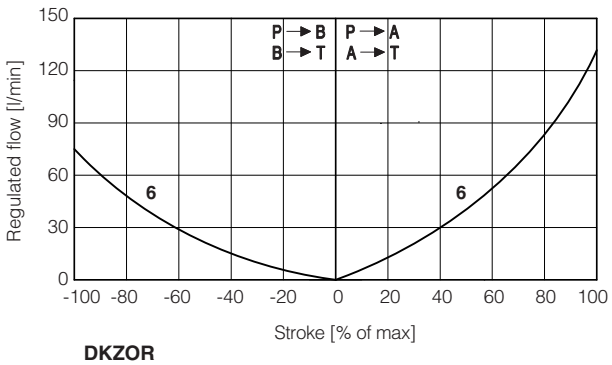

DKZOR
6 = D5

Note:
Hydraulic configuration vs. reference signal for configurations 70 (standard and option /B)

Reference signal $\left.\begin{matrix}0 \div +10\ V \\ 12 \div 20\ mA\end{matrix}\right\}$ P → A / B → T Reference signal $\left.\begin{matrix}0 \div -10\ V \\ 12 \div 4\ mA\end{matrix}\right\}$ P → B / A → T

15.2 Flow /Δp diagrams
stated at 100% of valve stroke

DHZO
1 = spool L3,
2 = spool L5, D5

DKZOR
3 = spool L3
4 = spool L5, D5

DHZO

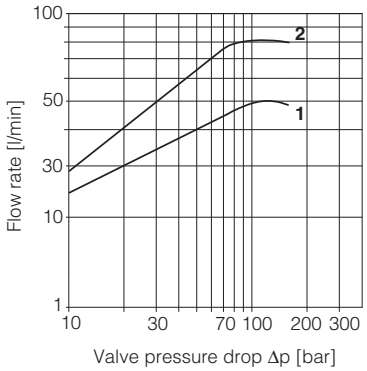

DKZOR

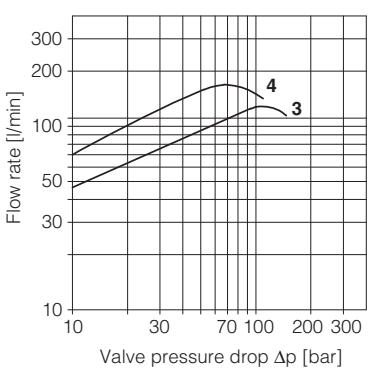

15.3 Operating limits

DHZO
1 = spool L3
2 = spool L5, D5

DKZOR
3 = spool L3
4 = spool L5, D5

DHZO

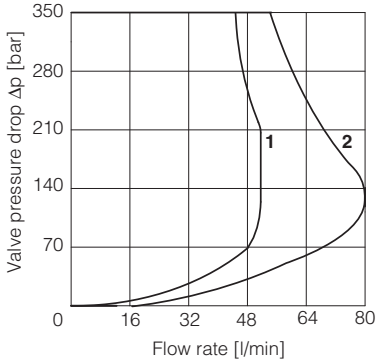

DKZOR

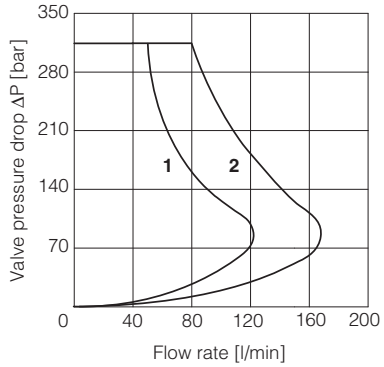

15.4 Valve response time

The valve response times in below diagrams are measured at different steps of the reference input signal. They have to be considered as average values.

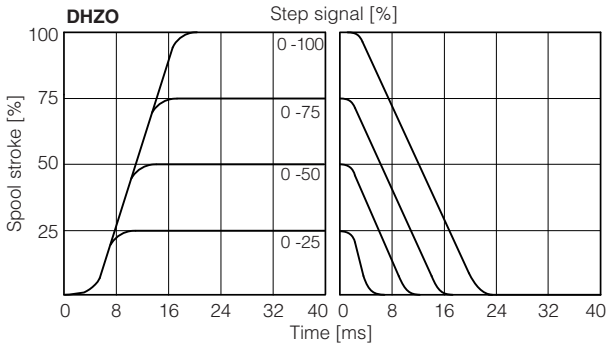

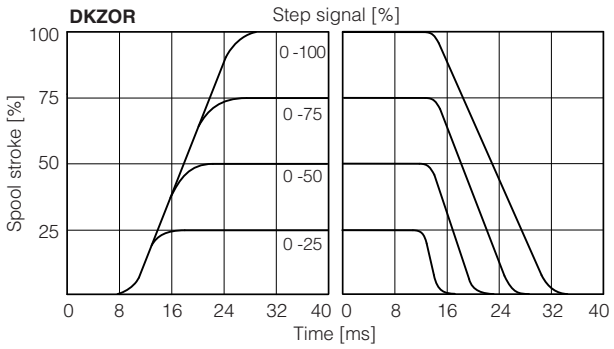

15.5 DHZO Bode diagrams

Stated at nominal hydraulic conditions

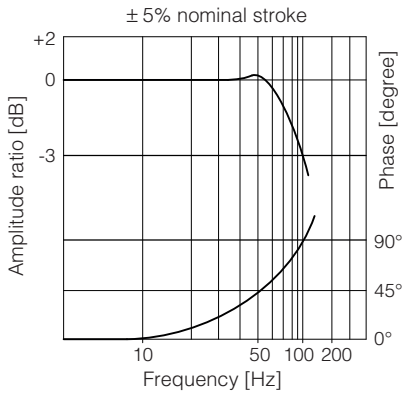

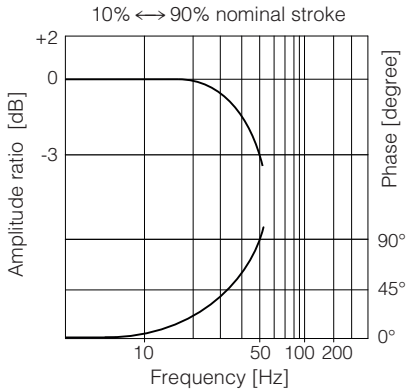

15.6 DKZOR Bode diagrams

Stated at nominal hydraulic conditions

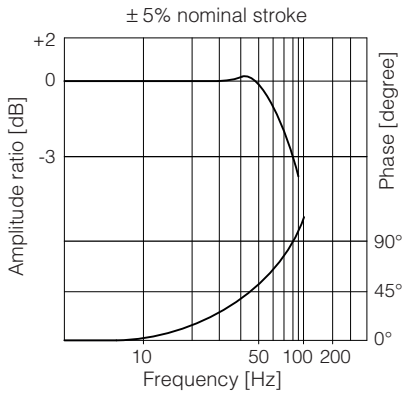

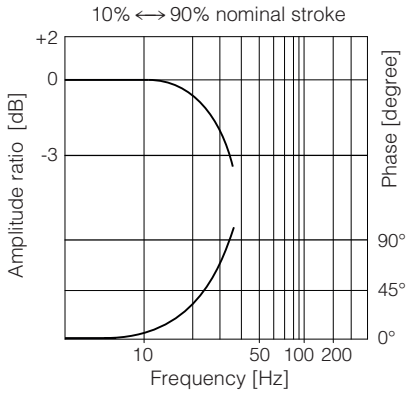

16 HYDRAULIC OPTIONS

B = Solenoid, on-board digital driver + axis card and LVDT position transducer at side of port A.
For hydraulic configuration vs reference signal, see 15.1

Y = This option is mandatory if the pressure in port T exceeds 210 bar.

17 ELECTRONIC OPTIONS

I = This option provides 4 ÷ 20 mA current reference and monitor signals, instead of the standard ±10 VDC.
Input signal can be reconfigured via software selecting between voltage and current, within a maximum range of ±10 VDC or ±20 mA.
It is normally used in case of long distance between the machine control unit and the valve or where the reference signal can be affected by electrical noise; the valve functioning is disabled in case of reference signal cable breakage.

C = This option is available to connect analog position transducer and pressure/force transducers with 4 ÷ 20 mA current output signal, instead of the standard ±10 VDC.
Input signal can be reconfigured via software selecting between voltage and current, within a maximum range of ±10 VDC or ±20 mA.

18 POSSIBLE COMBINED OPTIONS

Standard versions for **D-SN**:
/BI, /BIY, /BY, /IY

Safety certified versions for **D-SN**:
/BI/U, /BIY/U, /B/U, /BY/U, /I/U, /IY/U, /Y/U
/BI/K, /BIY/K, /B/K, /BY/K, /I/K, /IY/K, /Y/K

Standard versions for **A-SN**, **A-SF**, **A-SL** and **D-SF**, **D-SL**:
/BC, /BCI, /BCIY, /BCY, /BI, /BIY, /BY,
/CI, /CIY, /CY,
/IY

Safety certified versions for **A-SN**, **A-SF**, **A-SL** and **D-SF**, **D-SL**:
/BC/U, /BCI/U, /BCIY/U, /BCY/U, /BI/U, /BIY/U, /B/U, /BY/U,
/C/U, /CI/U, /CIY/U, /CY/U, /I/U, /IY/U, /Y/U
/BC/K, /BCI/K, /BCIY/K, /BCY/K, /BI/K, /BIY/K, /B/K, /BY/K,
/C/K, /CI/K, /CIY/K, /CY/K, /I/K, /IY/K, /Y/K

19 POWER SUPPLY AND SIGNALS SPECIFICATIONS

Generic electrical output signals of the valve (e.g. fault or monitor signals) must not be directly used to activate safety functions, like to switch-ON/OFF the machine's safety components, as prescribed by the European standards (Safety requirements of fluid technology systems and components-hydraulics, ISO 4413).
For certified safety options: **/U** see tech. table **FY100** and **/K** see tech. table **FY200**

19.1 Power supply (V+ and V0)

The power supply must be appropriately stabilized or rectified and filtered: apply at least a 10000 μF/40 V capacitance to single phase rectifiers or a 4700 μF/40 V capacitance to three phase rectifiers. In case of separate power supply see 19.2.

⚠ A safety fuse is required in series to each power supply: 2,5 A time lag fuse.

19.2 Power supply for axis card logic and communication (VL+ and VL0)

The power supply for axis card logic and communication must be appropriately stabilized or rectified and filtered: apply at least a 10000 μF/40 V capacitance to single phase rectifiers or a 4700 μF/40 V capacitance to three phase rectifiers.
The separate power supply for axis card logic on pin 9 and 10, allow to remove solenoid power supply from pin 1 and 2 maintaining active the diagnostics, USB and fieldbus communications.

⚠ A safety fuse is required in series to each axis card logic and communication power supply: 500 mA fast fuse.

19.3 Position reference input signal (P_INPUT+)

Functionality of P_INPUT+ signal (pin 4), depends on axis card reference mode, see section 2 :

external analog reference (see 2.1): input is used as reference for control in closed loop the actuator position.
Reference input signal is factory preset according to selected valve code, defaults are ±10 VDC for standard and 4 ÷ 20 mA for /I option.
Input signal can be reconfigured via software selecting between voltage and current, within a maximum range of ±10 VDC or ± 20 mA.

external fieldbus reference (see 2.1) *or automatic cycle* (see 2.2)*:* analog reference input signal can be used as on-off commands with input range 0 ÷ 24 VDC.

19.4 Force reference input signal (F_INPUT+) - only for SF, SL

Functionality of F_INPUT+ signal (pin 7), depends on selected axis card reference mode and alternated control options, see section 3 :

SL, SF controls and external analog reference selected : input is used as reference for the axis card force closed loop.
Reference input signal is factory preset according to selected valve code, defaults are ±10 VDC for standard and 4 ÷ 20 mA for /I option.
Input signal can be reconfigured via software selecting between voltage and current, within a maximum range of ±10 VDC or ± 20 mA.

SN control or fieldbus reference selected: analog reference input signal can be used as on-off commands with input range 0 ÷ 24VDC.

19.5 Position monitor output signal (P_MONITOR)

The axis card generates an analog output signal proportional to the actual axis position; the monitor output signal can be software set to show other signals available in the axis card (e.g. analog reference, fieldbus reference, position error, valve spool position).
Monitor output signal is factory preset according to selected valve code, defaults are ±10 VDC for standard and 4 ÷ 20 mA for /I option.
Output signal can be reconfigured via software selecting between voltage and current, within a maximum range of ±10 VDC or ± 20 mA.

19.6 Force monitor output signal (F_MONITOR) - only for SF, SL

The axis card generates an analog output signal according to alternated force control option:
SN control: output signal is proportional to the actual valve spool position
SL, SF controls: output signal is proportional to the actual forcel applied to the cylinder's rod end
Monitor output signals can be software set to show other signals available in the axis card (e.g. analog reference, force reference).
The output range and polarity are software selectable within the maximum range ±10 VDC or ±20 mA.
Monitor output signal is factory preset according to selected valve code, defaults are ±10 VDC for standard and 4 ÷ 20 mA for /I option.
Output signal can be reconfigured via software selecting between voltage and current, within a maximum range of ±10 VDC or ± 20 mA.

19.7 Enable input signal (ENABLE)

To enable the axis card, a 24VDC voltage has to be applied on pin 3.
When the Enable signal is set to zero the axis card can be software set to perform one of the following actions:
- maintain the actuator actual position in close loop control
- move towards a predefined position in closed loop control and maintains the reached position (hold position)
- move forward or backward in open loop (only the valve's closed loop remain active)

19.8 Fault output signal (FAULT)

Fault output signal indicates fault conditions of the axis card (solenoid short circuits/not connected, reference or transducer signal cable broken, maximum error exceeded, etc.). Fault presence corresponds to 0 VDC, normal working corresponds to 24 VDC.
Fault status is not affected by the Enable input signal.
Fault output signal can be used as digital output by software selection.

19.9 Position transducer input signal

A position transducer must be always directly connected to the axis card. Select the correct axis card execution depending on the desired transducer interface: digital SSI or Encoder (D execution), potentiometer or a generic transducer with analog interface (A execution).
Position digital input signal is factory preset to binary SSI, it can be reconfigured via software selecting between binary/gray SSI and Encoder.
Position analog input signal is factory preset according to selected valve code, defaults are ±10 VDC for standard and 4 ÷ 20 mA for /C option.
Input signal can be reconfigured via software selecting between voltage and current, within a maximum range of ±10 VDC or ± 20 mA.
Refer to position transducer characteristics to select the transducer type according to specific application requirements (see 20.1).

19.10 Remote pressure/force transducer input signals - only for SF, SL

Analog remote pressure transducers or load cell can be directly connected to the axis card.
Analog input signal is factory preset according to selected valve code, defaults are ±10 VDC for standard and 4 ÷ 20 mA for /C option.
Input signal can be reconfigured via software selecting between voltage and current, within a maximum range of ±10 VDC or ± 20 mA.
Refer to pressure/force transducer characteristics to select the transducer type according to specific application requirements (see 20.2).

20 ACTUATOR'S TRANSDUCER CHARACTERISTICS

20.1 Position transducers

The accuracy of the position control is strongly dependent to the selected position transducer. Four different transducer interfaces are available on the axis cards, depending to the system requirements: potentiometer or analog signal (A execution), SSI or Encoder (D execution).
Transducers with digital interface allow high resolution and accurate measures, that combined with fieldbus communication grants highest performances.
Transducers with analog interface grant simple and cost effective solutions.

20.2 Pressure/force transducers

The accuracy of the force control is strongly dependent to the selected pressure/force transducer, see section 3 .
Alternated force controls require to install pressure transducers or load cell to measure the actual pressure/force values.
Pressure transducers allow easy system integration and cost effective solution for alternated position/force controls (see tech table **GS465** for pressure transducers details).
Load cell transducers allow the user to get high accuracy and precise regulations for alternated position/force control.
The characteristics of the remote pressure/force transducers must be always selected to match the application requirements and to obtain the best performances: transducer nominal range should be at least 115%÷120% of the maximum regulated pressure/force.

20.3 Transducers characteristics & interfaces - following values are just for reference, for details please consult the transducer's datasheet

	Position				**Pressure/Force**
Execution	**A**		**D**		**SF, SL**
Input type	Potentiometer	Analog	SSI **(3)**	Incremental Encoder	Analog
Power supply **(1)**	10 ÷ 30 VDC	+24 VDC	+24 VDC	+5 VDC / +24 VDC	+24 VDC
Axis card interface	0 ÷ 10 V	0 ÷ 10V 4 ÷ 20 mA	Serial SSI binary/gray	TTL 5Vpp - 150 KHz	±10 VDC 4 ÷ 20 mA
Max speed	0,5 m/s	1 m/s	1 m/s	2 m/s	-
Max resolution	< 0.4 % FS	< 0.2 % FS	5 µm	1 µm (@ 0.15 m/s)	< 0.4 % FS
Linearity error **(2)**	± 0.1% FS	< ±0.02% FS	< ± 0.02 % FS	< ± 0.001 % FS	< ±0.25% FS
Repeatability **(2)**	± 0.05% FS	< ± 0.005% FS	< ± 0.005 % FS	< ± 0.001 % FS	< ±0.1% FS

(1) Power supply provided by Atos axis card **(2)** Percentage of total stroke **(3)** For Balluff BTL7 with SSI interface only special code SA433 is supported

21 ELECTRONIC CONNECTIONS

For electronic connection of certified safety options **/U** see tech. table **FY100** and **/K** see tech. table **FY200**

21.1 Main connector - 12 pin (A)

PIN	SIGNAL	TECHNICAL SPECIFICATIONS	NOTES
1	**V+**	Power supply 24 VDC	Input - power supply
2	**V0**	Power supply 0 VDC	Gnd - power supply
3	**ENABLE**	Enable (24 VDC) or disable (0 VDC) the axis card, referred to VL0	Input - on/off signal
4	**P_INPUT+**	Position reference input signal: ±10 VDC / ±20 mA maximum range	Input - analog signal **Software selectable**
5	**INPUT-**	Negative reference input signal for P_INPUT+ and F_INPUT+	Gnd - analog signal
6	**P_MONITOR**	Position monitor output signal: ±10 VDC / ±20 mA maximum range, referred to VL0	Output - analog signal **Software selectable**
7	**F_INPUT+**	Force reference input signal (SF, SL controls): ±10 VDC / ±20 mA maximum range	Input - analog signal **Software selectable**
8	**F_MONITOR**	Force (SF, SL controls) or valve spool position (SN control) monitor output signal: ±10 VDC / ±20mA maximum range, referred to VL0	Output - analog signal **Software selectable**
9	**VL+**	Power supply 24 VDC for axis card logic and communication	Input - power supply
10	**VL0** (1)	Power supply 0 VDC for axis card logic and communication	Gnd - power supply
11	**FAULT**	Fault (0 VDC) or normal working (24 VDC), referred to VL0	Output - on/off signal
PE	**EARTH**	Internally connected to axis card housing	

(1) Do not disconnect VL0 before VL+ when the axis card is connected to PC USB port

21.2 Communication connectors (B) - (C)

(B) **USB connector - M12 - 5 pin** always present		
PIN	**SIGNAL**	**TECHNICAL SPECIFICATION** (1)
1	**+5V_USB**	Power supply
2	**ID**	Identification
3	**GND_USB**	Signal zero data line
4	**D-**	Data line -
5	**D+**	Data line +

(C1) (C2) **BC fieldbus execution, connector - M12 - 5 pin**		
PIN	**SIGNAL**	**TECHNICAL SPECIFICATION** (1)
1	**CAN_SHLD**	Shield
2	**not used**	(C1) - (C2) pass-through connection (2)
3	**CAN_GND**	Signal zero data line
4	**CAN_H**	Bus line (high)
5	**CAN_L**	Bus line (low)

(C1) (C2) **BP fieldbus execution, connector - M12 - 5 pin**		
PIN	**SIGNAL**	**TECHNICAL SPECIFICATION** (1)
1	**+5V**	Termination supply signal
2	**LINE-A**	Bus line (high)
3	**DGND**	Data line and termination signal zero
4	**LINE-B**	Bus line (low)
5	**SHIELD**	

(C1) (C2) **EH, EW, EI, EP fieldbus execution, connector - M12 - 4 pin**		
PIN	**SIGNAL**	**TECHNICAL SPECIFICATION** (1)
1	**TX+**	Transmitter
2	**RX+**	Receiver
3	**TX-**	Transmitter
4	**RX-**	Receiver
Housing	**SHIELD**	

(1) Shield connection on connector's housing is recommended

(2) Pin 2 can be fed with external +5V supply of CAN interface

21.3 Remote pressure/force transducer connector - M12 - 5 pin - only for **SF, SL** (D)

PIN	SIGNAL	TECHNICAL SPECIFICATION	NOTES	(D1) SL - Single transducer (1)		(D2) SF - Double transducers (1)	
				Voltage	Current	Voltage	Current
1	**VF +24V**	Power supply +24VDC	Output - power supply	Connect	Connect	Connect	Connect
2	**TR1**	1st signal transducer: ±10 VDC / ±20 mA maximum range	Input - analog signal **Software selectable**	Connect	Connect	Connect	Connect
3	**AGND**	Common gnd for transducer power and signals	Common gnd	Connect	/	Connect	/
4	**TR2**	2nd signal transducer: ±10 VDC / ±20 mA maximum range	Input - analog signal **Software selectable**	/	/	Connect	Connect
5	**NC**	Not connect		/	/	/	/

(1) Single/double transducer configuration is software selectable

Remote pressure transducers connection - example

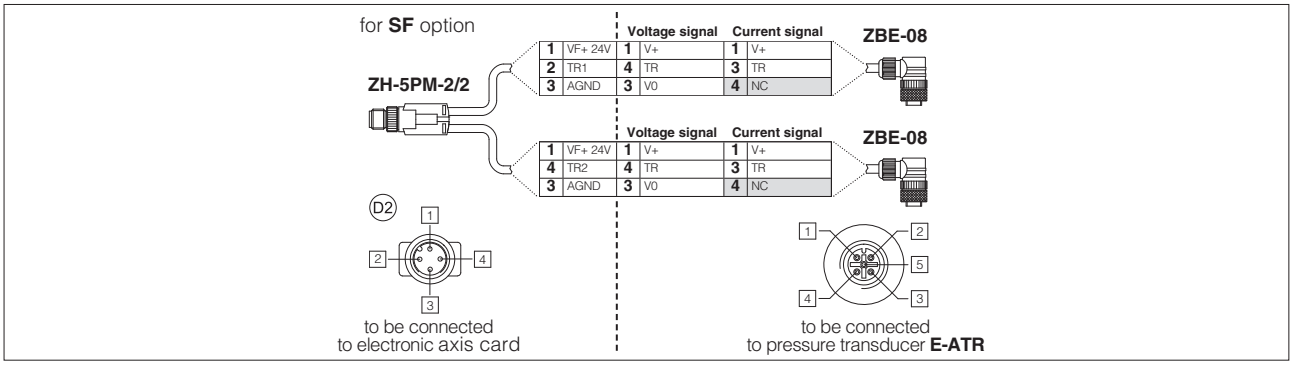

Note: pin layout always referred to axis card view

21.4 D execution - Digital position transducers connector - M12 - 8 pin (E1)

	SSI - default transducer (1)			Encoder (1)		
PIN	SIGNAL	TECHNICAL SPECIFICATION	NOTES	SIGNAL	TECHNICAL SPECIFICATION	NOTES
1	**CLOCK+**	Serial syncronous clock (+)	Input - digital signal	**R**	Input channel R	Input - digital signal
2	**CLOCK-**	Serial syncronous clock (-)		**/R**	Input channel /R	
3	**DATA+**	Serial position data (+)		**A**	Input channel A	
4	**DATA-**	Serial position data (-)		**/A**	Input channel /A	
5	**NC**	Not connect	Do not connect	**B**	Input channel B	
6	**NC**			**/B**	Input channel /B	
7	**VP**	Power supply: +24VDC , +5VDC or OFF (default OFF)	Output - power supply **Software selectable**	**VP**	Power supply: +24VDC , +5VDC or OFF (default OFF)	Output - power supply **Software selectable**
8	**0 V**	Common gnd for transducer power and signals	Common gnd	**0 V**	Common gnd for transducer power and signals	Common gnd

(1) Digital position transducer type is software selectable: Encoder or SSI, see 19.9

SSI connection - example

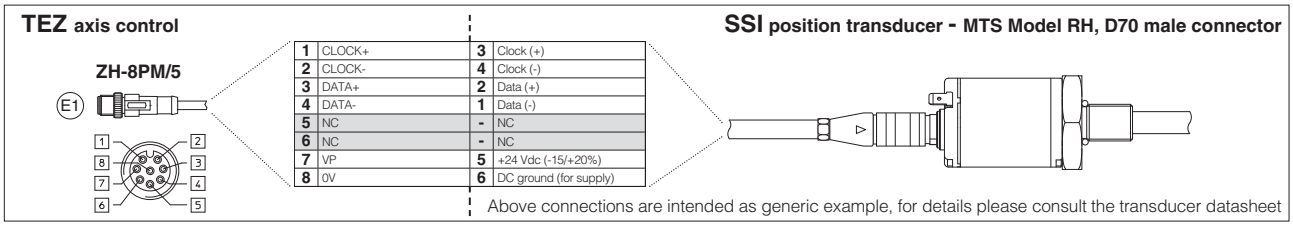

Note: pin layout referred to axis card view

Encoder connection - example

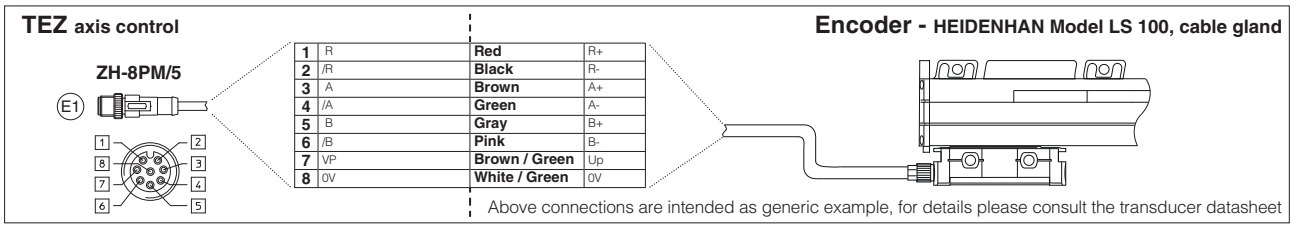

Note: pin layout referred to axis card view

21.5 A execution - Analog position transducers connector - M12 - 5 pin (E2)

PIN	SIGNAL	TECHNICAL SPECIFICATION	NOTES	Potentiometer	Analog
1	**VP +24V**	Power supply: +24VDC or OFF (default OFF)	Output - power supply **Software selectable**	/	Connect
2	**VP +10V**	Power supply reference +10VDC (always present)	Output - power supply	Connect	/
3	**AGND**	Common gnd for transducer power and signals	Common gnd	Connect	Connect
4	**TR**	Signal transducer	Input - analog signal	Connect	Connect
5	**VP -10V**	Power supply reference -10VDC (always present)	Output - power supply	Connect	/

Note: analog input range is software selectable, see 19.9

21.6 TEZ connections layout

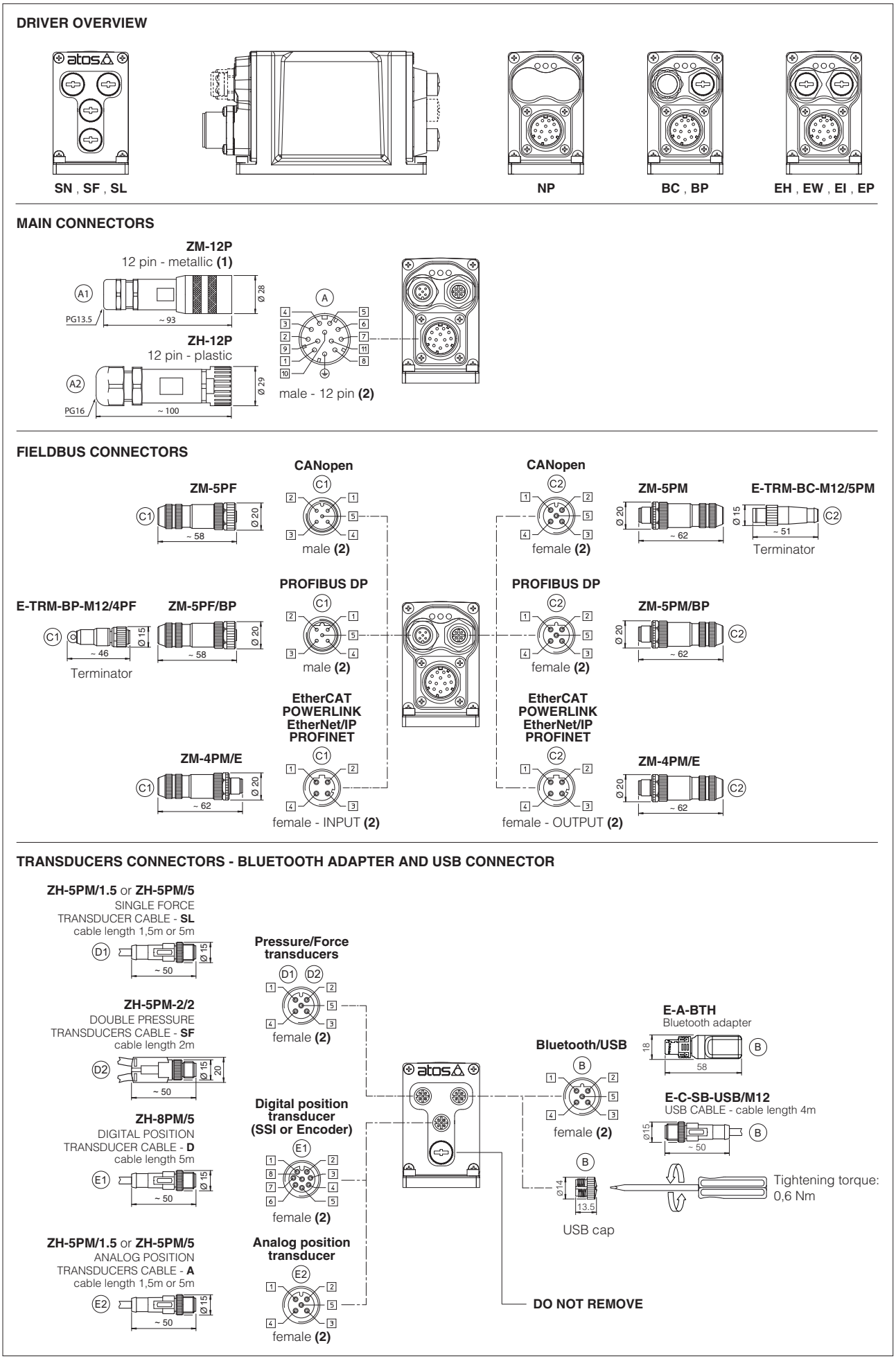

(1) Use of metallic connectors is strongly recommended in order to fulfill EMC requirements **(2)** Pin layout always referred to driver's view

21.7 Diagnostic LEDs (L)

Three leds show axis card operative conditions for immediate basic diagnostics. Please refer to the axis card user manual for detailed information.

FIELDBUS / LEDS	NP Not Present	BC CANopen	BP PROFIBUS DP	EH EtherCAT	EW POWERLINK	EI EtherNet/IP	EP PROFINET
L1	VALVE STATUS			LINK/ACT			
L2	NETWORK STATUS			NETWORK STATUS			
L3	SOLENOID STATUS			LINK/ACT			

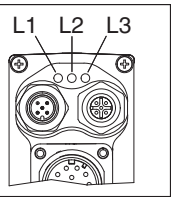

22 IN / OUT FIELDBUS COMMUNICATION CONNECTORS

Two fieldbus communication connectors are always available for digital axis card executions BC, BP, EH, EW, EI, EP. This features allows considerable technical advantages in terms of installation simplicity, wirings reduction and also avoid the usage expensive T-connectors.
For BC and BP executions the fieldbus connectors have an internal pass-through connection and can be used like end point of the fieldbus network, using an external terminator (see tech table **GS500**).
For EH, EW, EI and EP execution the external terminators are not required: each connector is internally terminated.

BC and BP pass-through connection

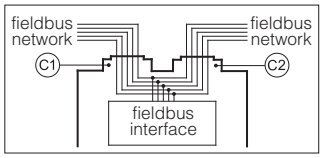

23 CONNECTORS CHARACTERISTICS - to be ordered separately

23.1 Main connectors

CONNECTOR TYPE	POWER SUPPLY AND SIGNALS	POWER SUPPLY AND SIGNALS
CODE	(A1) **ZM-12P**	(A2) **ZH-12P**
Type	12pin female straight circular	12pin female straight circular
Standard	DIN 43651	DIN 43651
Material	Metallic	Plastic reinforced with fiber glass
Cable gland	PG13,5	PG16
Recommended cable	LiYCY 12 x 0,75 mm² max 20 m (logic and power supply)	LiYCY 10 x 0,14mm² max 40 m (logic) LiYY 3 x 1mm² max 40 m (power supply)
Conductor size	0,5 mm² to 1,5 mm² - available for 12 wires	0,14 mm² to 0,5 mm² - available for 9 wires 0,5 mm² to 1,5 mm² - available for 3 wires
Connection type	to crimp	to crimp
Protection (EN 60529)	IP 67	IP 67

23.2 Fieldbus communication connectors

CONNECTOR TYPE	BC CANopen (1)		BP PROFIBUS DP (1)		EH EtherCAT, EW POWERLINK, EI EtherNet/IP, EP PROFINET (2)
CODE	(C1) **ZM-5PF**	(C2) **ZM-5PM**	(C1) **ZM-5PF/BP**	(C2) **ZM-5PM/BP**	(C1) (C2) **ZM-4PM/E**
Type	5 pin female straight circular	5 pin male straight circular	5 pin female straight circular	5 pin male straight circular	4 pin male straight circular
Standard	M12 coding A – IEC 61076-2-101		M12 coding B – IEC 61076-2-101		M12 coding D – IEC 61076-2-101
Material	Metallic		Metallic		Metallic
Cable gland	Pressure nut - cable diameter 6÷8 mm		Pressure nut - cable diameter 6÷8 mm		Pressure nut - cable diameter 4÷8 mm
Cable	CANbus Standard (DR 303-1)		PROFIBUS DP Standard		Ethernet standard CAT-5
Connection type	screw terminal		screw terminal		terminal block
Protection (EN 60529)	IP67		IP 67		IP 67

(1) E-TRM-** terminators can be ordered separately, see tech table **GS500**

(2) Internally terminated

23.3 Pressure/Force transducer connectors - only for **SF, SL**

CONNECTOR TYPE	SL - Single transducer		SF - Double transducers
CODE	(D1) **ZH-5PM/1.5**	(D1) **ZH-5PM/5**	(D2) **ZH-5PM-2/2**
Type	5 pin male straight circular		4 pin male straight circular
Standard	M12 coding A – IEC 61076-2-101		M12 coding A – IEC 61076-2-101
Material	Plastic		Plastic
Cable gland	Connector moulded on cables 1,5 m length	5 m length	Connector moulded on cables 2 m length
Cable	5 x 0,25 mm²		3 x 0,25 mm² (both cables)
Connection type	molded cable		splitting cable
Protection (EN 60529)	IP 67		IP 67

23.4 Position transducer connectors

CONNECTOR TYPE	DIGITAL POSITION TRANSDUCER D execution - see 21.4	ANALOG POSITION TRANSDUCER A execution - see 21.5	
CODE	(E1) **ZH-8PM/5**	(E2) **ZH-5PM/1.5**	(E2) **ZH-5PM/5**
Type	8 pin male straight circular	5 pin male straight circular	
Standard	M12 coding A – IEC 61076-2-101	M12 coding A – IEC 61076-2-101	
Material	Plastic	Plastic	
Cable gland	Connector moulded on cables 5 m length	Connector moulded on cables 1,5 m length	5 m length
Cable	8 x 0,25 mm²	5 x 0,25 mm²	
Connection type	molded cable	molded cable	
Protection (EN 60529)	IP 67	IP 67	

24 MAIN SOFTWARE PARAMETER SETTINGS

For a detailed descriptions of the available settings, wirings and installation procedures, please refer to the user manuals included in the Z-SW-SETUP programming software:

Z-MAN-RI-LEZ - user manual for **TEZ** and **LEZ** with **SN**
Z-MAN-RI-LEZ-S - user manual for **TEZ** and **LEZ** with **SF**, **SL**

24.1 External reference and transducer parameters

Allow to configure the axis card reference and transducer inputs, analog or digital, to match the specific application requirements:

- *Scaling parameters* define the correspondence of these signals with the specific actuator stroke or force to be controlled
- *Limit parameters* define maximum/minimum stroke and force to detect possible alarm conditions
- *Homing parameters* define the startup procedure to initialize incremental transducer (e.g. Encoder)

24.2 PID control dynamics parameters

Allow to optimize and adapt the axis card closed loop to the wide range of hydraulic system characteristics:

- *PID parameters* each part of the closed loop algorithm (proportional, integral, derivative, feed forward, fine positioning, etc) can be modified to match the application requirements

24.3 Monitoring parameters

Allow to configure the axis card monitoring function of the positioning error (difference between actual reference and feedback) and detects anomalous conditions:

- *Monitoring parameters* maximum allowed errors can be set for both static and dynamic positioning phases, and dedicated waiting times can be set to delay the activation of the alarm condition and relevant reaction (see 24.4)

24.4 Fault parameters

Allow to configure how the axis card detect and react to alarm conditions:

- *Diagnostics parameters* define different conditions, threshold and delay time to detect alarm conditions
- *Reaction parameters* define different actions to be performed in case of alarm presence (stop at actual or preprogrammed position, emergency forward/backward, axis card disabling, etc.)

24.5 Valve characteristics compensation

Allow to modify the valve regulation to match the actuator/system characteristics and to obtain the best overall performances:

- *Valve parameters* modify the standard valve regulation by means of deadband compensation, curve linearization and differentiated gain for positive and negative regulation

24.6 Motion phases parameters

When the internal reference generation is active a pre-programmed cycle can be generated; start/stop/switch-over commands and reference generation types parameters can be set to design a customized sequence of motion phases adapted to the specific application requirements (see 2.2).

25 FASTENING BOLTS AND SEALS

	DHZO	DKZOR
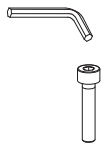	**Fastening bolts:** 4 socket head screws M5x50 class 12.9 Tightening torque = 8 Nm	**Fastening bolts:** 4 socket head screws M6x40 class 12.9 Tightening torque = 15 Nm
	Seals: 4 OR 108; Diameter of ports A, B, P, T: Ø 7,5 mm (max) 1 OR 2025 Diameter of port Y: Ø = 3,2 mm (only for /Y option)	**Seals:** 5 OR 2050; Diameter of ports A, B, P, T: Ø 11,2 mm (max) 1 OR 108 Diameter of port Y: Ø = 5 mm (only for /Y option)

26 INSTALLATION DIMENSIONS [mm]

DHZO-TEZ

ISO 4401: 2005
Mounting surface: 4401-03-02-0-05 (see table P005)
(for /Y surface 4401-03-03-0-05 without X port)

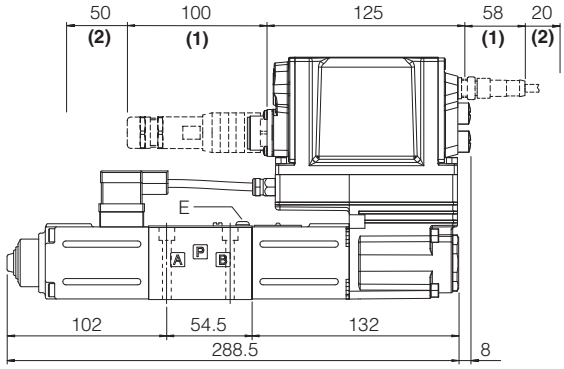

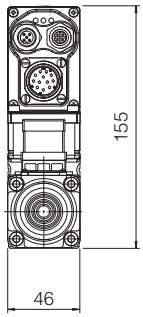

DHZO	E (air bleeding)	Mass [kg]
all versions	3	3,5

(1) The indicated dimension refers to the longer connectors or Bluetooth adapter
For dimensions of connectors and Bluetooth adapter, see sections 21.6
(2) Space required for connection cable and for connector removal

DKZOR-TEZ

ISO 4401: 2005
Mounting surface: 4401-05-04-0-05 (see table P005)
(for /Y surface 4401-05-05-0-05 without X port)

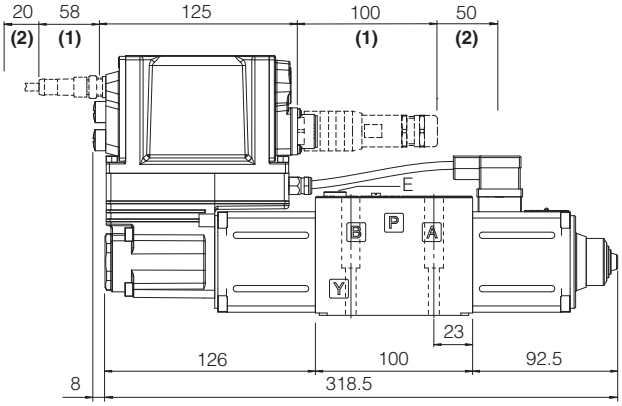

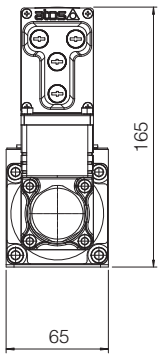

DKZOR	E (air bleeding)	Mass [kg]
all versions	4 or 13	5,4

(1) The indicated dimension refers to the longer connectors or Bluetooth adapter
For dimensions of connectors and Bluetooth adapter, see sections 21.6
(2) Space required for connection cable and for connector removal

Note: for option /B the proportional solenoid, the LVDT transducer and the on-board digital driver + axis card are at side of port A

28 RELATED DOCUMENTATION

FS001	Basics for digital electrohydraulics
FS900	Operating and maintenance information for proportional valves
FY100	Safety proportional valves - option /U
FY200	Safety proportional valves - option /K
GS500	Programming tools
GS510	Fieldbus
K800	Electric and electronic connectors
P005	Mounting surfaces for electrohydraulic valves
Y010	Basics for safety components
Z-MAN-RI-LEZ	TEZ/LEZ user manual
Z-MAN-RI-LEZ-S	TEZ/LEZ with p/Q control user manual

Digital servoproportionals with on-board axis card

piloted, single solenoid, with two LVDT transducers and zero spool overlap, autotuning

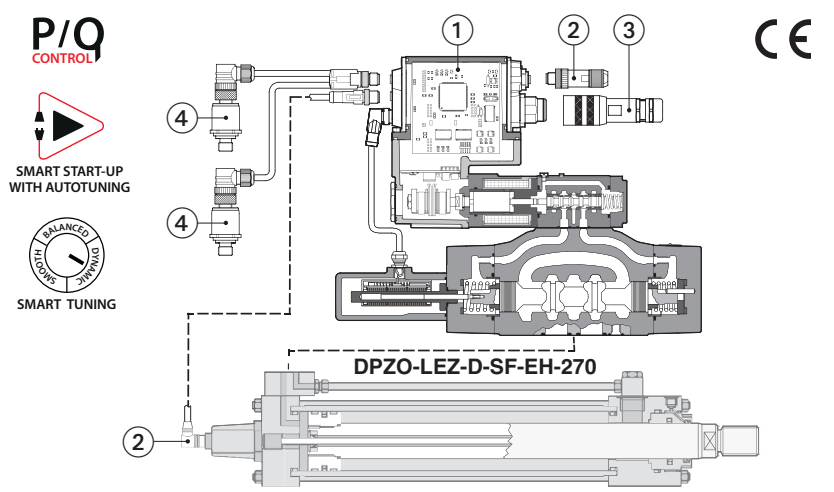

① On-board digital driver + axis card
② Fieldbus connectors
③ Main connector
④ Pressure trasducers
⑤ Axis position transducer

DPZO-LEZ

Digital servoproportional directional valves, piloted, single solenoid, with on-board digital driver + axis card, two LVDT position transducers and zero spool overlap for position closed loop controls of linear or rotative hydraulic actuator.

The controlled actuator has to be equipped with position transducer (analog, potentiometer, SSI or Encoder) to read the axis position feedback.

The valve can be operated via an external reference signal or automatic cycle, see section 2.

Optional alternated p/Q control add the force limitation to position regulation, requiring pressure or force transducers installation.

Smart Start-up procedure makes the commissioning quicker and easier, thanks to the Autotuning and Smart Tuning functionalities. Multiple PID sets allows to easily switch axis behaviour according to machine cycle.

Size: **10** ÷ **35** - ISO 4401
Max flow: **180** ÷ **3500 l/min**
Max pressure: **350 bar**

1 MODEL CODE

DPZO - **LEZ** - **D** - **SN** - **NP** - **2** **70** - **L** **5** / * / * / * / *

Servoproportional directional valves, piloted

LEZ = on-board digital driver + axis card, two LVDT transducers

Position transducer type:
A = Analog (standard, potentiometer)
D = Digital (SSI, Encoder)

Alternated p/Q controls, see section 3 :
SN = none
SF = force control (2 pressure transducers)
SL = force control (1 load cell)

Fieldbus interface, USB port always present:
NP = Not Present
BC = CANopen **EW** = POWERLINK
BP = PROFIBUS DP **EI** = EtherNet/IP
EH = EtherCAT **EP** = PROFINET RT/IRT

Valve size ISO 4401:
1 = 10 **2** = 16 **4** = 25 **4M** = 27 **6** = 32 **8** = 35

Configuration:

Standard Option **/B**

60 =

70 =

Spool type, regulating characteristics, see section 15 :

L =linear **T** =non linear **(1)** **DL** = differential-linear
P-A = Q, B-T = Q/2
P-B = Q/2, A-T = Q

Series number

Seals material, see section 14 :
- = NBR
PE = FKM
BT = NBR low temperature

Safety options TÜV certified **(2)**:
U = safe double power supply
K = safe on/off signals
See section 10

SAFETY CERTIFIED

Hydraulic options (2):
B = solenoid with on-board digital driver + axis card and LVDT transducer at side of port B of the main stage (side A of pilot valve)
D = internal drain
E = external pilot pressure
G = pressure reducing valve for piloting (standard for DPZO-1)

Electronic options (2):
C = current feedback for analog position and pressure transducers 4÷20mA
I = current reference input and monitor 4÷20mA

Spool size	**3** (L)	**5** (L,DL)	**5** (L)	**5** (T)
DPZO-1 =	-	100	-	-
DPZO-2 =	160	250	-	190
DPZO-4 =	-	480	-	-
DPZO-4M =	-	550	-	-
DPZO-6 =	-	-	640	-
DPZO-8 =	-	-	1200	-

Nominal flow (l/min) at Δp 10bar P-T (see section 12)

(1) Not available for configuration **60** **(2)** For possible combined options consult Atos technical office

2 POSITION CONTROL

2.1 External reference signal

Axis card controls in closed loop the actuator position according to a position reference signal from the machine central unit.

Position profile can be managed in two ways (software selectable):

- Without trajectory generation **(a)**: the axis card receives from the machine central unit the position reference signal and follows it at any given instant
- With trajectory generation **(b)**: the axis card receives from the machine central unit just the final target position and internally generates a position profile limiting acceleration, velocity and deceleration

The position reference signal can be software selected between Analog reference **(c)** and Fieldbus reference **(d)**.

Refer to the axis card user manual for further details on position control features.

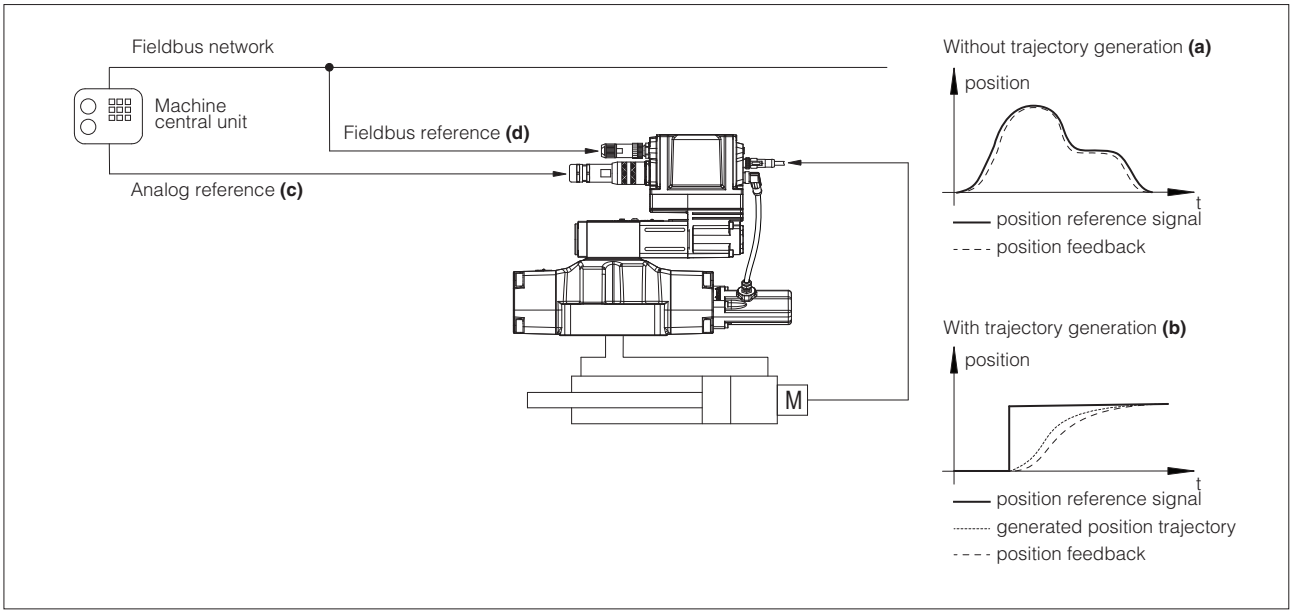

2.2 Automatic cycle

Axis card controls in closed loop the actuator position according to an internally generated automatic cycle: only start, stop and switch-over commands are required from the machine electronic central unit by means On-off commands **(e)** or Fieldbus commands **(f)**.

Atos PC software allows to realize an automatic cycle according to the application requirements. Refer to the axis card user manual for further details on automatic cycle features.

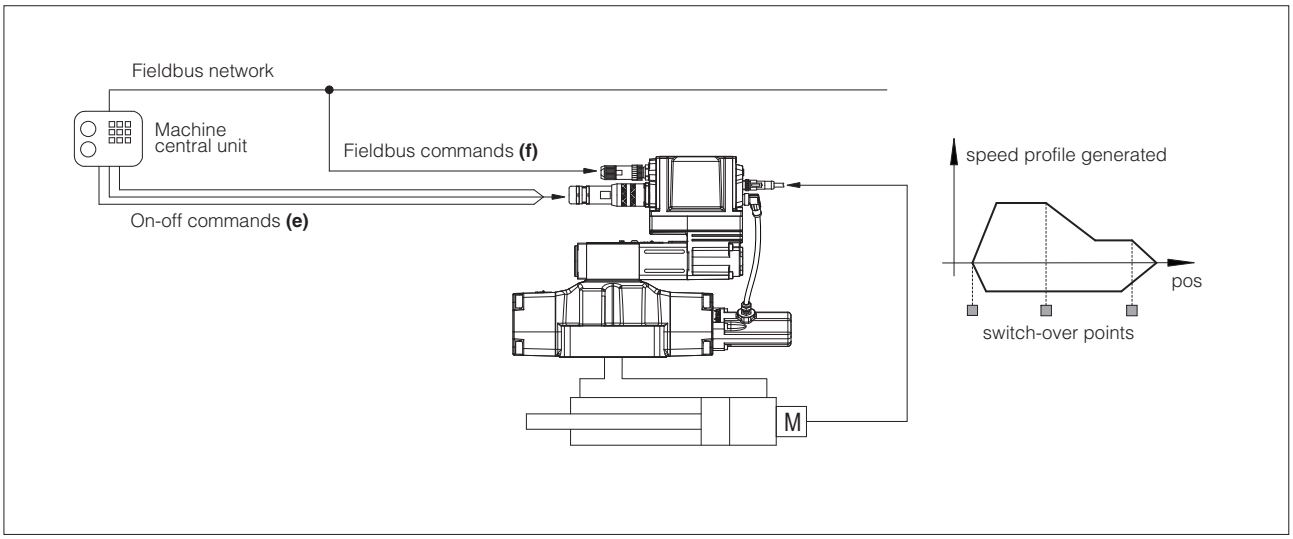

3 ALTERNATED POSITION / FORCE CONTROL

SF and **SL** controls add the alternated force closed loop control to the actuator standard position control. Pressure or force remote transducers have to be installed on the actuator and interfaced to the valve, see below functional schemes.

The position/force controls are operated according to two separate reference signals and a dedicated algorithm automatically selects which control is active time by time.

The dynamics of the switching between the two controls can be regulated thanks to specific software setting, in order to avoid instability and vibrations.

Position control is active (see phase ① and ③ at side) when the actuator force is lower than the relevant reference signal - the valve controls the actuator position by closed-loop regulation.

Force control is active (see phase ② and ④ at side) when the actuator actual force, measured by remote transducers, grows up to the relevant reference signal - the axis card reduces the valve's regulation in order to limit the actuator force; if the force tends to decrease under its reference signal, the position control returns active.

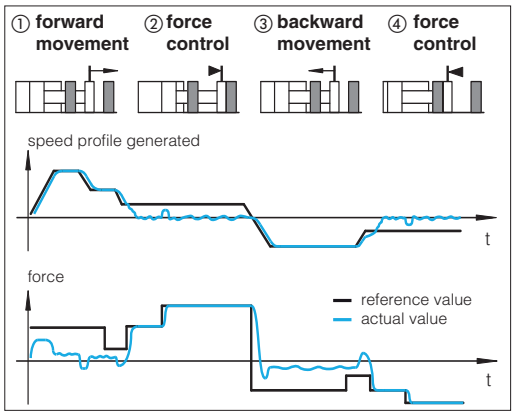

Alternated control configurations

SF	SL
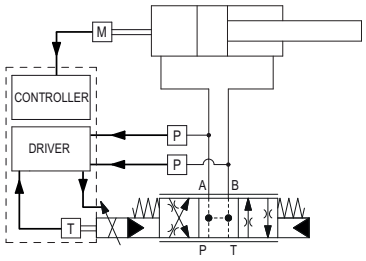	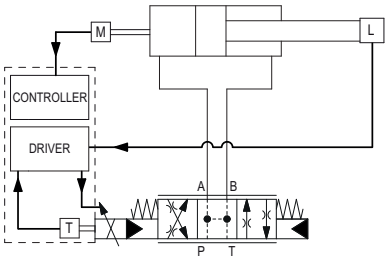
two remote pressure transducers have to be installed on the actuator's ports; the actuator force is calculated by the pressure feedbacks (Pa - Pb)	one load cell transducer has to be installed between the actuator and the controlled load

T valve spool transducer	M actuator position transducer	P pressure transducer	L load cell

SF – position/force control

Adds force control to standard position control and permits to limit the max force in two directions controlling in closed loop the delta pressure acting on both sides of the hydraulic actuator. Two pressure transducers have to be installed on A and B hydraulic lines.

SL – position/force control

Adds force control to standard position control and permits to limit the max force in one or two directions controlling in closed loop the force performed by the hydraulic actuator. A load cell has to be installed on the hydraulic actuator.

General Notes:

- auxiliary check valves are recommended in case of specific hydraulic configuration requirements in absence of power supply or fault
- Atos technical office is available for additional evaluations related to specific applications

4 GENERAL NOTES

Atos digital proportionals valves are CE marked according to the applicable directives (e.g. Immunity and Emission EMC Directive).
Installation, wirings and start-up procedures must be performed according to the general prescriptions shown in tech table **FS900** and in the user manuals included in the Z-SW-SETUP programming software.

5 VALVE SETTINGS AND PROGRAMMING TOOLS - see tech. table GS500

Free downloadable software for PC allows to set all valve functional parameters and to access complete diagnostic information of digital axis controls via Bluetooth/USB service port.
Atos Z-SW-SETUP PC software supports all Atos digital axis controls and it is available at www.atos.com in MyAtos area

⚠ **WARNING: axis card USB port is not isolated!** For E-C-SB-USB/M12 cable, the use of E-A-SB-USB/OPT isolator adapter is highly recommended for PC protection

⚠ **WARNING:** for the list of countries where the Bluetooth adapter has been approved, see tech. table **GS500**

Bluetooth or USB connection

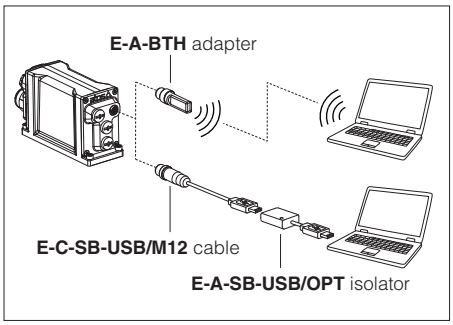

6 SMART START-UP

The automatic procedure supports the user during the commissioning phases of the axis control with guided procedures:

- **General setting**
It assists the user in system data setup, as like cylinder stroke, diameters, load mass, configure analog/digital signals and communication interface, position transducer setup.
- **System check**
It automatically executes position open loop movements to set axis control parameters, position transducer calibration and verify cylinder stroke.
- **Position autotuning**
It automatically determines the optimal PID parametrization of the position control adapting the dynamic response to guarantee control precision and axis stability. Once the procedure is started, the control performs few automatic position open loop movements of the actuator, during which control parameters are calculated and stored.

7 SMART TUNING

Once the Smart Start-up procedure has been completed, the Smart tuning feature allows to further refine the position control response by choosing from 3 different levels of performance in positioning:

- **dynamic** best dynamics and accuracy (default factory setting)
- **balanced** average dynamics and accuracy
- **smooth** attenuated dynamics and accuracy to improve control stability in critical applications or in environments with electrical disturbances

Settings can be changed any time via Z-SW-SETUP software or fieldbus.

If required, control performance can be further customized by modifying PID parameter via Z-SW-SETUP software.

1 = position reference signal
2 = generated position trajectory
3 = dynamic
4 = balanced
5 = smooth

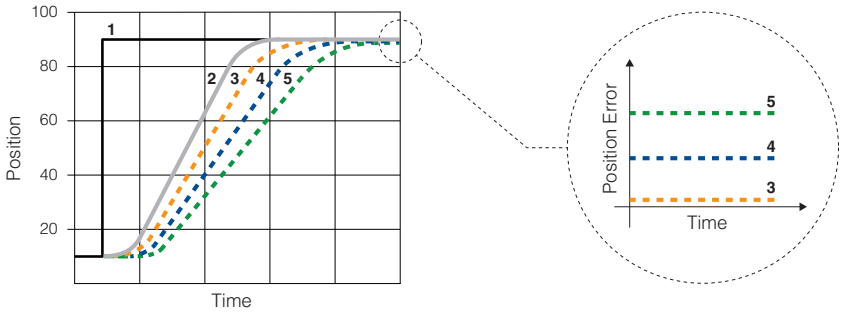

8 MULTIPLE SETS

Multiple PID sets allows to easily switch axis behaviour according to machine cycle, selecting between independent groups of parameters for:

- **position control PID**
- **force control PID and p/Q logics switching criteria**

Settings can be changed any time via Z-SW-SETUP software, fieldbus or digital input signals.

9 FIELDBUS - see tech. table GS510

Fieldbus allows valve direct communication with machine control unit for digital reference, valve diagnostics and settings. These execution allow to operate the valves through fieldbus or analog signals available on the main connector.

10 SAFETY OPTIONS

Atos range of proportional directional valves, provides functional safety options **/U** and **/K** , designed to accomplish a safety function, intended to reduce the risk in process control systems.

They are **TÜV certified** in compliance to **IEC 61508 up to SIL 3 and ISO 13849 up to category 4, PL e**

Safe double power supply, option **/U**: the axis card has separate power supplies for logic and solenoids. The safe condition is reached by cutting the electrical supply to solenoids, while electronics remains active for monitoring functions and fieldbus communication, see tech table **FY100**

Safety function via on/off signals, option **/K**: upon a disable command, the axis card checks the spool position and it provides on-off acknowledgement signal only when the valve is in safe condition, see tech table **FY200**

11 GENERAL CHARACTERISTICS

Assembly position	Any position
Subplate surface finishing to ISO 4401	Acceptable roughness index: Ra ≤0,8, recommended Ra 0,4 – Flatness ratio 0,01/100
MTTFd valves according to EN ISO 13849	75 years, for futher details see technical table P007
Ambient temperature range	**Standard** = -20°C ÷ +60°C **/PE** option = -20°C ÷ +60°C **/BT** option = -40°C ÷ +60°C
Storage temperature range	**Standard** = -20°C ÷ +70°C **/PE** option = -20°C ÷ +70°C **/BT** option = -40°C ÷ +70°C
Surface protection	Zinc coating with black passivation, galvanic treatment (driver housing)
Corrosion resistance	Salt spray test (EN ISO 9227) > 200 h
Vibration resistance	See technical table G004
Compliance	CE according to EMC directive 2014/30/EU (Immunity: EN 61000-6-2; Emission: EN 61000-6-3) RoHS Directive 2011/65/EU as last update by 2015/863/EU REACH Regulation (EC) n°1907/2006

12 HYDRAULIC CHARACTERISTICS - based on mineral oil ISO VG 46 at 50 °C

Valve model	**DPZO-*-1**	**DPZO-*-2**			**DPZO-*-4**	**DPZO-*-4M**	**DPZO-*-6**	**DPZO-*-8**
Pressure limits [bar]	ports **P, A, B, X** = 350; **T** = 250 (10 for option /D); **Y** = 10;							
Spool type and size	**L5, DL5**	**L3**	**L5, DL5**	**T5**	**L5, DL5**		**L5**	
Nominal flow Δp P-T [l/min] **(1)** Δp= 10 bar	100	160	250	190	480	550	640	1200
Δp= 30 bar	160	270	430	330	830	950	1100	2000
Max permissible flow [l/min]	180	400	550	550	1000	1100	1600	3500
Piloting pressure [bar]	min. = 25; max = 350 (option /G advisable for pilot pressure > 200 bar)							
Piloting volume [cm³/min]	1,4	3,7			9	11,3	21,6	39,8
Piloting flow **(2)** [l/min]	3,5	9			18	20	19	24
Leakage **(3)** Pilot [cm³/min]	100 / 300	150 / 450			200 / 600	200 / 600	900 / 2800	900 / 2800
Main stage [l/min]	0,4 / 1,2	0,6 / 2,5			1,0 / 4,0	1,0 / 4,0	3,0 / 9,0	6,0 / 20
Response time **(4)** [ms]	≤ 25	≤ 25			≤ 30	≤ 35	≤ 80	≤ 100
Hysteresis	≤ 0,1 [%of max regulation]							
Repeatability	± 0,1 [%of max regulation]							
Thermal drift	zero point displacement < 1% at ΔT = 40°C							

(1) For different Δp, the max flow is in accordance to the diagrams in section 15.2
(2) With step reference input signal 0 ÷100 %
(3) At p = 100/350 bar
(4) 0-100% step signal, see detailed diagrams in section 15.3

13 ELECTRICAL CHARACTERISTICS

Power supplies	Nominal : +24 VDC Rectified and filtered : VRMS = 20 ÷ 32 VMAX (ripple max 10 % VPP)			
Max power consumption	50 W			
Max. solenoid current	2,6 A			
Coil resistance R at 20°C	3 ÷ 3,3 Ω			
Analog input signals	Voltage: range ±10 VDC (24 VMAX tolerant) Input impedance: Ri > 50 kΩ Current: range ±20 mA Input impedance: Ri = 500 Ω			
Monitor outputs	Output range: voltage ±10 VDC @ max 5 mA current ±20 mA @ max 500 Ω load resistance			
Enable input	Range: 0 ÷ 5 VDC (OFF state), 9 ÷ 24 VDC (ON state), 5 ÷ 9 VDC (not accepted); Input impedance: Ri > 10 kΩ			
Fault output	Output range: 0 ÷ 24 VDC (ON state > [power supply - 2 V] ; OFF state < 1 V) @ max 50 mA; external negative voltage not allowed (e.g. due to inductive loads)			
Position transducers power supply	+24 VDC @ max 100 mA and +5 VDC @ max 100 mA are software selectable; ±10 VDC @ max 14 mA minimum load resistance 700 Ω			
Pressure/Force transducer power supply (only for SF, SL)	+24VDC @ max 100 mA (E-ATR-8 see tech table **GS465**)			
Alarms	Solenoid not connected/short circuit, cable break with current reference signal, over/under temperature, valve spool transducer malfunctions, alarms history storage function			
Insulation class	H (180°) Due to the occurring surface temperatures of the solenoid coils, the European standards ISO 13732-1 and EN982 must be taken into account			
Protection degree to DIN EN60529	IP66 / IP67 with mating connectors			
Duty factor	Continuous rating (ED=100%)			
Tropicalization	Tropical coating on electronics PCB			
Additional characteristics	Short circuit protection of solenoid's current supply; 3 leds for diagnostic; spool position control, force control (SF, SL) by axis P.I.D. with rapid solenoid switching; protection against reverse polarity of power supply			
Communication interface	USB Atos ASCII coding	CANopen EN50325-4 + DS408	PROFIBUS DP EN50170-2/IEC61158	EtherCAT, POWERLINK, EtherNet/IP, PROFINET IO RT / IRT EC 61158
Communication physical layer	not insulated USB 2.0 + USB OTG	optical insulated CAN ISO11898	optical insulated RS485	Fast Ethernet, insulated 100 Base TX
Recommended wiring cable	LiYCY shielded cables, see section 22			

Note: a maximum time of 800 ms (depending on communication type) has to be considered between the axis card energizing with the 24 VDC power supply and when the valve is ready to operate. During this time the current to the valve coils is switched to zero.

14 SEALS AND HYDRAULIC FLUIDS - for other fluids not included in below table, consult our technical office

Seals, recommended fluid temperature	NBR seals (standard) = -20°C ÷ +60°C, with HFC hydraulic fluids = -20°C ÷ +50°C FKM seals (/PE option) = -20°C ÷ +80°C NBR low temp. seals (/BT option) = -40°C ÷ +60°C, with HFC hydraulic fluids = -20°C ÷ +50°C			
Recommended viscosity	20÷100 mm²/s - max allowed range 15 ÷ 380 mm²/s			
Max fluid contamination level — normal operation	ISO4406 class 18/16/13 NAS1638 class 7		see also filter section at www.atos.com or KTF catalog	
Max fluid contamination level — longer life	ISO4406 class 16/14/11 NAS1638 class 5			
Hydraulic fluid	**Suitable seals type**	**Classification**	**Ref. Standard**	
Mineral oils	NBR, FKM, NBR low temp.	HL, HLP, HLPD, HVLP, HVLPD	DIN 51524	
Flame resistant without water	FKM	HFDU, HFDR	ISO 12922	
Flame resistant with water	NBR, NBR low temp.	HFC		

15 DIAGRAMS (based on mineral oil ISO VG 46 at 50 °C)

15.1 Regulation diagrams (values measure at Δp 10 bar P-T)

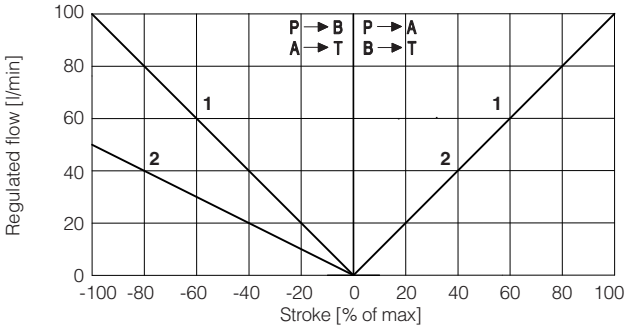

DPZO-1: **1** = L5 **2** = DL5

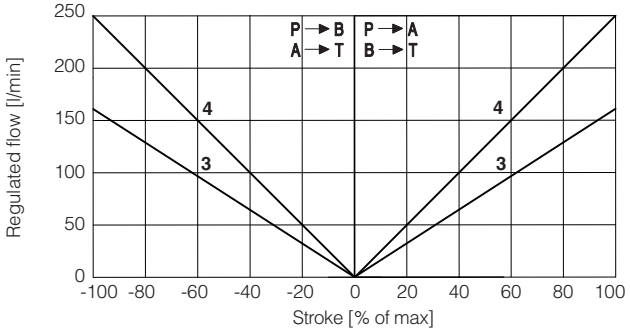

DPZO-2: **3** = L3 **4** = L5

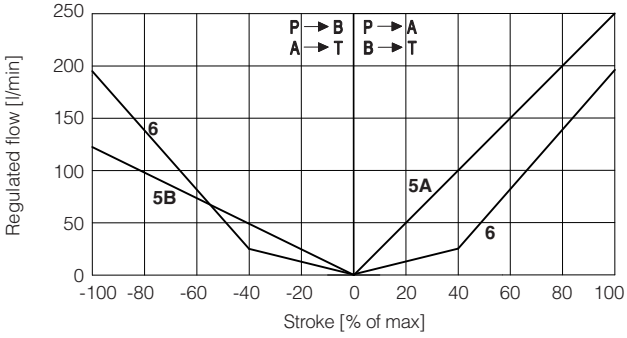

DPZO-2: **5A** = DL5 (P → A, A → T) **6** = T5
5B = DL5 (P → B, B → T)

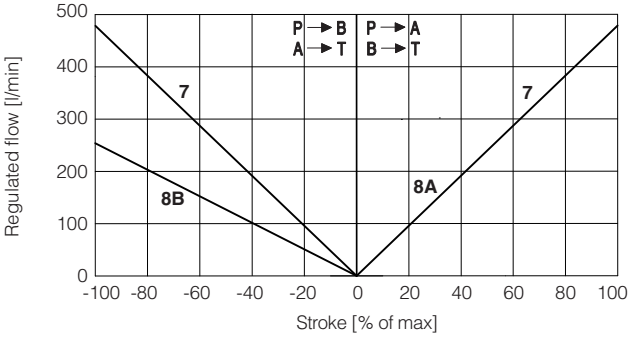

DPZO-4: **7** = L5 **8A** = DL5 (P → A, A → T)
8B = DL5 (P → B, B → T)

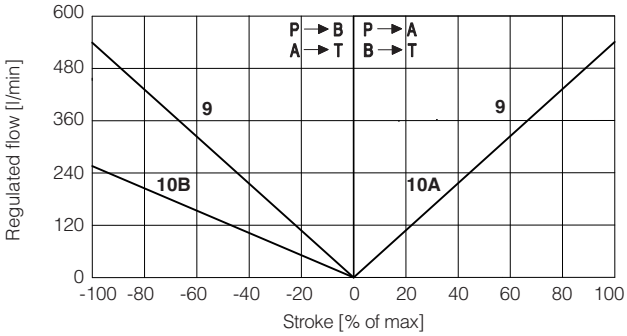

DPZO-4M: **9** = L5 **10A** = DL5 (P → A, A → T)
10B = DL5 (P → B, B → T)

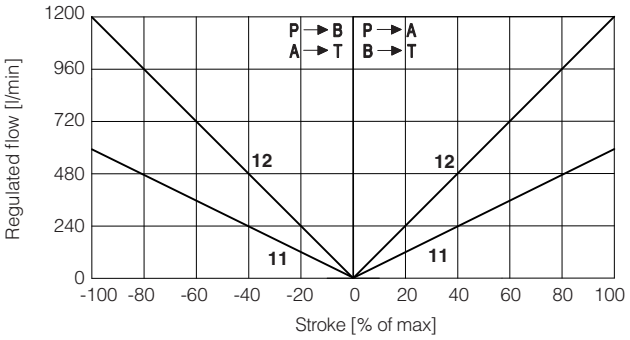

DPZO-6: **11** = L5
DPZO-8: **12** = L5

15.2 Flow /Δp diagram - stated at 100% of spool stroke

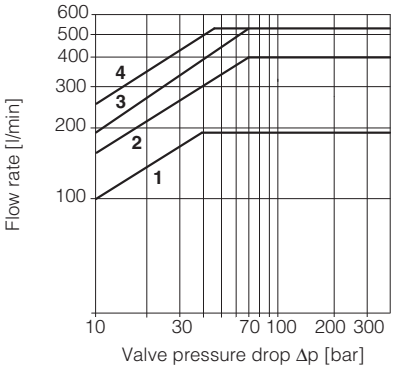

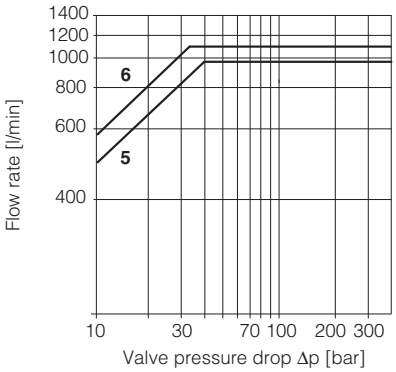

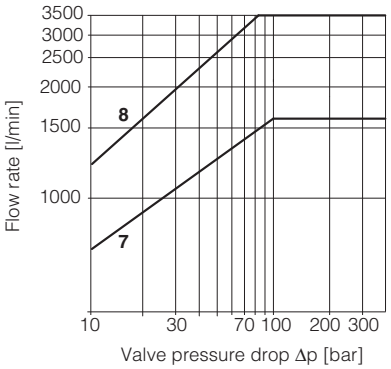

DPZO-1:
1 = spools L5, DL5

DPZO-2:
2 = spools L3
3 = spool T5
4 = spools L5, DL5

DPZO-4:
5 = spools L5, DL5

DPZO-4M:
6 = spools L5, DL5

DPZO-6:
7 = L5

DPZO-8:
8 = L5

Note: Hydraulic configuration vs. reference signal for configurations 60 and 70 (standard and option /B)

Reference signal $\left.\begin{matrix}0 \div +10\ V \\ 12 \div 20\ mA\end{matrix}\right\}$ P → A / B → T

Reference signal $\left.\begin{matrix}0 \div -10\ V \\ 4 \div 12\ mA\end{matrix}\right\}$ P → B / A → T

15.3 Valve response time

The valve response times in below diagrams are measured at different steps of the reference input signal. They have to be considered as average values.

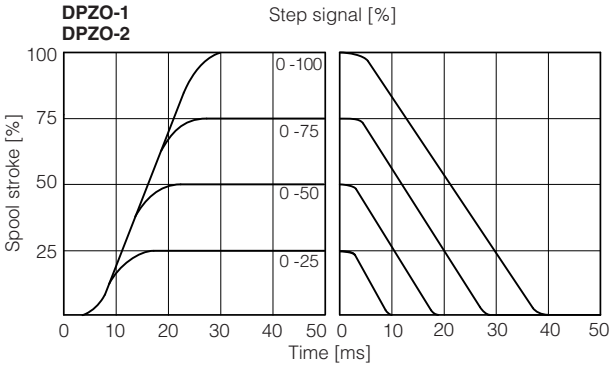

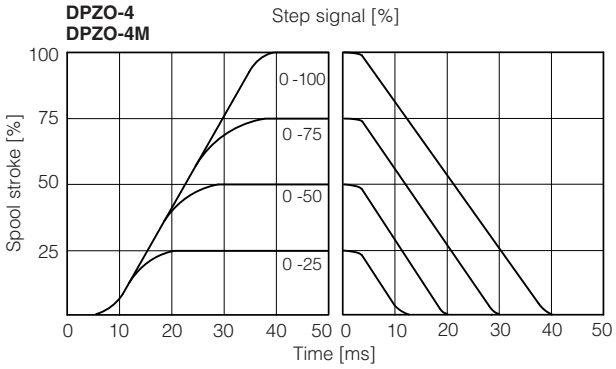

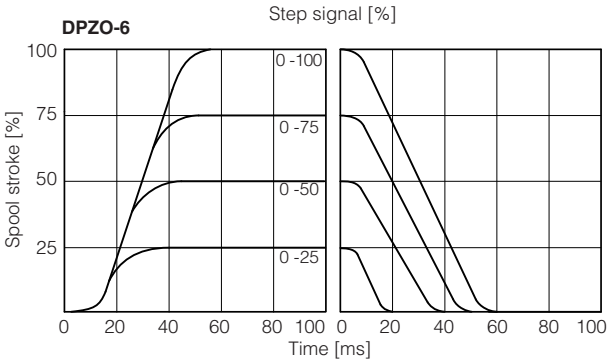

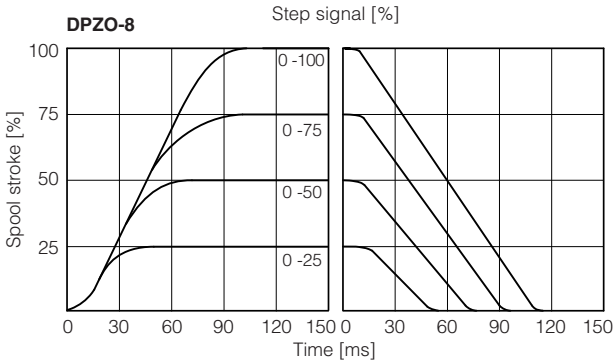

15.4 Bode diagrams DPZO-1, DPZO-2
Stated at nominal hydraulic conditions

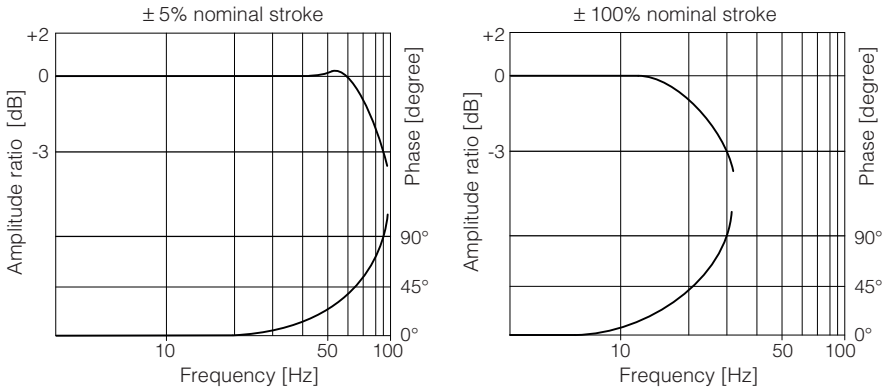

15.5 Bode diagrams DPZO-4, DPZO-4M
Stated at nominal hydraulic conditions

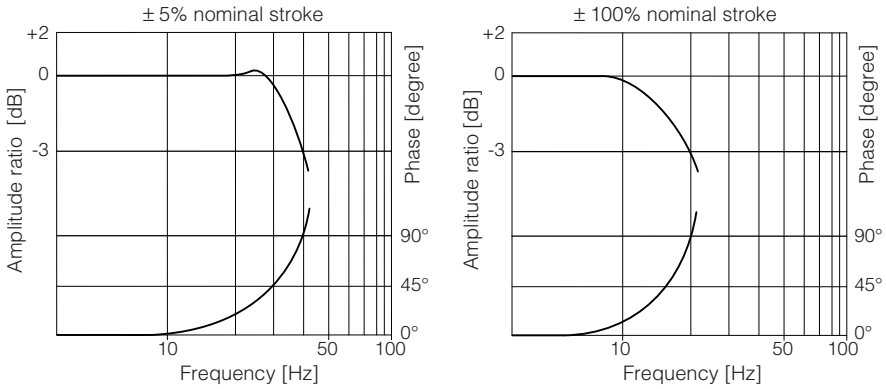

15.6 Bode diagrams DPZO-6
Stated at nominal hydraulic conditions

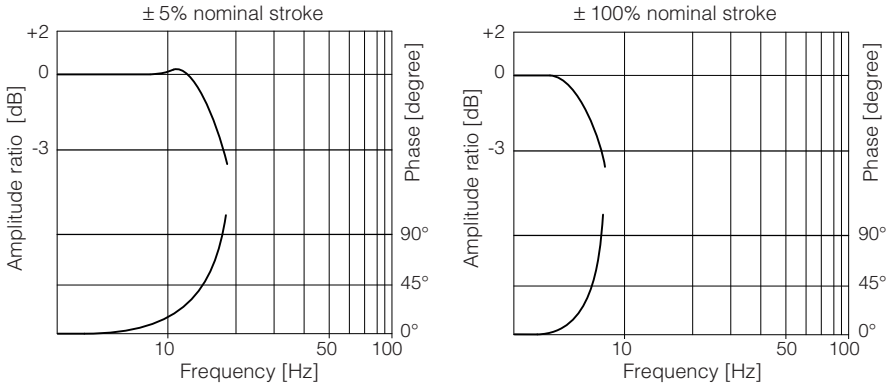

15.7 Bode diagrams DPZO-8
Stated at nominal hydraulic conditions

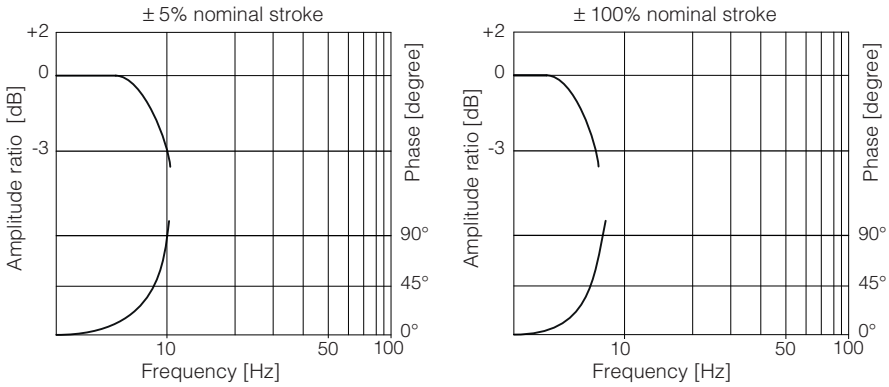

15.8 Pressure gain

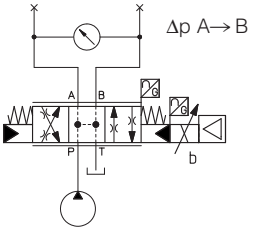

9 = DPZO-1

10 = DPZO-2
DPZO-4
DPZO-4M
DPZO-6
DPZO-8

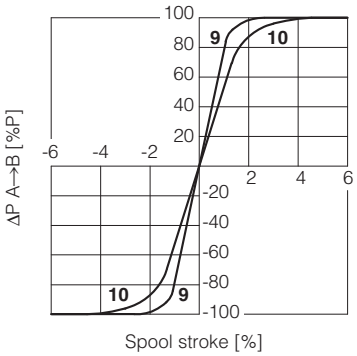

16 HYDRAULIC OPTIONS

B = Solenoid, on-board digital driver + axis card and LVDT position transducer at side of port B of the main stage (side A of pilot valve). For hydraulic configuration vs reference signal, see 15.1

D = Internal drain (through port T).
Pilot and drain configuration can be modified as shown in the functional scheme here aside. For detailed view of plugs position, see section 25
The valve's standard configuration provides internal pilot and external drain.

E = External pilot (through port X).
Pilot and drain configuration can be modified as shown in the functional scheme here aside. For detailed view of plugs position, see section 25
The valve's standard configuration provides internal pilot and external drain.

G = Pressure reducing valve ③ with fixed setting, installed between pilot valve and main body. Reduced pressure setting:

DPZO-2 = **28 bar**

DPZO-1, DPZO-2, DPZO-4(M), DPZO-6 and DPZO-8 = **40 bar**

It is advisable for valves with internal pilot in case of system pressure higher than 200 bar.
Pressure reducing valve ③ is standard for DPZO-1, for other sizes add /G option.

Functional Scheme - example of configuration 70

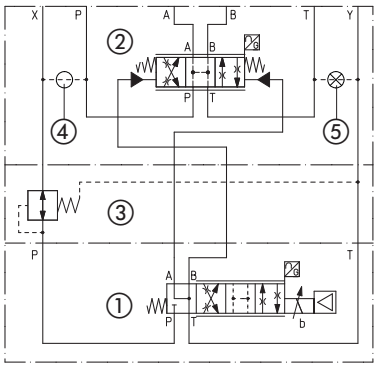

① Pilot valve
② Main stage
③ Pressure reducing valve
④ Plug to be added for external pilot trough port X
⑤ Plug to be removed for internal drain through port T

17 ELECTRONIC OPTIONS

I = This option provides 4 ÷ 20 mA current reference and monitor signals, instead of the standard ±10 VDC.
Input signal can be reconfigured via software selecting between voltage and current, within a maximum range of ±10 VDC or ±20 mA.
It is normally used in case of long distance between the machine control unit and the valve or where the reference signal can be affected by electrical noise; the valve functioning is disabled in case of reference signal cable breakage.

C = This option is available to connect analog position transducer and pressure/force transducers with 4 ÷ 20 mA current output signal, instead of the standard ±10 VDC.
Input signal can be reconfigured via software selecting between voltage and current, within a maximum range of ±10 VDC or ±20 mA.

18 POWER SUPPLY AND SIGNALS SPECIFICATIONS

Generic electrical output signals of the valve (e.g. fault or monitor signals) must not be directly used to activate safety functions, like to switch-ON/OFF the machine's safety components, as prescribed by the European standards (Safety requirements of fluid technology systems and components-hydraulics, ISO 4413).
For certified safety options: **/U** see tech. table **FY100** and **/K** see tech. table **FY200**

18.1 Power supply (V+ and V0)

The power supply must be appropriately stabilized or rectified and filtered: apply at least a 10000 µF/40 V capacitance to single phase rectifiers or a 4700 µF/40 V capacitance to three phase rectifiers. In case of separate power supply see 18.2.

⚠ A safety fuse is required in series to each power supply: 2,5 A time lag fuse.

18.2 Power supply for axis card logic and communication (VL+ and VL0)

The power supply for axis card logic and communication must be appropriately stabilized or rectified and filtered: apply at least a 10000 µF/40 V capacitance to single phase rectifiers or a 4700 µF/40 V capacitance to three phase rectifiers.
The separate power supply for axis card logic on pin 9 and 10, allow to remove solenoid power supply from pin 1 and 2 maintaining active the diagnostics, USB and fieldbus communications.

⚠ A safety fuse is required in series to each axis card logic and communication power supply: 500 mA fast fuse.

18.3 Position reference input signal (P_INPUT+)

Functionality of P_INPUT+ signal (pin 4), depends on axis card reference mode, see section 2 :

external analog reference (see 2.1): input is used as reference for control in closed loop the actuator position.
Reference input signal is factory preset according to selected valve code, defaults are ±10 VDC for standard and 4 ÷ 20 mA for /I option.
Input signal can be reconfigured via software selecting between voltage and current, within a maximum range of ±10 VDC or ± 20 mA.

external fieldbus reference (see 2.1) *or automatic cycle* (see 2.2)*:* analog reference input signal can be used as on-off commands with input range 0 ÷ 24 VDC.

18.4 Force reference input signal (F_INPUT+) - only for SF, SL

Functionality of F_INPUT+ signal (pin 7), depends on selected axis card reference mode and alternated control options, see section 3 :

SL, SF controls and external analog reference selected : input is used as reference for the axis card force closed loop.
Reference input signal is factory preset according to selected valve code, defaults are ±10 VDC for standard and 4 ÷ 20 mA for /I option.
Input signal can be reconfigured via software selecting between voltage and current, within a maximum range of ±10 VDC or ± 20 mA.

SN control or fieldbus reference selected: analog reference input signal can be used as on-off commands with input range 0 ÷ 24VDC.

18.5 Position monitor output signal (P_MONITOR)

The axis card generates an analog output signal proportional to the actual axis position; the monitor output signal can be software set to show other signals available in the axis card (e.g. analog reference, fieldbus reference, position error, valve spool position).
Monitor output signal is factory preset according to selected valve code, defaults are ±10 VDC for standard and 4 ÷ 20 mA for /I option.
Output signal can be reconfigured via software selecting between voltage and current, within a maximum range of ±10 VDC or ± 20 mA.

18.6 Force monitor output signal (F_MONITOR) - only for SF, SL

The axis card generates an analog output signal according to alternated force control option:
SN control: output signal is proportional to the actual valve spool position
SL, SF controls: output signal is proportional to the actual forcel applied to the cylinder's rod end
Monitor output signals can be software set to show other signals available in the axis card (e.g. analog reference, force reference).
The output range and polarity are software selectable within the maximum range ±10 VDC or ±20 mA.
Monitor output signal is factory preset according to selected valve code, defaults are ±10 VDC for standard and 4 ÷ 20 mA for /I option.
Output signal can be reconfigured via software selecting between voltage and current, within a maximum range of ±10 VDC or ± 20 mA.

18.7 Enable input signal (ENABLE)

To enable the axis card, a 24VDC voltage has to be applied on pin 3.
When the Enable signal is set to zero the axis card can be software set to perform one of the following actions:
- maintain the actuator actual position in close loop control
- move towards a predefined position in closed loop control and maintains the reached position (hold position)
- move forward or backward in open loop (only the valve's closed loop remain active)

18.8 Fault output signal (FAULT)

Fault output signal indicates fault conditions of the axis card (solenoid short circuits/not connected, reference or transducer signal cable broken, maximum error exceeded, etc.). Fault presence corresponds to 0 VDC, normal working corresponds to 24 VDC.
Fault status is not affected by the Enable input signal.
Fault output signal can be used as digital output by software selection.

18.9 Position transducer input signal

A position transducer must be always directly connected to the axis card. Select the correct axis card execution depending on the desired transducer interface: digital SSI or Encoder (D execution), potentiometer or a generic transducer with analog interface (A execution).
Position digital input signal is factory preset to binary SSI, it can be reconfigured via software selecting between binary/gray SSI and Encoder.
Position analog input signal is factory preset according to selected valve code, defaults are ±10 VDC for standard and 4 ÷ 20 mA for /C option.
Input signal can be reconfigured via software selecting between voltage and current, within a maximum range of ±10 VDC or ± 20 mA.
Refer to position transducer characteristics to select the transducer type according to specific application requirements (see 19.1).

18.10 Remote pressure/force transducer input signals - only for SF, SL

Analog remote pressure transducers or load cell can be directly connected to the axis card.
Analog input signal is factory preset according to selected valve code, defaults are ±10 VDC for standard and 4 ÷ 20 mA for /C option.
Input signal can be reconfigured via software selecting between voltage and current, within a maximum range of ±10 VDC or ± 20 mA.
Refer to pressure/force transducer characteristics to select the transducer type according to specific application requirements (see 19.2).

19 ACTUATOR'S TRANSDUCER CHARACTERISTICS

19.1 Position transducers

The accuracy of the position control is strongly dependent to the selected position transducer. Four different transducer interfaces are available on the axis cards, depending to the system requirements: potentiometer or analog signal (A execution), SSI or Encoder (D execution).
Transducers with digital interface allow high resolution and accurate measures, that combined with fieldbus communication grants highest performances.
Transducers with analog interface grant simple and cost effective solutions.

19.2 Pressure/force transducers

The accuracy of the pressure/force control is strongly dependent to the selected pressure/force transducer, see section 3 .
Alternated pressure/force controls require to install pressure transducers or load cell to measure the actual pressure/force values.
Pressure transducers allow easy system integration and cost effective solution for alternated position/force controls (see tech table **GS465** for pressure transducers details). Load cell transducers allow the user to get high accuracy and precise regulations for alternated position/force control.
The characteristics of the remote pressure/force transducers must be always selected to match the application requirements and to obtain the best performances: transducer nominal range should be at least 115%÷120% of the maximum regulated pressure/force.

19.3 Transducers characteristics & interfaces - following values are just for reference, for details please consult the transducer's datasheet

	Position				**Pressure/Force**
Execution	**A**		**D**		**SF, SL**
Input type	Potentiometer	Analog	SSI **(3)**	Incremental Encoder	Analog
Power supply **(1)**	10 ÷ 30 VDC	+24 VDC	+24 VDC	+5 VDC / +24 VDC	+24 VDC
Axis card interface	0 ÷ 10 V	0 ÷ 10V 4 ÷ 20 mA	Serial SSI binary/gray	TTL 5Vpp - 150 KHz	±10 VDC 4 ÷ 20 mA
Max speed	0,5 m/s	1 m/s	1 m/s	2 m/s	-
Max resolution	< 0.4 % FS	< 0.2 % FS	5 µm	1 µm (@ 0.15 m/s)	< 0.4 % FS
Linearity error **(2)**	± 0.1% FS	< ±0.02% FS	< ± 0.02 % FS	< ± 0.001 % FS	< ±0.25% FS
Repeatability **(2)**	± 0.05% FS	< ± 0.005% FS	< ± 0.005 % FS	< ± 0.001 % FS	< ±0.1% FS

(1) Power supply provided by Atos axis card **(2)** Percentage of total stroke **(3)** For Balluff BTL7 with SSI interface only special code SA433 is supported

20 ELECTRONIC CONNECTIONS

For electronic connection of certified safety options **/U** see tech. table **FY100** and **/K** see tech. table **FY200**

20.1 Main connector - 12 pin (A)

PIN	SIGNAL	TECHNICAL SPECIFICATIONS	NOTES
1	**V+**	Power supply 24 VDC	Input - power supply
2	**V0**	Power supply 0 VDC	Gnd - power supply
3	**ENABLE**	Enable (24 VDC) or disable (0 VDC) the axis card, referred to VL0	Input - on/off signal
4	**P_INPUT+**	Position reference input signal: ±10 VDC / ±20 mA maximum range	Input - analog signal **Software selectable**
5	**INPUT-**	Negative reference input signal for P_INPUT+ and F_INPUT+	Gnd - analog signal
6	**P_MONITOR**	Position monitor output signal: ±10 VDC / ±20 mA maximum range, referred to VL0	Output - analog signal **Software selectable**
7	**F_INPUT+**	Force reference input signal (SF, SL controls): ±10 VDC / ±20 mA maximum range	Input - analog signal **Software selectable**
8	**F_MONITOR**	Force (SF, SL controls) or valve spool position (SN control) monitor output signal: ±10 VDC / ±20mA maximum range, referred to VL0	Output - analog signal **Software selectable**
9	**VL+**	Power supply 24 VDC for axis card logic and communication	Input - power supply
10	**VL0** (1)	Power supply 0 VDC for axis card logic and communication	Gnd - power supply
11	**FAULT**	Fault (0 VDC) or normal working (24 VDC), referred to VL0	Output - on/off signal
PE	**EARTH**	Internally connected to axis card housing	

(1) Do not disconnect VL0 before VL+ when the axis card is connected to PC USB port

20.2 Communication connectors (B) - (C)

(B) **USB connector - M12 - 5 pin** always present		
PIN	**SIGNAL**	**TECHNICAL SPECIFICATION** (1)
1	**+5V_USB**	Power supply
2	**ID**	Identification
3	**GND_USB**	Signal zero data line
4	**D-**	Data line -
5	**D+**	Data line +

(C1) (C2) **BC fieldbus execution, connector - M12 - 5 pin**		
PIN	**SIGNAL**	**TECHNICAL SPECIFICATION** (1)
1	**CAN_SHLD**	Shield
2	**not used**	(C1) - (C2) pass-through connection (2)
3	**CAN_GND**	Signal zero data line
4	**CAN_H**	Bus line (high)
5	**CAN_L**	Bus line (low)

(C1) (C2) **BP fieldbus execution, connector - M12 - 5 pin**		
PIN	**SIGNAL**	**TECHNICAL SPECIFICATION** (1)
1	**+5V**	Termination supply signal
2	**LINE-A**	Bus line (high)
3	**DGND**	Data line and termination signal zero
4	**LINE-B**	Bus line (low)
5	**SHIELD**	

(1) Shield connection on connector's housing is recommended

(C1) (C2) **EH, EW, EI, EP fieldbus execution, connector - M12 - 4 pin**		
PIN	**SIGNAL**	**TECHNICAL SPECIFICATION** (1)
1	**TX+**	Transmitter
2	**RX+**	Receiver
3	**TX-**	Transmitter
4	**RX-**	Receiver
Housing	**SHIELD**	

(2) Pin 2 can be fed with external +5V supply of CAN interface

20.3 Remote pressure/force transducer connector - M12 - 5 pin - only for **SF, SL** (D)

PIN	SIGNAL	TECHNICAL SPECIFICATION	NOTES	(D1) SL - Single transducer (1)		(D2) SF - Double transducers (1)	
				Voltage	Current	Voltage	Current
1	**VF +24V**	Power supply +24VDC	Output - power supply	Connect	Connect	Connect	Connect
2	**TR1**	1st signal transducer: ±10 VDC / ±20 mA maximum range	Input - analog signal **Software selectable**	Connect	Connect	Connect	Connect
3	**AGND**	Common gnd for transducer power and signals	Common gnd	Connect	/	Connect	/
4	**TR2**	2nd signal transducer: ±10 VDC / ±20 mA maximum range	Input - analog signal **Software selectable**	/	/	Connect	Connect
5	**NC**	Not connect		/	/	/	/

(1) Single/double transducer configuration is software selectable

Remote pressure transducers connection - example

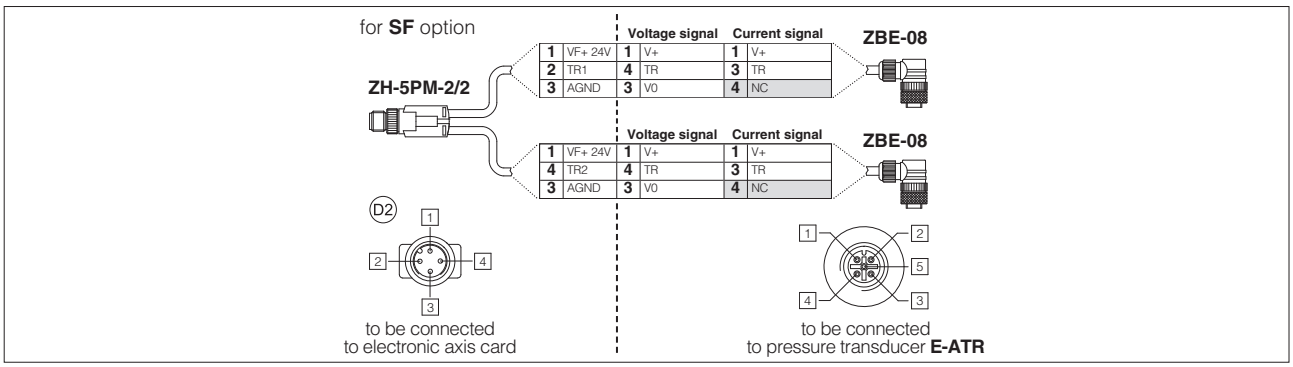

Note: pin layout always referred to axis card view

20.4 D execution - Digital position transducers connector - M12 - 8 pin (E1)

SSI - default transducer (1)				Encoder (1)		
PIN	SIGNAL	TECHNICAL SPECIFICATION	NOTES	SIGNAL	TECHNICAL SPECIFICATION	NOTES
1	**CLOCK+**	Serial syncronous clock (+)	Input - digital signal	**R**	Input channel R	Input - digital signal
2	**CLOCK-**	Serial syncronous clock (-)		**/R**	Input channel /R	
3	**DATA+**	Serial position data (+)		**A**	Input channel A	
4	**DATA-**	Serial position data (-)		**/A**	Input channel /A	
5	**NC**	Not connect	Do not connect	**B**	Input channel B	
6	**NC**			**/B**	Input channel /B	
7	**VP**	Power supply: +24VDC , +5VDC or OFF (default OFF)	Output - power supply **Software selectable**	**VP**	Power supply: +24VDC , +5VDC or OFF (default OFF)	Output - power supply **Software selectable**
8	**0 V**	Common gnd for transducer power and signals	Common gnd	**0 V**	Common gnd for transducer power and signals	Common gnd

(1) Digital position transducer type is software selectable: Encoder or SSI, see 18.9

SSI connection - example

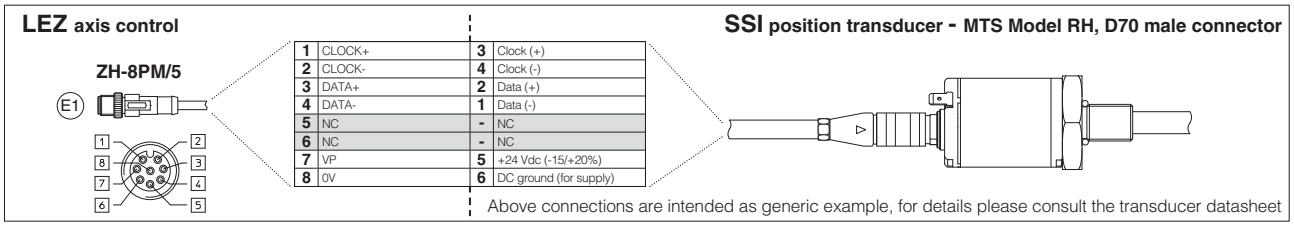

Note: pin layout referred to axis card view

Encoder connection - example

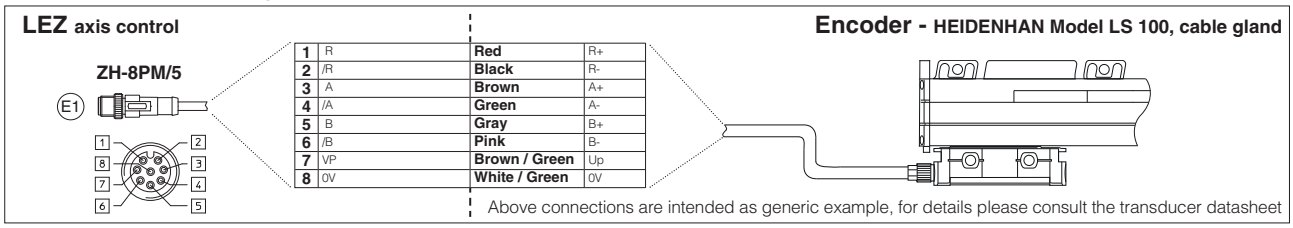

Note: pin layout referred to axis card view

20.5 A execution - Analog position transducers connector - M12 - 5 pin (E2)

PIN	SIGNAL	TECHNICAL SPECIFICATION	NOTES	Potentiometer	Analog
1	**VP +24V**	Power supply: +24VDC or OFF (default OFF)	Output - power supply **Software selectable**	/	Connect
2	**VP +10V**	Power supply reference +10VDC (always present)	Output - power supply	Connect	/
3	**AGND**	Common gnd for transducer power and signals	Common gnd	Connect	Connect
4	**TR**	Signal transducer	Input - analog signal	Connect	Connect
5	**VP -10V**	Power supply reference -10VDC (always present)	Output - power supply	Connect	/

Note: analog input range is software selectable, see 18.9

20.6 LEZ connections layout

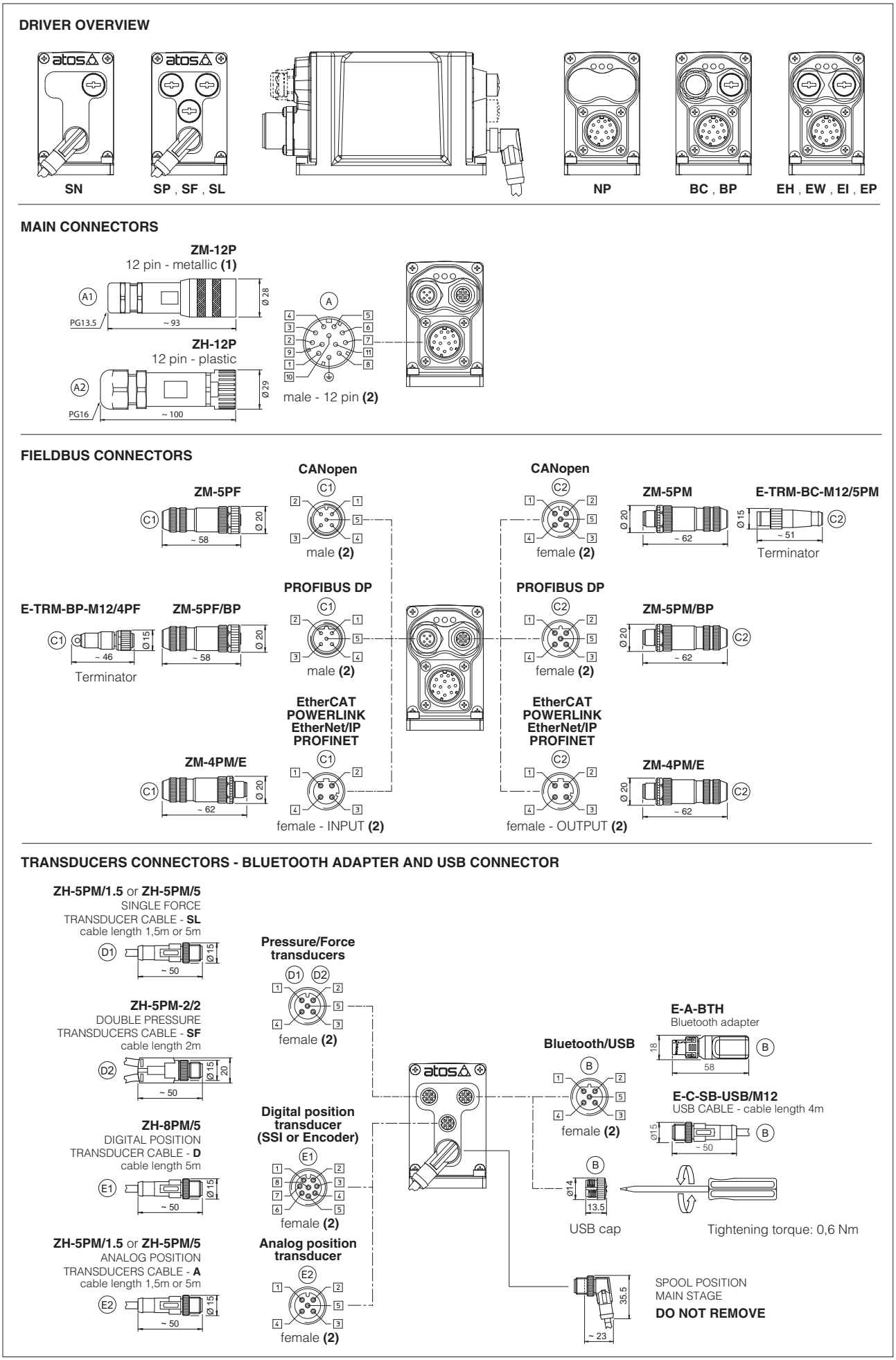

(1) Use of metallic connectors is strongly recommended in order to fulfill EMC requirements **(2)** Pin layout always referred to axis card view

20.7 Diagnostic LEDs (L)

Three leds show axis card operative conditions for immediate basic diagnostics. Please refer to the axis card user manual for detailed information.

FIELDBUS / LEDS	NP Not Present	BC CANopen	BP PROFIBUS DP	EH EtherCAT	EW POWERLINK	EI EtherNet/IP	EP PROFINET
L1	VALVE STATUS			LINK/ACT			
L2	NETWORK STATUS			NETWORK STATUS			
L3	SOLENOID STATUS			LINK/ACT			

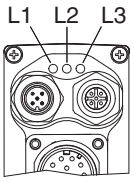

21 IN / OUT FIELDBUS COMMUNICATION CONNECTORS

Two fieldbus communication connectors are always available for digital axis card executions BC, BP, EH, EW, EI, EP. This features allows considerable technical advantages in terms of installation simplicity, wirings reduction and also avoid the usage expensive T-connectors.
For BC and BP executions the fieldbus connectors have an internal pass-through connection and can be used like end point of the fieldbus network, using an external terminator (see tech table **GS500**).
For EH, EW, EI and EP execution the external terminators are not required: each connector is internally terminated.

BC and BP pass-through connection

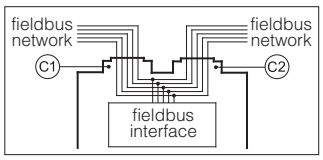

22 CONNECTORS CHARACTERISTICS - to be ordered separately

22.1 Main connectors

CONNECTOR TYPE	POWER SUPPLY	POWER SUPPLY
CODE	(A1) **ZM-12P**	(A2) **ZH-12P**
Type	12pin female straight circular	12pin female straight circular
Standard	DIN 43651	DIN 43651
Material	Metallic	Plastic reinforced with fiber glass
Cable gland	PG13,5	PG16
Recommended cable	LiYCY 12 x 0,75 mm² max 20 m (logic and power supply)	LiYCY 10 x 0,14mm² max 40 m (logic) LiYY 3 x 1mm² max 40 m (power supply)
Conductor size	0,5 mm² to 1,5 mm² - available for 12 wires	0,14 mm² to 0,5 mm² - available for 9 wires 0,5 mm² to 1,5 mm² - available for 3 wires
Connection type	to crimp	to crimp
Protection (EN 60529)	IP 67	IP 67

22.2 Fieldbus communication connectors

CONNECTOR TYPE	BC CANopen (1)		BP PROFIBUS DP (1)		EH EtherCAT, EW POWERLINK, EI EtherNet/IP, EP PROFINET (2)
CODE	(C1) **ZM-5PF**	(C2) **ZM-5PM**	(C1) **ZM-5PF/BP**	(C2) **ZM-5PM/BP**	(C1) (C2) **ZM-4PM/E**
Type	5 pin female straight circular	5 pin male straight circular	5 pin female straight circular	5 pin male straight circular	4 pin male straight circular
Standard	M12 coding A – IEC 61076-2-101		M12 coding B – IEC 61076-2-101		M12 coding D – IEC 61076-2-101
Material	Metallic		Metallic		Metallic
Cable gland	Pressure nut - cable diameter 6÷8 mm		Pressure nut - cable diameter 6÷8 mm		Pressure nut - cable diameter 4÷8 mm
Cable	CANbus Standard (DR 303-1)		PROFIBUS DP Standard		Ethernet standard CAT-5
Connection type	screw terminal		screw terminal		terminal block
Protection (EN 60529)	IP67		IP 67		IP 67

(1) E-TRM-** terminators can be ordered separately, see tech table **GS500**

(2) Internally terminated

22.3 Pressure/Force transducer connectors - only for **SF, SL**

CONNECTOR TYPE	SL - Single transducer		SF - Double transducers
CODE	(D1) **ZH-5PM/1.5**	(D1) **ZH-5PM/5**	(D2) **ZH-5PM-2/2**
Type	5 pin male straight circular		4 pin male straight circular
Standard	M12 coding A – IEC 61076-2-101		M12 coding A – IEC 61076-2-101
Material	Plastic		Plastic
Cable gland	Connector moulded on cables 1,5 m lenght	5 m lenght	Connector moulded on cables 2 m lenght
Cable	5 x 0,25 mm²		3 x 0,25 mm² (both cables)
Connection type	molded cable		splitting cable
Protection (EN 60529)	IP 67		IP 67

22.4 Position transducer connectors

CONNECTOR TYPE	DIGITAL POSITION TRANSDUCER D execution - see 20.4	ANALOG POSITION TRANSDUCER A execution - see 20.5	
CODE	(E1) **ZH-8PM/5**	(E2) **ZH-5PM/1.5**	(E2) **ZH-5PM/5**
Type	8 pin male straight circular	5 pin male straight circular	
Standard	M12 coding A – IEC 61076-2-101	M12 coding A – IEC 61076-2-101	
Material	Plastic	Plastic	
Cable gland	Connector moulded on cables 5 m lenght	Connector moulded on cables 1,5 m lenght	5 m lenght
Cable	8 x 0,25 mm²	5 x 0,25 mm²	
Connection type	molded cable	molded cable	
Protection (EN 60529)	IP 67	IP 67	

23 MAIN SOFTWARE PARAMETER SETTINGS

For a detailed descriptions of the available settings, wirings and installation procedures, please refer to the user manuals included in the Z-SW-SETUP programming software:
Z-MAN-RI-LEZ - user manual for **TEZ** and **LEZ** with **SN**
Z-MAN-RI-LEZ-S - user manual for **TEZ** and **LEZ** with **SF**, **SL**

23.1 External reference and transducer parameters

Allow to configure the axis card reference and transducer inputs, analog or digital, to match the specific application requirements:

- *Scaling parameters* define the correspondence of these signals with the specific actuator stroke or force to be controlled
- *Limit parameters* define maximum/minimum stroke and force to detect possible alarm conditions
- *Homing parameters* define the startup procedure to initialize incremental transducer (e.g. Encoder)

23.2 PID control dynamics parameters

Allow to optimize and adapt the axis card closed loop to the wide range of hydraulic system characteristics:

- *PID parameters* each part of the closed loop algorithm (proportional, integral, derivative, feed forward, fine positioning, etc) can be modified to match the application requirements

23.3 Monitoring parameters

Allow to configure the axis card monitoring function of the positioning error (difference between actual reference and feedback) and detects anomalous conditions:

- *Monitoring parameters* maximum allowed errors can be set for both static and dynamic positioning phases, and dedicated waiting times can be set to delay the activation of the alarm condition and relevant reaction (see 23.4)

23.4 Fault parameters

Allow to configure how the axis card detect and react to alarm conditions:

- *Diagnostics parameters* define different conditions, threshold and delay time to detect alarm conditions
- *Reaction parameters* define different actions to be performed in case of alarm presence (stop at actual or preprogrammed position, emergency forward/backward, axis card disabling, etc.)

23.5 Valve characteristics compensation

Allow to modify the valve regulation to match the actuator/system characteristics and to obtain the best overall performances:

- *Valve parameters* modify the standard valve regulation by means of deadband compensation, curve linearization and differentiated gain for positive and negative regulation

23.6 Motion phases parameters

When the internal reference generation is active a pre-programmed cycle can be generated; start/stop/switch-over commands and reference generation types parameters can be set to design a customized sequence of motion phases adapted to the specific application requirements (see 2.2).

24 FASTENING BOLTS AND SEALS

Type	Size	Fastening bolts	Seals
DPZO	**1** = 10	4 socket head screws M6x40 class 12.9 Tightening torque = 15 Nm	5 OR 2050 Diameter of ports A, B, P, T: Ø 11 mm (max) 2 OR 108 Diameter of ports X, Y: Ø = 5 mm (max)
	2 = 16	4 socket head screws M10x50 class 12.9 Tightening torque = 70 Nm 2 socket head screws M6x45 class 12.9 Tightening torque = 15 Nm	4 OR 130 Diameter of ports A, B, P, T: Ø 20 mm (max) 2 OR 2043 Diameter of ports X, Y: Ø = 7 mm (max)
	4 = 25	6 socket head screws M12x60 class 12.9 Tightening torque = 125 Nm	4 OR 4112 Diameter of ports A, B, P, T: Ø 24 mm (max) 2 OR 3056 Diameter of ports X, Y: Ø = 7 mm (max)
	4M = 27	6 socket head screws M12x60 class 12.9 Tightening torque = 125 Nm	4 OR 3137 Diameter of ports A, B, P, T: Ø 32 mm (max) 2 OR 3056 Diameter of ports X, Y: Ø = 7 mm (max)
	6 = 32	6 socket head screws M20x80 class 12.9 Tightening torque = 600 Nm	4 OR 144 Diameter of ports A, B, P, T: Ø 34 mm (max) 2 OR 3056 Diameter of ports X, Y: Ø = 7 mm (max)
	8 = 35	6 socket head screws M20x100 class 12.9 Tightening torque = 600 Nm	4 OR 156 Diameter of ports A, B, P, T: Ø 50 mm (max) 2 OR 3056 Diameter of ports X, Y: Ø = 9 mm (max)

25 PLUGS LOCATION FOR PILOT/DRAIN CHANNELS

Depending on the position of internal plugs, different pilot/drain configurations can be obtained as shown below.
To modify the pilot/drain configuration, proper plugs must only be interchanged. The plugs have to be sealed using loctite 270.
Standard valves configuration provides internal pilot and external drain.

DPZO-1 **Pilot channels** **Drain channels**

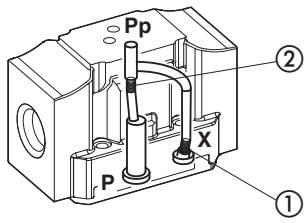

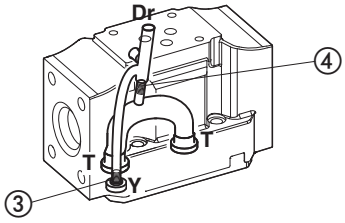

Internal piloting: blinded plug SP-X300F ① in X;
External piloting: blinded plug SP-X300F ② in Pp;
Internal drain: blinded plug SP-X300F ③ in Y;
External drain: blinded plug SP-X300F ④ in Dr.

DPZO-2 **Pilot channels** **Drain channels**

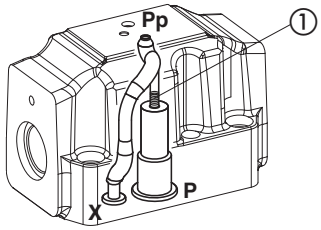

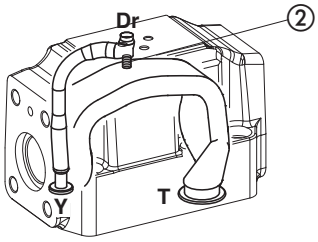

Internal piloting: Without blinded plug SP-X300F ①;
External piloting: Add blinded plug SP-X300F ①;
Internal drain: Without blinded plug SP-X300F ②;
External drain: Add blinded plug SP-X300F ②.

DPZO-4 **Pilot channels** **Drain channels**

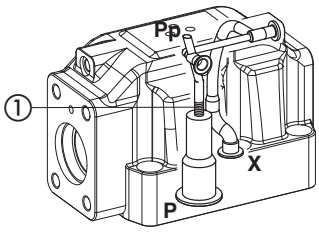

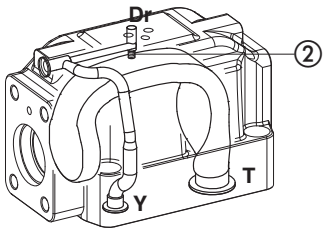

Internal piloting: Without blinded plug SP-X500F ①;
External piloting: Add blinded plug SP-X500F ①;
Internal drain: Without blinded plug SP-X300F ②;
External drain: Add blinded plug SP-X300F ②.

DPZO-6 **Pilot channels** **Drain channels**

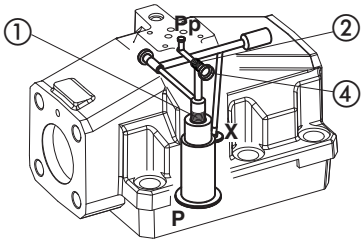

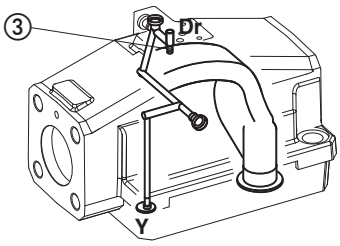

Internal piloting: Without plug ①;
External piloting: Add DIN-908 M16x1,5 in pos ①;
Internal drain: Without blinded plug SP-X300F ③;
External drain: Add blinded plug SP-X300F ③.

DPZO-8 **Pilot channels** **Drain channels**

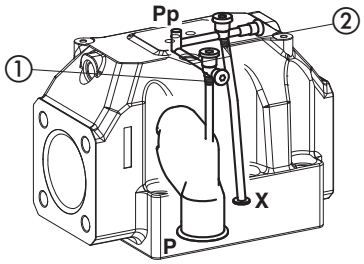

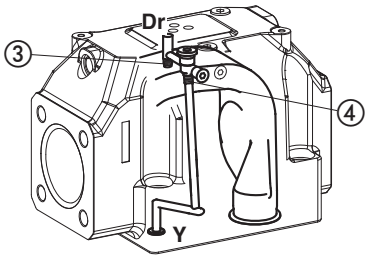

Internal piloting: Without plug ①;
External piloting: Add NPTF 1/8 in pos ①;
plug NPTF 1/8 in pos ②;
Internal drain: Without plug NPTF 1/8 in pos ③;
Add plug NPTF 1/8 in pos ④;
External drain: Add plug NPTF 1/8 in pos ③.

DPZO-LEZ-*-1

ISO 4401: 2005
Mounting surface: 4401-05-05-0-05 (see table P005)

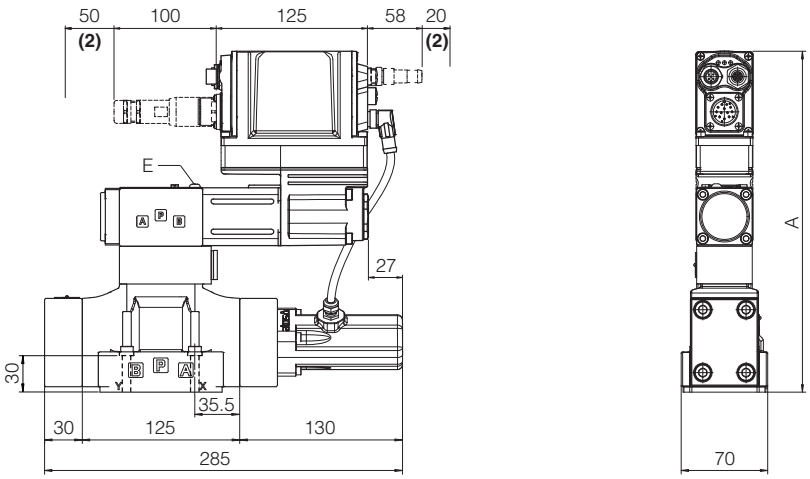

DPZO-*-1	A	E (air bleeding)	Mass [kg]
all versions	271	3	9,8

(1) The indicated dimension refers to the longer connectors or Bluetooth adapter
For dimensions of connectors and Bluetooth adapter, see sections 22.6
(2) Space required for connection cable and for connector removal

DPZO-LEZ-*-2

ISO 4401: 2005
Mounting surface: 4401-07-07-0-05 (see table P005)

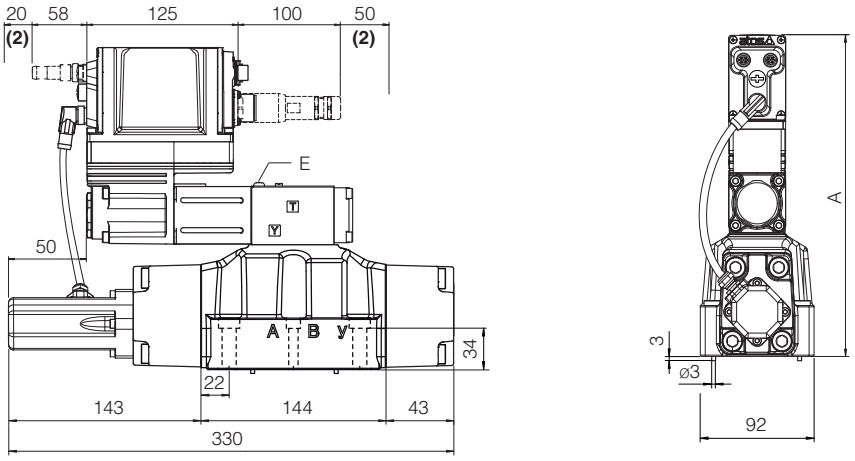

DPZO-*-2	A	E (air bleeding)	Mass [kg]
all versions	252	3	14,4
Option /G	+40	-	+0,9

(1) The indicated dimension refers to the longer connectors or Bluetooth adapter
For dimensions of connectors and Bluetooth adapter, see sections 22.6
(2) Space required for connection cable and for connector removal

Note: for option /B the proportional solenoid, the LVDT transducer and the on-board digital driver + axis card are at side of port B of the main stage

DPZO-LEZ-*-4

ISO 4401: 2005
Mounting surface: 4401-08-08-0-05(see table P005)

DPZO-LEZ-*-4M

ISO 4401: 2005
Mounting surface: 4401-08-08-0-05(see table P005)
ports A, B, P, T Ø 32mm

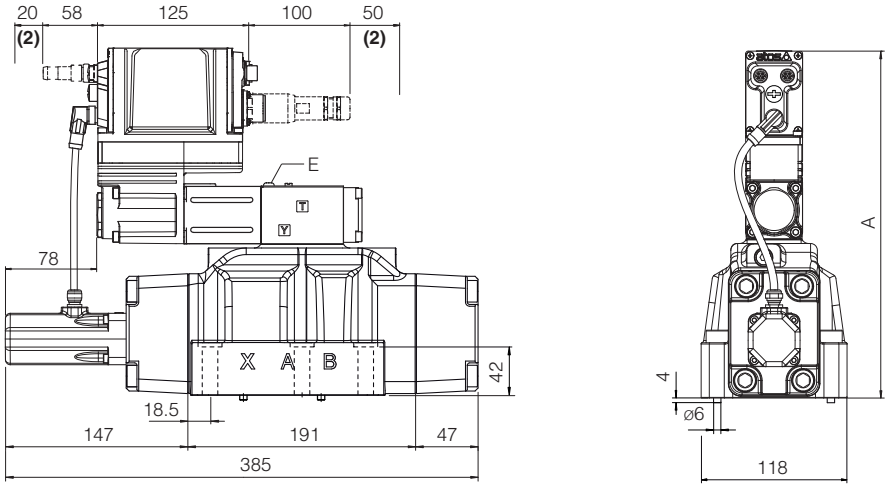

DPZO-*-4 and **DPZO-*-4M**	**A**	**E** (air bleeding)	**Mass [kg]**
all versions	281	3	19,4
Option /G	+40	-	+0,9

(1) The indicated dimension refers to the longer connectors or Bluetooth adapter
For dimensions of connectors and Bluetooth adapter, see sections 22.6
(2) Space required for connection cable and for connector removal

DPZO-LEZ-*-6

ISO 4401: 2005
Mounting surface: 4401-10-09-0-05 (see table P005)

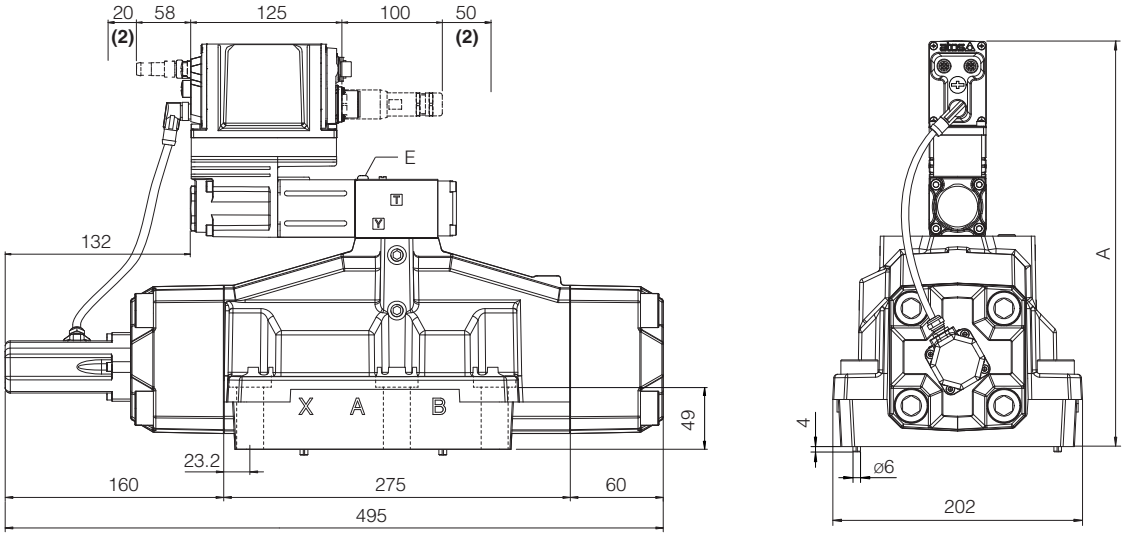

DPZO-*-6	**A**	**E** (air bleeding)	**Mass [kg]**
all versions	323	3	43,4
Option /G	+40	-	+0,9

(1) The indicated dimension refers to the longer connectors or Bluetooth adapter
For dimensions of connectors and Bluetooth adapter, see sections 22.6
(2) Space required for connection cable and for connector removal

Note: for option /B the proportional solenoid, the LVDT transducer and the on-board digital driver + axis card are at side of port B of the main stage

DPZO-LEZ-*-8

ISO 4401: 2005
Mounting surface: 4401-10-09-0-05 (see table P005)

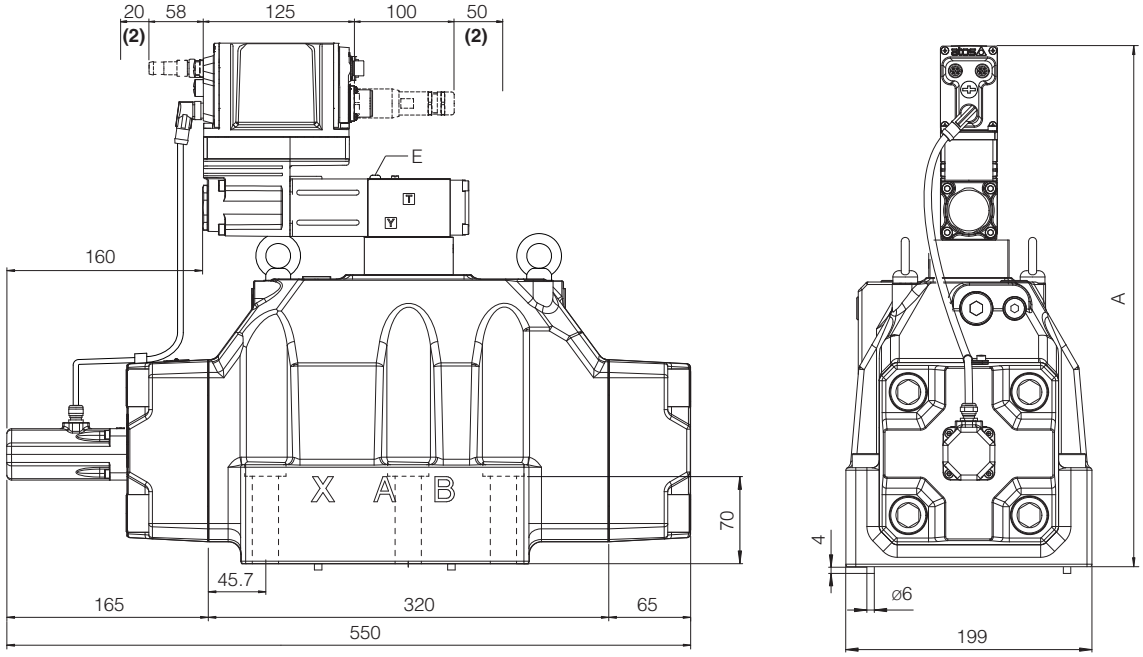

DPZO-*-8	A	E (air bleeding)	Mass [kg]
all versions	417	3	80,4
Option /G	+40	-	+0,9

(1) The indicated dimension refers to the longer connectors or Bluetooth adapter
For dimensions of connectors and Bluetooth adapter, see sections 22.6
(2) Space required for connection cable and for connector removal

Note: for option /B the proportional solenoid, the LVDT transducer and the on-board digital driver + axis card are at side of port B of the main stage

27 RELATED DOCUMENTATION

FS001	Basics for digital electrohydraulics
FS900	Operating and maintenance information for proportional valves
FY100	Safety proportional valves - option /U
FY200	Safety proportional valves - option /K
GS500	Programming tools
GS510	Fieldbus
K800	Electric and electronic connectors
P005	Mounting surfaces for electrohydraulic valves
Y010	Basics for safety components
Z-MAN-RI-LEZ	TEZ/LEZ user manual
Z-MAN-RI-LEZ-S	TEZ/LEZ with p/Q control user manual

Digital Z-BM-TEZ/LEZ axis cards with driver functionality

DIN-rail format, for position and force controls, autotuning

P/Q CONTROL

SMART START-UP WITH AUTOTUNING

SMART TUNING

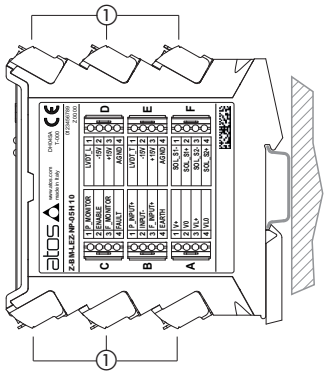

NP

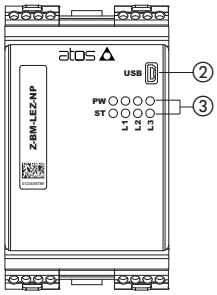

(fieldbus not present)

BC - BP

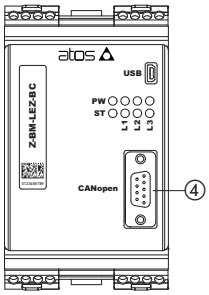

CANopen
PROFIBUS DP

EH - EW - EI - EP

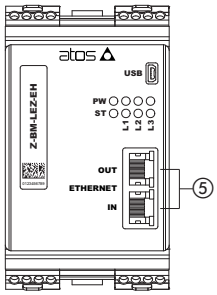

EtherCAT
POWERLINK
EtherNet/IP
PROFINET RT/IRT

① Fast plug-in connectors - factory plugged
② Bluetooth/USB connection
③ Leds for diagnostic
④ CANopen, PROFIBUS DP connector
⑤ EterCAT, POWERLINK, Ethernet/IP, PROFINET RT/IRT connectors

Z-BM-TEZ/LEZ

Digital axis cards perform the driver functions for proportional valves plus the position closed loop control of the linear or rotative actuator to which the proportional valve is connected.
Z-BM-TEZ execution controls direct and pilot operated directional valves with one LVDT transducer.
Z-BM-LEZ execution controls directional pilot operated valves with two LVDT transducers.

The controlled actuator has to be equipped with position transducer (analog, potentiometer, SSI or Encoder) to read the axis position feedback.

Alternated p/Q control may be set by software and add the force limitation to position regulation, requiring pressure or force transducers installation.

Smart Start-up procedure makes the commissioning quicker and easier, thanks to the Autotuning and Smart Tuning functionalities. Multiple PID sets allows to easily switch axis behaviour according to machine cycle.

General Features:

- up to 11 fast plug-in connectors
- Mini USB connector for Bluetooth/USB connection - always present
- DB9 connector for CANopen and PROFIBUS DP
- RJ45 connectors input/output for EtherCAT, POWERLINK, EtherNet/IP, PROFINET IO RT/IRT
- 8 leds for diagnostics (see 14.1)
- Electrical protection against reverse polarity of power supply
- Ambient temperature range: -20 ÷ +50 °C
- Plastic box with IP20 protection degree and standard DIN-rail mounting
- CE mark according to EMC directive

Software Features:

- Intuitive graphic interface
- Smart Start-up with autotuning
- Smart tuning
- Multiple sets
- Internal generation of motion cycle
- Complete diagnostics of axis status
- Internal oscilloscope function
- In field firmware update through USB

1 MODEL CODE

Z-BM - **TEZ** - **NP** - **01H** / ***** ***** / *****

Off-board electronic axis card in DIN rail format

TEZ = digital full driver + axis card, for valves with one LVDT transducer
LEZ = digital full driver + axis card, for valves with two LVDT transducers

Fieldbus interface:
NP = Not Present
BC = CANopen
BP = PROFIBUS DP
EH = EtherCAT
EW = POWERLINK
EI = EtherNet/IP
EP = PROFINET RT/IRT

01H = for single solenoid proportional valves
05H = for double solenoid proportional valves (only for **TEZ**)

Options, see section 16 **:**
A = max current limitation for Ex-proof valves
C = current feedback 4 ÷ 20 mA for LVDT transducers, only in combination with option A

Series number

Set code (see section 15)

2 BLOCK DIAGRAM EXAMPLE

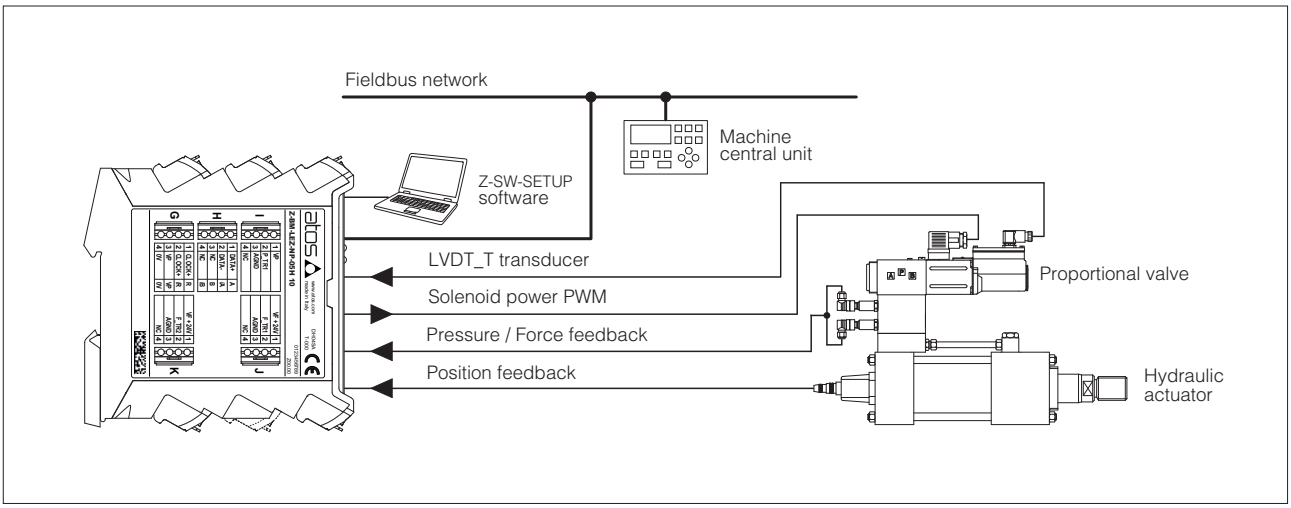

Note: block diagram example for alternated position/force control, with fieldbus interface

3 VALVES RANGE

Valves	Directional		
Industrial Tech table	**DHZO-T, DKZOR-T** F168	**DLHZO-T, DLKZOR-T** F180	**DPZO-L** F178
Ex-proof Tech table	-	**DLHZA-T, DLKZA-T** FX140	-
Axis card model	**Z-BM-TEZ**		**Z-BM-LEZ**

4 POSITION CONTROL

4.1 External reference signal

Axis card controls in closed loop the actuator position according to a position reference signal from the machine central unit.

Position profile can be managed in two ways (software selectable):

- Without trajectory generation **(a)**: the axis card receives from the machine central unit the position reference signal and follows it at any given instant
- With trajectory generation **(b)**: the axis card receives from the machine central unit just the final target position and internally generates a position profile limiting acceleration, velocity and deceleration

The position reference signal can be software selected between Analog reference **(c)** and Fieldbus reference **(d)**.

Refer to the axis card user manual for further details on position control features.

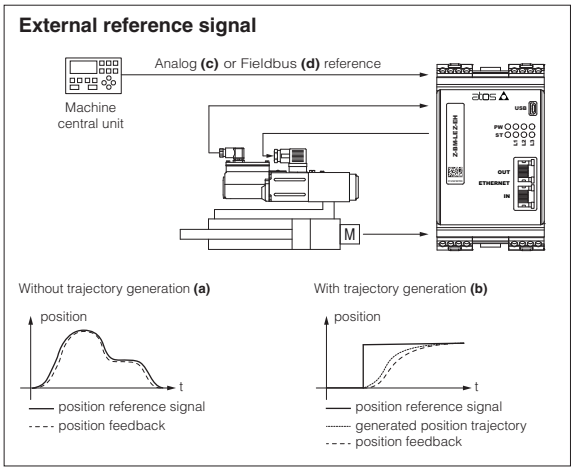

4.2 Automatic cycle

Axis card controls in closed loop the actuator position according to an internally generated automatic cycle: only start, stop and switch-over commands are required from the machine electronic central unit by means On-off commands **(e)** or Fieldbus commands **(f)**.

Atos PC software allows to realize an automatic cycle according to the application requirements. Refer to the axis card user manual for further details on automatic cycle features.

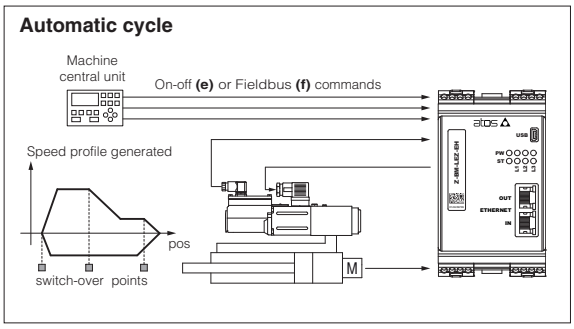

5 ALTERNATED POSITION / FORCE CONTROL

The alternated pressure or force closed loop control can be added to the actuator standard position control, requiring one or two remote transducers (pressure or force) that have to be installed on the actuator, see below functional schemes.

The position/force controls are operated according to two separate reference signals and a dedicated algorithm automatically selects which control is active time by time.

The dynamics of the switching between the two controls can be regulated thanks to specific software setting, in order to avoid instability and vibrations.

Position control is active (see phase ① and ③ at side) when the actuator force is lower than the relevant reference signal - the valve controls the actuator position by closed-loop regulation.

Force control is active (see phase ② and ④ at side) when the actuator actual force, measured by remote transducers, grows up to the relevant reference signal - the axis card reduces the valve's regulation in order to limit the actuator force; if the force tends to decrease under its reference signal, the position control returns active.

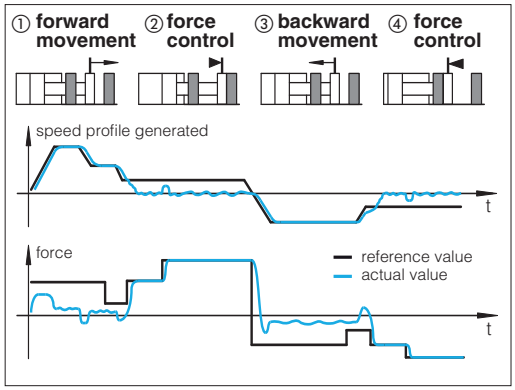

Alternated control configurations - software selectable

SF	SL
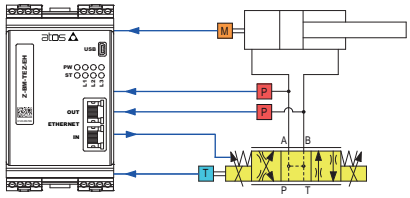	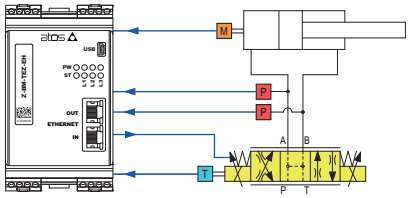
two remote pressure transducers have to be installed on the actuator's ports; the actuator force is calculated by the pressure feedbacks (Pa - Pb)	one load cell transducer has to be installed between the actuator and the controlled load

T valve's spool transducer	M actuator's position transducer	P pressure transducer	L load cell

SF – position/force control
Adds force control to standard position control and permits to limit the max force in two directions controlling in closed loop the delta pressure acting on both sides of the hydraulic actuator. Two pressure transducers have to be installed on both hydraulic line.

SL – position/force control
Adds force control to standard position control and permits to limit the max force in one or two directions controlling in closed loop the force performed by the hydraulic actuator. A load cell has to be installed on hydraulic actuator.

General Notes:

- servoproportional type DLHZO, DLKZOR and DPZO-L are strongly recommended for high accuracy applications see tech tables **F180**, **F175**
- auxiliary check valves are recommended in case of specific hydraulic configuration requirements in absence of power supply or fault, see tech table **EY105**
- for additional information about alternated p/Q controls configuration please refer to tech table **FS500**
- Atos technical service is available for additional evaluations related to specific applications usage

6 GENERAL NOTES

Atos digital proportionals valves are CE marked according to the applicable directives (e.g. Immunity and Emission EMC Directive).
Installation, wirings and start-up procedures must be performed according to the general prescriptions shown in tech table **FS900** and in the user manuals included in the Z-SW-SETUP programming software.

7 VALVE SETTINGS AND PROGRAMMING TOOLS - see tech. table GS500

Free downloadable software for PC allows to set all valve functional parameters and to access complete diagnostic information of digital axis controls via Bluetooth/USB service port.
Atos Z-SW-SETUP PC software supports all Atos digital axis controls and it is available at www.atos.com in MyAtos area.

⚠ **WARNING: axis card USB port is not isolated!** For E-C-SB-USB/BM cable, the use of E-A-SB-USB/OPT isolator adapter is highly recommended for PC protection

⚠ **WARNING:** for the list of countries where the Bluetooth adapter has been approved, see tech. table **GS500**

Bluetooth or USB connection

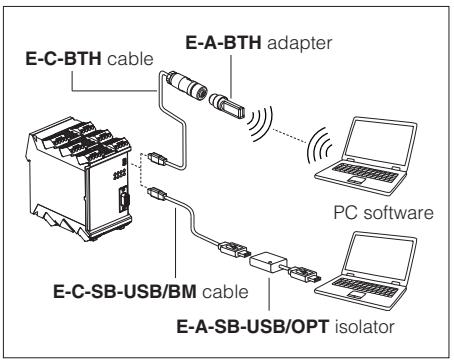

8 SMART START-UP

The automatic procedure supports the user during the commissioning phases of the axis control with guided procedures:

- **General setting**
It assists the user in system data setup, as like cylinder stroke, diameters, load mass, configure analog/digital signals and communication interface, position transducer setup.
- **System check**
It automatically executes position open loop movements to set axis control parameters, position transducer calibration and verify cylinder stroke.
- **Position autotuning**
It automatically determines the optimal PID parametrization of the position control adapting the dynamic response to guarantee control precision and axis stability. Once the procedure is started, the control performs few automatic position open loop movements of the actuator, during which control parameters are calculated and stored.

9 SMART TUNING

Once the Smart Start-up procedure has been completed, the Smart tuning feature allows to further refine the position control response by choosing from 3 different levels of performance in positioning:

- **dynamic** best dynamics and accuracy (default factory setting)
- **balanced** average dynamics and accuracy
- **smooth** attenuated dynamics and accuracy to improve control stability in critical applications or in environments with electrical disturbances

Settings can be changed any time via Z-SW-SETUP software or fieldbus.

If required, control performance can be further customized by modifying PID parameter via Z-SW-SETUP software.

1 = position reference signal
2 = generated position trajectory
3 = dynamic
4 = balanced
5 = smooth

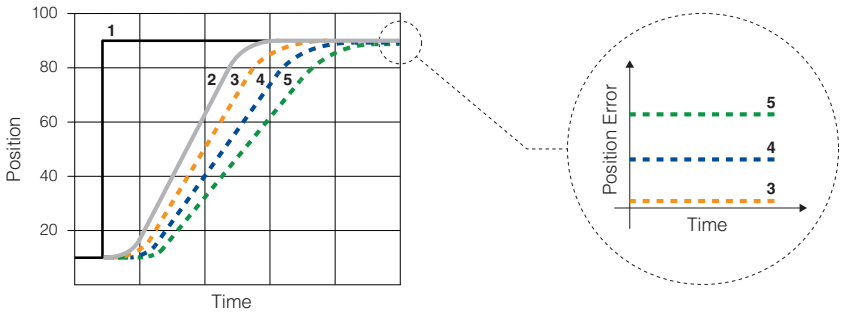

10 MULTIPLE SETS

Multiple PID sets allows to easily switch axis behaviour according to machine cycle, selecting between independent groups of parameters for:

- **position control PID**
- **force control PID and p/Q logics switching criteria**

Settings can be changed any time via Z-SW-SETUP software, fieldbus or digital input signals.

11 FIELDBUS - see tech. table **GS510**

Fieldbus allows valve direct communication with machine control unit for digital reference, valve diagnostics and settings. These execution allow to operate the valves through fieldbus or analog signals available on the main connector.

12 APPLICATION EXAMPLES

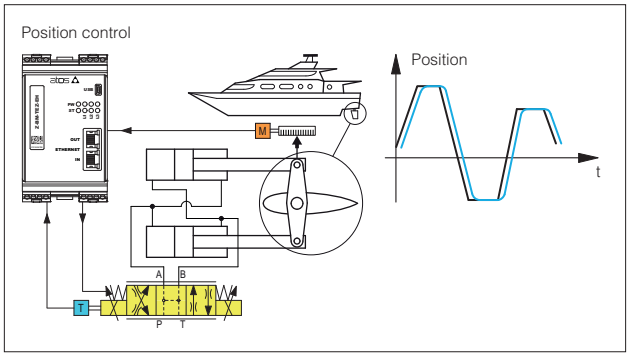

Hydraulic steering wheel in marine applications

Rudder controls on motor yachts and sail boats requires smooth control for precise and reliable operations.

Z-BM-TEZ/LEZ axis cards perform the rudder position control system, ensuring accurate and repetitive regulations for a comfortable ride, thanks to:

- analog position reference mode for real time controls
- analog position transducer for simple and compact solution
- position PID control parameters to optimize the system response
- complete diagnostic information for advanced system monitoring

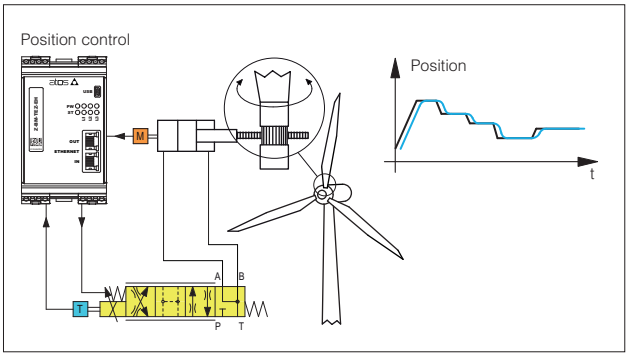

Wind turbines

The pitch control of the rotor blades is required to maximize the energy production. Accurate positioning, decentralized intelligence as well as long service life and reliability are required.

Z-BM-TEZ/LEZ axis cards perform high quality regulation of the blade pitch simplifying the system architecture, thanks to:

- SSI digital position transducer for high precision control
- complete remote system management with fieldbus interface
- position PID selection to adapt the position control to the different wind conditions

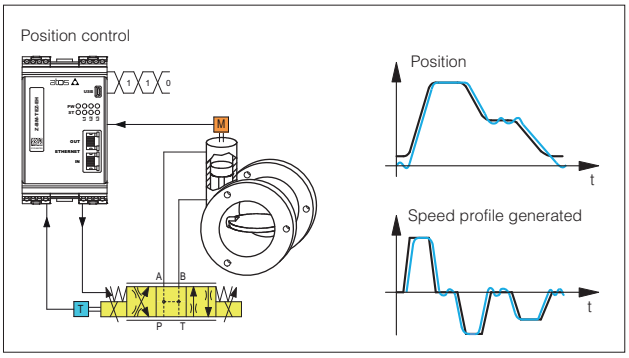

Process valves

Process valves motion regulation requires smooth and remote controls due to wide distributed applications.

Z-BM-TEZ/LEZ axis cards allow remote control, thanks to:

- internal reference generation with maximum speed and acceleration settings for standing alone axis control
- potentiometer position transducer for compact and cost effective solution
- fieldbus connection for easy parameterization and remote commands

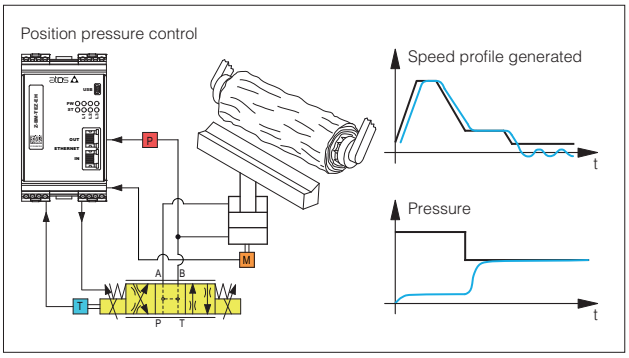

Wood machinery

Hydraulic wood machines require configurable and repetitive motion profiles, accurate position controls, and digital signals for synchronization purpose.

Z-BM-TEZ/LEZ axis cards allow remote control, thanks to:

- internal reference generation with maximum speed and acceleration settings
- analog position transducer for simple and reliable solution
- pressure transducer for alternated pressure control
- fieldbus connection for remote parameterization, commands, and axis card state indication

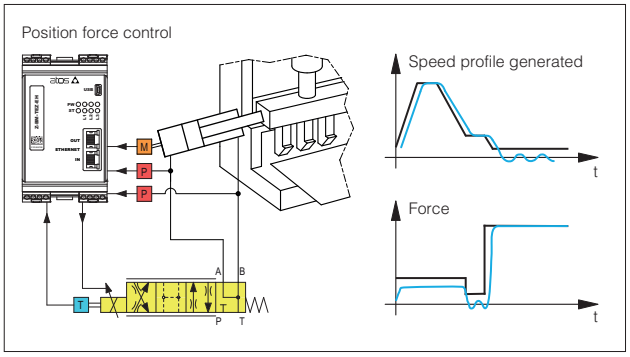

Bending Machines

Machine tools for cold-forming flat sheets require complete, automatic, programmable and flexible machine control to produce sheet metal panels from punched blank.

Z-BM-TEZ/LEZ axis cards combine high level position regulation with accurate force control to provide in a single device a complete and dedicated solution, thanks to:

- internal reference generation to simplify the machine control cycle
- digital position sensor for high resolution measurement system
- two pressure transducers for alternated force control
- fieldbus interface for easy machine control integration
- auxiliary digital outputs for system status indication (target reached, force control active)

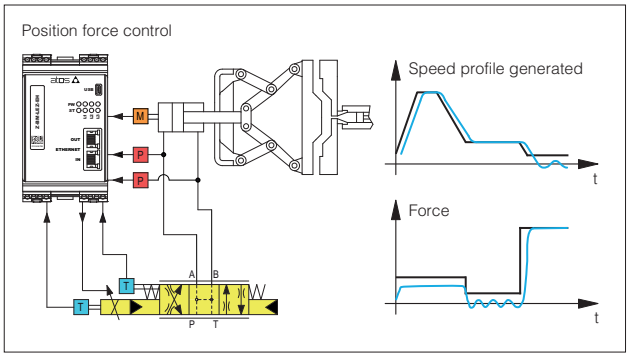

Die-casting machinery

Clamp movements in die-casting phases involve fast/slow motion cycle with accurate and repetitive alternated position/force controls for the mould safety functions.

Z-BM-TEZ/LEZ axis cards, with alternated position/force control, simplify the hydraulic + electronic system architecture, thanks to:

- internal reference generation for repetitive working cycles
- SSI digital position transducer for accurate axis control
- two pressure transducers for alternated force control
- auxiliary digital inputs/output to synchronize the machine functions
- fieldbus connection for machine remote control and advanced diagnostics

13 MAIN CHARACTERISTICS

Power supplies	Nominal : +24 VDC Rectified and filtered : VRMS = 20 ÷ 32 VMAX (ripple max 10 % VPP)			
Max power consumption	50 W			
Current supplied to solenoids	IMAX = 3.0 A for standard axis card IMAX = 2.5 A for ex-proof axis card (**/A option**)			
Analog input signals	Voltage: range ±10 VDC (24 VMAX tolerant) Input impedance: Ri > 50 kΩ Current: range ±20 mA Input impedance: Ri = 500 Ω			
Monitor outputs	Output range: voltage ±10 VDC @ max 5 mA current ±20 mA @ max 500 Ω load resistance			
Enable input	Range: 0 ÷ 5 VDC (OFF state), 9 ÷ 24 VDC (ON state), 5 ÷ 9 VDC (not accepted); Input impedance: Ri > 10 kΩ			
Fault output	Output range: 0 ÷ 24 VDC (ON state > [power supply - 2 V] ; OFF state < 1 V) @ max 50 mA; external negative voltage not allowed (e.g. due to inductive loads)			
Alarms	Solenoid not connected/short circuit, cable break with current reference signal, over/under temperature, position control monitoring, valve spool transducer malfunctions, alarms history storage function			
Position transducers power supply	+24 VDC @ max 100 mA or +5 VDC @ max 100 mA are software selectable			
Pressure/Force transducers power supply	+24 VDC @ max 100 mA			
Format	Plastic box ; IP20 protection degree ; L 35 - H 7,5 mm DIN-rail mounting as per EN60715			
Ambient temperature range	-20 ÷ +50 °C (storage -25 ÷ +85 °C)			
Mass	Approx. 450 g			
Additional characteristics	8 leds for diagnostic; protection against reverse polarity of power supply			
Compliance	CE according to EMC directive 2014/30/EU (Immunity: EN 61000-6-2; Emission: EN 61000-6-3) RoHS Directive 2011/65/EU as last update by 2015/863/EU REACH Regulation (EC) n°1907/2006			
Communication interface	USB Atos ASCII coding	CANopen EN50325-4 + DS408	PROFIBUS DP EN50170-2/IEC61158	EtherCAT, POWERLINK, EtherNet/IP, PROFINET IO RT / IRT EC 61158
Communication physical layer	not insulated USB 2.0 + USB OTG	optical insulated CAN ISO11898	optical insulated RS485	Fast Ethernet, insulated 100 Base TX
Recommended wiring cable	LiYCY shielded cables: 0,5 mm² max 50 m for logic - 1,5 mm² max 50 m for power supply Note: for transducers wiring cable please consult the transducers datasheet			
Max conductor size (see section 20)	2,5 mm²			

Note: a maximum time of 800 ms (depending on communication type) has to be considered between the axis card energizing with the 24 VDC power supply and when the valve is ready to operate. During this time the current to the valve coils is switched to zero.

14 CONNECTIONS AND LEDS

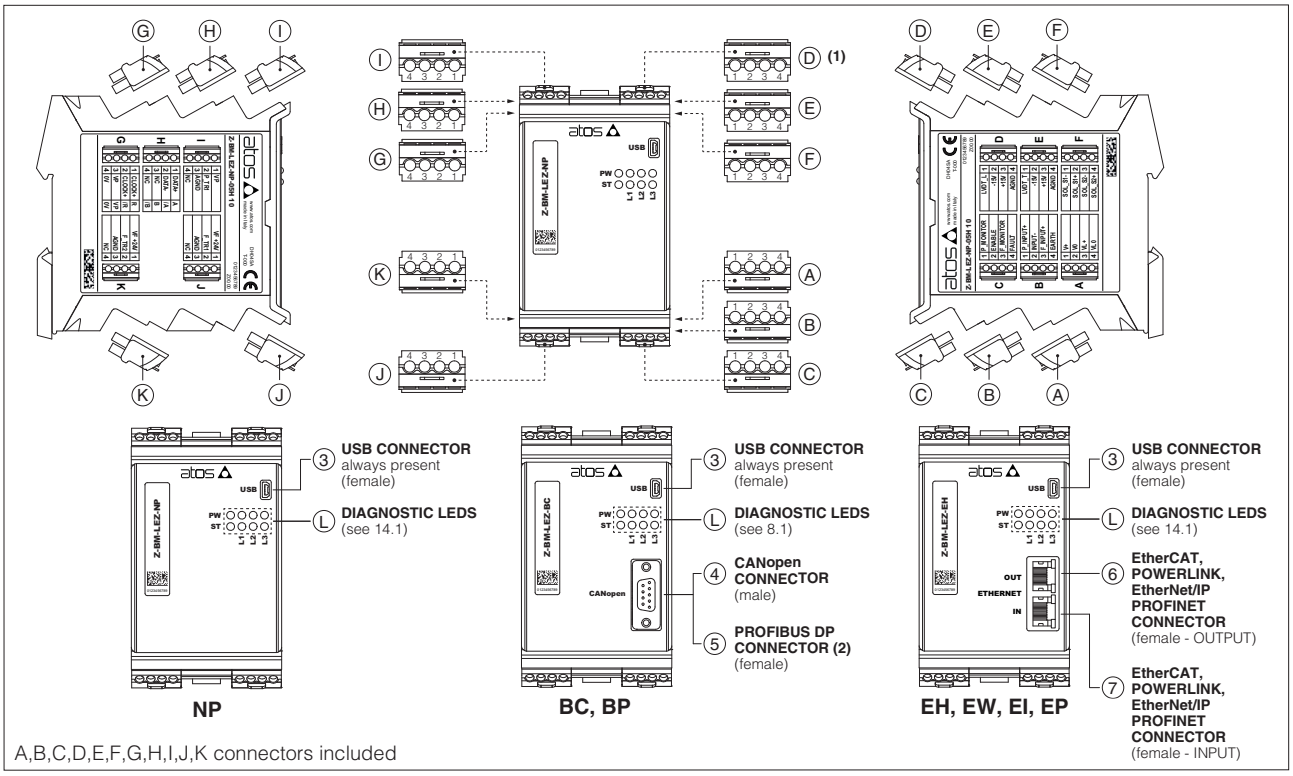

(1) D connector is available only for Z-BM-LEZ-**-01H

(2) To interface with Siemens 6ES7972-0BA12-0XA connector, it is mandatory to use also one of the following adapters to avoid interference with the USB connector: DG909MF1 - the connector will be oriented upwards; DG909MF3 - the connector will be oriented downwards

14.1 Diagnostic LEDs (L)

Eight leds show axis card operative conditions for immediate basic diagnostics. Please refer to the axis card user manual for detailed information.

FIELDBUS / LEDS	NP Not Present	BC CANopen	BP PROFIBUS DP	EH EtherCAT	EW POWERLINK	EI EtherNet/IP	EP PROFINET
L1	VALVE STATUS			LINK/ACT			
L2	NETWORK STATUS			NETWORK STATUS			
L3	SOLENOID STATUS			LINK/ACT			
PW	OFF = Power supply OFF		ON = Power supply ON				
ST	OFF = Fault present		ON = No fault				

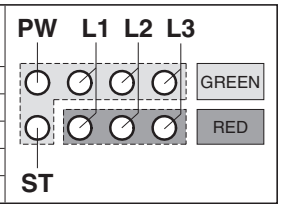

14.2 Connectors - 4 pin

CONNECTOR	PIN	SIGNAL	TECHNICAL SPECIFICATIONS	NOTES
A	A1	**V+**	Power supply 24 VDC	Input - power supply
	A2	**V0**	Power supply 0 VDC	Gnd - power supply
	A3	**VL+**	Power supply 24 VDC for axis card logic and communication	Input - power supply
	A4	**VL0**	Power supply 0 VDC for axis card logic and communication	Gnd - power supply
B	B1	**P_INPUT+**	Position reference input signal: ±10 VDC / ±20 mA maximum range. default is ±10 VDC	Input - analog signal **Software selectable**
	B2	**INPUT-**	Negative reference input signal for P_INPUT+ and F_INPUT+	Input - analog signal
	B3	**F_INPUT+**	Force reference input signal (SF, SL controls): ±10 VDC / ±20 mA maximum range; default is ±10 VDC	Input - analog signal **Software selectable**
	B4	**EARTH**	Connect to system ground	
C	C1	**P_MONITOR**	Position monitor output signal: ±10 VDC / ±20 mA maximum range, referred to AGND; default is ±10 VDC	Output - analog signal **Software selectable**
	C2	**ENABLE**	Enable (24 VDC) or disable (0 VDC) the axis card, referred to VL0	Input - on/off signal
	C3	**F_MONITOR**	Force (SF, SL controls) or valve spool position (SN control) monitor output signal: ±10 VDC / ±20 mA maximum range, referred to AGND; default is ±10 VDC	Output - analog signal **Software selectable**
	C4	**FAULT**	Fault (0 VDC) or normal working (24 VDC), referred to VL0	Output - on/off signal
D (1)	D1	**LVDT_L**	Main stage valve LVDT position transducer signal	Input - analog signal
	D2	**-15V**	Main stage valve LVDT position transducer power supply -15V	Output power supply
	D3	**+15V**	Main stage valve LVDT position transducer power supply +15V	Output power supply
	D4	**AGND**	Common gnd for transducer power supply and monitor outputs	Common gnd
E	E1	**LVDT_T**	Direct valve or pilot valve LVDT position transducer signal	Input - analog signal
	E2	**-15V**	Direct valve or pilot valve LVDT position transducer power supply -15V	Output power supply
	E3	**+15V**	Direct valve or pilot valve LVDT position transducer power supply +15V	Output power supply
	E4	**AGND**	Common gnd for transducer power supply and monitor outputs	Common gnd
F	F1	**SOL_S1-**	Negative current to solenoid S1	Output - power PWM
	F2	**SOL_S1+**	Positive current to solenoid S1	Output - power PWM
	F3	**SOL_S2-**	Negative current to solenoid S2	Output - power PWM
	F4	**SOL_S2+**	Positive current to solenoid S2	Output - power PWM
G	G1	Digital position transducer SSI or Encoder is software selectable: - SSI connections see 14.3 - Encoder connections see 14.4		
	G2			
	G3			
	G4			
H	H1	Digital position transducer SSI or Encoder is software selectable: - SSI connections see 14.3 - Encoder connections see 14.4		
	H2			
	H3			
	H4			
I	I1	**VP**	Power supply: +24VDC , +5VDC or OFF (default OFF)	Output - power supply **Software selectable**
	I2	**P_TR1**	Analog position transducer input signal ±10 VDC / ±20 mA maximum range; default is ±10 VDC	Input - analog signal **Software selectable**
	I3	**AGND**	Common gnd for transducer power supply and signals	Common gnd
	I4	**NC**	Do not connect	
J	J1	**VF +24V**	Power supply: +24VDC or OFF (default OFF)	Output - power supply **Software selectable**
	J2	**F_TR1**	1st signal pressure/force transducer: ±10 VDC / ±20 mA maximum range; default is ±10 VDC	Input - analog signal **Software selectable**
	J3	**AGND**	Common gnd for transducer power supply and signals	Common gnd
	J4	**NC**	Do not connect	
K	K1	**VF +24V**	Power supply: +24VDC or OFF (default OFF)	Output - power supply **Software selectable**
	K2	**F_TR2**	2nd signal pressure transducer (only for SF): ±10 VDC / ±20 mA maximum range; default is ±10 VDC	Input - analog signal **Software selectable**
	K3	**AGND**	Common gnd for transducer power supply and signals	Common gnd
	K4	**NC**	Do not connect	

(1) D connector is available only for Z-BM-LEZ-**-01H

14.3 SSI connectors signals - 4 pin

G	G1	**CLOCK+**	Serial synchronous clock (+)	Output - on/off signal
	G2	**CLOCK-**	Serial synchronous clock (-)	Output - on/off signal
	G3	**VP**	Power supply: +24VDC , +5VDC or OFF (default OFF)	Output - power supply **Software selectable**
	G4	**0V**	Common gnd for transducer power and signals	Common gnd

H	H1	**DATA+**	Serial position data (+)	Input - on/off signal
	H2	**DATA-**	Serial position data (-)	Input - on/off signal
	H3	**NC**	Do not connect	
	H4	**NC**	Do not connect	

Note: for Balluff BTL7 with SSI interface only special code SA433 is supported

SSI connection - example

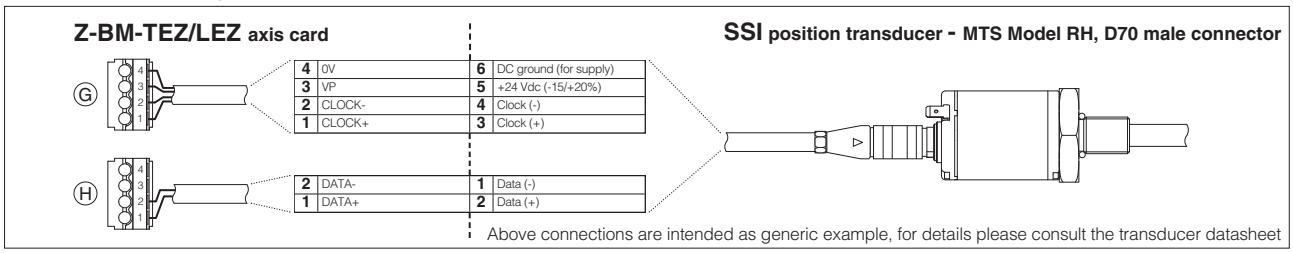

14.4 Encoder connectors signals - 4 pin

G	G1	**R**	Input channel R	Input - on/off signal
	G2	**/R**	Input channel /R	Input - on/off signal
	G3	**VP**	Power supply: +24VDC , +5VDC or OFF (default OFF)	Output - power supply **Software selectable**
	G4	**0V**	Common gnd for transducer power and signals	Common gnd

H	H1	**A**	Input channel A	Input - on/off signal
	H2	**/A**	Input channel /A	Input - on/off signal
	H3	**B**	Input channel B	Input - on/off signal
	H4	**/B**	Input channel /B	Input - on/off signal

Encoder connection - example

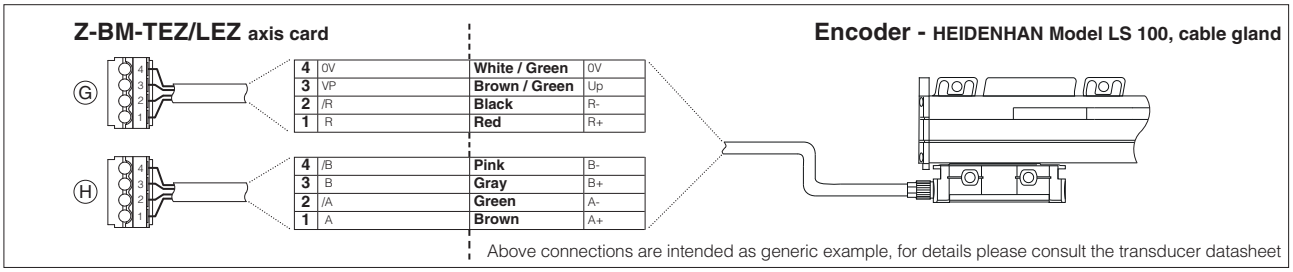

14.5 Pressure/force transducers connection - example

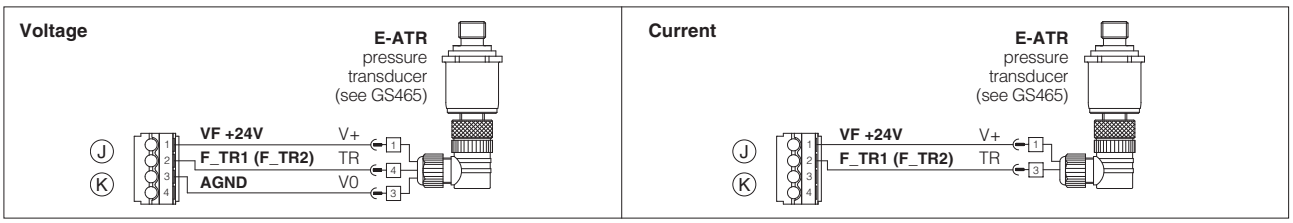

14.6 Communication connectors ③ - ④ - ⑤ - ⑥ - ⑦

③ **USB connector - Mini USB type B** always present		
PIN	**SIGNAL**	**TECHNICAL SPECIFICATION** (1)
1	**+5V_USB**	Power supply
2	**D-**	Data line -
3	**D+**	Data line +
4	**ID**	Identification
5	**GND_USB**	Signal zero data line

④ **BC fieldbus execution, connector - DB9 - 9 pin**		
PIN	**SIGNAL**	**TECHNICAL SPECIFICATION** (1)
2	**CAN_L**	Bus line (low)
3	**CAN_GND**	Signal zero data line
5	**CAN_SHLD**	Shield
7	**CAN_H**	Bus line (high)

⑤ **BP fieldbus execution, connector - DB9 - 9 pin**		
PIN	**SIGNAL**	**TECHNICAL SPECIFICATION** (1)
1	**SHIELD**	
3	**LINE-B**	Bus line (low)
5	**DGND**	Data line and termination signal zero
6	**+5V**	Termination supply signal
8	**LINE-A**	Bus line (high)

⑥ ⑦ **EH, EW, EI, EP fieldbus execution, connector - RJ45 - 8 pin**		
PIN	**SIGNAL**	**TECHNICAL SPECIFICATION** (1)
1	**TX+**	Transmitter - white/orange
2	**TX-**	Transmitter - orange
3	**RX+**	Receiver - white/green
6	**RX-**	Receiver - green

(1) Shield connection on connector's housing is recommended

15 SET CODE

The basic calibration of axis card is factory preset, according to the proportional valve to be coupled. These pre-calibrations are identified by the set code at the end of axis card model code (see section 1). For correct set code selection, please include in the axis card order also the complete code of the coupled proportional valve. For further information about set code, please contact Atos technical office.

16 POWER SUPPLY AND SIGNALS SPECIFICATIONS

Generic electrical output signals of the valve (e.g. fault or monitor signals) must not be directly used to activate safety functions, like to switch-ON/OFF the machine's safety components, as prescribed by the European standards (Safety requirements of fluid technology systems and components-hydraulics, ISO 4413).

16.1 Power supply (V+ and V0)

The power supply (pin A1 and A2) must be appropriately stabilized or rectified and filtered: apply at least a 10000 μF/40 V capacitance to single phase rectifiers or a 4700 μF/40 V capacitance to three phase rectifiers.

⚠ A safety fuse is required in series to each power supply: 2,5 A time lag fuse.

16.2 Power supply for axis card logic and communication (VL+ and VL0)

The power supply (pin A3 and A4) for axis card logic and communication must be appropriately stabilized or rectified and filtered: apply at least a 10000 μF/40 V capacitance to single phase rectifiers or a 4700 μF/40 V capacitance to three phase rectifiers.
The separate power supply for axis card logic, allow to remove solenoid power supply from pin A1 and A2 maintaining active the diagnostics, USB and fieldbus communications.

⚠ A safety fuse is required in series to each axis card logic and communication power supply: 500 mA fast fuse.

16.3 Position reference input signal (P_INPUT+)

Functionality of P_INPUT+ signal (pin B1), depends on axis card reference mode, see section 4 :
external analog reference (see 4.1): input is used as reference for control in closed loop the actuator position.
Input signal can be configured via software selecting between voltage and current, within a maximum range of ±10 V_{DC} or ± 20 mA; default is ±10 V_{DC}

external fieldbus reference (see 4.1) *or automatic cycle* (see 4.2)*:* analog reference input signal can be used as on-off commands with input range 0 ÷ 24V_{DC}.

16.4 Force reference input signal (F_INPUT+)

Functionality of F_INPUT+ signal (pin B3), depends on selected axis card reference mode and alternated control options, see section 5 :
SL, SF controls and external analog reference selected : input is used as reference for the axis card pressure/force closed loop.
Input signal can be reconfigured via software selecting between voltage and current, within a maximum range of ±10 V_{DC} or ± 20 mA; default is ±10 V_{DC}

SN control or fieldbus reference selected: analog reference input signal can be used as on-off commands with input range 0 ÷ 24V_{DC}

16.5 Position monitor output signal (P_MONITOR)

The axis card generates an analog output signal (pin C1) proportional to the actual axis position; the monitor output signal can be software set to show other signals available in the axis card (e.g. analog reference, fieldbus reference, position error, valve spool position).
The output range and polarity are software selectable within the maximum range ±10 V_{DC} or ±20 mA; default is ±10 V_{DC}

16.6 Force monitor output signal (F_MONITOR)

The axis card generates an analog output signal (pin C3) according to alternated force control option:
SN control: output signal is proportional to the actual valve spool position
SL, SF controls: output signal is proportional to the actual pressure/forcel applied to the cylinder's rod end
Monitor output signals can be software set to show other signals available in the axis card (e.g. analog reference, force reference).
The output range and polarity are software selectable within the maximum range ±10 V_{DC} or ±20 mA; default is ±10 V_{DC}

16.7 Enable Input Signal (ENABLE)

To enable the axis card, a 24V_{DC} voltage has to be applied on pin C2
When the Enable signal is set to zero the axis card can be software set to perform one of the following actions:
- maintain the actuator actual position in close loop control
- move towards a predefined position in closed loop control and maintains the reached position (hold position)
- move forward or backward in open loop (only the valve's closed loop remain active)

16.8 Fault output signal (FAULT)

Fault output signal (pin C4) indicates fault conditions of the axis card (solenoid short circuits/not connected, reference or transducer signalcable broken, maximum error exceeded, etc.). Fault presence corresponds to 0 V_{DC}, normal working corresponds to 24 V_{DC}
Fault status is not affected by the status of the Enable input signal.
Fault output signal can be used as digital output by software selection.

16.9 Position transducer input signals

A position transducer must be always directly connected to the axis card. Position digital input signals are factory preset to binary SSI, they can be reconfigured via software selecting between binary/gray SSI, Encoder or generic transducer with analog interface.
Input signals can be reconfigured via software selecting between voltage and current, within a maximum range of ±10 V_{DC} or ± 20 mA; default is ±10 V_{DC}
Refer to position transducer characteristics to select the transducer type according to specific application requirements, see section 17 .

16.10 Remote pressure/force transducer input signals (F_TR1 and F_TR2) - SF, SL controls

Analog remote pressure transducers or load cell can be directly connected to the axis card.
Input signal can be reconfigured via software selecting between voltage and current, within a maximum range of ±10 V_{DC} or ± 20 mA; default is ±10 V_{DC}
Refer to pressure/force transducer characteristics to select the transducer type according to specific application requirements, see section 17 .

16.11 Main stage and direct or pilot position transducer input signals (LVDT_L and LVDT_T)

Main stage (LVDT_L pin D1) and direct or pilot (LVDT_T pin E1) position transducer integrated to the valve have to be directly connected to the axis card using ±15 V_{DC} supply output available at pin D2, D3 and pin E2, E3.
Note: transducer input signals working range is ±10 V_{DC} for standard or 4 ÷ 20 mA for /C option and **cannot** be reconfigured via software (input signals setting depends to the axis card set code).

16.12 Possible combined options: /AC

17 ACTUATOR'S TRANSDUCER CHARACTERISTICS

17.1 Position transducers

The accuracy of the position control is strongly dependent to the selected position transducer. Four different transducer interfaces are available on the axis cards, depending to the system requirements: analog signal (analog), SSI or Encoder (digital).
Transducers with digital interface allow high resolution and accurate measures, that combined with fieldbus communication grants highest performances. Transducers with analog interface grant simple and cost effective solutions.

17.2 Pressure/force transducers

The accuracy of the pressure/force control is strongly dependent to the selected pressure/force transducer (see section 5).
Alternated force controls require to install pressure transducers or load cell to measure the actual pressure/force values.
Pressure transducers allow easy system integration and cost effective solution for alternated position/force controls (see tech table **GS465** for pressure transducers details). Load cell transducers allow the user to get high accuracy and precise regulations for alternated position/force control.
The characteristics of the remote pressure/force transducers must be always selected to match the application requirements and to obtain the best performances: transducer nominal range should be at least 115%÷120% of the maximum regulated pressure/force.

17.3 Transducers characteristics & interfaces - following values are just for reference, for details please consult the transducer's datasheet

	Position			**Pressure/Force**
Input type	Analog	SSI **(3)**	Incremental Encoder	Analog
Power supply **(1)**	+24 VDC	+24 VDC	+5 VDC or +24 VDC	+24 VDC
Axis card interface	0 ÷ 10V or 4 ÷ 20 mA	Serial SSI binary/gray	TTL 5Vpp - 150 KHz	±10 VDC or 4 ÷ 20 mA
Max speed	1 m/s	1 m/s	2 m/s	-
Max resolution	< 0.2 % FS	5 µm	1 µm (@ 0.15 m/s)	< 0.4 % FS
Linearity error **(2)**	< ±0.02% FS	< ± 0.02 % FS	< ± 0.001 % FS	< ±0.25% FS
Repeatability **(2)**	< ± 0.005% FS	< ± 0.005 % FS	< ± 0.001 % FS	< ±0.1% FS

(1) power supply provided by Atos axis card **(2)** percentage of total stroke **(3)** for Balluff BTL7 with SSI interface only special code SA433 is supported

18 MAIN SOFTWARE PARAMETER SETTINGS

For a detailed descriptions of the available settings, wirings and installation procedures, please refer to the user manuals included in the Z-SW-SETUP programming software:
Z-MAN-BM-LEZ - user manual for **Z-BM-LEZ** and **Z-BM-TEZ**

18.1 External reference and transducer parameters

Allow to configure the axis card reference and transducer inputs, analog or digital, to match the specific application requirements:
- *Scaling parameters* define the correspondence of these signals with the specific actuator stroke or force to be controlled
- *Limit parameters* define maximum/minimum stroke and force to detect possible alarm conditions
- *Homing parameters* define the startup procedure to initialize incremental transducer (e.g. Encoder)

18.2 PID control dynamics parameters

Allow to optimize and adapt the axis card closed loop to the wide range of hydraulic system characteristics:
- *PID parameters* each part of the closed loop algorithm (proportional, integral, derivative, feed forward, fine positioning, etc) can be modified to match the application requirements

18.3 Monitoring parameters

Allow to configure the axis card monitoring function of the positioning error (difference between actual reference and feedback) and detects anomalous conditions:
- *Monitoring parameters* maximum allowed errors can be set for both static and dynamic positioning phases, and dedicated waiting times can be set to delay the activation of the alarm condition and relevant reaction (see 18.4)

18.4 Fault parameters

Allow to configure how the axis card detect and react to alarm conditions:
- *Diagnostics parameters* define different conditions, threshold and delay time to detect alarm conditions
- *Reaction parameters* define different actions to be performed in case of alarm presence (stop at actual or preprogrammed position, emergency forward/backward, axis card disabling, etc.)

18.5 Valve characteristics compensation

Allow to modify the valve regulation to match the actuator/system characteristics and to obtain the best overall performances:
- *Valve parameters* modify the standard valve regulation by means of deadband compensation, curve linearization and differentiated gain for positive and negative regulation

18.6 Motion phases parameters

When the internal reference generation is active a pre-programmed cycle can be generated; start/stop/switch-over commands and reference generation types parameters can be set to design a customized sequence of motion phases adapted to the specific application requirements (see 4.2).

19 OVERALL DIMENSIONS [mm]

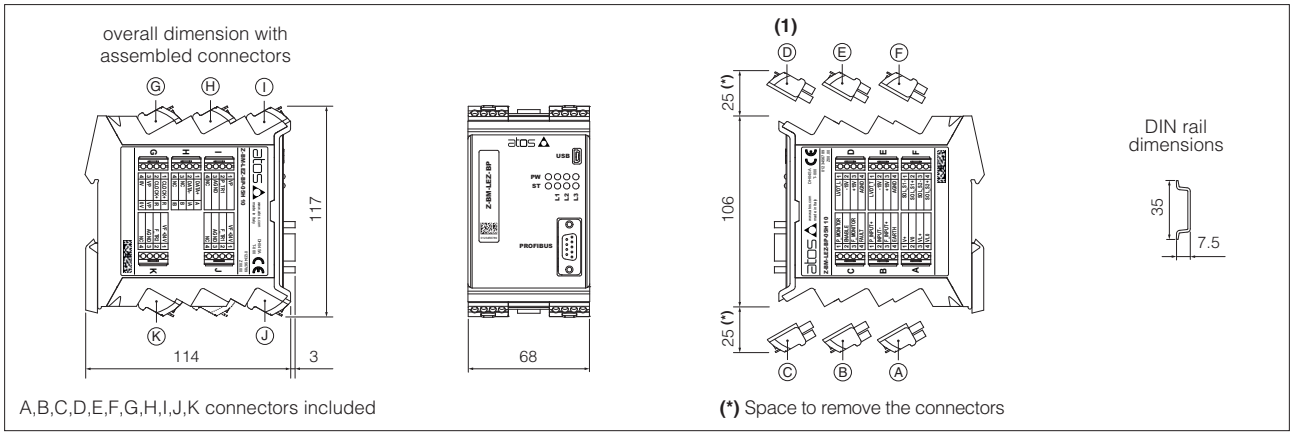

(1) D connector is available only for Z-BM-LEZ-**-01H

20 INSTALLATION

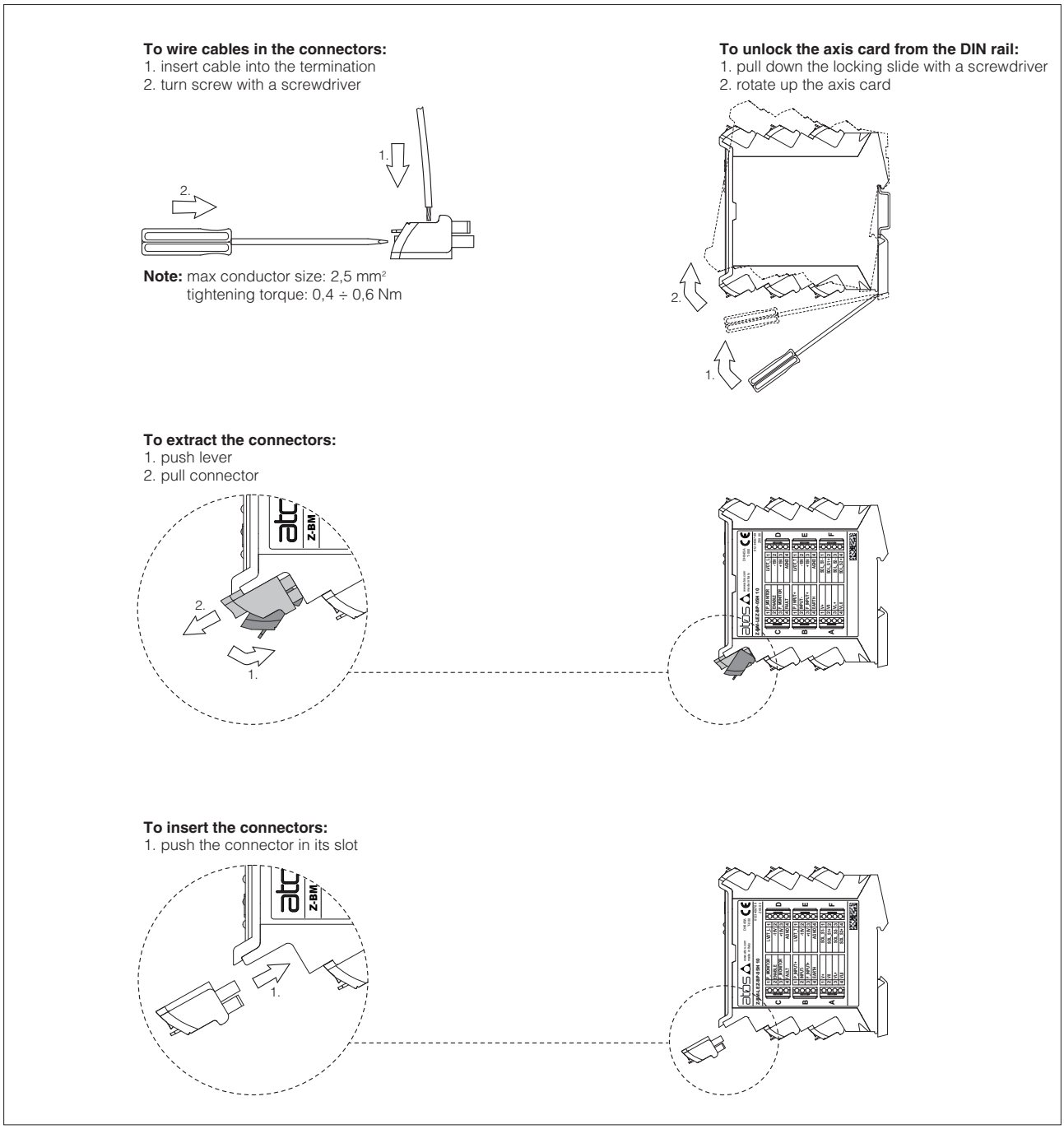

Note: all connectors are supplied with a mechanical coding. This feature ensures a unique insertion of each connector in the own slot.
(eg. connector A can not be inserted into connector slot of B,C,D,E,F,G,H,I,J,K)

21 WIRING EXAMPLES

21.1 Position control - analog reference - analog position transducer

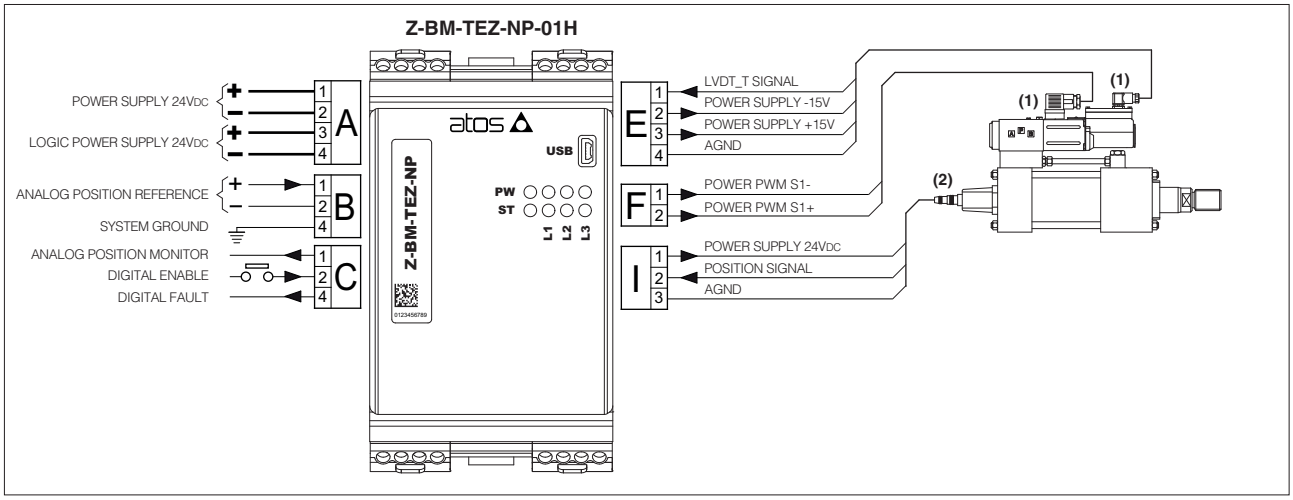

(1) For valve electrical connections please refer to the specific technical table
(2) The analog position transducer connections are intended as generic example, for details please consult the transducer datasheet

21.2 Alternated position/force control - CANopen reference - SSI position transducer - 2 analog pressure transducers

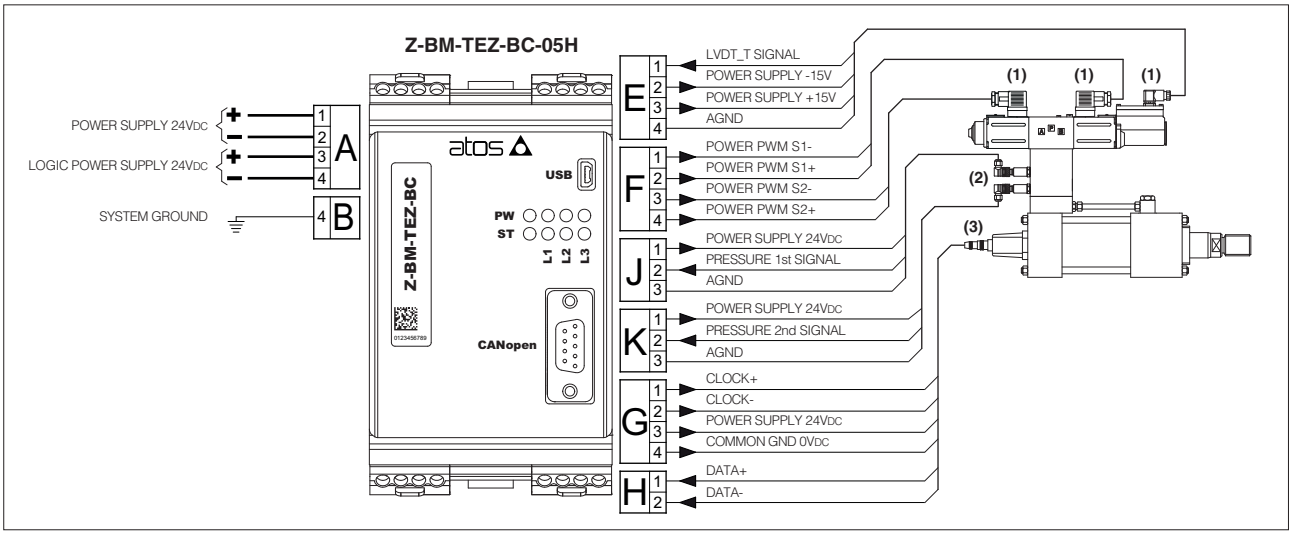

(1) For valve electrical connections please refer to the specific technical table
(2) Pressure transducers connections are shown with voltage signal output; for connections with current signal output see 14.5
(3) The SSI position transducer connections are intended as generic example, for details please consult the transducer datasheet

21.3 Alternated position/force control - EtherNet/IP reference - Encoder position transducer - analog load cell

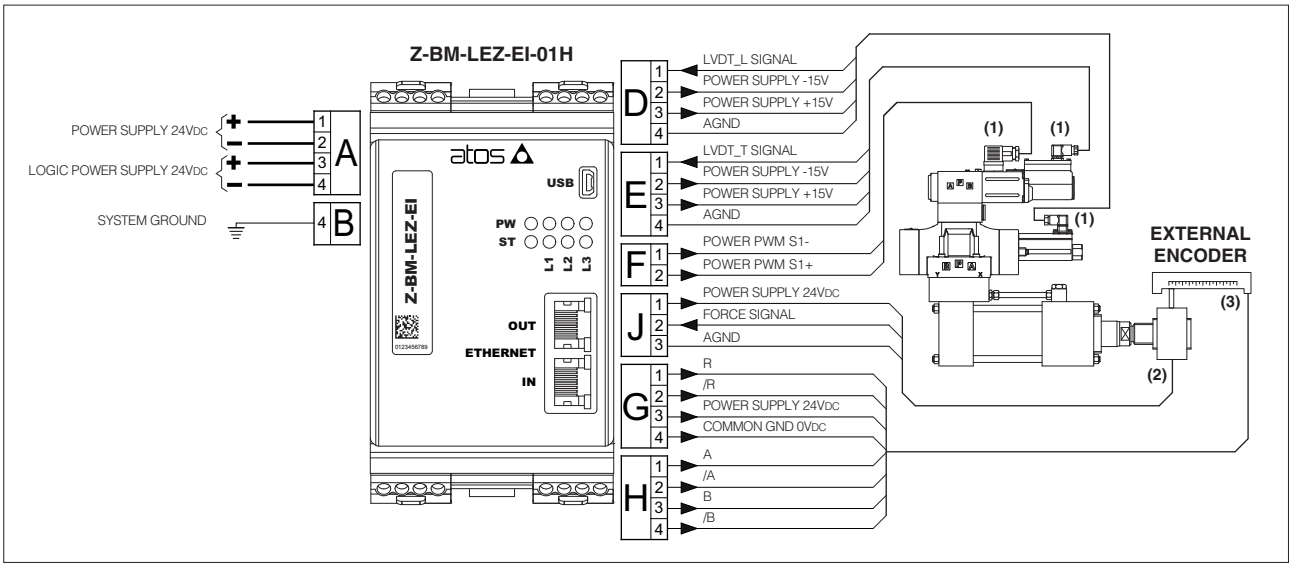

(1) For valve electrical connections please refer to the specific technical table
(2) Load cell connections is shown with voltage signal output; please consult the load cell datasheet for details about connections
(3) The Encoder position transducer connections are intended as generic example, for details please consult the transducer datasheet

Digital Z-BM-KZ axis cards

DIN-rail format, for position and force controls, autotuning

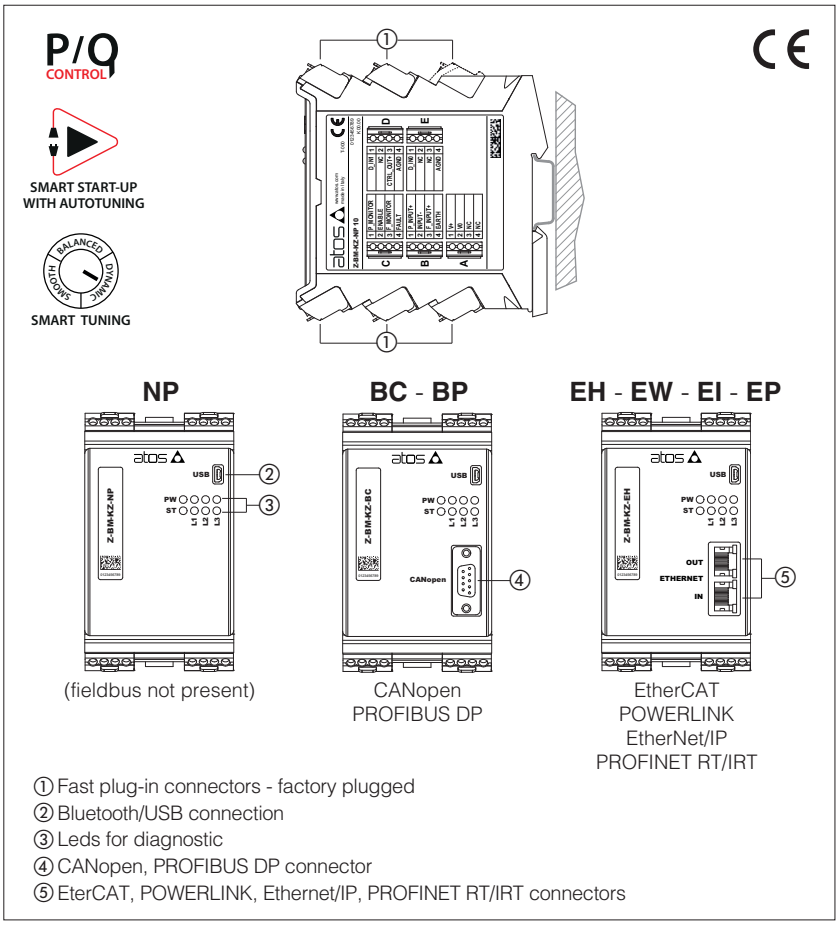

1 MODEL CODE

Z-BM	-	KZ	-	NP	*
Off-board electronic axis card in DIN rail format		Alternated position / force control module			Series number

Fieldbus interface:

NP = Not Present
BC = CANopen
BP = PROFIBUS DP
EH = EtherCAT
EW = POWERLINK
EI = EtherNet/IP
EP = PROFINET RT/IRT

Z-BM-KZ

Digital axis cards perform the position closed loop of linear or rotative hydraulic axes. The axis card generates a reference signal to the proportional valve which regulates the hydraulic flow to the actuator.

The controlled actuator has to be equipped with position transducer (analog, potentiometer, SSI or Encoder) to read the axis position feedback.

Alternated p/Q control may be set by software and add the force limitation to position regulation, requiring pressure or force transducers installation.

Smart Start-up procedure makes the commissioning quicker and easier, thanks to the Autotuning and Smart Tuning functionalities. Multiple PID sets allows to easily switch axis behaviour according to machine cycle.

General Features:

- 10 fast plug-in connectors
- Mini USB connector for Bluetooth/USB connection - always present
- DB9 connector for CANopen and PROFIBUS DP
- RJ45 connectors input/output for EtherCAT, POWERLINK, EtherNet/IP, PROFINET IO RT/IRT
- 8 leds for diagnostics (see 14.1)
- Electrical protection against reverse polarity of power supply
- Ambient temperature range: -20 ÷ +50 °C
- Plastic box with IP20 protection degree and standard DIN-rail mounting
- CE mark according to EMC directive

Software Features:

- Intuitive graphic interface
- Smart Start-up with autotuning
- Smart tuning
- Multiple sets
- Internal generation of motion cycle
- Complete diagnostics of axis status
- Internal oscilloscope function
- In field firmware update through USB

2 BLOCK DIAGRAM EXAMPLE

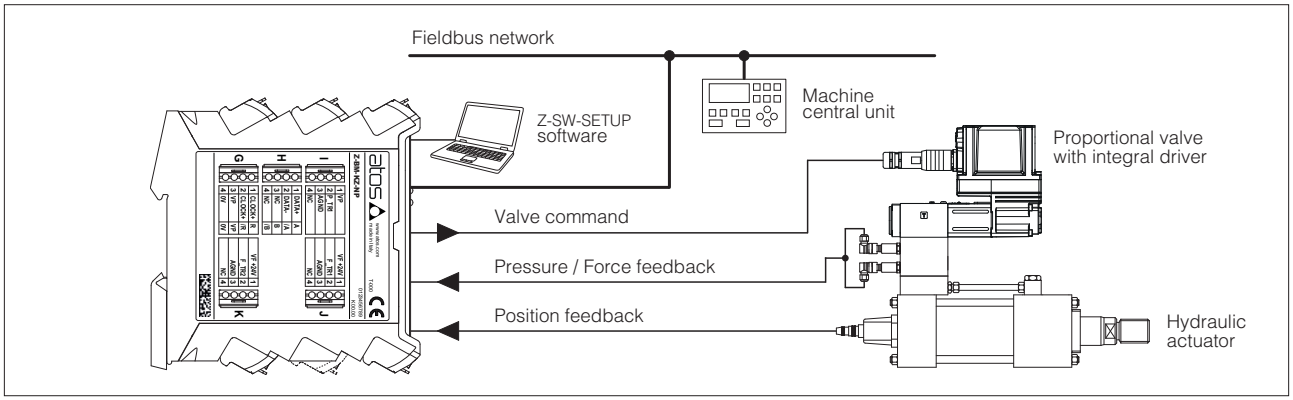

Note: block diagram example for alternated position/force control, with fieldbus interface

3 VALVES RANGE

Valves	Directional					
Industrial Tech table	**DHZO-TEB, DKZOR-TEB** FS168	**DHZO-TES, DKZOR-TES** FS168	**DLHZO-TEB, DLKZOR-TEB** FS180	**DLHZO-TES, DLKZOR-TES** FS180	**DPZO-LEB** FS178	**DPZO-LES** FS178
Ex-proof Tech table	-	**DHZA-TES, DKZA-TES** FX135	-	**DLHZA-TES, DLKZA-TES** FX150	-	**DPZA-LES** FX235

4 POSITION CONTROL

4.1 External reference signal

Axis card controls in closed loop the actuator position according to a position reference signal from the machine central unit.

Position profile can be managed in two ways (software selectable):

- Without trajectory generation **(a)**: the axis card receives from the machine central unit the position reference signal and follows it at any given instant
- With trajectory generation **(b)**: the axis card receives from the machine central unit just the final target position and internally generates a position profile limiting acceleration, velocity and deceleration

The position reference signal can be software selected between Analog reference **(c)** and Fieldbus reference **(d)**.

Refer to the axis card user manual for further details on position control features.

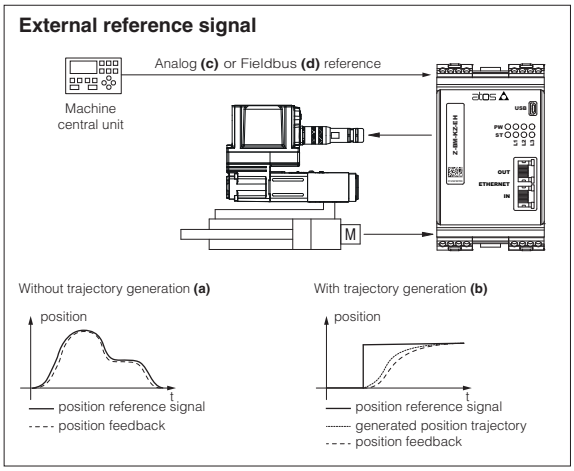

4.2 Automatic cycle

Axis card controls in closed loop the actuator position according to an internally generated automatic cycle: only start, stop and switch-over commands are required from the machine electronic central unit by means On-off commands **(e)** or Fieldbus commands **(f)**.

Atos PC software allows to realize an automatic cycle according to the application requirements. Refer to the axis card user manual for further details on automatic cycle features.

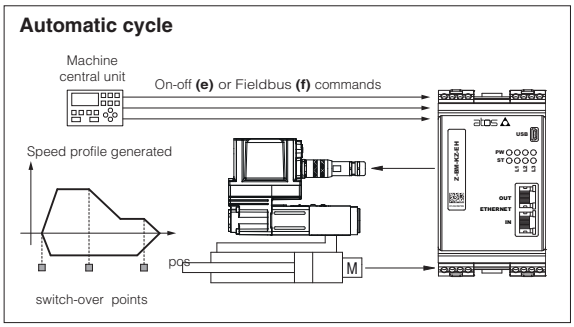

5 ALTERNATED POSITION / FORCE CONTROL

The alternated force closed loop control can be added to the actuator standard position control, requiring one or two remote transducers (pressure or force) that have to be installed on the actuator, see below functional schemes.

The position/force controls are operated according to two separate reference signals and a dedicated algorithm automatically selects which control is active time by time.

The dynamics of the switching between the two controls can be regulated thanks to specific software setting, in order to avoid instability and vibrations.

Position control is active (see phase ① and ③ at side) when the actuator force is lower than the relevant reference signal - the valve controls the actuator position by closed-loop regulation.

Force control is active (see phase ② and ④ at side) when the actuator actual force, measured by remote transducers, grows up to the relevant reference signal - the axis card reduces the valve's regulation in order to limit the actuator force; if the force tends to decrease under its reference signal, the position control returns active.

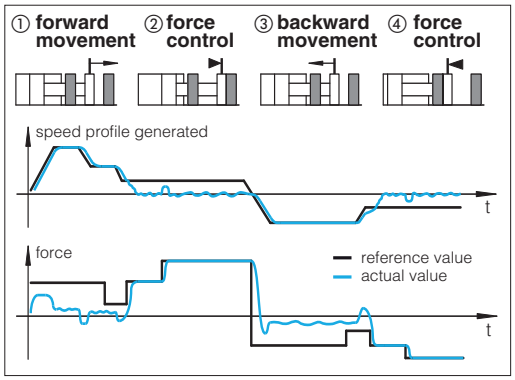

Alternated control configurations - software selectable

SF	SL
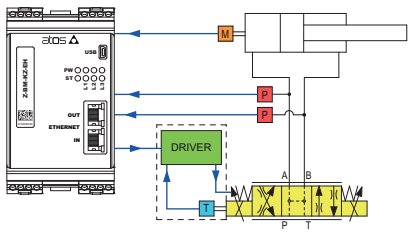	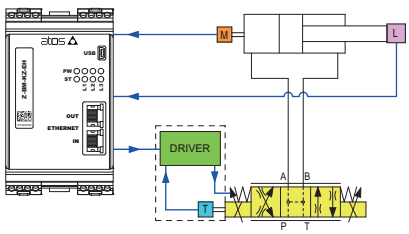
two remote pressure transducers have to be installed on the actuator's ports; the actuator force is calculated by the pressure feedbacks (Pa - Pb)	one load cell transducer has to be installed between the actuator and the controlled load

T valve's spool transducer	M actuator's position transducer	P pressure transducer	L load cell

SF – position/force control
Adds force control to standard position control and permits to limit the max force in two directions controlling in closed loop the delta pressure acting on both sides of the hydraulic actuator. Two pressure transducers have to be installed on both hydraulic line.

SL – position/force control
Adds force control to standard position control and permits to limit the max force in one or two directions controlling in closed loop the force performed by the hydraulic actuator. A load cell has to be installed on hydraulic actuator.

General Notes:

- servoproportional type DLHZO, DLKZOR and DPZO-L are strongly recommended for high accuracy applications see tech tables **F180**, **F175**
- auxiliary check valves are recommended in case of specific hydraulic configuration requirements in absence of power supply or fault, see tech table **EY105**
- for additional information about alternated p/Q controls configuration please refer to tech table **FS500**
- Atos technical service is available for additional evaluations related to specific applications usage

6 GENERAL NOTES

Atos digital proportionals valves are CE marked according to the applicable directives (e.g. Immunity and Emission EMC Directive).
Installation, wirings and start-up procedures must be performed according to the general prescriptions shown in tech table **FS900** and in the user manuals included in the Z-SW-SETUP programming software.

7 VALVE SETTINGS AND PROGRAMMING TOOLS - see tech. table GS500

Free downloadable software for PC allows to set all valve functional parameters and to access complete diagnostic information of digital axis controls via Bluetooth/USB service port.
Atos Z-SW-SETUP PC software supports all Atos digital axis controls and it is available at www.atos.com in MyAtos area.

⚠ **WARNING: axis card USB port is not isolated!** For E-C-SB-USB/BM cable, the use of E-A-SB-USB/OPT isolator adapter is highly recommended for PC protection

⚠ **WARNING:** for the list of countries where the Bluetooth adapter has been approved, see tech. table **GS500**

Bluetooth or USB connection

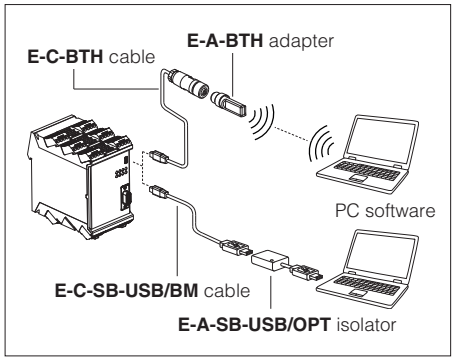

8 SMART START-UP

The automatic procedure supports the user during the commissioning phases of the axis control with guided procedures:

- **General setting**
It assists the user in system data setup, as like cylinder stroke, diameters, load mass, configure analog/digital signals and communication interface, position transducer setup.
- **System check**
It automatically executes position open loop movements to set axis control parameters, position transducer calibration and verify cylinder stroke.
- **Position autotuning**
It automatically determines the optimal PID parametrization of the position control adapting the dynamic response to guarantee control precision and axis stability. Once the procedure is started, the control performs few automatic position open loop movements of the actuator, during which control parameters are calculated and stored.

9 SMART TUNING

Once the Smart Start-up procedure has been completed, the Smart tuning feature allows to further refine the position control response by choosing from 3 different levels of performance in positioning:

- **dynamic** best dynamics and accuracy (default factory setting)
- **balanced** average dynamics and accuracy
- **smooth** attenuated dynamics and accuracy to improve control stability in critical applications or in environments with electrical disturbances

Settings can be changed any time via Z-SW-SETUP software or fieldbus.

If required, control performance can be further customized by modifying PID parameter via Z-SW-SETUP software.

1 = position reference signal
2 = generated position trajectory
3 = dynamic
4 = balanced
5 = smooth

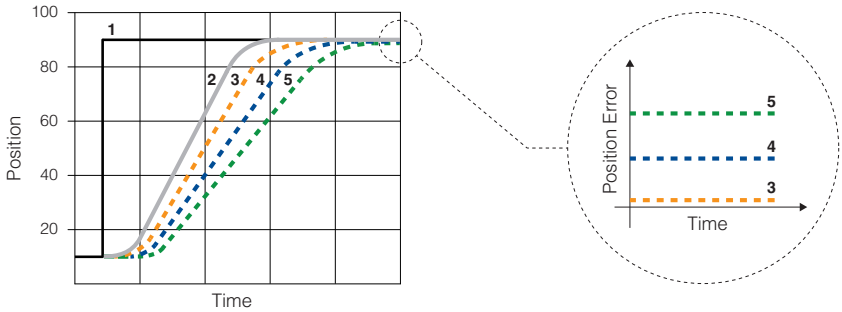

10 MULTIPLE SETS

Multiple PID sets allows to easily switch axis behaviour according to machine cycle, selecting between independent groups of parameters for:

- **position control PID**
- **force control PID and p/Q logics switching criteria**

Settings can be changed any time via Z-SW-SETUP software, fieldbus or digital input signals.

11 FIELDBUS - see tech. table GS510

Fieldbus allows valve direct communication with machine control unit for digital reference, valve diagnostics and settings. These execution allow to operate the valves through fieldbus or analog signals available on the main connector.

12 APPLICATION EXAMPLES

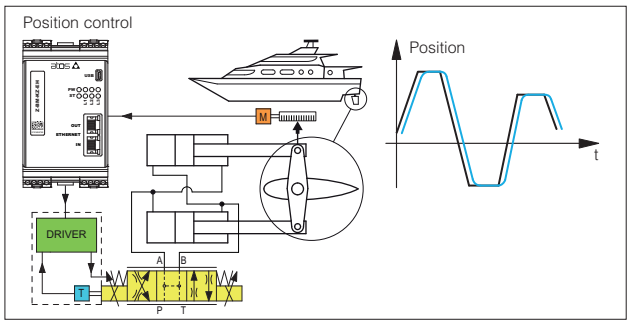

Hydraulic steering wheel in marine applications

Rudder axis card on motor yachts and sail boats requires smooth control for precise and reliable operations.

Z-BM-KZ axis cards perform the rudder position control system, ensuring accurate and repetitive regulations for a comfortable ride, thanks to:

- analog position reference mode for real time controls
- analog position transducer for simple and compact solution
- position PID control parameters to optimize the system response
- complete diagnostic information for advanced system monitoring

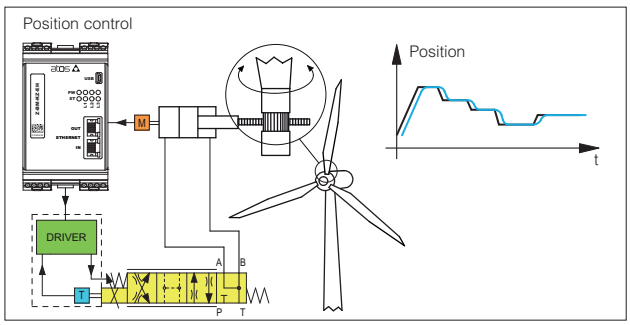

Wind turbines

The pitch control of the rotor blades is required to maximize the energy production. Accurate positioning, decentralized intelligence as well as long service life and reliability are required.

Z-BM-KZ axis cards perform high quality regulation of the blade pitch simplifying the system architecture, thanks to:

- SSI digital position transducer for high precision control
- complete remote system management with fieldbus interface
- position PID selection to adapt the position control to the different wind conditions

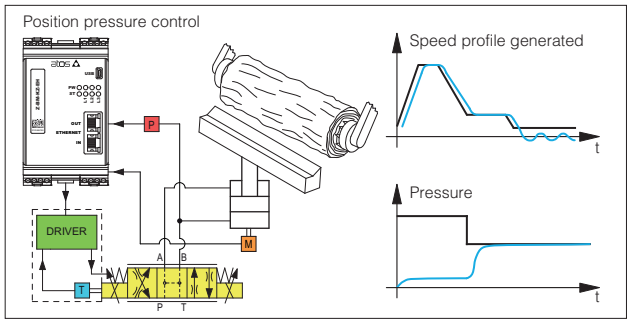

Wood machinery

Hydraulic wood machines require configurable and repetitive motion profiles, accurate position controls, and digital signals for synchronization purpose.

Z-BM-KZ axis cards allow remote control, thanks to:

- internal reference generation with maximum speed and acceleration settings
- analog position transducer for simple and reliable solution
- pressure transducer for alternated pressure control
- fieldbus connection for remote parameterization, commands, and axis card state indication

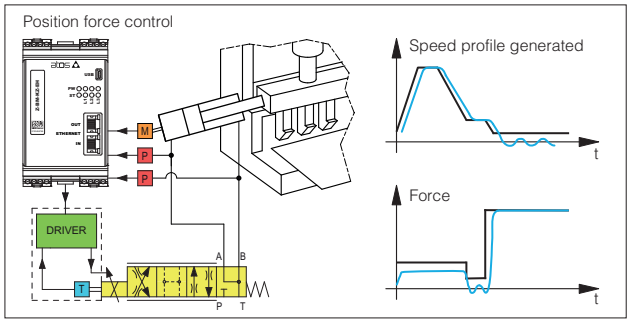

Bending Machines

Machine tools for cold-forming flat sheets require complete, automatic, programmable and flexible machine control to produce sheet metal panels from punched blank.

Z-BM-KZ axis cards combine high level position regulation with accurate force control to provide in a single device a complete and dedicated solution, thanks to:

- internal reference generation to simplify the machine control cycle
- digital position sensor for high resolution measurement system
- two pressure transducers for alternated force control
- fieldbus interface for easy machine control integration
- auxiliary digital outputs for system status indication (target reached, force control active)

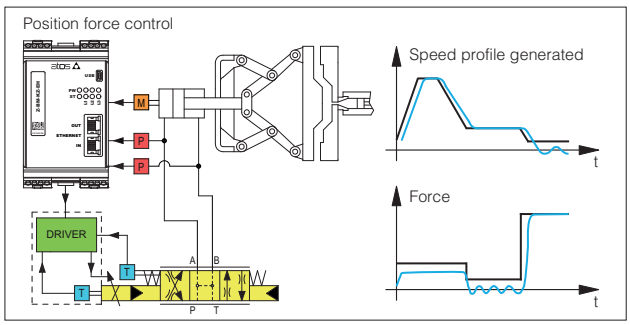

Die-casting machinery

Clamp movements in die-casting phases involve fast/slow motion cycle with accurate and repetitive alternated position/force controls for the mould safety functions.

Z-BM-KZ axis cards, with alternated position/force control, simplify the hydraulic + electronic system architecture, thanks to:

- internal reference generation for repetitive working cycles
- SSI digital position transducer for accurate axis control
- two pressure transducers for alternated force control
- auxiliary digital inputs/output to synchronize the machine functions
- fieldbus connection for machine remote control and advanced diagnostics

13 MAIN CHARACTERISTICS

Power supply	Nominal : +24 VDC Rectified and filtered : VRMS = 20 ÷ 32 VMAX (ripple max 10 % VPP)			
Max power consumption	10 W			
Analog input signals	Voltage: range ±10 VDC (24 VMAX tollerant) Input impedance: Ri > 50 kΩ Current: range ±20 mA Input impedance: Ri = 500 Ω			
Monitor outputs Control output	Output range: voltage ±10 VDC @ max 5 mA current ±20 mA @ max 500 Ω load resistance			
Enable and digital inputs	Range: 0 ÷ 5 VDC (OFF state), 9 ÷ 24 VDC (ON state), 5 ÷ 9 VDC (not accepted); Input impedance: Ri > 10 kΩ			
Fault output	Output range: 0 ÷ 24 VDC (ON state > [power supply - 2 V] ; OFF state < 1 V) @ max 50 mA; external negative voltage not allowed (e.g. due to inductive loads)			
Alarms	Cable break with current reference signal, over/under temperature, position control monitoring			
Position transducers power supply	+24 VDC @ max 100 mA or +5 VDC@ max 100 mA are software selectable			
Pressure/Force transducers power supply	+24 VDC @ max 100 mA			
Format	Plastic box ; IP20 protection degree ; L 35 - H 7,5 mm DIN-rail mounting as per EN60715			
Ambient temperature range	-20 ÷ +50 °C (storage -25 ÷ +85 °C)			
Mass	Approx. 450 g			
Additional characteristics	8 leds for diagnostic; protection against reverse polarity of power supply			
Compliance	CE according to EMC directive 2014/30/EU (Immunity: EN 61000-6-2; Emission: EN 61000-6-3) RoHS Directive 2011/65/EU as last update by 2015/863/EU REACH Regulation (EC) n°1907/2006			
Communication interface	USB Atos ASCII coding	CANopen EN50325-4 + DS408	PROFIBUS DP EN50170-2/IEC61158	EtherCAT, POWERLINK, EtherNet/IP, PROFINET IO RT / IRT EC 61158
Communication physical layer	not insulated USB 2.0 + USB OTG	optical insulated CAN ISO11898	optical insulated RS485	Fast Ethernet, insulated 100 Base TX
Recommended wiring cable	LiYCY shielded cables: 0,5 mm² max 50 m for logic - 1,5 mm² max 50 m for power supply Note: for transducers wiring cable please consult the transducers datasheet			
Max conductor size (see section 19)	2,5 mm²			

14 CONNECTIONS AND LEDS

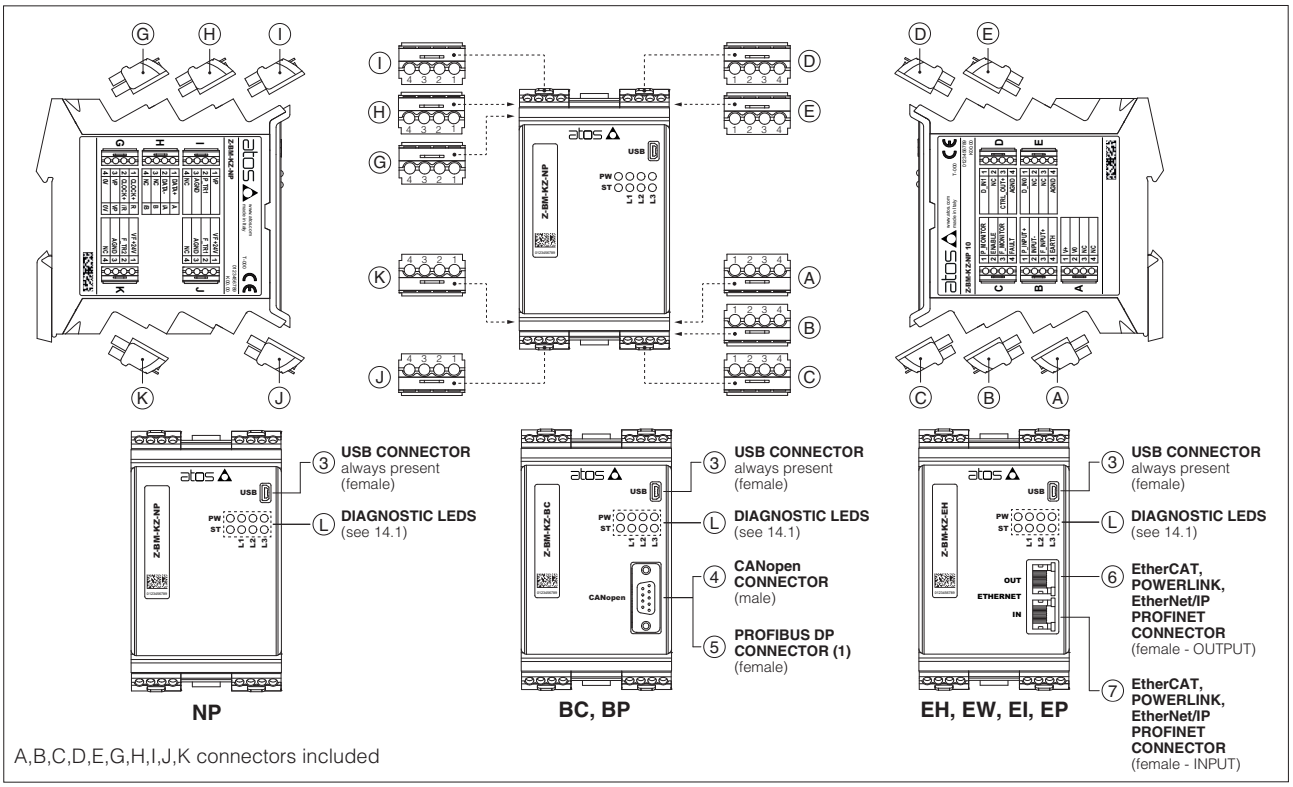

(1) To interface with Siemens 6ES7972-0BA12-0XA connector, it is mandatory to use also one of the following adapters to avoid interference with the USB connector: DG909MF1 - the connector will be oriented upwards; DG909MF3 - the connector will be oriented downwards

14.1 Diagnostic LEDs (L)

Eight leds show axis card operative conditions for immediate basic diagnostics. Please refer to the axis card user manual for detailed information.

FIELDBUS / LEDS	NP Not Present	BC CANopen	BP PROFIBUS DP	EH EtherCAT	EW POWERLINK	EI EtherNet/IP	EP PROFINET
L1	VALVE STATUS			LINK/ACT			
L2	NETWORK STATUS			NETWORK STATUS			
L3	ALARM STATUS			LINK/ACT			
PW	OFF = Power supply OFF		ON = Power supply ON				
ST	OFF = Fault present		ON = No fault				

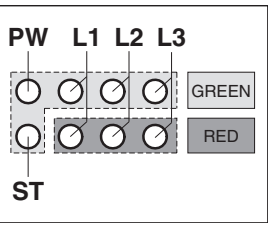

14.2 Connectors - 4 pin

CONNECTOR	PIN	SIGNAL	TECHNICAL SPECIFICATIONS	NOTES
A	A1	**NC**	Do not connect	
	A2	**NC**	Do not connect	
	A3	**V+**	Power supply 24 VDC	Input - power supply
	A4	**V0**	Power supply 0 VDC	Gnd - power supply
B	B1	**P_INPUT+**	Position reference input signal: ±10 VDC / ±20 mA maximum range; default is ±10 VDC	Input - analog signal **Software selectable**
	B2	**INPUT-**	Negative reference input signal for P_INPUT+ and F_INPUT+	Input - analog signal
	B3	**F_INPUT+**	Force reference input signal (SF, SL controls): ±10 VDC / ±20 mA maximum range; default is ±10 VDC	Input - analog signal **Software selectable**
	B4	**EARTH**	Connect to system ground	
C	C1	**P_MONITOR**	Position monitor output signal: ±10 VDC / ±20 mA maximum range, referred to AGND; default is ±10 VDC	Output - analog signal **Software selectable**
	C2	**ENABLE**	Enable (24 VDC) or disable (0 VDC) the axis card, referred to V0	Input - on/off signal
	C3	**F_MONITOR**	Force (SF, SL controls) or valve spool position (SN control) monitor output signal: ±10 VDC / ±20 mA maximum range, referred to AGND; default is ±10 VDC	Output - analog signal **Software selectable**
		NC	For EW, EI, EP executions the F_MONITOR is not available: do not connect	
	C4	**FAULT**	Fault (0 VDC) or normal working (24 VDC), referred to V0	Output - on/off signal
D	D1	**D_IN1**	Digital input 0 ÷ 24VDC, referred to AGND	Input - on/off signal
	D2	**NC**	Do not connect	
	D3	**CTRL_OUT+**	Control output signal for external valve driver, referred to AGND	Output - analog signal **Software selectable**
	D4	**AGND**	Common gnd for digital input and control output	Common gnd
E	E1	**D_IN0**	Digital input 0 ÷ 24VDC, referred to AGND	Input - on/off signal
	E2	**NC**	Do not connect	
	E3	**NC**	Do not connect	
	E4	**AGND**	Common gnd for digital input and monitor outputs	Common gnd
G	G1	Digital position transducer SSI or Encoder is software selectable: - SSI connections see 14.3 - Encoder connections see 14.4		
	G2			
	G3			
	G4			
H	H1	Digital position transducer SSI or Encoder is software selectable: - SSI connections see 14.3 - Encoder connections see 14.4		
	H2			
	H3			
	H4			
I	I1	**VP**	Power supply: +24VDC , +5VDC or OFF (default OFF)	Output - power supply **Software selectable**
	I2	**P_TR1**	Analog position transducer input signal ±10 VDC / ±20 mA maximum range; default is ±10 VDC	Input - analog signal **Software selectable**
	I3	**AGND**	Common gnd for transducer power supply and signals	Common gnd
	I4	**NC**	Do not connect	
J	J1	**VF +24V**	Power supply: +24VDC or OFF (default OFF)	Output - power supply **Software selectable**
	J2	**F_TR1**	1st signal pressure/force transducer: ±10 VDC / ±20 mA maximum range; default is ±10 VDC	Input - analog signal **Software selectable**
	J3	**AGND**	Common gnd for transducer power supply and signals	Common gnd
	J4	**NC**	Do not connect	
K	K1	**VF +24V**	Power supply: +24VDC or OFF (default OFF)	Output - power supply **Software selectable**
	K2	**F_TR2**	2nd signal pressure transducer (only for SF): ±10 VDC / ±20 mA maximum range; default is ±10 VDC	Input - analog signal **Software selectable**
	K3	**AGND**	Common gnd for transducer power supply and signals	Common gnd
	K4	**NC**	Do not connect	

14.3 SSI connectors signals - 4 pin

G	G1	**CLOCK+**	Serial synchronous clock (+)	Output - on/off signal
	G2	**CLOCK-**	Serial synchronous clock (-)	Output - on/off signal
	G3	**VP**	Power supply: +24VDC , +5VDC or OFF (default OFF)	Output - power supply **Software selectable**
	G4	**0V**	Common gnd for transducer power supply and signals	Common gnd

H	H1	**DATA+**	Serial position data (+)	Input - on/off signal
	H2	**DATA-**	Serial position data (-)	Input - on/off signal
	H3	**NC**	Do not connect	
	H4	**NC**	Do not connect	

Note: for Balluff BTL7 with SSI interface only special code SA433 is supported

SSI connection - example

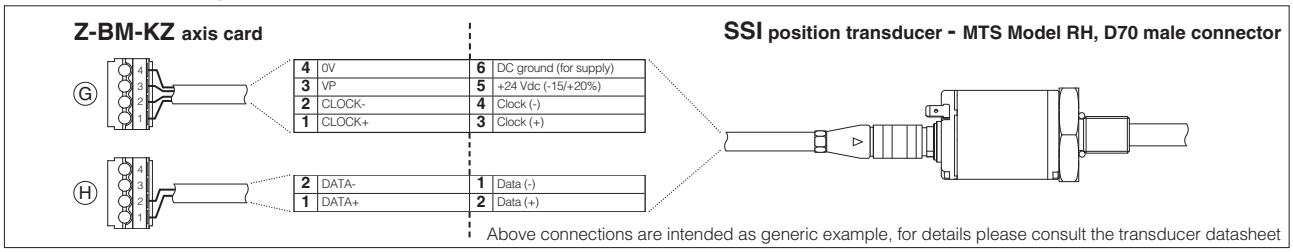

14.4 Encoder connectors signals - 4 pin

G	G1	**R**	Input channel R	Input - on/off signal
	G2	**/R**	Input channel /R	Input - on/off signal
	G3	**VP**	Power supply: +24VDC , +5VDC or OFF (default OFF)	Output - power supply **Software selectable**
	G4	**0V**	Common gnd for transducer power and signals	Common gnd

H	H1	**A**	Input channel A	Input - on/off signal
	H2	**/A**	Input channel /A	Input - on/off signal
	H3	**B**	Input channel B	Input - on/off signal
	H4	**/B**	Input channel /B	Input - on/off signal

Encoder connection - example

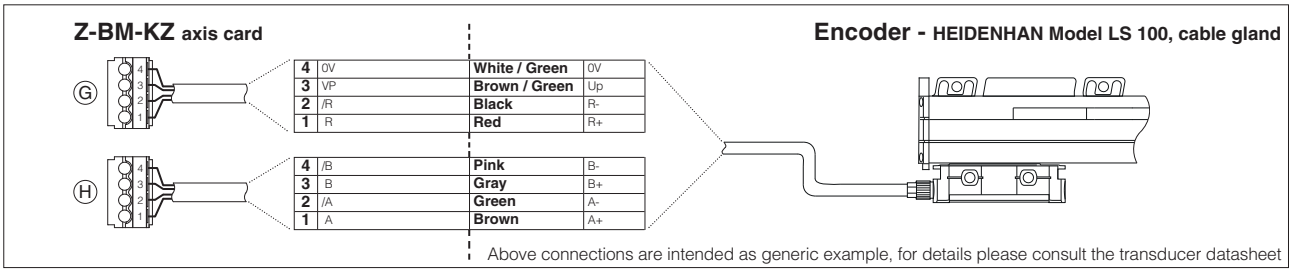

14.5 Pressure/force transducers connection - example

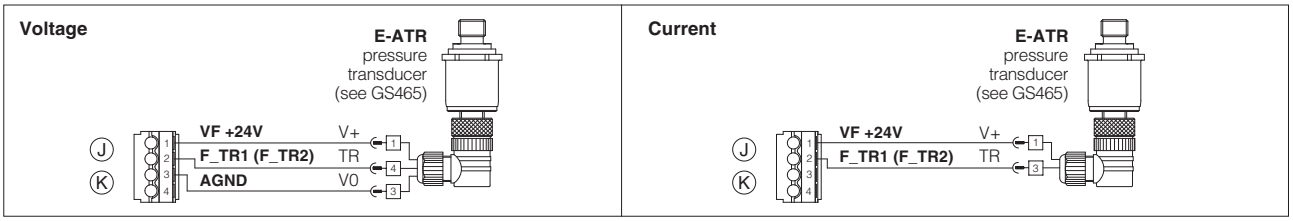

14.6 Communication connectors ③ - ④ - ⑤ - ⑥ - ⑦

③ **USB connector - Mini USB type B** always present		
PIN	**SIGNAL**	**TECHNICAL SPECIFICATION** (1)
1	**+5V_USB**	Power supply
2	**D-**	Data line -
3	**D+**	Data line +
4	**ID**	Identification
5	**GND_USB**	Signal zero data line

④ **BC fieldbus execution, connector - DB9 - 9 pin**		
PIN	**SIGNAL**	**TECHNICAL SPECIFICATION** (1)
2	**CAN_L**	Bus line (low)
3	**CAN_GND**	Signal zero data line
5	**CAN_SHLD**	Shield
7	**CAN_H**	Bus line (high)

⑤ **BP fieldbus execution, connector - DB9 - 9 pin**		
PIN	**SIGNAL**	**TECHNICAL SPECIFICATION** (1)
1	**SHIELD**	
3	**LINE-B**	Bus line (low)
5	**DGND**	Data line and termination signal zero
6	**+5V**	Termination supply signal
8	**LINE-A**	Bus line (high)

⑥ ⑦ **EH, EW, EI, EP fieldbus execution, connector - RJ45 - 8 pin**		
PIN	**SIGNAL**	**TECHNICAL SPECIFICATION** (1)
1	**TX+**	Transmitter - white/orange
2	**RX+**	Receiver - white/green
3	**TX-**	Transmitter - orange
6	**RX-**	Receiver - green

(1) Shield connection on connector's housing is recommended

15 POWER SUPPLY AND SIGNALS SPECIFICATIONS

Generic electrical output signals of the valve (e.g. fault or monitor signals) must not be directly used to activate safety functions, like to switch-ON/OFF the machine's safety components, as prescribed by the European standards (Safety requirements of fluid technology systems and components-hydraulics, ISO 4413).

15.1 Power supply (V+ and V0)

The power supply must be appropriately stabilized or rectified and filtered: apply at least a 10000 µF/40 V capacitance to single phase rectifiers or a 4700 µF/40 V capacitance to three phase rectifiers.

⚠ A safety fuse is required in series to each power supply: 500 mA fast fuse.

15.2 Position reference input signal (P_INPUT+)

Functionality of P_INPUT+ signal (pin B1), depends on axis card reference mode, see section 4 :

external analog reference (see 4.1): input is used as reference for control in closed loop the actuator position.
Input signal can be reconfigured via software selecting between voltage and current, within a maximum range of ±10 VDC or ± 20 mA; default is ±10 VDC

external fieldbus reference (see 4.1) *or automatic cycle* (see 4.2)*:* analog reference input signal can be used as on-off commands with input range 0 ÷ 24 VDC.

15.3 Force reference input signal (F_INPUT+)

Functionality of F_INPUT+ signal (pin B3), depends on selected axis card reference mode and alternated control options, see section 5 :
SL, SF controls and external analog reference selected : input is used as reference for the axis card pressure/force closed loop.
Input signal can be reconfigured via software selecting between voltage and current, within a maximum range of ±10 VDC or ± 20 mA; default is ±10 VDC

SN control or fieldbus reference selected: analog reference input signal can be used as on-off commands with input range 0 ÷ 24 VDC

15.4 Position monitor output signal (P_MONITOR)

The axis card generates an analog output signal (pin C1) proportional to the actual axis position; the monitor output signal can be software set to show other signals available in the axis card (e.g. analog reference, fieldbus reference, position error, valve spool position).
The output range and polarity are software selectable within the maximum range ±10 VDC or ±20 mA; default is ±10 VDC

15.5 Force monitor output signal (F_MONITOR)

The axis card generates an analog output signal (pin C3) according to alternated force control option:
SN control: output signal is proportional to the actual valve spool position
SL, SF controls: output signal is proportional to the actual pressure/forcel applied to the cylinder's rod end
Monitor output signals can be software set to show other signals available in the axis card (e.g. analog reference, force reference).
The output range and polarity are software selectable within the maximum range ±10 VDC or ±20 mA; default is ±10 VDC

15.6 Enable Input Signal (ENABLE)

To enable the axis card, a 24 VDC voltage has to be applied on pin C2.
When the Enable signal is set to zero the axis card can be software set to perform one of the following actions:
- maintain the actuator actual position in close loop control
- move towards a predefined position in closed loop control and maintains the reached position (hold position)
- move forward or backward in open loop (only the valve's closed loop remain active)

15.7 Fault output signal (FAULT)

Fault output signal (pin C4) indicates fault conditions of the axis card (solenoid short circuits/not connected, reference or transducer signal cable broken, maximum error exceeded, etc.). Fault presence corresponds to 0 VDC, normal working corresponds to 24 VDC
Fault status is not affected by the status of the Enable input signal.
Fault output signal can be used as digital output by software selection.

15.8 Position transducer input signals

A position transducer must be always directly connected to the axis card. Position digital input signals are factory preset to binary SSI, they can be reconfigured via software selecting between binary/gray SSI, Encoder or generic transducer with analog interface.
Input signals can be reconfigured via software selecting between voltage and current, within a maximum range of ±10 VDC or ± 20 mA; default is ±10 VDC
Refer to position transducer characteristics to select the transducer type according to specific application requirements, see section 16 .

15.9 Remote pressure/force transducer input signals (F_TR1 and F_TR2) -SF, SL controls

Analog remote pressure transducers or load cell can be directly connected to the axis card.
Input signal can be reconfigured via software selecting between voltage and current, within a maximum range of ±10 VDC or ± 20 mA; default is ±10 VDC
Refer to pressure/force transducer characteristics to select the transducer type according to specific application requirements, see section 16 .

15.10 Control output signal (CTRL_OUT+)

The error signal processed by the control algorithms generates the control output signal (pin D3) for the external driver of the proportional valve which operates the hydraulic flow to the actuator.
The output range and polarity are software selectable within ±10 VDC (for voltage) or ± 20 mA (for current) maximum range referred to the analog ground AGND on pin D4; default setting is ±10 VDC

15.11 Digital input signals (D_IN0 and D_IN1)

Two on-off input signals are available on the pin E1 and D1. For each input by the Z-SW-SETUP software, it is possible to set the polarity and to match a proper condition within the following:

- pressure/force PID selection (default)
- start/stop/switch-over command in case of internal reference generation (see 4.2)
- specific operative command for hydraulic axis mode (referencing mode, jog mode, automatic mode)
- jog command
- disable force alternated control

	PID SET SELECTION			
PIN	SET 1	SET 2	SET 3	SET 4
E1	0	24 VDC	0	24 VDC
D1	0	0	24 VDC	24 VDC

16 ACTUATOR'S TRANSDUCER CHARACTERISTICS

16.1 Position transducers

The accuracy of the position control is strongly dependent to the selected position transducer. Four different transducer interfaces are available on the axis card, depending to the system requirements: analog signal (analog), SSI or Encoder (digital).
Transducers with digital interface allow high resolution and accurate measures, that combined with fieldbus communication grants highest performances. Transducers with analog interface grant simple and cost effective solutions.

16.2 Pressure/force transducers

The accuracy of the pressure/force control is strongly dependent to the selected pressure/force transducer (see section 5).
Alternated force controls require to install pressure transducers or load cell to measure the actual pressure/force values.
Pressure transducers allow easy system integration and cost effective solution for alternated position/force controls (see tech table **GS465** for pressure transducers details). Load cell transducers allow the user to get high accuracy and precise regulations for alternated position/force control.
The characteristics of the remote pressure/force transducers must be always selected to match the application requirements and to obtain the best performances: transducer nominal range should be at least 115%÷120% of the maximum regulated pressure/force.

16.3 Transducers characteristics & interfaces - following values are just for reference, for details please consult the transducer's datasheet

	Position			**Pressure/Force**
Input type	Analog	SSI **(3)**	Incremental Encoder	Analog
Power supply **(1)**	+24 VDC	+24 VDC	+5 VDC or +24 VDC	+24 VDC
Axis card interface	0 ÷ 10V or 4 ÷ 20 mA	Serial SSI binary/gray	TTL 5Vpp - 150 KHz	±10 VDC or 4 ÷ 20 mA
Max speed	1 m/s	1 m/s	2 m/s	-
Max resolution	< 0.2 % FS	5 µm	1 µm (@ 0.15 m/s)	< 0.4 % FS
Linearity error **(2)**	< ±0.02% FS	< ± 0.02 % FS	< ± 0.001 % FS	< ±0.25% FS
Repeatability **(2)**	< ± 0.005% FS	< ± 0.005 % FS	< ± 0.001 % FS	< ±0.1% FS

(1) power supply provided by Atos axis card **(2)** percentage of total stroke **(3)** for Balluff BTL7 with SSI interface only special code SA433 is supported

17 MAIN SOFTWARE PARAMETER SETTINGS

For a detailed descriptions of the available settings, wirings and installation procedures, please refer to the user manuals included in the Z-SW-SETUP programming software:
Z-MAN-BM-KZ - user manual for **Z-BM-KZ**

17.1 External reference and transducer parameters

Allow to configure the axis card reference and transducer inputs, analog or digital, to match the specific application requirements:
- *Scaling parameters* define the correspondence of these signals with the specific actuator stroke or force to be controlled
- *Limit parameters* define maximum/minimum stroke and force to detect possible alarm conditions
- *Homing parameters* define the startup procedure to initialize incremental transducer (e.g. Encoder)

17.2 PID control dynamics parameters

Allow to optimize and adapt the axis card closed loop to the wide range of hydraulic system characteristics:
- *PID parameters* each part of the closed loop algorithm (proportional, integral, derivative, feed forward, fine positioning, etc) can be modified to match the application requirements

17.3 Monitoring parameters

Allow to configure the axis card monitoring function of the positioning error (difference between actual reference and feedback) and detects anomalous conditions:
- *Monitoring parameters* maximum allowed errors can be set for both static and dynamic positioning phases, and dedicated waiting times can be set to delay the activation of the alarm condition and relevant reaction (see 17.4)

17.4 Fault parameters

Allow to configure how the axis card detect and react to alarm conditions:
- *Diagnostics parameters* define different conditions, threshold and delay time to detect alarm conditions
- *Reaction parameters* define different actions to be performed in case of alarm presence (stop at actual or preprogrammed position, emergency forward/backward, axis card disabling, etc.)

17.5 Valve characteristics compensation

Allow to modify the valve regulation to match the actuator/system characteristics and to obtain the best overall performances:
- *Valve parameters* modify the standard valve regulation by means of deadband compensation, curve linearization and differentiated gain for positive and negative regulation

17.6 Motion phases parameters

When the internal reference generation is active a pre-programmed cycle can be generated; start/stop/switch-over commands and reference generation types parameters can be set to design a customized sequence of motion phases adapted to the specific application requirements (see 4.2).

18 OVERALL DIMENSIONS [mm]

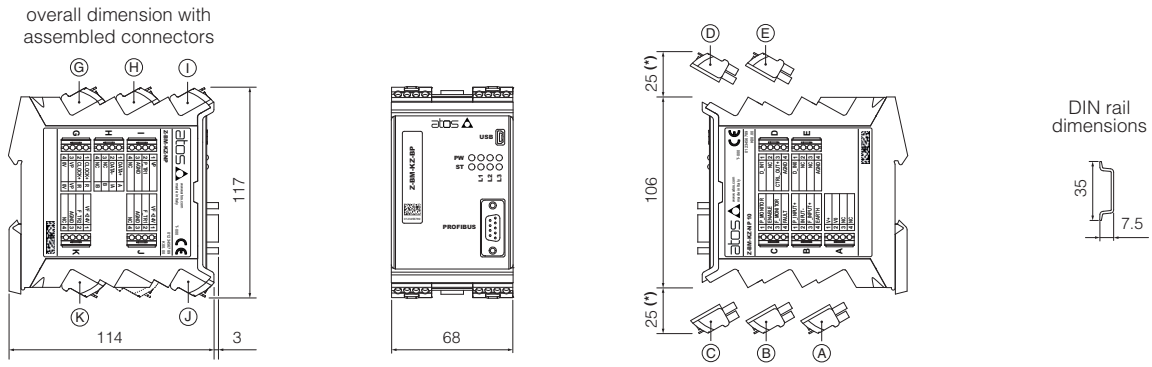

A,B,C,D,E,G,H,I,J,K connectors included

(*) Space to remove the connectors

19 INSTALLATION

To wire cables in the connectors:
1. insert cable into the termination
2. turn screw with a screwdriver

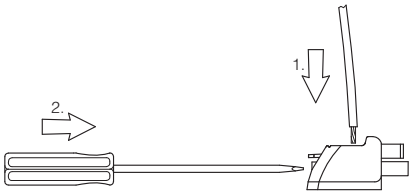

Note: max conductor size: 2,5 mm²
tightening torque: 0,4 ÷ 0,6 Nm

To unlock the axis card from the DIN rail:
1. pull down the locking slide with a screwdriver
2. rotate up the axis card

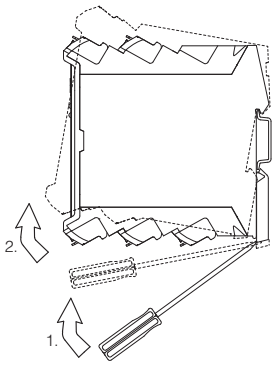

To extract the connectors:
1. push lever
2. pull connector

To insert the connectors:
1. push the connector in its slot

Note: all connectors are supplied with a mechanical coding. This feature ensures a unique insertion of each connector in the own slot (eg. connector A can not be inserted into connector slot of B,C,D,E,G,H,I,J,K)

20 WIRING EXAMPLES

20.1 Position control - analog reference - analog position transducer

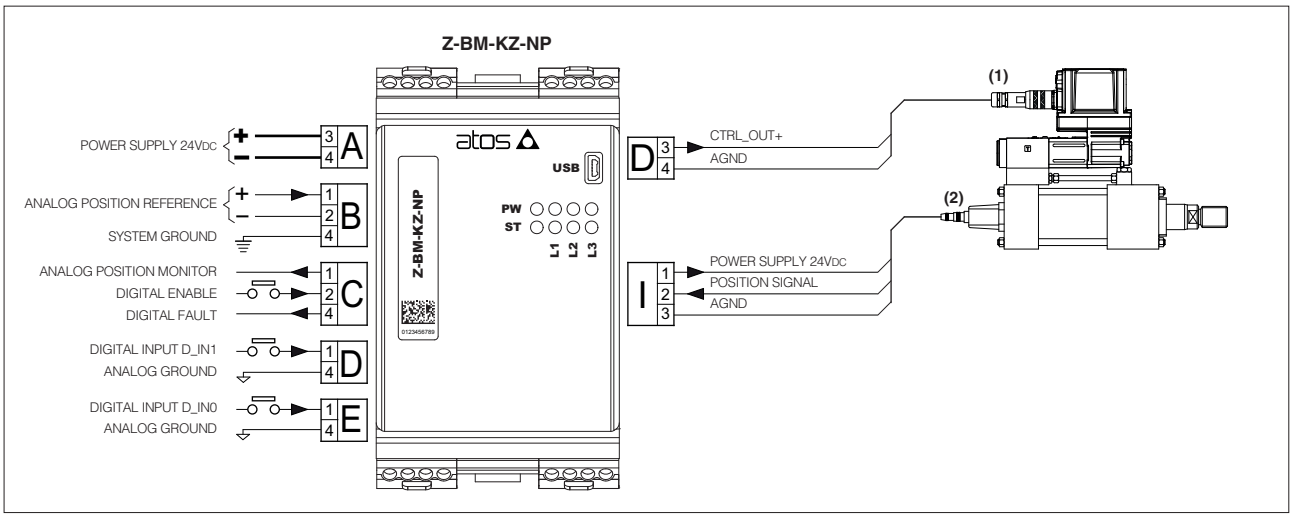

(1) For valve driver electrical connections please refer to the specific technical table
(2) The analog position transducer connections are intended as generic example, for details please consult the transducer datasheet

20.2 Alternated position/force control - CANopen reference - SSI position transducer - 2 analog pressure transducers

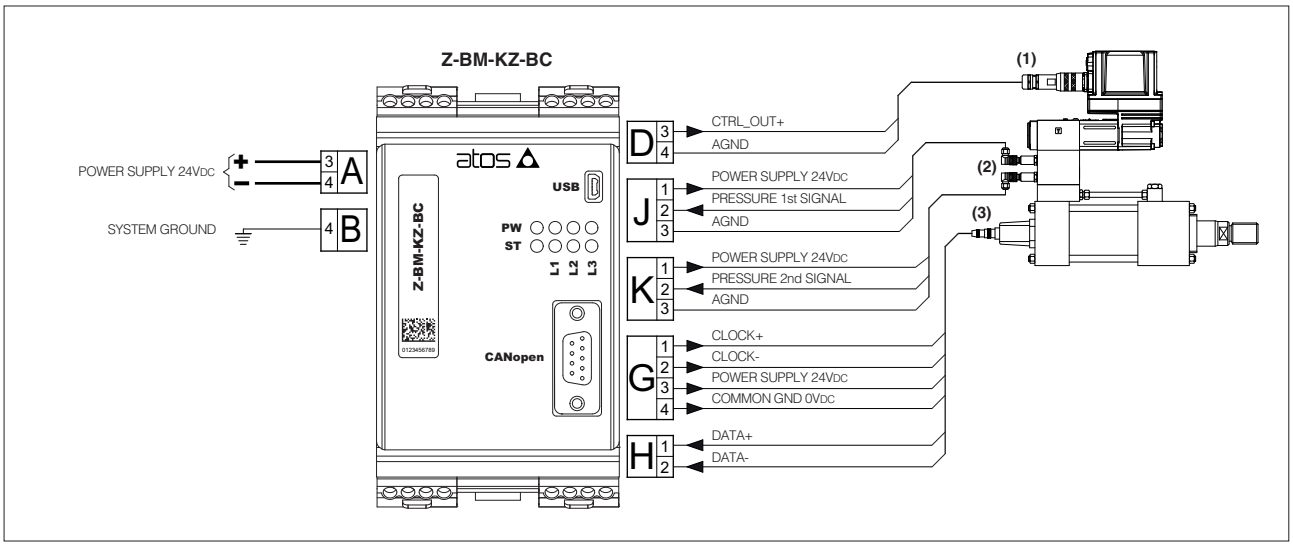

(1) For valve driver electrical connections please refer to the specific technical table
(2) Pressure transducers connections are shown with voltage signal output; for connections with current signal output see 14.5
(3) The SSI position transducer connections are intended as generic example, for details please consult the transducer datasheet

20.3 Alternated position/force control - EtherNet/IP reference - Encoder position transducer - analog load cell

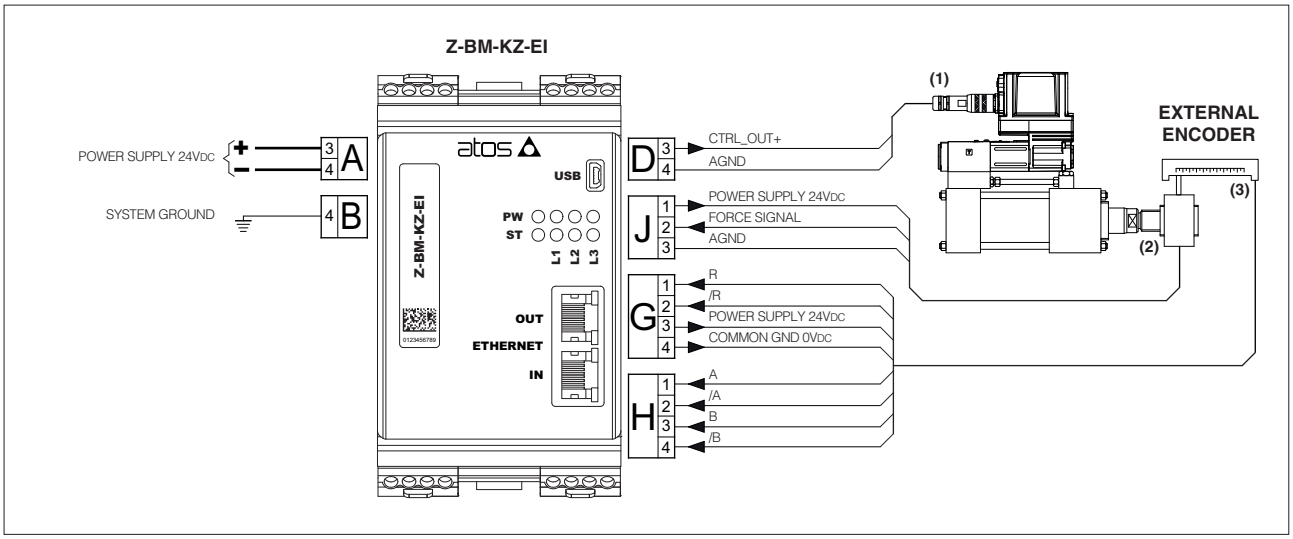

(1) For valve driver electrical connections please refer to the specific technical table
(2) Load cell connections is shown with voltage signal output; please consult the load cell datasheet for details about connections
(3) The Encoder position transducer connections are intended as generic example, for details please consult the transducer datasheet

Digital electrohydraulic servoactuators

servocylinder plus servoproportional directional with on-board driver & axis card

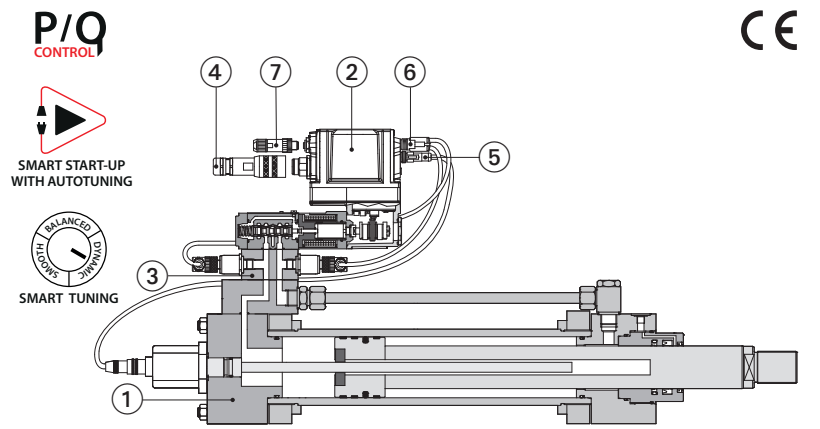

***** AZC-D-SF-EH/CKM200/100D0500/V040**

① Servocylinder with on-board LVDT transducer
② Servoroportional valve with on-board digital driver + axis card
③ Block with double pressure transducer
④ Main connector
⑤ LVDT transducer connector
⑥ Pressure transducers connector
⑦ Fieldbus connectors

AZC

Digital electrohydraulic servoactuators are stand-alone units performing closed loop position controls.
The complete motion control cycle can be operated by external signals (from machine PLC) or programmed internally to the controller.
Alternated p/Q control add the force limitation to position regulation, requiring pressure or force transducers installation.
The servoacuators are made by a servocylinder with position transducer, servoproportional valve with on-board driver plus axis card, factory assembled and tested.
They can be provided with optional fieldbus interfaces for functional parameters setting, reference signals and real time diagnostics.
Smart Start-up procedure makes the commissioning quicker and easier, thanks to the Autotuning and Smart Tuning functionalities.
Multiple PID sets allows to easily switch axis behaviour according to machine cycle.

1 MODEL CODE

***	AZC	M	-	D	-	SF	-	EH	/	CK	M	200	/	100	D	0500	/	V0	40

Design number

Digital electrohydraulic servoactuator for linear axis position control

Cycle Generation type:
- **-** = none
- **I** = injection
- **M** = mold
- **P** = parison
- **S** = synchronism
- **X** = positioning
- **9** = customized

Position transducer type:
- **A** = Analog (standard, potentiometer)
- **D** = Digital (SSI, Encoder)

Alternated p/Q controls:
- **SN** = none
- **SF** = with 2 on-board pressure transducers
- **SL** = with 1 on-board load cell
- **XL** = with 1 remote load cell

Fieldbus interfaces, USB port always present:
- **NP** = Not present
- **BC** = CANopen
- **BP** = PROFIBUS DP
- **EH** = EtherCAT
- **EW** = POWERLINK
- **EI** = EtherNet/IP
- **EP** = PROFINET RT/IRT

Servocylinder Type, tech table **B310**:
- **CN** = ISO 6020-1, Pmax 250 bar - tech table **B180**
- **CK** = ISO 6020-2, Pmax 250 bar - tech table **B137**
- **CH** = ISO 6020-3, Pmax 250 bar - tech table **B160**
- **CC** = ISO 6022, Pmax 320bar - tech table **B241**

Bore diameter [mm]

Rod diameter [mm]

Rod:
- **S** = single rod
- **D** = double rod

Stroke [mm]

Servoproportional valve size with axis controller:
- **V0** = direct, size 06
- **V1** = direct or piloted, size 10
- **V2** = piloted size 16
- **V4** = piloted size 25 or size 27

Servoproportional valve configuration, zero spool overlap:
- **40** = with fail safe, sleeve execution, direct (tech table **FS610**)
- **60** = without fail safe, sleeve execution, direct (tech table **FS610**) or piloted (tech table **FS630**)
- **70** = spring central position, direct (tech table **FS620**) or piloted (tech table **FS630**)

Actuator position transducer type, see section 9 :

Analog (only for AZC-A)
- **P** = potentiometer, max stroke 700mm
- **F** = analog magnetosonic, max stroke 2500mm
- **N** = analog magnetostrictive, max stroke 3000mm
- **T** = LVDT, max stroke 16mm
- **L** = LVDT, max stroke 30mm
- **V** = inductive, max stroke 1000mm

Digital (only for AZC-D)
- **M** = SSI magnetosonic, max stroke 2500mm

Analog or Digital
- **9** = special
- **X** = remoted

2 MAIN CHARACTERISTICS

Assembly position		Any position	
Ambient temperature range		standard execution = -20°C ÷ +60°C	
Storage temperature range		Standard execution = -20°C ÷ +70°C	
Protection degree to EN60529		IP66 / IP67	
Duty factor		Continuous rating (ED=100%)	
Recommended fluid temperature		-20°C ÷ +60°C, with HFC hydraulic fluids = -20°C ÷ +50°C	
Recommended viscosity		20 ÷ 100 mm²/s - max allowed range 15 ÷ 380 mm²/s	
Max fluid contamination level	normal operation	ISO4406 class 18/16/13 NAS1638 class 7	see also filter section at www.atos.com or KTF catalog
	longer life	ISO4406 class 16/14/11 NAS1638 class 5	

Hydraulic fluid	Classification	Ref. Standard
Mineral oils	HL, HLP, HLPD, HVLP, HVLPD	DIN 51524
Flame resistant without water	HFDU, HFDR	ISO 12922
Flame resistant with water	HFC	

3 POSITION CONTROL

Digital servoproportionals direct or pilot operated include valve with on-board digital driver plus axis card to perform the position closed loop of hydraulic actuator. Axis controllers are operated by an external or internally generated reference position signal.
For detailed information about integral axis controller see tech tables **FS610**, **FS620**, **FS630**.

4 ALTERNATED POSITION / FORCE CONTROL

SF and **SL** controls add the alternated force closed loop control to the actuator standard position control.
A dedicated algorithm alternates pressure (force) depending on the actual hydraulic system conditions.
For detailed information about SF, SL controls, see tech table **FS500**.

SF	SL
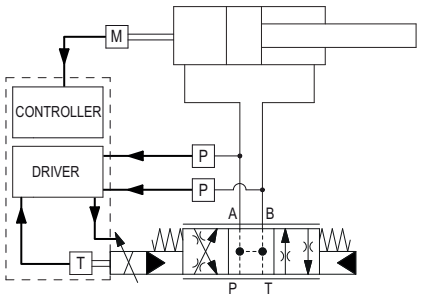	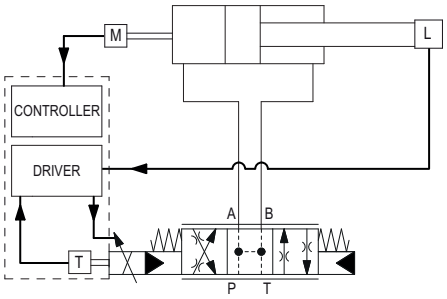

T valve spool transducer	M actuator position transducer	P pressure transducer	L load cell

5 SMART START-UP

The automatic procedure supports the user during the commissioning phases of the axis control with guided procedures:

- **General setting**

It assists the user in system data setup, as like cylinder stroke, diameters, load mass, configure analog/digital signals and communication interface, position transducer setup.

- **System check**

It automatically executes position open loop movements to set axis control parameters, position transducer calibration and verify cylinder stroke.

- **Position autotuning**

It automatically determines the optimal PID parametrization of the position control adapting the dynamic response to guarantee control precision and axis stability. Once the procedure is started, the control performs few automatic position open loop movements of the actuator, during which control parameters are calculated and stored.

6 SMART TUNING

Once the Smart Start-up procedure has been completed, the Smart tuning feature allows to further refine the position control response by choosing from 3 different levels of performance in positioning:

- **dynamic** best dynamics and accuracy (default factory setting)
- **balanced** average dynamics and accuracy
- **smooth** attenuated dynamics and accuracy to improve control stability in critical applications or in environments with electrical disturbances

Settings can be changed any time via Z-SW software or fieldbus.

If required, control performance can be further customized by modifying PID parameter via Z-SW software.

1 = position reference signal
2 = generated position trajectory
3 = dynamic
4 = balanced
5 = smooth

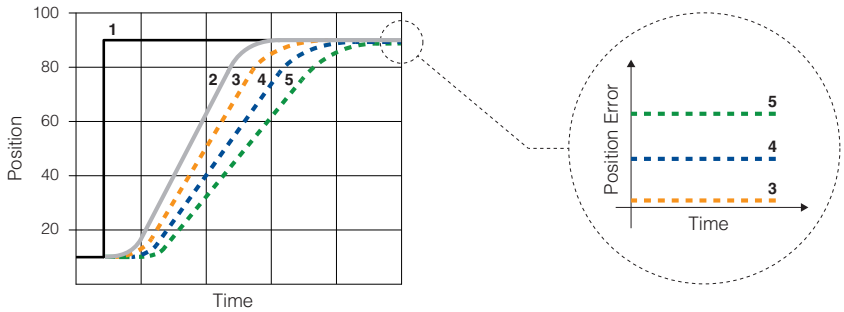

7 MULTIPLE SETS

Multiple PID sets allows to easily switch axis behaviour according to machine cycle, selecting between independent groups of parameters for:

- **position control PID**
- **force control PID and p/Q logics switching criteria**

Settings can be changed any time via Z-SW software, fieldbus or digital input signals.

8 FIELDBUS - see tech. table GS510

Fieldbus allows valve direct communication with machine control unit for digital reference, valve diagnostics and settings. These execution allow to operate the valves through fieldbus or analog signals available on the main connector.

9 ACTUATOR'S TRANSDUCER CHARACTERISTICS

9.1 Position transducers

The accuracy of the position control is strongly dependent to the selected position transducer. Four different transducer interfaces are available on the axis cards, depending to the system requirements: potentiometer or analog signal (A execution), SSI or Encoder (D execution).
Transducers with digital interface allow high resolution and accurate measures, that combined with fieldbus communication grants highest performances.
Transducers with analog interface grant simple and cost effective solutions.

9.2 Pressure/force transducers

The accuracy of the force control is strongly dependent to the selected pressure/force transducer.
Alternated force controls require to install pressure transducers or load cell to measure the actual pressure/force values.
Pressure transducers allow easy system integration and cost effective solution for alternated position/force controls (see tech table **GS465** for pressure transducers details).
Load cell transducers allow the user to get high accuracy and precise regulations for alternated position/force control.
The characteristics of the remote pressure/force transducers must be always selected to match the application requirements and to obtain the best performances: transducer nominal range should be at least 115%÷120% of the maximum regulated pressure/force.

9.3 Transducers characteristics & interfaces - following values are just for reference, for details please consult the transducer's datasheet

	Position				**Pressure/Force**
Execution	**A**		**D**		**SF, SL**
Input type	Potentiometer	Analog **(3)**	SSI **(4) (5)**	Incremental Encoder	Analog
Power supply **(1)**	10 ÷ 30 VDC	+24 VDC	+24 VDC	+5 VDC / +24 VDC	+24 VDC
Controller Interface	0 ÷ 10 V	0 ÷ 10V 4 ÷ 20 mA	Serial SSI binary/gray	TTL 5Vpp - 150 KHz	±10 VDC 4 ÷ 20 mA
Max speed	0,5 m/s	1 m/s	1 m/s	2 m/s	-
Max Resolution	< 0.4 % FS	< 0.2 % FS	5 µm	1 µm (@ 0.15 m/s)	< 0.4 % FS
Linearity error **(2)**	± 0.1% FS	< ±0.02% FS	< ± 0.02 % FS	< ± 0.001 % FS	< ±0.25% FS
Repeatability **(2)**	± 0.05% FS	< ± 0.005% FS	< ± 0.005 % FS	< ± 0.001 % FS	< ±0.1% FS

(1) power supply provided by digital controller
(2) percentage of total stroke
(3) Output derived from 4 different types of transducers, see tech table B310
(4) Output derived from 2 different types of transducers, see tech table B310
(5) Balluff BTL7 with SSI interface is not supported

Smart Servopump - SSP

high performance p/Q control and energy saving

P/Q CONTROL

SMART START-UP

SMART TUNING

MULTIPLE AXIS

SMART MAINTENANCE

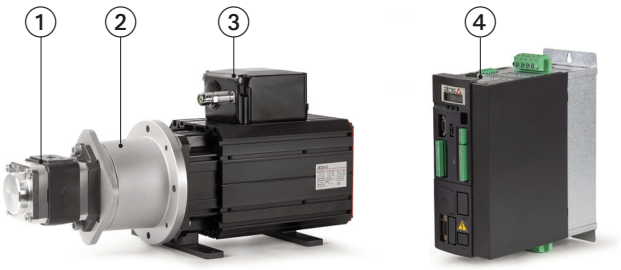

SSP-T-SP-NP-2032L-1015-032-*/T **/PE

① Internal gear pump
② Bellhousing with zero backlash coupling
③ Permanent magnets Servomotor
④ Drive

SSP is availabe in single pump (sect. 1.1) or doube pump execution (sect. 1.2).
SSP systems combine the typical advantages of hydraulic power transmission with the ease of control and adjustment of an electric drive while also ensuring maximum levels of energy efficiency.

Maximum flow:	**350 l/min**
Maximum rated power:	**100 kW**
Maximum continuous pressure:	
cast iron pump	**330 bar**
aluminium pump	**250 bar**

They consist of a fixed displacement internal gear pump, driven by a permanent magnet synchronous servomotor controlled by an electronic drive. The latter controls the speed of the servomotor and therefore of the pump, to adjust the flow rate or pressure of the system based on the reference signals received from the PLC of the machine.
A dedicated algorithm optimizes the p/Q function by automatically selecting the activation of the flow or pressure control.
Compared to traditional systems, SSPs offer the following advantages:

- significant reduction in energy consumption, as the pump operates at the speed strictly necessary to generate the required flow rate / pressure
- high dynamics and precision of p/Q control thanks to a dedicated algorithm
- reduction of the noise level, thanks to the design of the pump and the variable speed
- maximum flexibility thanks to dedicated software
- Smart Maintenance allows to plan in advance the replacement of worn components, maximizing productivity and minimizing maintenance costs
- simplified commissioning thanks to the Smart start-up and Smart tuning functions
- possibility of customization up to 4 axes with Multiple axis function

For more details see technical table AS050

1 MODEL CODE

1.1 Single pump execution

For optimal sizing, download the sizing software from MyAtos area at www.atos.com

SSP	-	T-SP	-	NP	-	2020L	-	1024	-	046	/	C	/	T		*	/	PE

Smart servopump

Control logic:
T-SP = alternated p/Q control with resolver

Fieldbus interface, serial port always present:
NP = Not present
BC = CANopen
BP = PROFIBUS DP
EH = EtherCAT
EP = PROFINET RT/IRT

Pump

PGI, cast iron pump, Pmax 330 bar **(1)** - see table AS300:

1011 = 10,8 cm³/rev	**2040** = 39,5 cm³/rev	**3080** = 80 cm³/rev
1016 = 15,6 cm³/rev	**2050** = 49,5 cm³/rev	**4080** = 80 cm³/rev
2020 = 20 cm³/rev	**4050** = 50 cm³/rev	**3100** = 100 cm³/rev
2025 = 24,5 cm³/rev	**3064** = 64 cm³/rev	**4100** = 100 cm³/rev
2032 = 31,6 cm³/rev	**4064** = 64 cm³/rev	

PGIL, aluminium pump, Pmax 250 bar - see table AS350:

2020L = 20 cm³/rev	**2040L** = 40,1 cm³/rev	**3080L** = 80 cm³/rev
2025L = 24,5 cm³/rev	**2050L** = 50 cm³/rev	**3100L** = 100 cm³/rev
2032L = 32,1 cm³/rev	**3064L** = 64 cm³/rev	**4125L** = 125 cm³/rev

(1) Pmax depends on the pump displacement

Drive D-MP - see table AS500:

022 = 22 A	**060** = 57,5 A	**140** = 140 A
032 = 32 A	**090** = 87 A	**165** = 165 A
046 = 46 A	**100** = 100 A	**210** = 210 A

Hydraulic option see section 8:
C = integrated block with relief valve and pressure transducer
D = as option C plus Smart Cooling functionality

Electronic function see section 9:
K = Drive with Safe Torque Off - always present

Port orientation see section 10:
T = standard
U, **V** = optional

Series number

Seals material
PE = FKM

Motor PMM - see table AS400:

1009 = 8,7 kW	**1032** = 30 kW	**2080** = 80 kW
1015 = 15 kW	**2042** = 42 kW	**2100** = 100 kW
1024 = 24 kW	**2055** = 55 kW	

1.2 Double pump execution

Second pump must be selected with equal or smaller displacement than first pump
Our specialists are available to give support in the sizing of SSP double pump executions

SSP - **T-SP** - **NP** - **2020** / **1011** - **1024** - **046** / **K** / **T** ***** / **PE**

Smart servopump

Control logic:
T-SP = alternated p/Q control with resolver

Fieldbus interface, serial port always present:
NP = Not present
BC = CANopen **EH** = EtherCAT
BP = PROFIBUS DP **EP** = PROFINET RT/IRT

First pump
PGI, cast iron pump, Pmax 330 bar **(1)** - see table AS320:
1011 = 10,8 cm³/rev **2025** = 24,5 cm³/rev **2050** = 49,5 cm³/rev
1016 = 15,6 cm³/rev **2032** = 31,6 cm³/rev
2020 = 20 cm³/rev **2040** = 39,5 cm³/rev

Second pump
PGI, cast iron pump, Pmax 330 bar - see table AS320:
1011 = 10,8 cm³/rev **1016** = 15,6 cm³/rev

(1) Pmax depends on the pump displacement

Series number

Seals material
PE = FKM

Port orientation see section 10:
T = standard
U, **V** = optional

Electronic function see section 9:
K = Drive with Safe Torque Off (always present)

Drive D-MP - see table AS500:
022 = 22 A **060** = 57,5 A **140** = 140 A
032 = 32 A **090** = 87 A **165** = 165 A
046 = 46 A **100** = 100 A **210** = 210 A

Motor PMM - see table AS400:
1009 = 8,7 kW **1024** = 24 kW **2042** = 42 kW
1015 = 15 kW **1032** = 30 kW **2055** = 55 kW

Typical double pump application

The double pump execution is particularly suitable for machine cycles in which phases with high flow rate and low pressure alternate with phases of high pressure and very low flow rate. This configuration allows, in fact, to limit the required shaft torque, reducing the size of the electrical motor and drive.
When the machine cycle requires high pressure and low flow rate, the venting valve ⑥ must be activated.

The suction valve ⑦ is necessary to allow oil suction from the tank in case SSP revolves in opposite direction when in pressure control phase, while the venting valve is activated.

The image below represents an example of hydraulic scheme for double pump execution. The assembled manifold is on customer behalf.

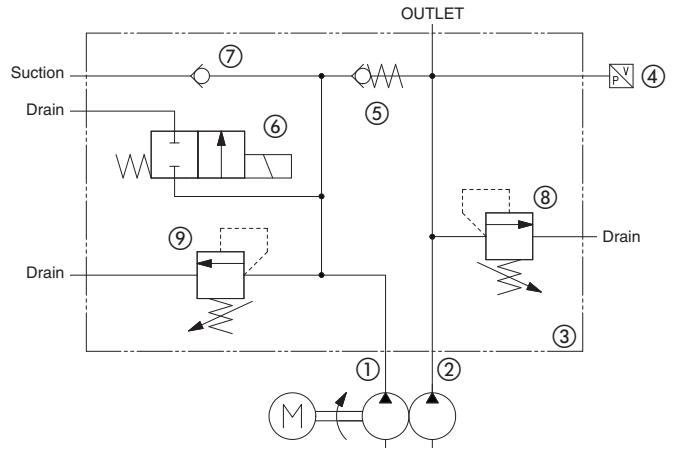

① First pump
② Second pump
③ Manifold - on customer behalf
④ Pressure transducer
⑤ Check valve
⑥ Venting valve
⑦ Check valve for suction flow
⑧ High pressure relief valve
⑨ Low pressure relief valve

Contact the Atos technical department for more details and support regarding the sizing of the SSP with a double pump execution.

2 FUNCTIONING DESCRIPTION

SSP servopumps are designed to efficiently and accurately generate and regulate hydraulic power at every stage of the machine cycle. The ability to modulate the required flow rate or pressure by varying the number of revolutions gives it a substantial advantage in terms of energy savings compared to traditional systems that operate at constant speed. Thanks to the high dynamics and dedicated algorithms, the SSP allow you to directly control the speed of movement and the force of the hydraulic actuators with optimal levels of precision and repeatability.
They consist of an internal gear pump, a permanent magnet servomotor and an electronic drive.
The drive is connected to an angular transducer which measures the rotation speed of the servomotor and to a pressure transducer. It manages the motor power supply, the operating logic and system diagnostics.

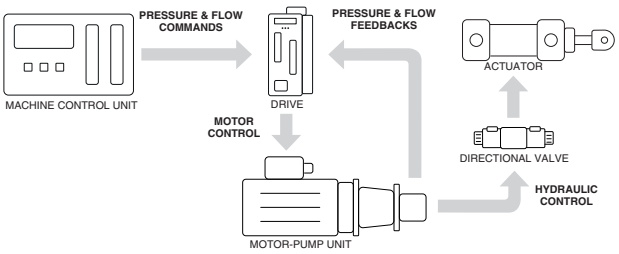

3 PROGRAMMING TOOLS

The functional parameters and configurations of the SSP servopumps can be easily set and optimized using the Atos S-SW-SETUP programming software by connecting the PC to the drive via the RS485 serial port.
The software allows the parameterization of the drive via the RS485 serial port even if the drive is connected to the machine central unit via fieldbus.

S-SW-SETUP support: NP (Serial) BC (CANopen) EH (EtherCAT)
BP (PROFIBUS DP) EP (PROFINET)

Note: For detailed descriptions of settings, wiring and installation procedures, refer to the user manual included in S-SW-SETUP

PC connection

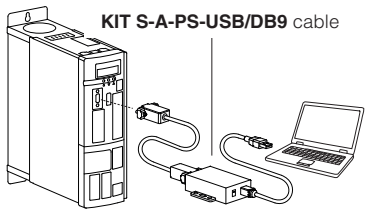

4 FIELDBUS

Fieldbus allows direct communication between the Drive and the machine control unit for digital reference, extended diagnostics and servopump settings. However, the fieldbus versions allow the servopump to be controlled also through analog references.

5 GENERAL CHARACTERISTICS

Installation position	Motor and pump: horizontal position Drive: wall mounting, vertical position	
Ambient temperature range	Motor and pump: -20°C ÷ 40°C Drive: -10°C ÷ 50°C	motor and drive derate in power for higher temperature
Altitude	up to 2000 m, motor and drive derate in power for higher altitude	
Compliance	CE according to EMC directive 2014/30/EU and LVD 2014/35/EU Rohs directive 2011/65/EU as last update by 2015/863/EU	

6 HYDRAULIC CHARACTERISTICS

Hydraulic fluid		HL, HLP DIN 51524...535, for other fluids contact Atos technical office	
Fluid temperature range		-20°C ÷ 80°C	
Recommended viscosity		10 ÷ 300 mm²/s - cold start max 2000 mm²/s	
Max fluid contamination level	normal operation	ISO4406 class 20/18/15 NAS1638 class 9	see also fiter section at www.atos.com or KTF catalog
	longer life	ISO4406 class 18/16/13 NAS1638 class 7	
Min/max inlet pressure	(bar abs)	from 0.8 to 2 bar. Recommended ⩾ 1	

7 DRIVE ELECTRICAL CHARACTERISTICS

Rated IN voltage [V]	200 V -10% ÷ 480 V +10% @ 45 ÷ 65 Hz for drive 022 ÷ 060 400 V -10% ÷ 480 V +10% @ 45 ÷ 65 Hz for drive 090 ÷ 210			
DC Bus voltage [V]	280 V -10% ÷ 600 V +10% for drive 022 ÷ 060 280 V -10% ÷ 640 V +10% for drive 090 ÷ 210			
24VDC input power supply	24 VDC ±10% @ max 1,0 A for drives type 022, 090, 100, 140, 165, 210 24 VDC ±10% @ max 1,3 A for drive type 032 24 VDC ±10% @ max 1,8 A for drives type 046, 060			
24VDC output power supply	24 VDC ±10% @ max 500 mA - only for drives type 090, 100, 140, 165, 210			
Digital inputs	24 VDC ±10% @ max 10 mA			
Digital outputs	30 VDC @ max 60 mA			
Analog inputs	±10 V @ max 0,5 mA or 4 ÷ 20 mA (Dip-switch selectable - see user manual)			
Analog outputs	±10 V @ max 2 mA			
Protection degree to DIN EN60529	Motor: IP54 (IP65 on request); Drive: IP20			
Communication interface	Atos ASCII coding	CANopen EN50325-4 + DS408	PROFIBUS DP EN50170-2/IEC61158	EtherCAT, PROFINET IO RT / IRT EC 61158
Communication physical layer	insulated RS485	optical insulated CAN ISO11898	optical insulated RS485	Fast Ethernet, insulated 100 Base TX

8 **HYDRAULIC OPTION** - not for double pump execution

C = This option provides a hydraulic block mounted directly on the pump outlet, which integrates a mechanical pressure relief valve with safety function on the maximum system pressure and a pressure transducer for the feedback of the actual pressure on the delivery line.

① Mechanical pressure relief valve; the valve is supplied with zero adjustment, and must be adjusted by the user at a pressure slightly higher than the maximum pressure required by the system.

② Pressure transducer E-ATR-8/400/I - see technical table GS465

D = This option allows to protect the pump from overheating when it is subjected to particularly heavy duty cycles, in particular in the prolonged phases of static pressure control.
This option includes a hydraulic block with relief valve and pressure transducer, as for the /C option, with also integrated:

③ Smart Cooling cartridge valve JO-DL-4-2/NC-X 24DC - see technical table E105

When a temperature considered critical is reached, the Smart Cooling valve opens ③ as to cause a small recirculation of oil through the pump which protects it from dangerous overheating.

The sizing software for SSP suggests the need for the /D option based on the machine cycle.

Options **C** and **D** dimensions

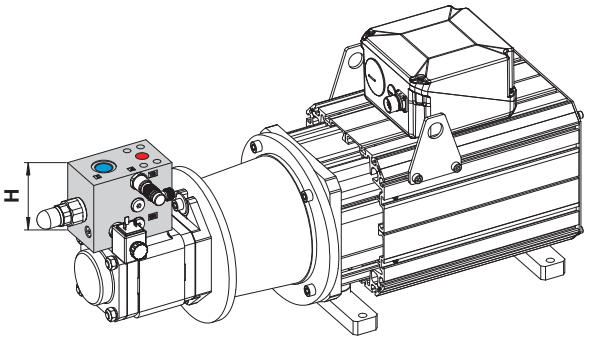

SSP CODE	OUTLET	**Dr** (drain)	**H** (mm)
SSP-T-SP-1011**	1/2” SAE3000	G1/2”	105
SSP-T-SP-1016**			
SSP-T-SP-2020***	3/4” SAE3000	G3/4”	110
SSP-T-SP-2025***			
SSP-T-SP-2032***			
SSP-T-SP-2040***	1” SAE3000	G1”	115
SSP-T-SP-2050***			
SSP-T-SP-4050**	1” SAE6000	G1”	115
SSP-T-SP-3064***	1” SAE6000	G1 1/4”	125
SSP-T-SP-4064**			
SSP-T-SP-3080***	1 1/4” SAE6000	G1 1/2”	140
SSP-T-SP-4080***			
SSP-T-SP-3100***			
SSP-T-SP-4100**			
SSP-T-SP-4125**	1 1/2” SAE6000	G 2”	140

Detail option **C**

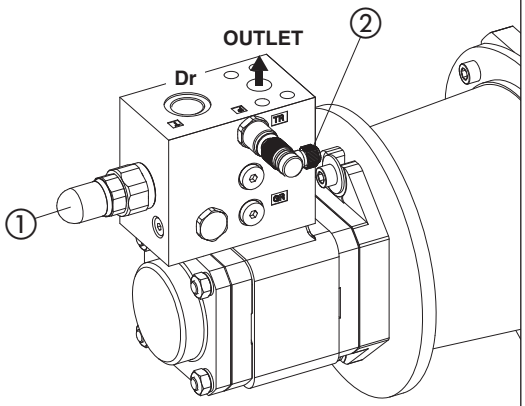

Hydraulic scheme option C

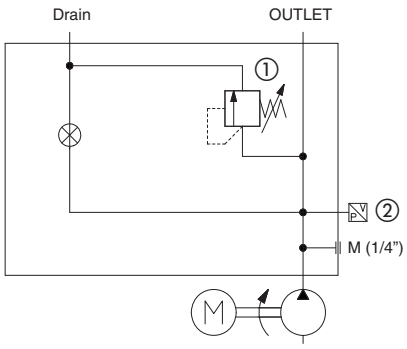

Detail option **D**

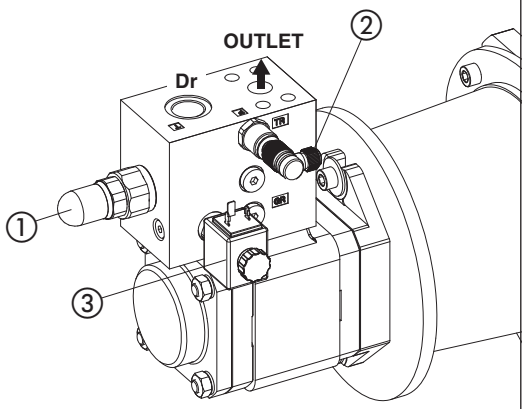

Hydraulic scheme option D

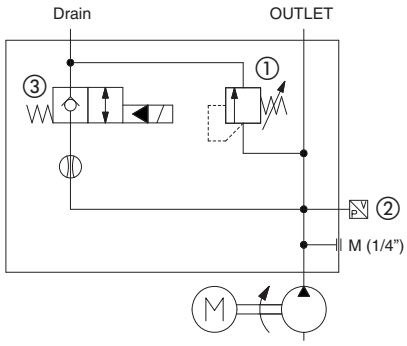

9 ELECTRONIC FUNCTION - always present

K = The drive implements the Safe Torque Off (STO) function as a prevention of unexpected starts according to 2006/42/EC Machinery Directive (MD) - standard EN 61800-5-2.

This function prevents the generation of a rotating magnetic field removing the power semiconductor control voltage allowing short-term operations (such as cleaning and / or maintenance work on parts of non-electrical devices of the machine) without disconnecting drive power supply or the connection between the drive and the servomotor.

For detailed descriptions, please refer to the S-MAN-HW installation manual.

Possible combined option - not for double pump execution
/CK, /DK

10 PORTS ORIENTATION

The pump can be supplied with inlet and outlet ports oriented in different configurations, as shown in the figure (seen from the bottom of the pump)

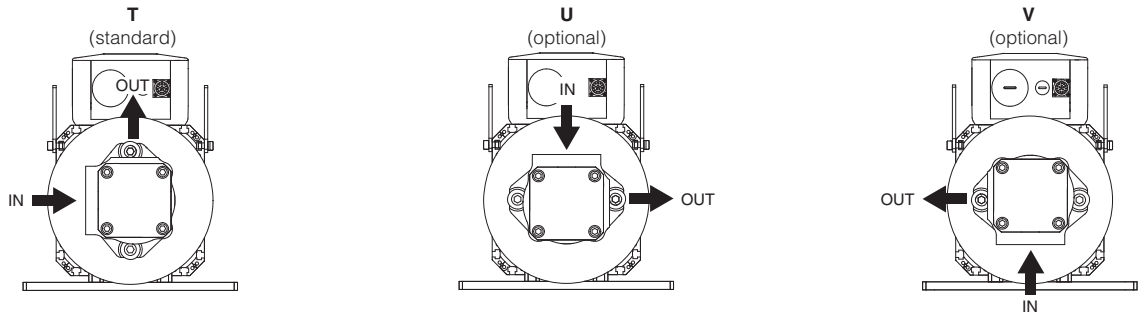

11 INSTALLATION DIMENSIONS - motor pump unit [mm] for drive dimensions see AS500

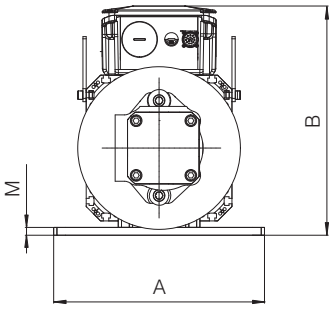

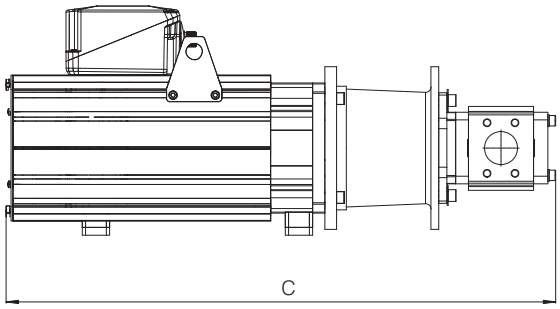

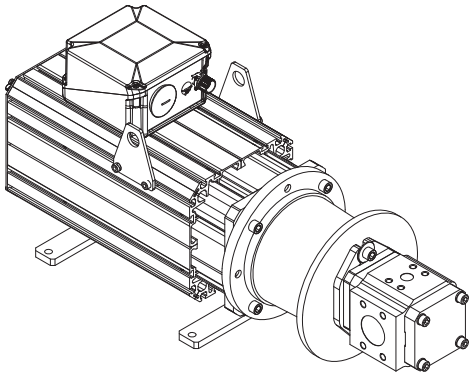

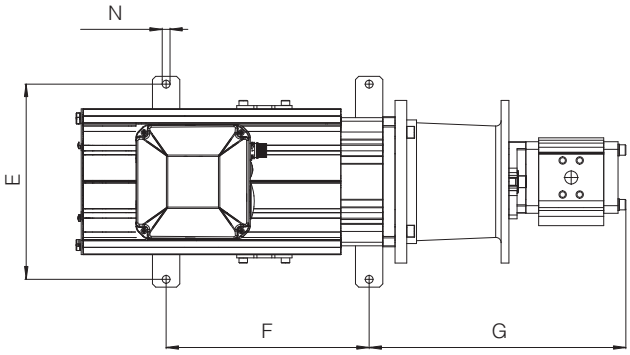

MODEL CODE	A	B	C	E	F	G	M	N	Mass [Kg]
SSP-*-**1011-1009**-*	324	335	630	300	168	324	12	12	56
SSP-*-**1011-1015**-*		355	700		240				68
SSP-*-**1016-1009**-*	324	335	640	300	168	334	12	12	56
SSP-*-**1016-1015**-*		355	710		240				68
SSP-*-**2020*-1009**-*	324	335	680	300	168	373	12	12	62
SSP-*-**2020*-1015**-*		355	750		240				74
SSP-*-**2020*-1024**-*			820		312				90
SSP-*-**2020-1032**-*			890		385				105
SSP-*-**2025-1009**-*	324	335	680	300	168	363	12	12	62
SSP-*-**2025-1015**-*		355	750		240				75
SSP-*-**2025-1024**-*			820		312				90
SSP-*-**2025-1032**-*			890		385				106
SSP-*-**2032*-1009**-*	324	335	680	300	168	368	12	12	63
SSP-*-**2032*-1015**-*		355	750		240				76
SSP-*-**2032*-1024**-*			820		312				91
SSP-*-**2032*-1032**-*			890		385				107
SSP-*-**2032-2042**-*	384	435	890	356	275	417	14	18	145
SSP-*-**2040*-1009**-*	324	355	690	300	168	381	12	12	67
SSP-*-**2040*-1015**-*			760	300	240				79
SSP-*-**2040*-1024**-*			830		312				94
SSP-*-**2040*-1032**-*			900		385				110
SSP-*-**2040*-2042**-*	384	435	900	356	275	430	14	18	148
SSP-*-**2050*-1009**-*	324	355	700	300	168	395	12	12	69
SSP-*-**2050*-1015**-*			770	300	240				81
SSP-*-**2050*-1024**-*			840		312				96
SSP-*-**2050*-1032**-*			910		385				112
SSP-*-**2050*-2042**-*	384	435	910	356	275	444	14	18	150
SSP-*-**2050*-2055**-*		450	970		330				172

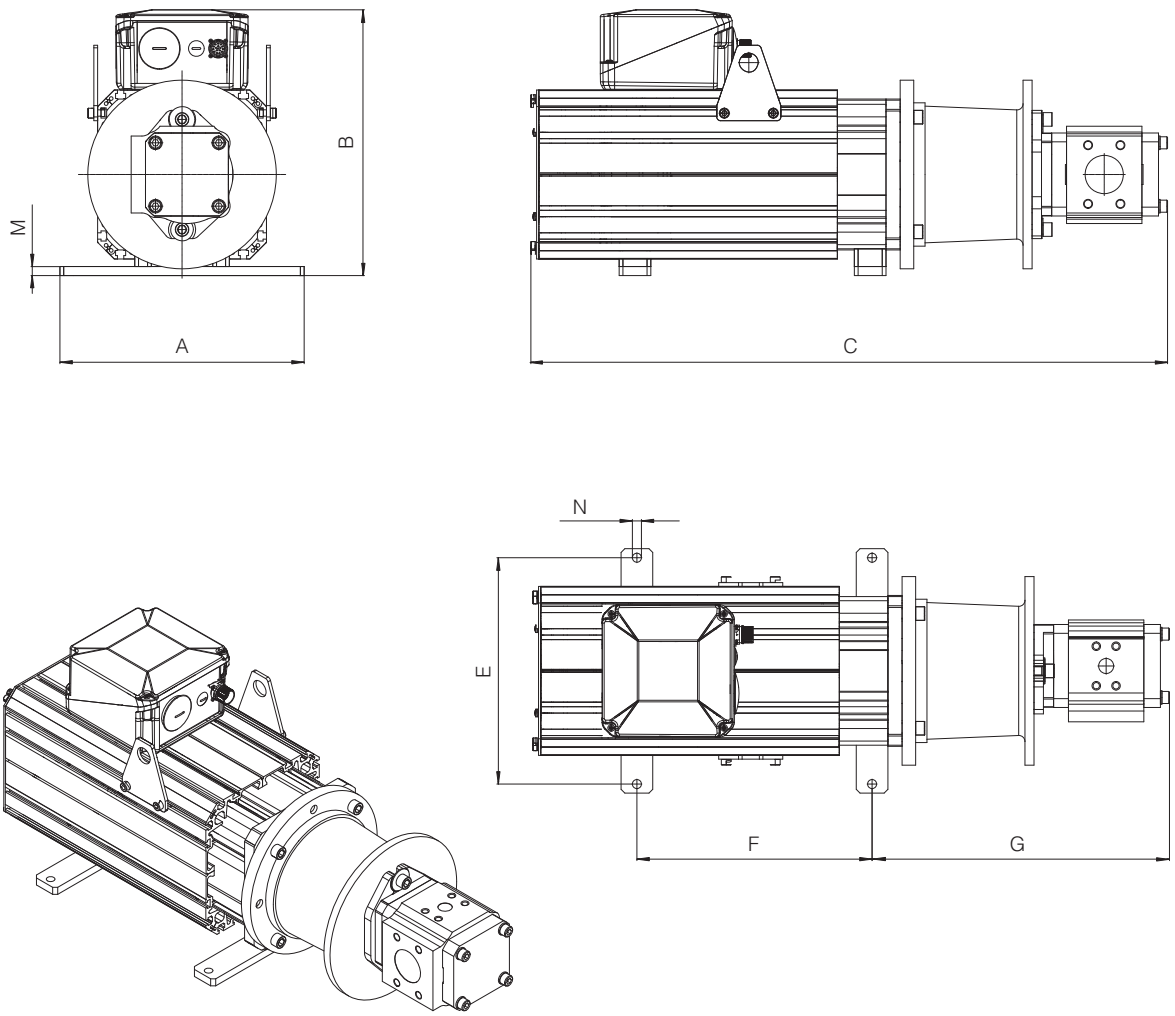

MODEL CODE	A	B	C	E	F	G	M	N	Mass [Kg]
SSP-*-**3064*-1024**-*	324	355	830	300	312	383.5	12	12	94
SSP-*-**3064*-1032**-*			900		385				111
SSP-*-**3064*-2042**-*	384	435	930	356	275	456.5	14	18	149
SSP-*-**3064*-2055**-*		450	980		330				170
SSP-*-**3064*-2080**-*			112		476				213
SSP-*-**3080*-1024**-*	324	355	840	300	312	395.5	12	12	97
SSP-*-**3080*-1032**-*			920		385				113
SSP-*-**3080*-2042**-*	384	435	940	356	275	468.5	14	12	151
SSP-*-**3080*-2055**-*		450	1000		330				172
SSP-*-**3080*-2080**-*			1123		476				216
SSP-*-**3080-2100**-*			1200		583				257
SSP-*-**3100*-1024**-*	324	355	860	300	312	411.5	12	12	98
SSP-*-**3100*-1032**-*		355	930		385	411.5	12	12	115
SSP-*-**3100*-2042**-*	384	435	950	356	275	484.5	14	18	152
SSP-*-**3100*-2055**-*		450	1011		330				174
SSP-*-**3100*-2080**-*			1140		476				217
SSP-*-**3100*-2100**-*		490	1210		583				258
SSP-*-**4050-1015**-*	324	355	810	300	240	427	12	12	108
SSP-*-**4050-1024**-*			870		312				122
SSP-*-**4050-1032**-*			950		385				138
SSP-*-**4050-2042**-*	384	435	950	356	275	481	14	18	166
SSP-*-**4050-2055**-*		450	1011		330				187
SSP-*-**4050-2080**-*			1155		476	500			239

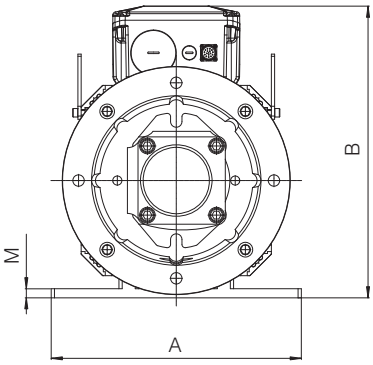

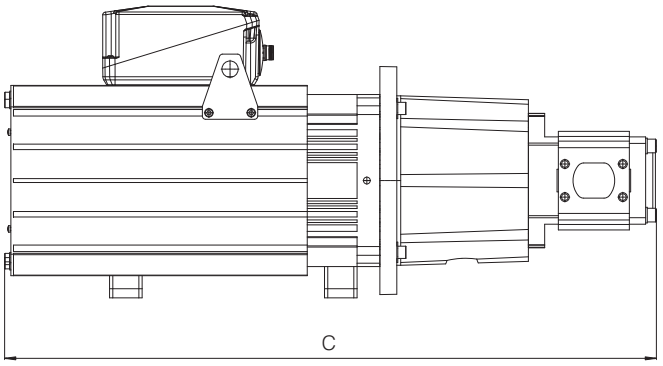

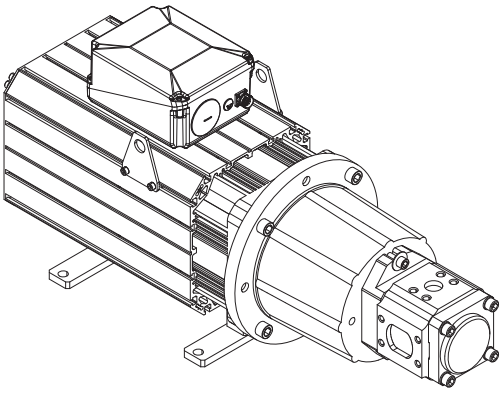

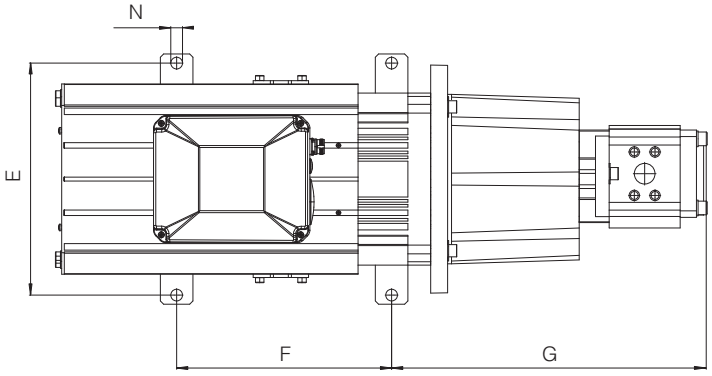

MODEL CODE	A	B	C	E	F	G	M	N	**Mass** [Kg]
SSP-*-**4064-1024**-*	324	355	860	300	312	438	12	12	124
SSP-*-**4064-1032**-*			960		385				140
SSP-*-**4064-2042**-*	384	445	48	356	275	492	14	18	168
SSP-*-**4064-2055**-*		450	1020		330				189
SSP-*-**4064-2080**-*			1166		476	511			241
SSP-*-**4080-1024**-*	324	355	890	300	312	447	12	12	126
SSP-*-**4080-1032**-*			970		385				142
SSP-*-**4080-2042**-*	384	435	970	356	275	501	14	18	170
SSP-*-**4080-2055**-*		450	1032		330				191
SSP-*-**4080-2080**-*			1175		476	520			243
SSP-*-**4080-2100**-*			1250		583				284
SSP-*-**4100-1032**-*	324	355	980	300	385	460	12	12	145
SSP-*-**4100-2042**-*	384	435	980	356	275	514	14	18	173
SSP-*-**4100-2055**-*		450	1040		330				194
SSP-*-**4100-2080**-*			1188		476	533			246
SSP-*-**4100-2100**-*			1260		583				287
SSP-*-**4125L-2042**-*	384	435	980	356	275	509	14	18	162
SSP-*-**4125L-2055**-*		450	1032		330				183
SSP-*-**4125L-2080**-*			1150		476	528			229
SSP-*-**4125L-2100**-*		490	1183		583				234

12 INSTALLATION DIMENSIONS - motor double pump unit [mm] for drive dimensions see AS500

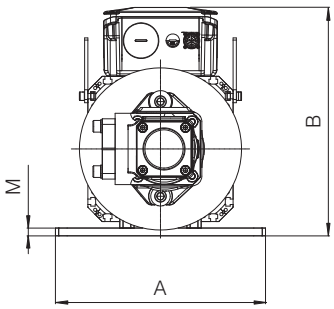

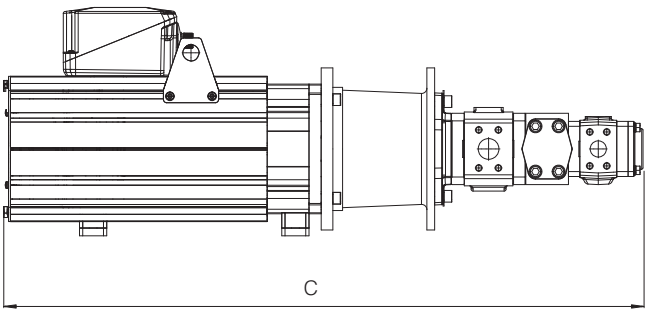

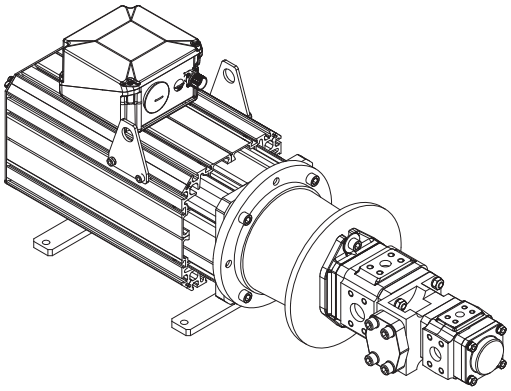

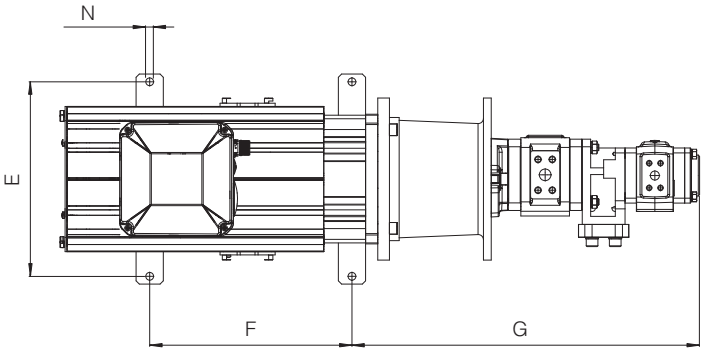

MODEL CODE	A	B	C	E	F	G	M	N	Mass [Kg]
SSP-*-**1011/1011-1009**-*	324	335	757	300	168	451	12	12	61
SSP-*-**1011/1011-1015**-*		355	827		240				73
SSP-*-**1016/1011-1009**-*	324	335	767	300	168	461	12	12	61
SSP-*-**1016/1011-1015**-*		355	837		240				73
SSP-*-**2020/1011-1009**-*	324	335	817	300	168	510	12	12	67
SSP-*-**2020/1011-1015**-*		355	887		240				79
SSP-*-**2020/1011-1024**-*			957		312				95
SSP-*-**2020/1011-1032**-*			1027		385				110
SSP-*-**2025/1011-1009**-*	324	335	816	300	168	499	12	12	67
SSP-*-**2025/1011-1015**-*		355	886		240				80
SSP-*-**2025/1011-1024**-*			956		312				95
SSP-*-**2025/1011-1032**-*			1026		385				111
SSP-*-**2032/1011-1009**-*	324	335	816	300	168	504	12	12	68
SSP-*-**2032/1011-1015**-*		355	886		240				81
SSP-*-**2032/1011-1024**-*			956		312				96
SSP-*-**2032/1011-1032**-*			1026		385				112
SSP-*-**2032/1011-2042**-*	384	435	1026	356	275	553	14	18	150
SSP-*-**2040/1011-1009**-*	324	355	826	300	168	517	12	12	72
SSP-*-**2040/1011-1015**-*			896	300	240				84
SSP-*-**2040/1011-1024**-*			966		312				99
SSP-*-**2040/1011-1032**-*			1036		385				115
SSP-*-**2040/1011-2042**-*	384	435	1036	356	275	566	14	18	153
SSP-*-**2050/1011-1009**-*	324	355	836	300	168	531	12	12	74
SSP-*-**2050/1011-1015**-*			906	300	240				86
SSP-*-**2050/1011-1024**-*			976		312				101
SSP-*-**2050/1011-1032**-*			1046		385				117
SSP-*-**2050/1011-2042**-*	384	435	1046	356	275	580	14	18	155
SSP-*-**2050/1011-2055**-*		450	1106		330				177

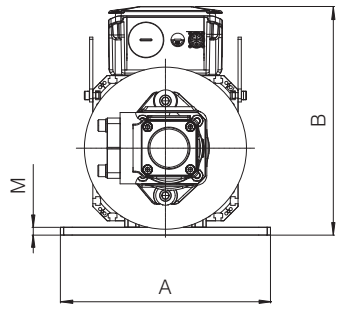

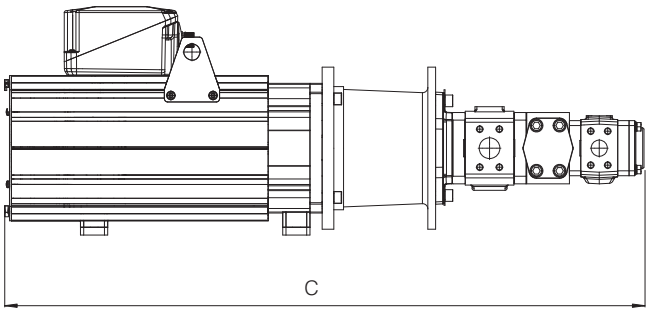

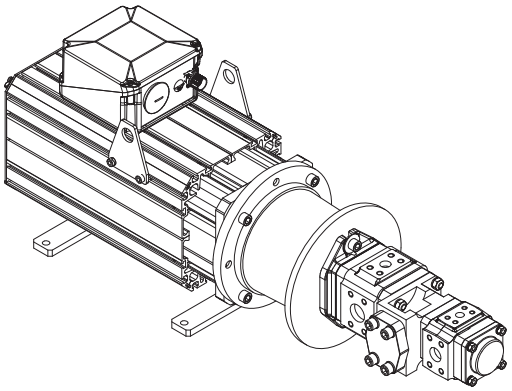

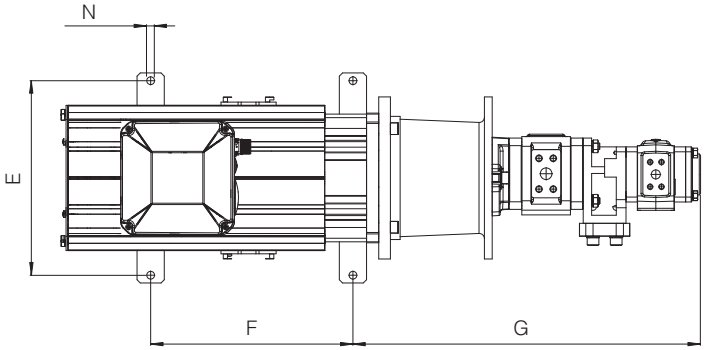

MODEL CODE	A	B	C	E	F	G	M	N	**Mass** [Kg]
SSP-*-**1016/1016-1009**-*	324	335	777	300	168	471	12	12	65
SSP-*-**1016/1016-1015**-*		355	847		240				74
SSP-*-**2020/1016-1009**-*	324	335	806	300	168	510	12	12	68
SSP-*-**2020/1016-1015**-*		355	876		240				80
SSP-*-**2020/1016-1024**-*			946		312				96
SSP-*-**2020/1016-1032**-*			1016		385				111
SSP-*-**2025/1016-1009**-*	324	335	799	300	168	500	12	12	68
SSP-*-**2025/1016-1015**-*		355	869		240				81
SSP-*-**2025/1016-1024**-*			939		312				96
SSP-*-**2025/1016-1032**-*			1009		385				111
SSP-*-**2032/1016-1009**-*	324	335	826	300	168	505	12	12	69
SSP-*-**2032/1016-1015**-*		355	896		240				82
SSP-*-**2032/1016-1024**-*			966		312				97
SSP-*-**2032/1016-1032**-*			1036		385				114
SSP-*-**2032/1016-2042**-*	384	435	1036	356	275	554	14	18	151
SSP-*-**2040/1016-1009**-*	324	355	836	300	168	518	12	12	73
SSP-*-**2040/1016-1015**-*			906	300	240				85
SSP-*-**2040/1016-1024**-*			976		312				100
SSP-*-**2040/1016-1032**-*			1036		385				116
SSP-*-**2040/1016-2042**-*	384	435	1036	356	275	567	14	18	154
SSP-*-**2050/1016-1009**-*	324	355	846	300	168	532	12	12	75
SSP-*-**2050/1016-1015**-*			916	300	240				87
SSP-*-**2050/1016-1024**-*			986		312				102
SSP-*-**2050/1016-1032**-*			1056		385				118
SSP-*-**2050/1016-2042**-*	384	435	1056	356	275	581	14	18	156
SSP-*-**2050/1016-2055**-*		450	1116		330				178

13 RELATED DOCUMENTATION

AS050 Basics for Smart Servopumps - SSP
AS200 Sizing criteria for servopumps
AS300 PGI cast iron internal gear pumps, high pressure
AS320 PGIX cast iron double internal gear pumps, high pressure
AS350 PGIL aluminium internal gear pumps
AS400 PMM high performance synchronous servomotors
AS500 D-MP electronic drives
AS800 Programming tools for pumps & servopumps
AS810 Accessories for servopumps
AS910 Operating and maintenance information for servopumps
GS510 Fieldbus
S-MAN-HW Servopumps installation manual
S-MAN-SW Servopumps programming software manual

Digital proportional valves with p/Q control

directional valves with LVDT transducer and on-board driver

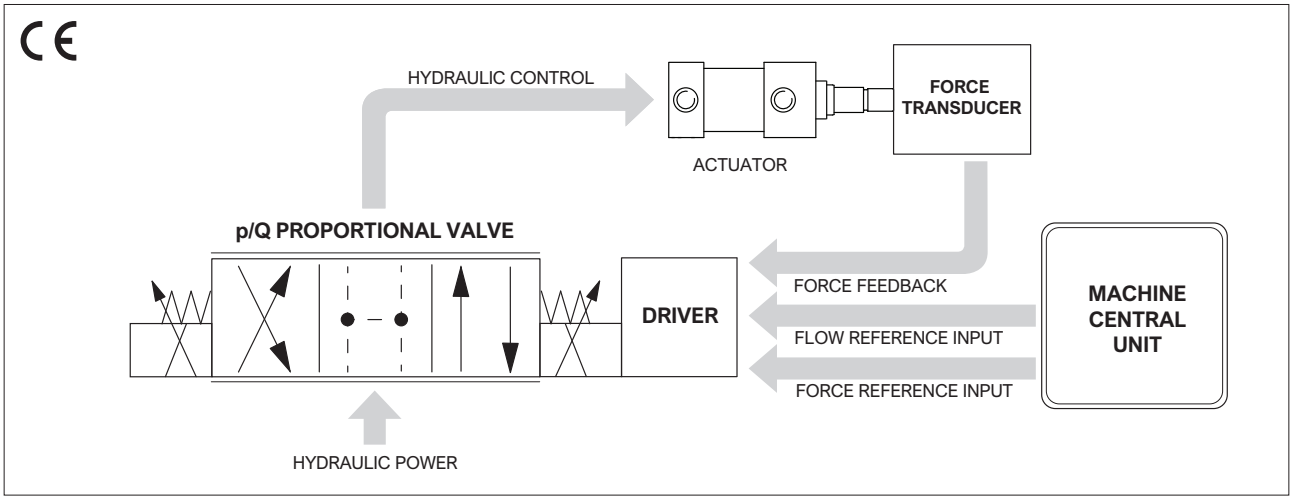

1 GENERAL DESCRIPTION

Proportional directional valves with p/Q control are identified by option SP, SF or SL and they are designed to perform the alternated regulation of speed/position/force of hydraulic actuators.
These options add the closed loop control of pressure (for SP) or force (for SF and SL) to the standard direction and flow regulation operated by the servoproportional and high performance proportional directional valves.

Note: for simplification, the following description always refers to the “force control”, even if for the SP option the control is the “pressure”.

The switching from the flow control to the force control is automatically performed by the valve thanks to a sophisticated algorithm.
The advantage offered by this solution is the high accurate and high dynamic control of the machine actuator in terms of direction, speed, position and force, all performed by a single valve.

2 FUNCTIONAL DESCRIPTION

The alternated p/Q control is operated by means of two electronic reference signals sent from the machine central unit to the valve driver: one for flow regulation and one for regulation. The valve driver has to be interfaced to a remote pressure transducer or to a load cell for the measurement and feedback of the actual pressure or force.
The SP option controls the pressure on A user port and it has to be interfaced to a single pressure transducer.
The SF option controls the force by measuring the delta p across A and B user ports and it has to be interfaced to two pressure transducers.
The SL option directly controls the actuator force and it has to be interfaced to a load cell.

See section 4 for configuration examples.

A dedicated algorithm automatically selects which control (flow or force) will be active time by time. The dynamics of the switching between the two controls can be regulated thanks to specific software setting, in order to avoid instability or vibrations.
The flow regulation is active when the actual system force measured by the force transducer is lower than the relevant input reference signal.
The valve normally works to regulate the flow by controlling in closed-loop the spool position through the on-board LVDT transducer.
The force control is activated when the actual system force, measured by remote transducers, reaches the setpoint defined by the relevant force reference input signal and meets the regulation requirements defined within the control algorithm.
The flow regulation is consequently reduced to keep steady the closed loop regulation of the force.
If the force decreases below its input reference signal, the flow control returns active.

The dynamic response of the force control can be adapted to different system characteristics, by setting the internal PID parameters using Atos PC software. Up to 4 different PIDs are selectable to optimize the system dynamic response according to different hydraulic working conditions.

3 VALVES RANGE

Options SP, SF, SL are available for high performance proportional directional valves and servoproportional valves with TES/LES on-board digital driver or TEZ/LEZ on-board digital driver + axis card.
Valve’s performance characteristics and overall dimensions remains unchanged as per standard valve models, refer to specific FS** technical tables.

Servoproportionals:

DLHZO-TES, DLKZOR-TES - direct, zero spool overlap, sleeve execution - technical tables **FS180**
DHZO-TES, DKZO-TES - direct, zero spool overlap - technical tables **FS168**
DPZO-LES - piloted, zero spool overlap - technical table **FS178**
LIQZP-LES - 3-way servocartridges - technical table **FS340**

Servoproportionals with TEZ/LEZ on-board digital driver + axis card:

DLHZO-TEZ, DLKZOR-TEZ - direct, zero spool overlap, sleeve execution - technical tables **FS610**
DHZO-TEZ, DKZOR-TEZ - direct, zero spool overlap - technical tables **FS620**
DPZO-LEZ - piloted, zero spool overlap - technical tables **FS630**

High perfomance proportionals:

DHZO-TES, DKZOR-TES - direct, positive spool overlap - technical table **FS165**
DPZO-LES - piloted, positive spool overlap - technical table **FS175**

4 SP, SF, SL CONFIGURATION EXAMPLES

SP - Pressure Control - 1 pressure transducer

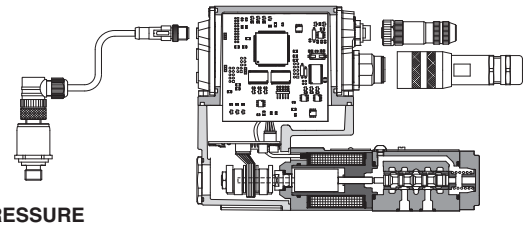

PRESSURE TRANSDUCER

e.g. DLHZO-TES- **SP** -BP PROFIBUS DP

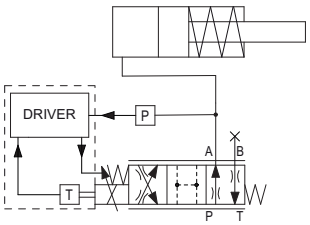

one remote pressure transducer has to be installed on the actuator's port to be controlled. In this example the SP option regulates the pressure on port A

SF - Force Control - 2 pressure transducers

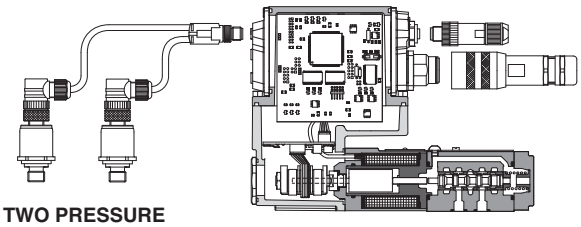

TWO PRESSURE TRANSDUCERS

e.g. DLHZO-TES- **SF** -EH EtherCAT

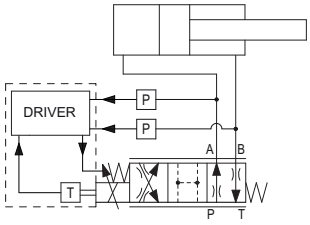

two remote pressure transducers have to be installed on the actuator's ports A and B.

The bore and rod dimensions of the actuator have to be input into the valve software, which calculates the relevant areas:
A1 = bore area; A2 = ring area

The SF option directly controls the actuator force (F) as result of the following calculation:
F = (Pa x A1) - (Pb x A2)

SL - Force Control - 1 load cell

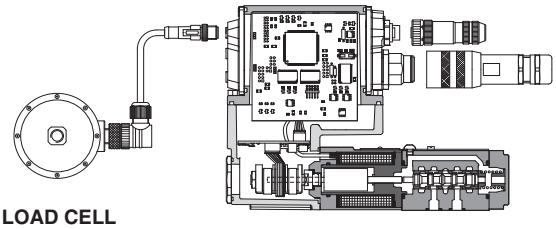

LOAD CELL

e.g. DLHZO-TES- **SL** -EW POWERLINK

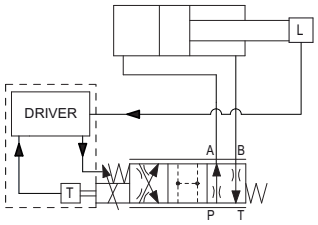

one load cell transducer has to be installed between the actuator and the controlled load
The SL option directly control the actuator force

5 GENERAL NOTES

Atos digital proportionals valves are CE marked according to the applicable directives (e.g. Immunity and Emission EMC Directive).
Installation, wirings and start-up procedures must be performed according to the general prescriptions shown in tech table **FS900** and in the user manuals included in the E-SW-SETUP and Z-SW-SETUP programming software.

6 VALVE SETTINGS AND PROGRAMMING TOOLS - see tech. table **GS500**

Free downloadable software for PC allows to set all valve functional parameters and to access complete diagnostic information of digital valve drivers and axis controls via Bluetooth/USB service port.
Atos E-SW-SETUP and Z-SW-SETUP PC software supports all Atos digital valve drivers and axis controls and they are available at www.atos.com in MyAtos area.

WARNING: driver and axis card USB port is not isolated! For E-C-SB-USB/M12 cable, the use of E-A-SB-USB/OPT isolator adapter is highly recommended for PC protection

WARNING: for the list of countries where the Bluetooth adapter has been approved, see tech. table **GS500**

Bluetooth or USB connection

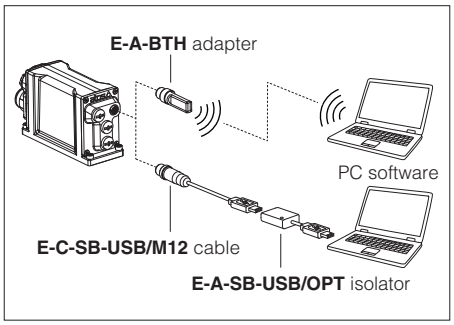

7 FUNCTIONAL EXAMPLES

The following functional examples are just generic reference of the possible applications of with proportional directional valves with alternated p/Q control, **SP**, **SF**, **SL**.
Please contact Atos technical department for additional evaluations related to specific applications usage.

7.1 High-dynamic pressure reducing controls - only for SP

Directional proportional valves with zero spool overlap and SP control, are operated in 3-way hydraulic configuration to obtain high-dynamic pressure reducing control on the A (or B) user port:

- flow reference signal is used to limit the maximum flow during the pressure regulation
- pressure reference signal is used to regulate the pressure on the valve's A user port; the rapid/repeatable response of the pressure control is performed in high dynamics by the directional valve's closed loop regulation

Requirements:

- an remote pressure transducer has to be installed in the hydraulic system on the controlled user port (when using 4 way valves either A or B port can be used while the not controlled port must be plugged)
- zero overlap valves without fail safe position are recommended;

⚠ Positive overlap valves with PABT ports closed in central position are not suitable for this application

High-dynamic - only for **SP**

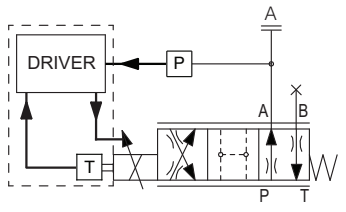

3 way connection SP

7.2 Single effect actuators with speed/pressure/force controls - only for SP or SL

Directional proportional valves with SP or SL control, are operated in 3-way hydraulic configuration to control speed/pressure (force) on single effect actuators:

- flow reference signal is used to regulate the actuator's forward and backward speed while pressure (force) reference signal is used to limit the maximum pushing pressure (force) to the actuator
  or
- pressure (force) reference signal is used to regulate the actuator pushing pressure (force) while flow reference signal is used to limit the maximum actuator speed

Requirements:

- for SP control a remote pressure transducer has to be installed in the hydraulic system on the actuator pushing port
- for SL control a remote force transducer has to be installed between the actuator and the controlled load
- zero overlap valves without fail safe position are recommended;

⚠ Positive overlap valves with PABT ports closed in central position are not suitable for this application

Single effect - only for **SP** or **SL**

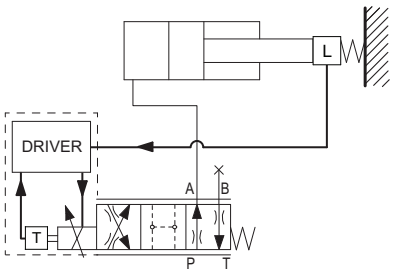

3 way connection SL

7.3 Double effect actuators with speed/pressure controls - only for SP

Directional proportional valves with SP control, regulate speed/pressure on double effect actuators:

- flow reference signal is used to regulate the actuator's forward and backward speed while pressure reference signal is used to limit the maximum pushing pressure of the actuator
  or
- pressure reference signal is used to regulate the actuator pushing pressure while flow reference signal is used to limit the maximum forward and backward actuator speed

Requirements:

- a remote pressure transducer has to be installed on the actuator's pushing port
- a dedicated Q5 spool with strong "meter-in" characteristic in central position has to be used; during pressure regulation, the not controlled port remains connected to T line to avoid any back pressure - see section 7.4

⚠ Positive overlap valves with PABT ports closed are not suitable for this application

Double effect - only for **SP**

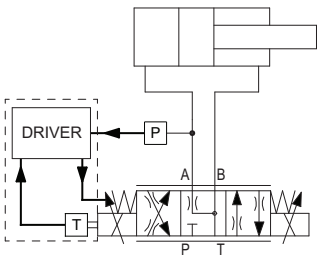

4 way connection SP

7.4 Q5 spool for 4 way connection with SP control

Spool type **Q5** allows fast direction reverse during motion phases (e.g. ejector motion with max strain limitation)

① depressuring (pressure control active)

② backward movements (flow control active)

③ forward movements (flow or pressure control active)

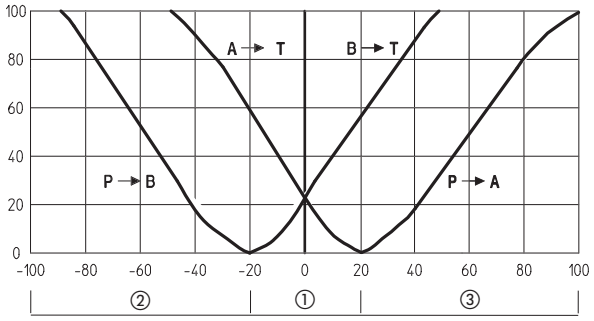

7.5 Double effect actuators with force limit/regulation - only for **SF** or **SL**

4 way directional proportional valves with SF or SL control, regulate speed/force on double effect actuators:

- flow reference signal is used to regulate the actuator's forward and backward speed while force reference signal is used to limit the maximum pushing and pulling force of the actuator

  or
- force reference signal is used to regulate the actuator pushing and pulling force while flow reference signal is used to limit the maximum actuator speed

Requirements:

- for SF two remote pressure transducers have to be installed on the both actuator's ports
- for SL one push/pull load cell transducer has to be installed between the actuator and the controlled load
- zero overlap valves are recommended;

⚠ positive overlap valves with PABT ports closed in central position are not suitable for this application

Advantages:

- force control is possible in both push and pull directions
- SL allows a more precise force control despite of a more complex installation of the load cell transducer
- SF allows to add force control also into existing systems thanks to the simple installation of pressure transducers

Control modes:

- Flow priority: flow reference signal is used to move forward and backward the actuator while force is limited/regulated in both push and pull direction
- Force priority: force reference signal is used to control both push and pull forces while flow is limited/regulated in both direction

Double effect - only for **SF** or **SL**

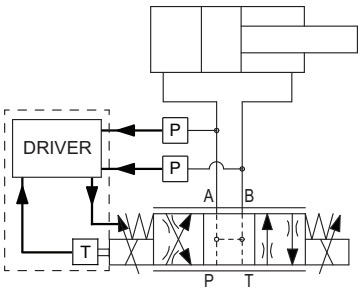

4 way connection SF

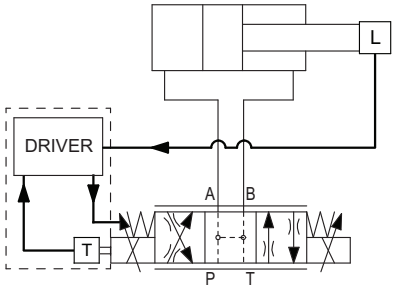

4 way connection SL

Note:

auxiliary check valves are recommended to intercept A and B lines in case of specific hydraulic configuration requirements in absence of power supply or fault

7.6 Flow priority

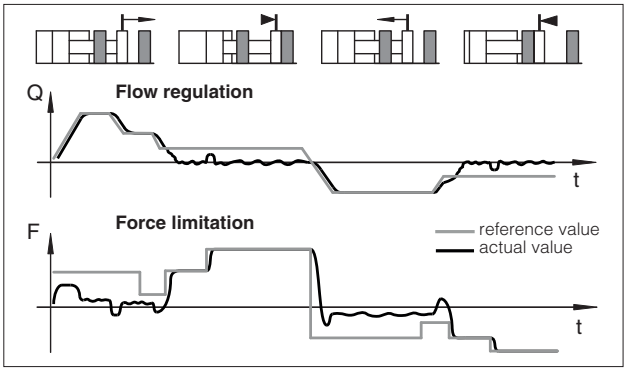

7.7 Force priority

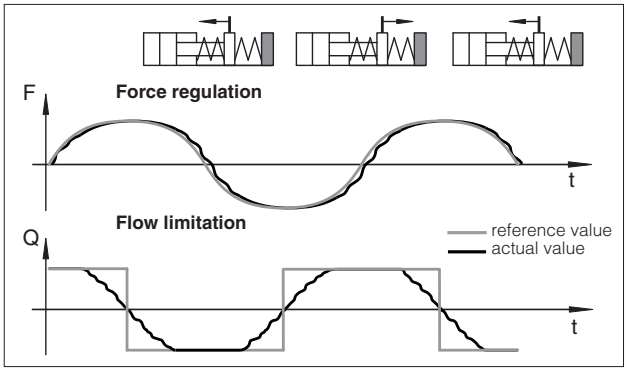

8 PRESSURE/FORCE TRANSDUCER CHARACTERISTICS

The accuracy of the pressure/force control is strongly dependent to the selected pressure/force transducers.

Pressure/force controls require to install remote pressure transducers or load cell to measure the actual pressure/force values:

- **Pressure Transducers:** allow easy system integration and cost effective solution for both pressure and force controls, see tech table **GS465** for E-ATR-8 pressure transducer details
- **Load Cell Transducers:** allow the user to get high accuracy and precise regulations for force control, but it increases the complexity of the mechanical installation

The characteristics of the remote pressure/force transducers must be always selected to match the application requirements and to obtain the best performances: transducer nominal range should be at least 115÷120 % of the maximum regulated pressure/force.

Proportional controls for axial piston pumps

pressure, flow or p/Q controls

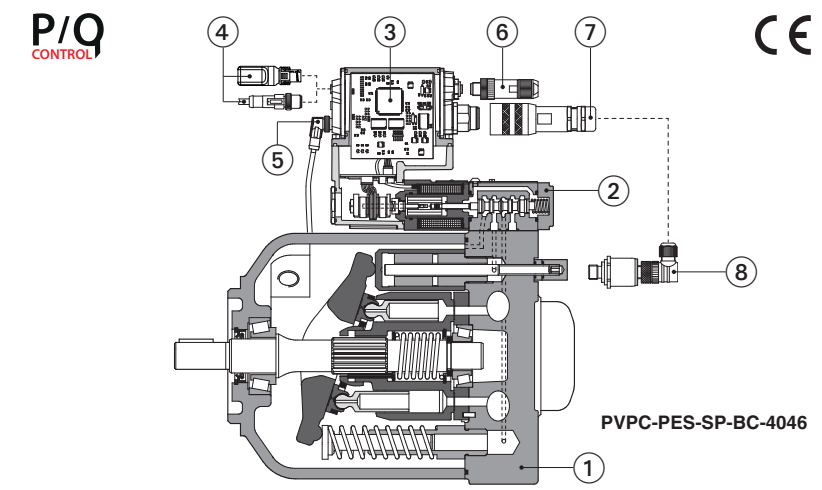

① Pump body
② Proportional valve
③ On-board driver with p/Q control
④ Bluetooth/USB connection
⑤ Swash plates transducer connection
⑥ Fieldbus connector
⑦ Main connector
⑧ Remote pressure transducer

PVPC

Variable displacement axial piston pumps with swash plate design suited for high pressure open circuits, they are provided with advanced electrohydraulic proportional controls:

- **CZ** open loop pressure control
- **LQZ** open loop flow control (load sensing)
- **PES** closed loop p/Q control

PES performs alternate closed loop controls of pressure, flow and max power limitation. It is also available with optional sequence module (PERS versions) that allows to reduce close to zero the pressure to the delivery line.

SAE J744 mounting flange and shaft.

Max displacement (cm³/rev)	**Max pressure working** (bar)	**Max pressure peak** (bar)
29, 46, 73, 140	280	350
88	250	315

For technical characteristics and features, see tech table A160.

1 MODEL CODE

PVPC | **X2E** - **PERS-SP** - **BC** - **4046** / * / **1** **D** / * * / *

PVPC: Variable displacement axial piston pump

Option for pumps with through shaft (1):
XA = intermediate flange SAE A
XB = intermediate flange SAE B
XC = intermediate flange SAE C (only for size 5073 and 5090)

Additional suffix for double pumps:
X2E = with a fixed displacement pump type PFE (see tech table A005)

Type of control, see section 13 and 14:
CZ = proportional pressure control **(1)**
LQZ = proportional flow control (load sensing) **(1)**
PES-SP = closed loop integral digital p/Q driver
PERS-SP = as PES plus sequence module

Fieldbus interfaces, USB port always present **(2)**:
NP = Not present
BC = CANopen
BP = PROFIBUS DP
EH = EtherCAT
EW = POWERLINK
EI = EtherNet/IP
EP = PROFINET RT/IRT

Size and max displacement (3):
3029 = size 3 - displacement 029 cm³/rev
4046 = size 4 - displacement 046 cm³/rev
5073 = size 5 - displacement 073 cm³/rev
5090 = size 5 - displacement 090 cm³/rev
6140 = size 6 - displacement 140 cm³/rev

Pressure setting, only for PERS: **200** = 200 bar **250** = 250 bar **280** = 280 bar

Series number

Seals material, see section 9 :
- = NBR
PE = FKM

Coil voltage, for CZ, LQZ - see section 18:
18 = optional coil for low current drivers

Electronic options, for PES and PERS **(4):**
C = current feedback for pressure transducer 4÷20 mA
I = current reference input and monitor 4÷20 mA
X = on-board pressure transducer with pre-configured pressure settings (only for PERS)
S = with 2 on-off inputs for multiple pressure PID selection for NP execution or double power supply for fieldbus execution, plus dedicated connector for remote pressure transducer

Direction of rotation, viewed at the shaft end: see section 23:
D = clockwise **S** = counterclockwise

Shaft, SAE Standard **(5)**:
1 = keyed **5** = splined

(1) Not available for PVPC-*-6140
(2) Only for PES and PERS
(3) Optional intermediate displacements 35 and 53 cm³/rev are available on request
(4) For possible combined options, see section 17
(5) Pumps with ISO 3019/2 mounting flange and shaft (option /M) are available on request

2 OFF-BOARD ELECTRONIC DRIVERS - only for **CZ**, **LQZ**

Drivers model	E-MI-AC-01F		E-MI-AS-IR		E-BM-AS-PS		E-BM-AES
Type	Analog		Digital				
Voltage supply (VDC)	12	24	12	24	12	24	24
Valve coil option	/6	std	/6	std	/6	std	std
Format	plug-in to solenoid				DIN-rail panel		
Tech table	G010		G020		G030		GS050

3 GENERAL NOTES

Atos digital proportionals pumps are CE marked according to the applicable directives (e.g. Immunity and Emission EMC Directive).
Installation, wirings and start-up procedures must be performed according to the general prescriptions shown in tech table **FS900** and in the user manuals included in the E-SW-SETUP programming software.

5 PUMP SETTINGS AND PROGRAMMING TOOLS - see tech. table **AS800**

Free downloadable software for PC allows to set all pump functional parameters and to access complete diagnostic information of digital drivers via Bluetooth/USB service port.
Atos E-SW-SETUP PC software supports all Atos digital pump drivers and it is available at www.atos.com in MyAtos area.

WARNING: axis card USB port is not isolated! For E-C-SB-USB/M12 cable, the use of E-A-SB-USB/OPT isolator adapter is highly recommended for PC protection

WARNING: for the list of countries where the Bluetooth adapter has been approved, see tech. table **AS800**

Bluetooth or USB connection

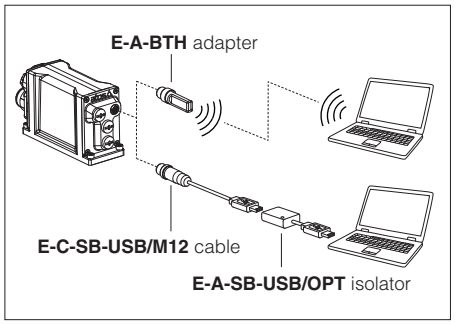

5 FIELDBUS - see tech. table **GS510**

Fieldbus allows valve direct communication with machine control unit for digital reference, valve diagnostics and settings. These execution allow to operate the valves through fieldbus or analog signals available on the main connector.

6 GENERAL CHARACTERISTICS

Assembly position	Any position. The drain port must be on the top of the pump. Drain line must be separated and unrestricted to the reservoir and extended below the oil level as far from the inlet as possible. Suggested maximum line length is 3 m.
Subplate surface finishing to ISO 4401	Acceptable roughness index: Ra ≤ 0,8, recommended Ra 0,4 – Flatness ratio 0,01/100
MTTFd valves according to EN ISO 13849	150 years, for further details see technical table P007
Ambient temperature range	**CZ,LQZ:** **Standard** = -25°C ÷ +60°C **/PE** option = -15°C ÷ +80°C **PES, PERS:** **Standard** = -20°C ÷ +60°C **/PE** option = -20°C ÷ +60°C
Storage temperature range	**CZ,LQZ:** **Standard** = -20°C ÷ +80°C **/PE** option = -20°C ÷ +80°C **PES, PERS:** **Standard** = -20°C ÷ +70°C **/PE** option = -20°C ÷ +70°C
Surface protection (pump body)	Black painting RAL 9005
Surface protection (pilot valve)	Zinc coating with black passivation, galvanic treatment (driver housing)
Corrosion resistance (pilot valve)	Salt spray test (EN ISO 9227) > 200 h
Vibration resistance	See technical table G004
Compliance (proportional pilot valve)	CE according to EMC directive 2014/30/EU (Immunity: EN 61000-6-2; Emission: EN 61000-6-3) RoHS Directive 2011/65/EU as last update by 2015/863/EU REACH Regulation (EC) n°1907/2006)

7 HYDRAULIC CHARACTERISTICS - based on mineral oil ISO VG 46 at 50 °C

PVPC size		**3029**		**4046**		**5073**		**5090**		**6140**	
Max displacement	(cm^3/rev)	29		46		73		88		140	
Theoretical max flow at 1450 rpm	(l/min)	42		66,7		105,8		127,6		203	
Max pressure working / peak	(bar)	280 / 350		280 / 350		280 / 350		250 / 315		280 / 350 **(1)**	
Min/Max inlet pressure	(bar abs.)	0,8 / 25		0,8 / 25		0,8 / 25		0,8 / 25		0,8 / 25	
Max pressure on drain port	(bar abs.)	1,5		1,5		1,5		1,5		1,5	
Power consumption at 1450 rpm and at max pressure and displacement	(Kw)	19,9		31,6		50,1		54,1		122	
Max torque on the first shaft	(Nm)	Type 1 210	Type 5 270	Type 1 350	Type 5 440	Type 1 670	Type 5 810	Type 1 670	Type 5 810	Type 1 1300	Type 5 1660
Max torque at max working pressure	(Nm)	128		203		328		350		780	
Speed rating	(rpm)	500 ÷ 3000		500 ÷ 2600		500 ÷ 2600		500 ÷ 2200		500 ÷ 2200	
Body volume	(l)	0,7		0,9		1,5		1,5		2,8	

(1) The maximum pressure can be increased to 350 bar (working) and 420 bar (peak) after detailed analysis of the application and of the pump working cycle

8 ELECTRICAL CHARACTERISTICS

Power supplies	Nominal : +24 VDC Rectified and filtered : VRMS = 20 ÷ 32 VMAX (ripple max 10 % VPP)			
Max power consumption	**CZ**, **LQZ** = 35 Watt; **PES**, **PERS** = 50 Watt			
Max. solenoid current	2,6 A for standard **12 VDC** coil; 1,5 A for standard **18 VDC** coil (only for CZ, LQZ)			
Coil resistance R at 20°C	**Size 3**: 3 ÷ 3,3 Ω for standard **12 VDC** coil; 13 ÷ 13,4 Ω for **18 VDC** coil (only for version CZ, LQZ)			
	Size 4, 5: 3,8 ÷ 4,1 Ω for standard **12 VDC** coil; 12 ÷ 12,5 Ω for **18 VDC** coil (only for version CZ, LQZ)			
Analog input signals	Voltage: range ±10 VDC (24 VMAX tolerant) Input impedance: Ri > 50 kΩ Current: range ±20 mA Input impedance: Ri = 500 Ω			
Monitor outputs	Output range: voltage ±10 VDC @ max 5 mA current ±20 mA @ max 500 Ω load resistance			
Enable input	Range: 0 ÷ 5 VDC (OFF state), 9 ÷ 24 VDC (ON state), 5 ÷ 9 VDC (not accepted); Input impedance: Ri > 10 kΩ			
Fault output	Output range: 0 ÷ 24 VDC (ON state > [power supply - 2 V] ; OFF state < 1 V) @ max 50 mA; external negative voltage not allowed (e.g. due to inductive loads)			
Pressure transducer power supply	+24VDC @ max 100 mA (E-ATR-8 see tech table **GS465**)			
Alarms	Solenoid not connected/short circuit, cable break with current reference signal, over/under temperature, valve spool transducer malfunctions, alarms history storage function			
Insulation class	H (180°) Due to the occurring surface temperatures of the solenoid coils, the European standards ISO 13732-1 and EN982 must be taken into account			
Protection degree to DIN EN60529	**CZ, LQZ** = IP65; **PES, PERS** = IP66/67 with mating connector			
Duty factor	Continuous rating (ED=100%)			
Tropicalization	Tropical coating on electronics PCB			
Additional characteristics	Short circuit protection of solenoid's current supply; 3 leds for diagnostic; spool position control by P.I.D. with rapid solenoid switching; protection against reverse polarity of power supply			
Communication interface	USB Atos ASCII coding	CANopen EN50325-4 + DS408	PROFIBUS DP EN50170-2/IEC61158	EtherCAT, POWERLINK, EtherNet/IP, PROFINET IO RT / IRT EC 61158
Communication physical layer	not insulated USB 2.0 + USB OTG	optical insulated CAN ISO11898	optical insulated RS485	Fast Ethernet, insulated 100 Base TX
Recommended wiring cable	LiYCY shielded cables, see section 22			

Note: a maximum time of 800 ms (depending on communication type) has to be considered between the driver energizing with the 24 VDC power supply and when the valve is ready to operate. During this time the current to the valve coils is switched to zero.

9 SEALS AND HYDRAULIC FLUIDS - for other fluids not included in below table, consult our technical office

Seals, recommended fluid temperature		NBR seals (standard) = -20°C ÷ +60°C, with HFC hydraulic fluids = -20°C ÷ +50°C FKM seals (/PE option) = -20°C ÷ +80°C		
Recommended viscosity		20÷100 mm²/s - max allowed range 15 ÷ 380 mm²/s		
Max fluid contamination level	normal operation	ISO4406 class 18/16/13 NAS1638 class 7		see also filter section at www.atos.com or KTF catalog
	longer life	ISO4406 class 16/14/11 NAS1638 class 5		
Hydraulic fluid		**Suitable seals type**	**Classification**	**Ref. Standard**
Mineral oils		NBR, FKM, HNBR	HL, HLP, HLPD, HVLP, HVLPD	DIN 51524
Flame resistant without water		FKM	HFDU, HFDR **(1)**	ISO 12922
Flame resistant with water		NBR, HNBR	HFC **(1)**	

(1) See section 10

10 PERFORMACE RESTRICTIONS WITH FLAME RESISTANT FLUIDS

10.1 HFDU and HFDR - Phosphate ester

PVPC size		**3029**	**4046**	**5073**	**5090**	**6140**
Max pressure working / peak	(bar)	200 / 240				**(2)**
Max speed	**(1)** (rpm @ VMAX)	2050	1850	1700	1550	
Ambient temperature range	(°C)	-10 ÷ +80				
Bearing life (% of bearing life with mineral oil)	(%)	90				

(1) With an inlet pressure of 1 bar abs
(2) For information about size 6140, contact Atos technical office

10.2 HFC - Water-glycol (35 ÷ 55 % of water)

PVPC size		**3029**	**4046**	**5073**	**5090**	**6140**
Max pressure working / peak	(bar)	180 / 210				**(2)**
Max speed	**(1)** (rpm @ VMAX)	2050	1850	1700	1550	
Ambient temperature range	(°C)	-10 ÷ +60				
Bearing life (% of bearing life with mineral oil)	(%)	40				

(1) With an inlet pressure of 1 bar abs
(2) For information about size 6140, contact Atos technical office

11 MAX PERMESSIBLE LOAD ON DRIVE SHAFT

PVPC size			**3029**	**4046**	**5073**	**5090**	**6140**
F_{ax} = axial load	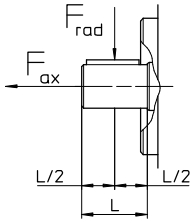	N	1000	1500	2000	2000	2000
F_{rad} = radial load		N	1500	1500	3000	3000	3000

12 VARIATION OF MAX SPEED VS INLET PRESSURE

Inlet pressure	**Displacement %**					
bar abs.	65	70	80	90	100	
0,8	120	115	105	97	90	**% variation of the max. speed**
0,9	120	120	110	103	95	
1,0	120	120	115	107	100	
1,2	120	120	120	113	106	
1,4	120	120	120	120	112	
1,6	120	120	120	120	117	
2,0	120	120	120	120	120	

Example
Displacement: 80% - Inlet pressure: 1,0 bar - Speed: 115%

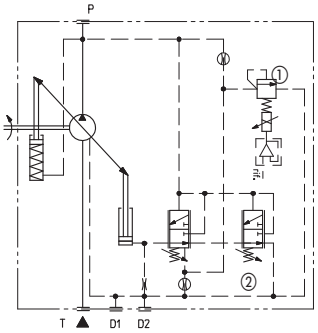

CZ

Proportional pressure control

Open loop control of the pump max pressure
The pumps displacement, and thus the flow, remains constant as far the pressure in the circuit reaches the value set on the proportional pilot valve ①, then the flow is reduced to maintain the circuit pressure to the value set by the electronic reference signal to the proportional valve. In this conditions the pressure in the circuit can be continuosly modulated by means of the reference signal.
Proportional pressure setting range: see below pressure control diagram.
Compensator setting range ②: 20÷350 bar (315 bar for 090)
Compensator factory setting ②: 280 bar (250 bar for 090)

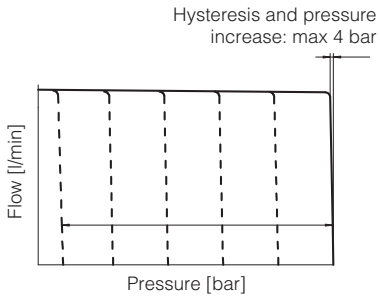

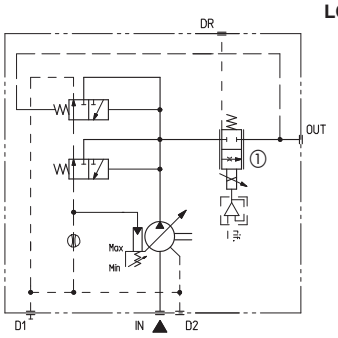

LQZ

Proportional flow (load-sensing)

Open loop control of the pump flow independent to the cyrcuit load. The pump displacement is self adjusted to maintain a costant pressure drop across the proportional flow control valve ①.
The pump flow can be continuosly regulated by modulating the proportional valve ①.

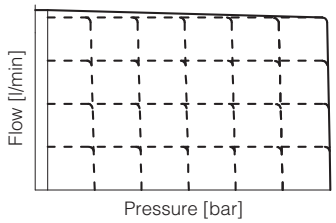

Diagrams for CZ, LQZ

Regulation diagrams
1 = Flow control
2 = Pressure control

(1) for standard 12 VDC coil
(2) for 18 VDC coil

Pump size
88 73 46 29 cm³/rev

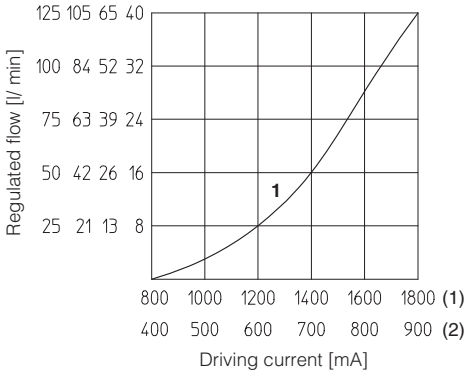

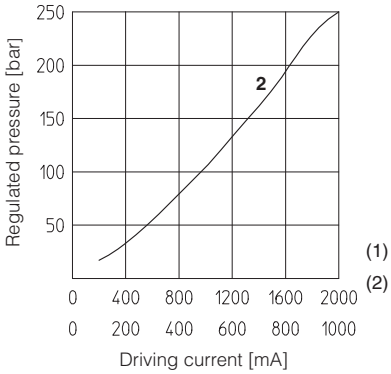

14 p/Q CONTROL

Pressure transducer not included

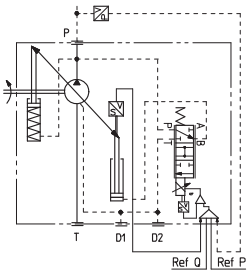

Pressure transducer included only for PERS/X

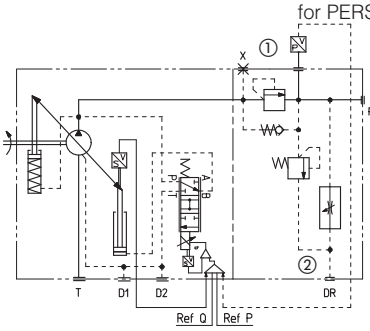

p/Q control integrates the alternate pressure and flow regulation with the electronic max power limitation.
A remote pressure transducer must be installed on the system and its feedback has to be interfaced to the pump on-board digital driver.
Flow control is active when the actual system pressure is lower than the pressure reference input signal: the pump flow is regulated according to the flow reference input.
Pressure control is activated when the actual pressure grows up to the pressure reference input signal: the pump flow is then reduced in order to regulate and limit the max system pressure (if the pressure tends to decrease under its command value, the flow control returns active). This option allows to realize accurate dynamic pressure profiles.

Following fieldbus interfaces are available:
- BC - CANopen interface
- BP - PROFIBUS DP interface
- EH - EtherCAT interface
- EW - POWRELINK interface
- EI - EtherNet/IP interface
- EP - PROFINET RT/IRT interface

The pumps with BC, BP, EH, EW, EI and EP interfaces can be integrated into a fieldbus communication network and thus digitally operated by the machine control unit.
The digital control ensures high performances as flow and pressure linearity (see diagram 1), better flow knee (see diagram 2), internal leakage compensation (controlled flow independent to the load variations).

PVPC-PES basic version, without sequence module and without pressure transducer, which has to be installed on the main line and wired to the 12 poles connector of the pump on-board digital driver.

PVPC-PERS version with sequence module RESC ② which grant a minimum piloting pressure (18 bar) when the actual pressure falls below that value. Without pressure transducer.

PVPC-PERS/X as PERS version plus integral pressure transducer, with output signal 4÷20 mA, factory wired to the pump on-board digital driver through a cable gland.

Response time

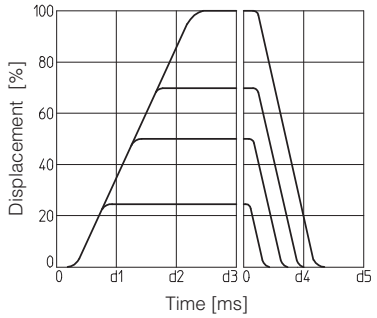

Regulated flow

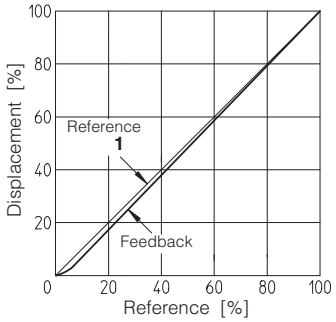

p/Q control

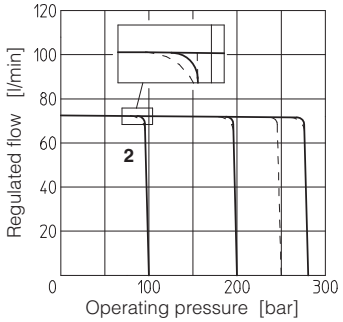

Type pump	d1	d2	d3	d4	d5
	[ms]				
PVPC-PE(R)S-3029	30	60	90	30	60
PVPC-PE(R)S-4046	40	80	120	40	80
PVPC-PE(R)S-5073	50	100	150	50	100
PVPC-PE(R)S-5090	60	120	170	60	120
PVPC-PE(R)S-6140	90	180	200	90	180

Response time of displacement variation for a step change of the electronic reference signal.

15 PRESSURE TRANSDUCER SELECTION

The pressure transducer type E-ATR-8 must be ordered separately (see tech table **GS465**)
For /X option the pressure transducer with output signal 4 ÷ 20 mA is on-board to the pump.

Pump code:	**Pressure transducer code:**
PVPC-PE(R)S-*/200	E-ATR-8/250
PVPC-PE(R)S-*/250	E-ATR-8/400
PVPC-PE(R)S-*/280	E-ATR-8/400
PVPC-PE(R)S-*/200/*/C	E-ATR-8/250/I
PVPC-PE(R)S-*/250/*/C	E-ATR-8/400/I
PVPC-PE(R)S-*/280/*/C	E-ATR-8/400/I

16 ELECTRONIC OPTIONS - only for **PES** and **PERS**

I = This option provides 4 ÷ 20 mA current reference and monitor signals, instead of the standard 0 ÷ 10 VDC.
Input signal can be reconfigured via software selecting between voltage and current, within a maximum range of ±10 VDC or ±20 mA.
It is normally used in case of long distance between the machine control unit and the valve or where the reference signal can be affected by electrical noise; the valve functioning is disabled in case of reference signal cable breakage.

C = This option is available to connect pressure transducers with 4 ÷ 20 mA current output signal, instead of the standard 0 ÷ 10 VDC.
Input signal can be reconfigured via software selecting between voltage and current, within a maximum range of ±10 VDC or ±20 mA.

X = This option providing the presence of the pressure transducer, with output signal 4÷20 mA, integral to the pump and factory wired to the PES electronics through a cable gland (see 19.10).

S = Two on-off input signals are available on the main connector to select one of the four pressure PID parameters setting, stored into the driver (see 19.11).

17 POSSIBLE COMBINED OPTIONS

for **PES**:	for **PERS**:
/CI, /CS, /IS, /CIS	/CI, /CS, /IS, /IX, /SX, /CIS, /ISX

18 COIL VOLTAGE OPTION - only for **CZ** and **LQZ**

18 = Optional coil to be used with electronic drivers not supplied by Atos, with power supply 24 VDC and with max current limited to 1A.

19 POWER SUPPLY AND SIGNALS SPECIFICATIONS - only for **PES** and **PERS**

Generic electrical output signals of the pump (e.g. fault or monitor signals) must not be directly used to activate safety functions, like to switch-ON/OFF the machine's safety components, as prescribed by the European standards (Safety requirements of fluid technology systems and components-hydraulics, ISO 4413).

19.1 Power supply (V+ and V0)

The power supply must be appropriately stabilized or rectified and filtered: apply at least a 10000 μF/40 V capacitance to single phase rectifiers or a 4700 μF/40 V capacitance to three phase rectifiers. In case of separate power supply see 19.2.

⚠ A safety fuse is required in series to each power supply: 2,5 A time lag fuse.

19.2 Power supply for driver's logic and communication (VL+ and VL0) - only for **/S** and **/SX** options for fieldbus executions

The power supply for driver's logic and communication must be appropriately stabilized or rectified and filtered: apply at least a 10000 μF/40 V capacitance to single phase rectifiers or a 4700 μF/40 V capacitance to three phase rectifiers.
The separate power supply for driver's logic on pin 9 and 10, allow to remove solenoid power supply from pin 1 and 2 maintaining active the diagnostics, USB and fieldbus communications.

⚠ A safety fuse is required in series to each driver's logic and communication power supply: 500 mA fast fuse.

19.3 Flow reference input signal (Q_INPUT+)

Functionality of Q_INPUT+ signal, is used as reference for the pump's flow.
Reference input signal is factory preset according to selected valve code, defaults are 0 ÷ 10VDC for standard and 4 ÷ 20 mA for /I option.
Input signal can be reconfigured via software selecting between voltage and current, within a maximum range of ±10 VDC or ± 20 mA.
Drivers with fieldbus interface can be software set to receive reference signal directly from the machine control unit (fieldbus reference). Analog reference input signal can be used as on-off commands with input range 0 ÷ 24VDC.

19.4 Pressure reference input signal (P_INPUT+)

Functionality of P_INPUT+ signal, is used as reference for the driver pressure closed loop.
Reference input signal is factory preset according to selected valve code, defaults are 0 ÷ 10VDC for standard and 4 ÷ 20 mA for /I option.
Input signal can be reconfigured via software selecting between voltage and current, within a maximum range of ±10 VDC or ± 20 mA.
Drivers with fieldbus interface can be software set to receive reference signal directly by the machine control unit (fieldbus reference).
Analog reference input signal can be used as on-off commands with input range 0 ÷ 24VDC.

19.5 Flow monitor output signal (Q_MONITOR)

The driver generates an analog output signal proportional to the actual pump swashplate position; the monitor output signal can be software set to show other signals available in the driver (e.g. analog reference, fieldbus reference, pilot spool position).
Monitor output signal is factory preset according to selected pump code, defaults are 0 ÷ 10VDC for standard and 4 ÷ 20 mA for /I option.
Output signal can be reconfigured via software selecting between voltage and current, within a maximum range of ±10 VDC or ± 20 mA.

19.6 Pressure monitor output signal (P_MONITOR)

The driver generates an analog output signal proportional to alternated pressure/force control; the monitor output signal can be software set to show other signals available in the driver (e.g. analog reference, force reference).
Monitor output signal is factory preset according to selected pump code, defaults are 0 ÷ 10VDC for standard and 4 ÷ 20 mA for /I option.
Output signal can be reconfigured via software selecting between voltage and current, within a maximum range of ±10 VDC or ± 20 mA.

19.7 Enable input signal (ENABLE) - only for **/S** and **/SX** options

To enable the driver, supply a 24 VDC on pin 3 (pin C): Enable input signal allows to enable/disable the current supply to the solenoid, without removing the electrical power supply to the driver; it is used to active the communication and the other driver functions when the valve must be disabled for safety reasons. This condition **does not comply** with norms IEC 61508 and ISO 13849.
Enable input signal can be used as generic digital input by software selection.

19.8 Fault output signal (FAULT)

Fault output signal indicates fault conditions of the driver (solenoid short circuits/not connected, reference signal cable broken for 4 ÷ 20 mA input, spool position transducer cable broken, etc.). Fault presence corresponds to 0 VDC, normal working corresponds to 24 VDC.
Fault status is not affected by the Enable input signal. Fault output signal can be used as digital output by software selection.

19.9 Pressure transducer input signal

Analog pressure transducers can be directly connected to the driver.
Analog input signal is factory preset according to selected pump code, defaults are 0 ÷ 10 VDC for standard and 4 ÷ 20 mA for /C option.
Input signal can be reconfigured via software selecting between voltage and current, within a maximum range of ±10 VDC or ± 20 mA.
Refer to the pump technical table to transducer characteristics to select the transducer's maximum pressure.
Standard:
Remote pressure transducer can be directly connected to the main connector on the driver (see 20.1)
/S option
Remote pressure transducer can be directly connected to a dedicated M12 connector (see 20.4)
/X and /SX options
Integral-to-pump transducer is directly connected with a dedicated M12 connector and no remote transducer is required;
current input signal (4 ÷ 20 mA) of the integral transducer allows cable break detection functionality

Standard	/S option	/X and /SX options
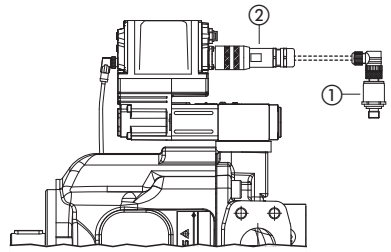	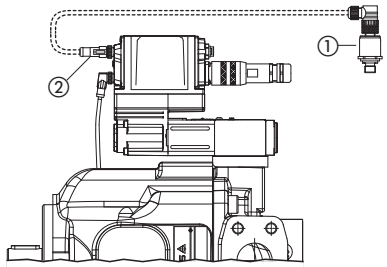	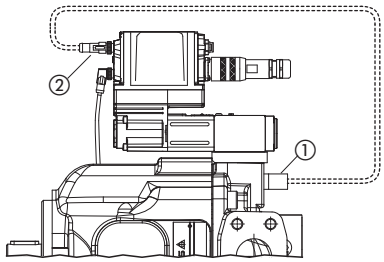
① = **remote transducer** ② = **main connector** Note: ① and ② to be ordered separately	① = **remote transducer** ② = **M12 connector** Note: ① and ② to be ordered separately	① = **integral transducer** ② = **M12 connector** Note: ① and ② included

19.10 Logic Input Signal (D_IN) - only for **standard** and **standard** with **/X** option

D_IN on-off input signal can be software set to perform one of the following functions:
- enable and disable the driver functioning; apply 0 VDC to disable and 24 VDC to enable the driver - see 19.7
- switch between two pressure PID settings; apply 0 VDC to select SET1 pressure PID and 24 VDC to select SET2 - see 19.11
- enable and disable the power limitation function; default setting, apply 0V to disable and 24VDC to enable the power limitation - see 19.13

19.11 Multiple PID selection (D_IN0 and D_IN1) - only for **/S** and **/SX** options in **NP** execution

Two on-off input signals are available on the main connector to select one of the four pressure PID parameters setting, stored into the driver.
Switching the active setting of pressure PID during the machine cycle allows to optimize the system dynamic response in different hydraulic working conditions (volume, flow, etc.).
Supply a 24 VDC or a 0 VDC on pin 9 and/or pin 10, to select one of the PID settings as indicated by binary code table at side. Gray code can be selected by software.

	PID SET SELECTION			
PIN	**SET 1**	**SET 2**	**SET 3**	**SET 4**
9	0	24 VDC	0	24 VDC
10	0	0	24 VDC	24 VDC

19.12 Multiple pressure PID (1)

Four sets for pressure PID parameters are stored into the driver: switching in real-time the active pressure PID parameters during machine cycle allows to optimize the system dynamic response in different hydraulic working conditions (volume, flow, etc.).
The available commands to switch these PID pressure sets depend on the driver execution:

Fieldbus	Driver	Commands
NP	Standard and Standard with /X option	1 on-off input on main connector allow to switch the 2 PID parameters (SET1 and SET2, see 4.10)
	/S and /SX options	2 on-off inputs allow to switch the 4 PID parameters set (SET1.. SET4 - see 4.11)
BC, BP, EH, EW, EI, EP	All versions	real-time fieldbus communication can switch between the 4 PID parameters set (SET1 - SET4 - see driver manuals)

19.13 Hydraulic Power Limitation (1)

A limit to the maximum pump's hydraulic power can be software set into the driver thus limiting the electric power consumption of the motor coupled to the pump: when the actual requested hydraulic power **p**x**Q** (pressure transducer feeback x flow reference value) reaches the max power limit (p1xQ1), the driver automatically reduces the flow pump regulation.

The higher is the pressure feedback the lower is the pumps's regulated flow:

$$\text{Flow regulation} = \text{Min}\left(\frac{\text{Power Limit [kW]}}{\text{Pressure Feedback [bar]}} \times \frac{1}{\text{Flow Full Scale [l/min]}}\ ;\ \text{Flow Reference}\right)$$

The hydraulic power limitation, disabled as default, can be enabled using the Atos pc software or the fieldbus communication (fieldbus executions).
Standard and standard with /X option allow also to enable and disable this function during the machine cycle, using the D_IN on-off input available on the main connector (see 19.11).

19.13 - Hydraulic Power Limitation

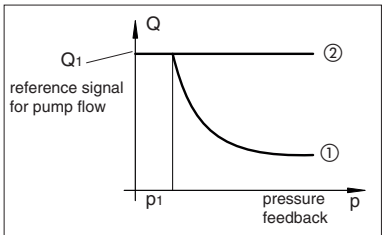

regulation curve ① with and ② without power limitation.
p1 x Q1 = max power limit

(1) The sections 19.12 and 19.13 are a brief description of the settings and features of digital drivers with alternated p/Q control. For a detailed descriptions of available settings, wirings and installation procedures, please refer to the user manual included in the E-SW-SETUP programming software:
E-MAN-RI-PES - user manual for **PES-S** digital drivers

20 ELECTRONIC CONNECTIONS

20.1 Main connector signals - 12 pin (A) Standard and Standard with /X option - for PES and PERS

PIN	Standard	/X	TECHNICAL SPECIFICATIONS	NOTES
1	**V+**		Power supply 24 VDC	Input - power supply
2	**V0**		Power supply 0 VDC	Gnd - power supply
3	**FAULT**		Fault (0 VDC) or normal working (24 VDC), referred to V0	Output - on/off signal
4	**INPUT-**		Negative reference input signal for Q_INPUT+ and P_INPUT+	Gnd - analog signal
5	**Q_INPUT+**		Flow reference input signal: ±10 VDC / ±20 mA maximum range Defaults are 0 ÷ 10 VDC for standard and 4 ÷ 20 mA for /I option	Input - analog signal **Software selectable**
6	**Q_MONITOR**		Flow monitor output signal: ±10 VDC / ±20 mA maximum range Defaults are 0 ÷ 10 VDC for standard and 4 ÷ 20 mA for /I option. Referred to V0	Output - analog signal **Software selectable**
7	**P_INPUT+**		Pressure reference input signal: ±10 VDC / ±20 mA maximum range Defaults are 0 ÷ 10 VDC for standard and 4 ÷ 20 mA for /I option	Input - analog signal **Software selectable**
8	**P_MONITOR**		Pressure monitor output signal: ±10 VDC / ±20 mA maximum range Defaults are 0 ÷ 10 VDC for standard and 4 ÷ 20 mA for /I option. Referred to V0	Output - analog signal **Software selectable**
9	**D_IN**		Function software selectable between: power limitation enable (default), multiple pressure PID selection or pump enable (24 VDC) / disable (0 VDC). Referred to V0	Input - on/off signal
10	**TR+**		Remote pressure transducer input signal: ±10 VDC / ±20 mA maximum range Defaults are 0 ÷ 10 VDC for standard and 4 ÷ 20 mA for /C option	Input - analog signal **Software selectable**
		NC	Do not connect	
11	**TR-**		Negative pressure transducer input signal for TR+	Input - analog signal
		NC	Do not connect	
PE	**EARTH**		Internally connected to driver housing	

Note: these connections are the same of Rexroth A10VSO axial piston pumps, model SYDFEE and SYDFEC

Remote pressure transducer connections - only for **Standard**

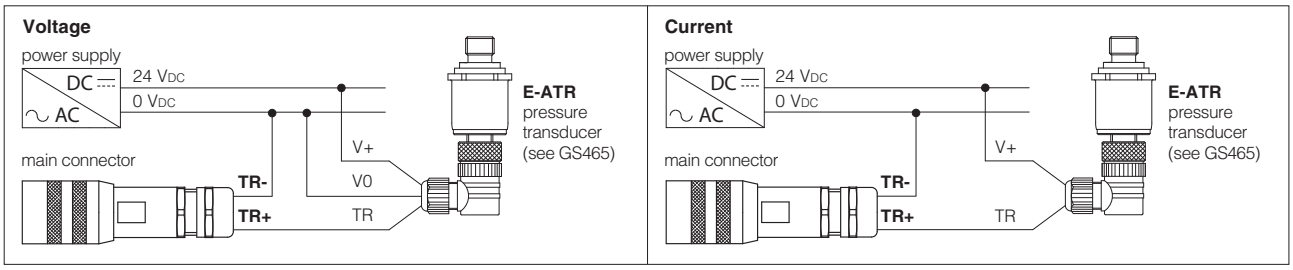

20.2 Main connector signals - 12 pin (A) /S and /SX option - for PES and PERS

PIN	/S and /SX NP	/S and /SX Fieldbus	TECHNICAL SPECIFICATIONS	NOTES
1	**V+**		Power supply 24 VDC	Input - power supply
2	**V0**		Power supply 0 VDC	Gnd - power supply
3	**ENABLE** referred to: V0	VL0	Enable (24 VDC) or disable (0 VDC) the pump	Input - on/off signal
4	**Q_INPUT+**		Flow reference input signal: ±10 VDC / ±20 mA maximum range Defaults are 0 ÷ 10 VDC for standard and 4 ÷ 20 mA for /I option	Input - analog signal **Software selectable**
5	**INPUT-**		Negative reference input signal for Q_INPUT+ and P_INPUT+	Input - analog signal
6	**Q_MONITOR** referred to: V0	VL0	Flow monitor output signal: ±10 VDC / ±20 mA maximum range Defaults are 0 ÷ 10 VDC for standard and 4 ÷ 20 mA for /I option	Output - analog signal **Software selectable**
7	**P_INPUT+**		Pressure reference input signal: ±10 VDC / ±20 mA maximum range Defaults are 0 ÷ 10 VDC for standard and 4 ÷ 20 mA for /I option	Input - analog signal **Software selectable**
8	**P_MONITOR** referred to: V0	VL0	Pressure monitor output signal: ±10 VDC / ±20 mA maximum range Defaults are 0 ÷ 10 VDC for standard and 4 ÷ 20 mA for /I option	Output - analog signal **Software selectable**
9	**D_IN0**		Function software selectable between: multiple pressure PID 0 selection (default) or power limitation enable. Referred to V0	Input - on/off signal
		VL+	Power supply 24 VDC for driver's logic and communication	Input - power supply
10	**D_IN1**		Function software selectable between: multiple pressure PID 1 selection (default) or power limitation enable. Referred to V0	Input - on/off supply
		VL0	Power supply 0 VDC for driver's logic and communication	Gnd - power supply
11	**FAULT** referred to: V0	VL0	Fault (0 VDC) or normal working (24 VDC)	Output - on/off signal
PE	**EARTH**		Internally connected to driver housing	

Notes: these connections are the same of Moog radial piston pumps, model RKP-D;
do not disconnect VL0 before VL+ when the driver is connected to PC USB port

20.3 Communications connectors - for **PES** and **PERS** (B) - (C)

(B) **USB connector - M12 - 5 pin** always present		
PIN	**SIGNAL**	**TECHNICAL SPECIFICATION** (1)
1	**+5V_USB**	Power supply
2	**ID**	Identification
3	**GND_USB**	Signal zero data line
4	**D-**	Data line -
5	**D+**	Data line +

(C1) (C2) **BC fieldbus execution, connector - M12 - 5 pin**		
PIN	**SIGNAL**	**TECHNICAL SPECIFICATION** (1)
1	**CAN_SHLD**	Shield
2	**not used**	(C1) - (C2) pass-through connection (2)
3	**CAN_GND**	Signal zero data line
4	**CAN_H**	Bus line (high)
5	**CAN_L**	Bus line (low)

(C1) (C2) **BP fieldbus execution, connector - M12 - 5 pin**		
PIN	**SIGNAL**	**TECHNICAL SPECIFICATION** (1)
1	**+5V**	Termination supply signal
2	**LINE-A**	Bus line (high)
3	**DGND**	Data line and termination signal zero
4	**LINE-B**	Bus line (low)
5	**SHIELD**	

(1) Shield connection on connector's housing is recommended

(C1) (C2) **EH, EW, EI, EP fieldbus execution, connector - M12 - 4 pin**		
PIN	**SIGNAL**	**TECHNICAL SPECIFICATION** (1)
1	**TX+**	Transmitter
2	**RX+**	Receiver
3	**TX-**	Transmitter
4	**RX-**	Receiver
Housing	**SHIELD**	

(2) Pin 2 can be fed with external +5V supply of CAN interface

20.4 Remote pressure/force transducer connector - M12 - 5 pin - for **PES** and **PERS** with for **/S, /X, /SX** options (D1) - (D2)

PIN	SIGNAL	TECHNICAL SPECIFICATION	NOTES	Voltage	Current
1	**VF +24V**	Power supply +24VDC	Output - power supply	Connect	Connect
2	**TR1**	Signal transducer: ±10 VDC / ±20 mA maximum range	Input - analog signal **Software selectable**	Connect	Connect
3	**AGND**	Common gnd for transducer power and signals	Common gnd	Connect	/
4	**NC**	Not connect		/	/
5	**NC**	Not connect		/	/

Remote pressure transducer connection - example

for **/S** option

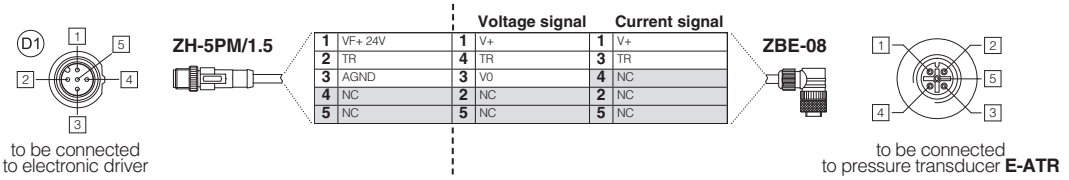

Note: connectors front view

20.5 Solenoid connection - for **CZ** and **LQZ**

PIN	SIGNAL	TECHNICAL SPECIFICATION	Connector code 666
1	**COIL**	Power supply	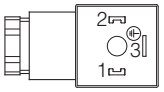
2	**COIL**	Power supply	
3	**GND**	Ground	

20.6 PES and PERS connections layout

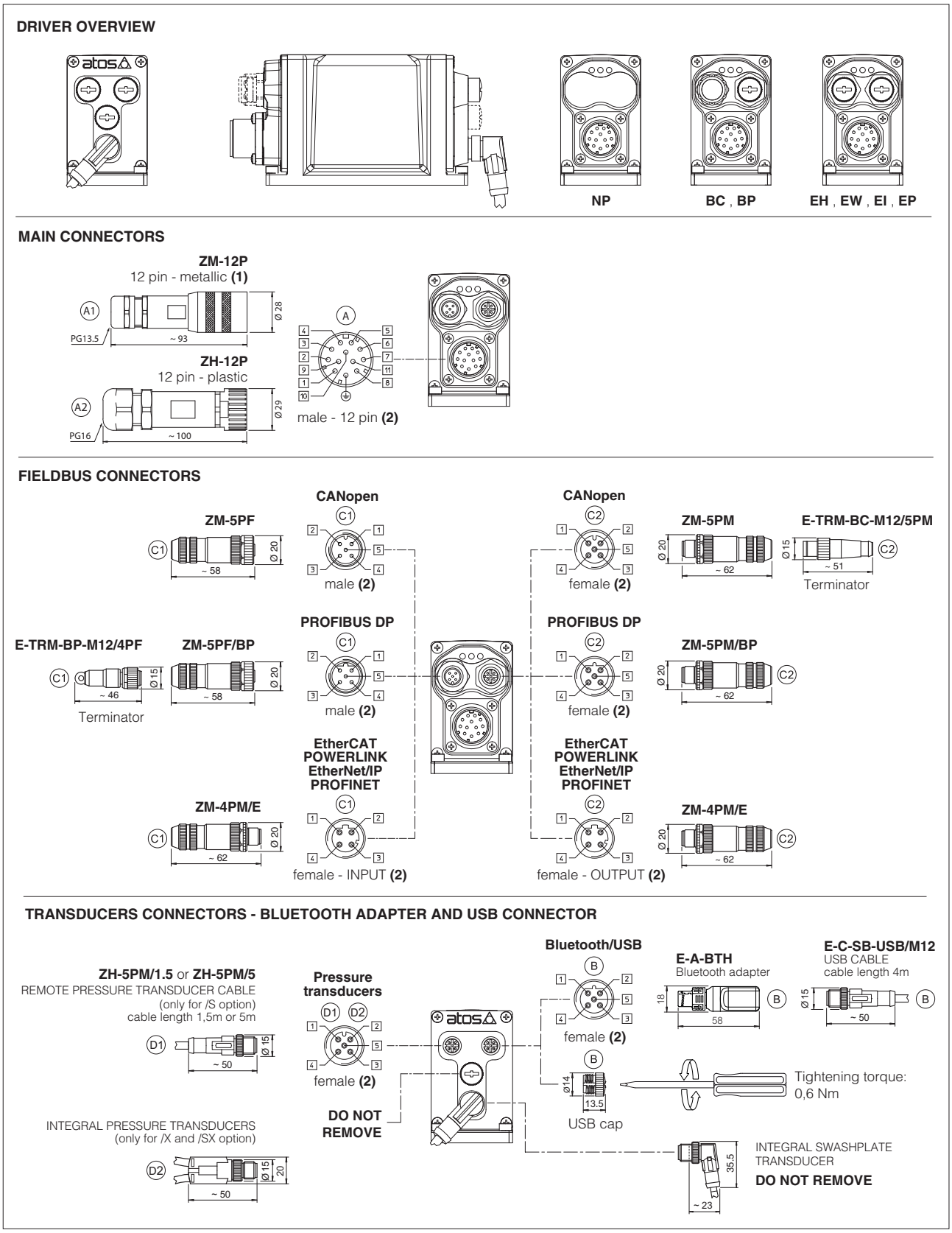

(1) Use of metallic connectors is strongly recommended in order to fulfill EMC requirements **(2)** Pin layout always referred to driver's view

20.7 Diagnostic LEDs (L)

Three leds show driver operative conditions for immediate basic diagnostics. Please refer to the driver user manual for detailed information.

FIELDBUS / LEDS	NP Not Present	BC CANopen	BP PROFIBUS DP	EH EtherCAT	EW POWERLINK	EI EtherNet/IP	EP PROFINET
L1	VALVE STATUS			LINK/ACT			
L2	NETWORK STATUS			NETWORK STATUS			
L3	SOLENOID STATUS			LINK/ACT			

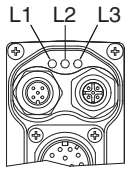

21 IN / OUT FIELDBUS COMMUNICATION CONNECTORS

Two fieldbus communication connectors are always available for digital driver executions BC, BP, EH, EW, EI, EP. This features allows considerable technical advantages in terms of installation simplicity, wirings reduction and also avoid the usage expensive T-connectors.
For BC and BP executions the fieldbus connectors have an internal pass-through connection and can be used like end point of the fieldbus network, using an external terminator (see tech table **AS800**).
For EH, EW, EI and EP execution the external terminators are not required: each connector is internally terminated.

BC and BP pass-through connection

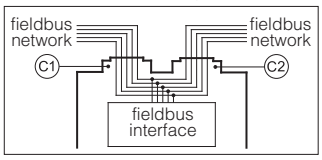

22 CONNECTORS CHARACTERISTICS - to be ordered separately

22.1 Main connectors

CONNECTOR TYPE	POWER SUPPLY AND SIGNALS	POWER SUPPLY AND SIGNALS
CODE	A1 ZM-12P	A2 ZH-12P
Type	12pin female straight circular	12pin female straight circular
Standard	DIN 43651	DIN 43651
Material	Metallic	Plastic reinforced with fiber glass
Cable gland	PG13,5	PG16
Recommended cable	LiYCY 12 x 0,75 mm² max 20 m (logic and power supply)	LiYCY 10 x 0,14mm² max 40 m (logic) LiYY 3 x 1mm² max 40 m (power supply)
Conductor size	0,5 mm² to 1,5 mm² - available for 12 wires	0,14 mm² to 0,5 mm² - available for 9 wires 0,5 mm² to 1,5 mm² - available for 3 wires
Connection type	to crimp	to crimp
Protection (EN 60529)	IP 67	IP 67

22.2 Fieldbus communication connectors

CONNECTOR TYPE	BC CANopen (1)		BP PROFIBUS DP (1)		EH EtherCAT, EW POWERLINK, EI EtherNet/IP, EP PROFINET (2)
CODE	C1 ZM-5PF	C2 ZM-5PM	C1 ZM-5PF/BP	C2 ZM-5PM/BP	C1 C2 ZM-4PM/E
Type	5 pin female straight circular	5 pin male straight circular	5 pin female straight circular	5 pin male straight circular	4 pin male straight circular
Standard	M12 coding A – IEC 61076-2-101		M12 coding B – IEC 61076-2-101		M12 coding D – IEC 61076-2-101
Material	Metallic		Metallic		Metallic
Cable gland	Pressure nut - cable diameter 6÷8 mm		Pressure nut - cable diameter 6÷8 mm		Pressure nut - cable diameter 4÷8 mm
Cable	CANbus Standard (DR 303-1)		PROFIBUS DP Standard		Ethernet standard CAT-5
Connection type	screw terminal		screw terminal		terminal block
Protection (EN 60529)	IP67		IP 67		IP 67

(1) E-TRM-** terminators can be ordered separately, see tech table **AS800**

(2) Internally terminated

22.3 Remote pressure transducer connectors

CONNECTOR TYPE	PRESSURE TRANSDUCER		SF - Double transducers
CODE	D1 D2 ZH-5PM/1.5	D1 D2 ZH-5PM/5	D2 ZH-5PM-2/2
Type	5 pin male straight circular		4 pin male straight circular
Standard	M12 coding A – IEC 61076-2-101		M12 coding A – IEC 61076-2-101
Material	Plastic		Plastic
Cable gland	Connector moulded on cables 1,5 m length	5 m length	Connector moulded on cables 2 m length
Cable	5 x 0,25 mm²		3 x 0,25 mm² (both cables)
Connection type	molded cable		splitting cable
Protection (EN 60529)	IP 67		IP 67

23 DIRECTION OF ROTATION

version D
clockwise rotation
viewed at the shaft end

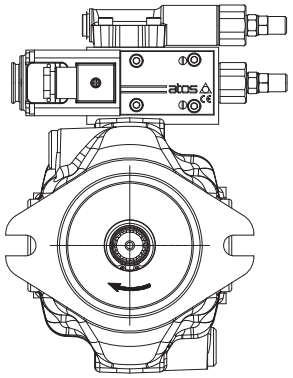

Pumps with clockwise rotation (**D**) have the IN and OUT as shown in all representation of catalogue

version S
counterclockwise rotation
viewed at the shaft end

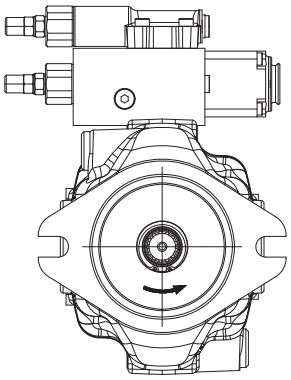

Pumps with counterclockwise rotation (**S**) have the IN and OUT inverted and consequently the position of the electrohydraulic proportional controls

24 INSTALLATION DIMENSION [mm]

24.1 Dimension of PVPC size 3, 4, 5 - version CZ, LQZ

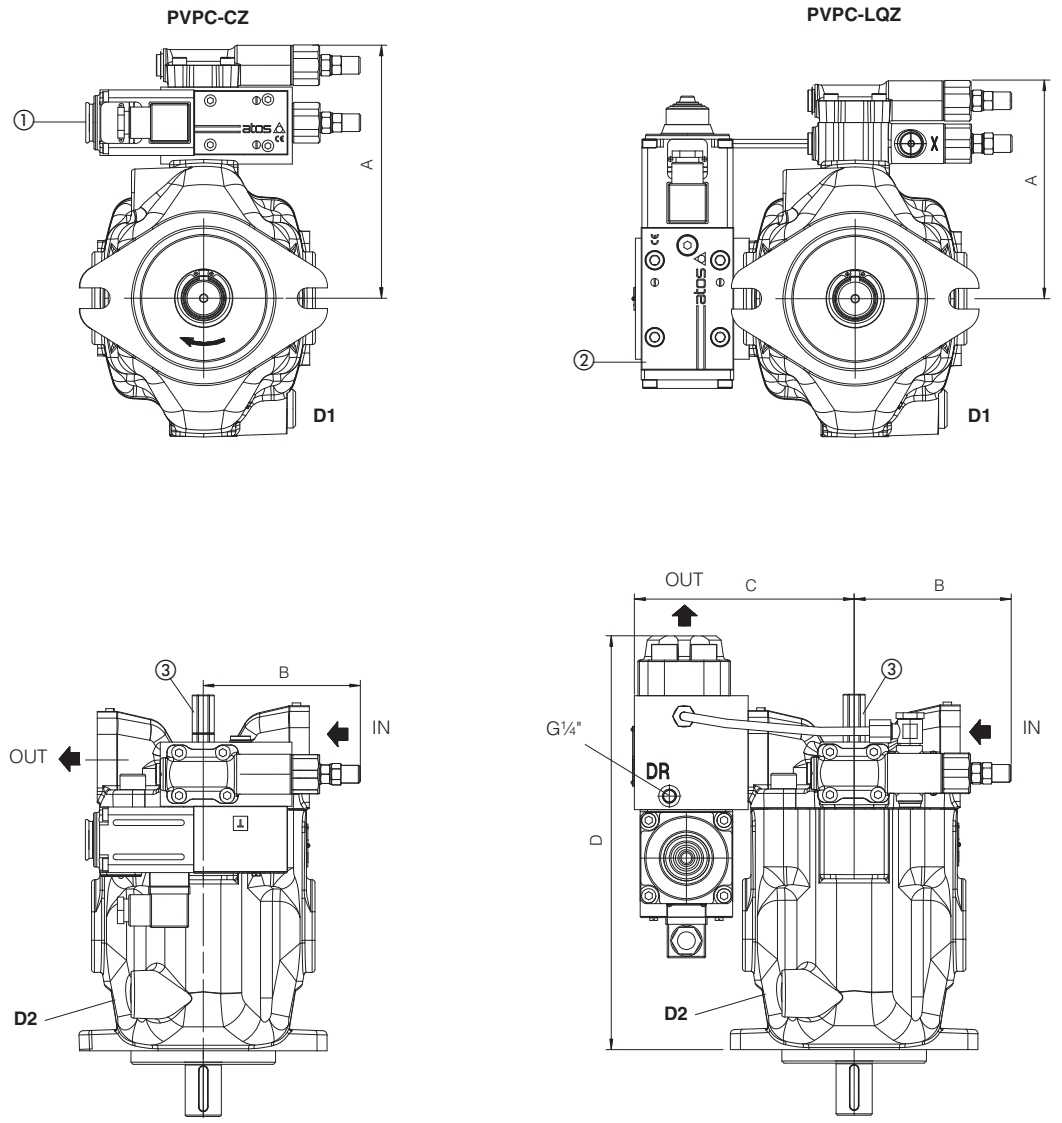

① = Proportional pressure control valve
② = Proportional flow control valve
③ = Regulation screw for max displacement. Adjustable range 50% to 100% of max displacement (not available for versions PES, PERS and PERS/X). In case of double pump the regulation screw is not always available, please contact our technical office.

Drawing shows pumps with clockwise rotation (option D): pumps with counterclockwise rotation (option S) will have inlet and outlet ports inverted and consequently also the position of the control devices.

Pump type	Version	A	B	C	D	IN	OUT	D1, D2	Mass (kg)
PVPC-*-3029	**CZ**	168	111	-	-	Flange SAE 3000 1 1/4”	Flange SAE 6000 3/4”	1/2” BSPP	22
	LQZ	144	111	132	257				24
PVPC-*-4046	**CZ**	177	111	-	-	Flange SAE 3000 1 1/2”	Flange SAE 6000 1”	1/2” BSPP	28
	LQZ	153	111	156	293				33,6
PVPC-*-5073 PVPC-*-5090	**CZ**	190	111	-	-	Flange SAE 3000 2”	Flange SAE 6000 1 1/4”	3/4” BSPP	36,9
	LQZ	166	111	163	328				44

24.2 Dimension of PVPC size 3, 4, 5 - version PES, PERS, PERS/X

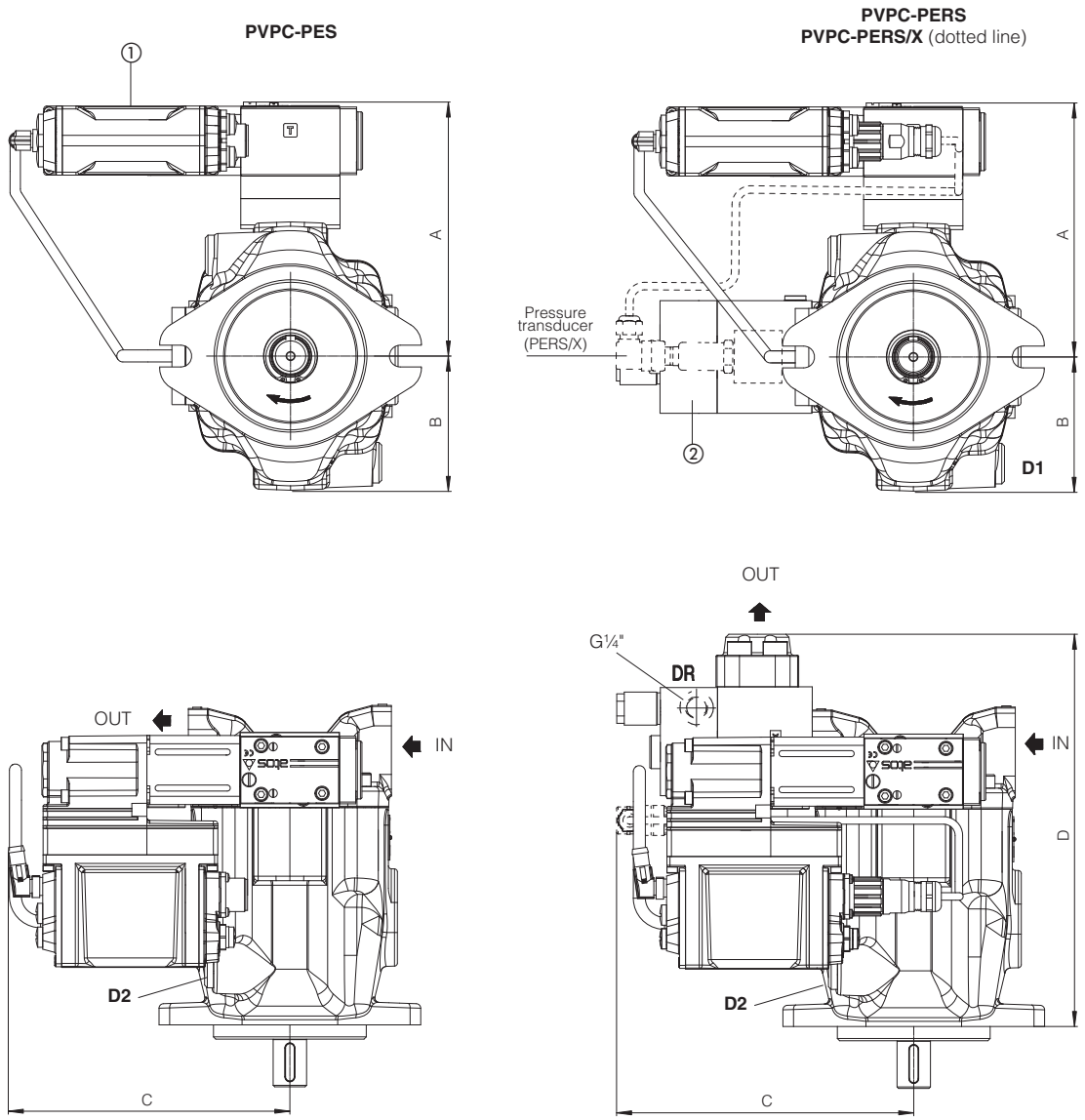

① = Proportional valve with on-board driver with p/Q control
② = Sequence module

Drawing shows pumps with clockwise rotation (option D): pumps with counterclockwise rotation (option S) will have inlet and outlet ports inverted and consequently also the position of the control devices.

Pump type	Version	A	B	C	D	IN	OUT	D1, D2	Mass (kg)
PVPC-*-3029	**PES**	170	103,5	190	-	Flange SAE 3000 1 1/4”	Flange SAE 6000 3/4”	1/2” BSPP	21,6
	PERS	170	103,5	200	262,5				26
	PERS/X	190	103,5	200	262,5				26,4
PVPC-*-4046	**PES**	178	103,5	190	-	Flange SAE 3000 1 1/2”	Flange SAE 6000 1”	1/2” BSPP	27,6
	PERS	178	103,5	220	299				33,7
	PERS/X	178	103,5	220	299				34,1
PVPC-*-5073 PVPC-*-5090	**PES**	190	103,5	190	-	Flange SAE 3000 2”	Flange SAE 6000 1 1/4”	3/4” BSPP	36,6
	PERS	190	103,5	230	337				46,7
	PERS/X	190	103,5	230	337				47,1

24.3 Dimension of PVPC size 6 - version PES, PERS, PERS/X

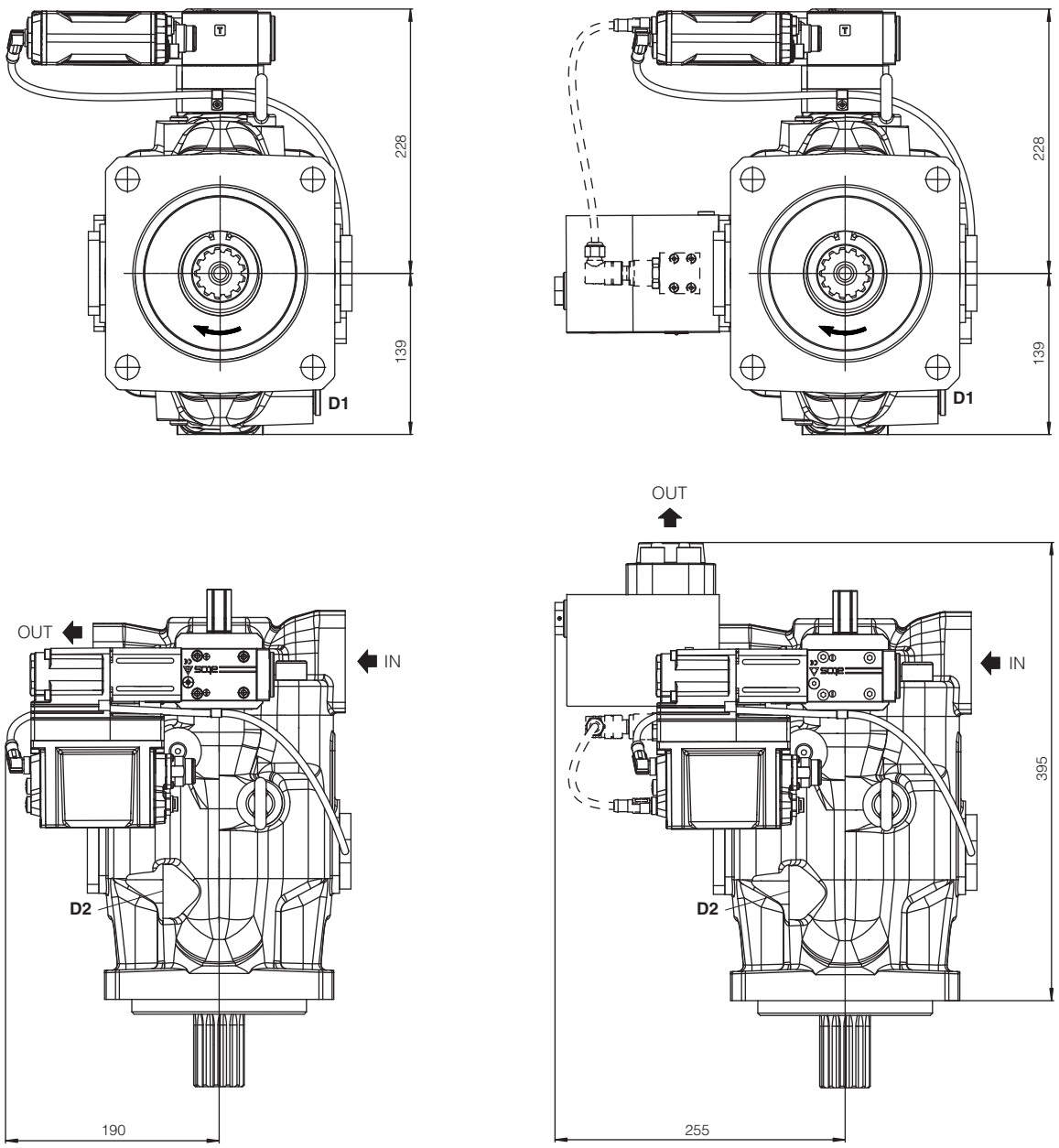

① = Proportional valve with on-board driver with p/Q control
② = Sequence module

Drawing shows pumps with clockwise rotation (option D): pumps with counterclockwise rotation (option S) will have inlet and outlet ports inverted and consequently also the position of the control devices.

Pump type	Version	IN	OUT	D1, D2	Mass (kg)
PVPC-*-6140	**PES**	Flange SAE 3000 2 1/2”	Flange SAE 6000 1 1/4”	1 1/16”-12UNF	72,7
	PERS				82,8
	PERS/X				83,2

25 RELATED DOCUMENTATION

A900 Operating and maintenance information for pumps
AS800 Programming tools
FS001 Basics for digital electrohydraulics
FS500 Digital proportional valves with p/Q control
FS900 Operating and maintenance information for proportional valves
G010 E-MI-AC analog driver
G020 E-MI-AS-IR digital driver
G030 E-BM-AS digital driver
GS050 E-BM-AES digital driver
GS510 Fieldbus
K800 Electric and electronic connectors
P005 Mounting surfaces for electrohydraulic valves
E-MAN-RI-PES PES user manual

3 ON-OFF VALVES

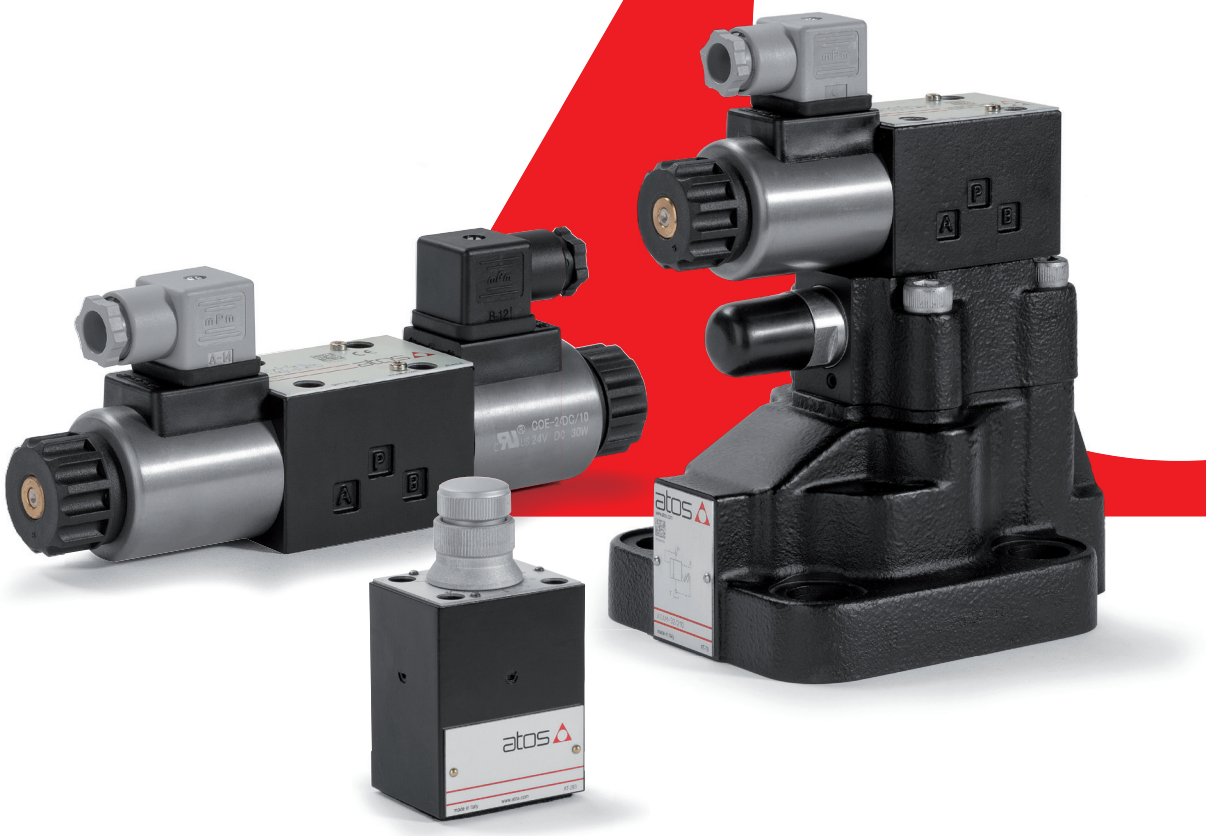

INDEX

ON-OFF VALVES

		Size	Qmax [l/min]	Table	Pag
TECHNICAL INFORMATION					
Basics for on-off solenoid directional valves				E001	934
Basics for safety components				Y010	936
Mounting surfaces for electrohydraulic valves				P005	958
Mounting surfaces and cavities for cartridge valves				P006	962
DIRECTIONAL VALVES					
solenoid operated					
DHL	direct, spool type, subplate, AC or DC solenoids, compact execution	06	60	E018	674
DHE	direct, spool type, subplate, AC or DC solenoids	06	80	E015	680
DHEP	direct, spool type, subplate, AC or DC solenoids, high pressure	06	80	E030	684
DKE	direct, spool type, subplate, AC or DC solenoids	10	150	E025	690
DKEP	direct, spool type, subplate, AC or DC solenoids, high pressure	10	150	E035	694
DPHL	piloted, spool type, subplate, AC or DC solenoids	10 ÷ 32	160 ÷ 1000	E100	700
DPHE	piloted, spool type, subplate, AC or DC solenoids	10 ÷ 32	160 ÷ 1000	E085	710
leak free, solenoid operated					
DLEH, DLEHM	direct, poppet type, subplate, AC or DC solenoids	06	12 ÷ 30	E045	720
CART LEH, CART LEHM	direct, poppet type, screw-in cartridge, AC or DC solenoids	M20			
JO-DL	piloted, poppet type, leak free screw-in cartridge, DC solenoids	UNF 3/4" ÷ 1 5/16"	40 ÷ 300	E105	724
mechanical, hydraulic, pneumatic operated					
DH, DK, DP mechanical	hand lever or cam operated, spool type, subplate	06 ÷ 25	50 ÷ 700	E150	728
DH, DK, DP hydraulic	spool type, subplate	06 ÷ 32	80 ÷ 1000	E225	734
DH, DK, DP pneumatic	spool type, subplate	06 ÷ 32	50 ÷ 1000	E255	739
PRESSURE VALVES					
CART M, CART ARE	relief, direct, screw-in cartridge	G1/2" ÷ M35	2,5 ÷ 120	C010	743
ARE	relief, direct, in line	G1/4" ÷ G1/2"	40 ÷ 100	C020	748
ARAM	relief, piloted, in line, optional AC or DC solenoids	G3/4" ÷ G1 1/4"	350 ÷ 500	C045	751
AGAM	relief, piloted, subplate, optional AC or DC solenoids	10 ÷ 32	200 ÷ 600	C066	756
REM	relief, piloted, flanged, optional AC or DC solenoids	SAE 3/4" ÷ 1 1/4"	200 ÷ 600	C073	762
AGIR	reducing, piloted, subplate	10 ÷ 32	160 ÷ 400		
AGIS	sequence, piloted, subplate	10 ÷ 32	200 ÷ 600	C070	768
AGIU	unloading, piloted, subplate, optional AC or DC solenoids	10 ÷ 32	100 ÷ 300		
FLOW VALVES					
QV	pressure compensated, 2 way, subplate	06	1,5 ÷ 24	C210	773
AQFR	throttle, in line	G3/8" ÷ 1 1/4"	30 ÷ 250	C280	775

		Size	Qmax [l/min]	Table	Pag
CHECK VALVES					
DB, DR	direct, screw-in cartridge	G1/4” ÷ G1/2”	25 ÷ 95	C400	777
ADR	direct, in line	G1/4” ÷ G1 1/4”	40 ÷ 500	C406	779
ADRL	piloted, in line	G3/8” ÷ G1 1/4”	30 ÷ 300	C450	781
AGRL	piloted, subplate	10 ÷ 32	160 ÷ 500		
SAFETY VALVES					
directionals, machine directive 2006/42/EC					
DHE/FV, DKE/FV DHE/FI, DKE/FI	direct, spool type, subplate, AC or DC solenoids	06 ÷ 10	80 ÷ 150	EY010	785
HF/FV	direct, spool type, modular, AC or DC solenoids	06	60	EY050	795
DPHE/FV	piloted, spool type, subplate, AC or DC solenoids	10 ÷ 25	160 ÷ 700	EY030	799
JO-DL/FV	piloted, poppet type, leak free screw-in cartridge, DC solenoids	UNF 3/4” ÷ 1 5/16”	40 ÷ 300	EY105	809
LIFI, LIDA/FI, LIDA/FV LIDAS/FI, LIDAS/FV	piloted, poppet type, ISO cartridge, optional AC or DC solenoids	16 ÷ 100	120 ÷ 6300	EY120	812
pressure relief, PED 2014/68/UE					
CART M/PED CART ARE/PED	direct, screw-in cartridge	G1/2” ÷ M35	2,5 ÷ 150	CY010	826
ARE/PED	direct, in line	G1/4” ÷ G1/2”	60 ÷ 100	CY020	830
ARAM/PED	piloted, in line, optional AC or DC solenoids	G3/4” ÷ G1 1/4”	400 ÷ 600	CY045	834
AGAM/PED	piloted, subplate, optional AC or DC solenoids	10 ÷ 32	200 ÷ 600	CY066	839
MODULAR VALVES					
directionals					
HF	direct, spool type, AC or DC solenoids	06	60	D050	845
pressure					
HMP, HM, KM	relief, direct or piloted, poppet type	06 ÷ 10	35 ÷ 120	D120	849
HS, KS	sequence, direct or piloted, spool type	06 ÷ 10	40 ÷ 80	D130	853
HG, KG, JPG	reducing, direct or piloted, spool type, 3 or 2 way	06 ÷ 25	50 ÷ 300	D140	855
HC, KC, JPC	compensator, direct or piloted, spool type, 2 way	06 ÷ 16	50 ÷ 200	D150	859
flow					
DHQ	pressure compensated flow with by-pass solenoid valve	06	40	D170	861
HQ, KQ, JPQ	throttle, reverse free flow	06 ÷ 25	80 ÷ 300	D160	865
check					
HR, KR, JPR	direct or piloted, poppet type	06 ÷ 25	60 ÷ 300	D180	869

NEXT

ISO CARTRIDGES		Size	Qmax [l/min]	Table	Pag
SC LI, SC LIR	2 way, slip-in, optional leak free execution	16 ÷ 100	270 ÷ 9000	H003	873
directionals					
LIDEW, LIDBH	functional covers, optional AC or DC solenoids	16 ÷ 100	270 ÷ 9000	H030	883
LIDAS, LIDASH	2 way, active piloting, optional AC or DC solenoids	16 ÷ 50	240 ÷ 2100	H050	889
pressure					
LIMM	relief, functional covers, optional AC or DC solenoids	16 ÷ 80	180 ÷ 4900		
LIRA	reducing, functional covers	16 ÷ 40	140 ÷ 750	H010	893
LIC	compensator, functional covers	16 ÷ 80	180 ÷ 4900		
flow					
LIDD	functional covers, throttle with stroke limiter	16 ÷ 63	270 ÷ 4000	H020	899
check					
LIDA	normally closed, functional covers	16 ÷ 100	270 ÷ 9000		
LIDO	normally open, functional covers	16 ÷ 50	160 ÷ 1800	H040	903
LIDB	normally closed, functional covers, shuttle valve	16 ÷ 63	270 ÷ 4000		
LIDR	normally closed, functional covers, check valve	16 ÷ 63	270 ÷ 4000		

ACCESSORIES			
E-ATR-8	pressure transducer with amplified analog output signal	GS465	912
E-DAP-2	electronic pressure switch with digital output signals and display	GS470	914
MAP	manual pressure switch with fixed differential switching pressure	D250	916
BA	single station subplates, mounting surfaces ISO 4401, 6264 and 5781	K280	918
HAND LEVERS	for on-off and proportional valves	E138	922
HANDWHEELS & KNOBS	for on-off and proportional valves	K150	924
CONNECTORS	for transducers, pumps, on-off and proportional valves	K800	926

OPERATING INFORMATION		
Operating and maintenance information for on-off valves	E900	976
Operating and maintenance information for safety PED pressure relief valves	CY900	982

Supplementary components range available on **www.atos.com**

Solenoid directional valves type DHL

direct, spool type, compact execution

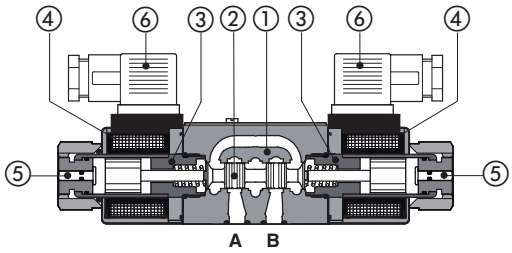

① Valve body
② Spool
③ Solenoid tube
④ Solenoid coil
⑤ Manual override pin
⑥ Electric connector (DIN43650) to be ordered separately

DHL-071*-DC

Spool type, 4/3, 4/2, 3/2 way version.
Wet type solenoids made by:
- screwed tube ③, different for AC and DC power supply
- interchangeable coils ④, specific for AC or DC power supply, easily replaceable without tools - see section 6 for available voltages

The valve body ① is 3 chamber type made by shell-moulding casting with wide internal passages ensuring low pressure drops.

Mounting surface: **ISO 4401 size 06**
Max flow: **60 l/min**
Max pressure: **350 bar**

1 MODEL CODE

DHL - 0	61	1	/	A	-	X	24 DC	*	/	*

DHL - 0: Solenoid directional valves size 06

61: Valve configuration, see section 2
61 = single solenoid, center plus external position, spring centered
63 = single solenoid, 2 external positions, spring offset
67 = single solenoid, center plus external position, spring offset
70 = double solenoid, 2 external positions, without springs
71 = double solenoid, 3 positions, spring centered
75 = double solenoid, 2 external positions, with detent

1: Spool type, see section 2

A: Options, see section 7

X:
00-AC = AC solenoids without coils
00-DC = DC solenoids without coils
X = without connector
See section 12 for available connectors, to be ordered separately
Coils with special connectors, see section 13
XK = Deutsch connector

24 DC: Voltage code, see section 6

*****: Series number

*****: Seals material, see section 14:
- = NBR
PE = FKM

2 CONFIGURATIONS and SPOOLS (representation according to ISO 1219-1)

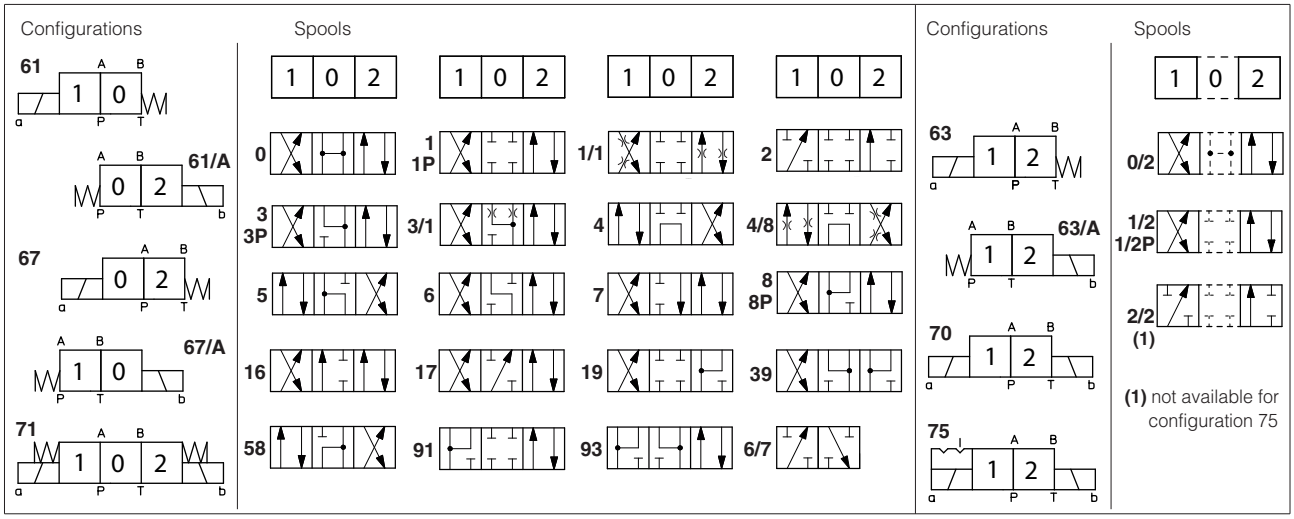

Note:
Spool type **6/7** is available only for configuration 61, not available for version /A
Spools type **0** and **3** are also available as **0/1** and **3/1** with restricted oil passages in central position, from user ports to tank
Spools type **1, 4**, **5** and **58** are also available as **1/1, 4/8, 5/1** and **58/1.** They are properly shaped to reduce water-hammer shocks during the swiching
Spools type **1, 1/2, 3, 8** are available as **1P, 1/2P, 3P, 8P** to limit valve internal leakages.

3 GENERAL CHARACTERISTICS

Assembly position	Any position
Subplate surface finishing to ISO 4401	Acceptable roughness index, Ra ≤0,8 recommended Ra 0,4 - flatness ratio 0,01/100
MTTFd valves according to EN ISO 13849	150 years, see technical table P007
Ambient temperature range	**Standard** = -30°C ÷ +70°C **/PE** option = -20°C ÷ +70°C
Storage temperature range	**Standard** = -30°C ÷ +80°C **/PE** option = -20°C ÷ +80°C
Surface protection	Body: zinc coating with black passivation Coil: zinc nickel coating (DC version) plastic incapsulation (AC version)
Corrosion resistance	Salt spray test (EN ISO 9227) > 200 h
Compliance	CE to Low Voltage Directive 2014/35/EU RoHS Directive 2011/65/EU as last update by 2015/863/EU REACH Regulation (EC) n°1907/2006

4 HYDRAULIC CHARACTERISTICS

Operating pressure	Ports P,A,B: **350** bar; Port T **210** bar for DC version; **160** bar for AC version
Max flow	**60 l/min**, see Q/Δp diagram at section 8 and operating limits at section 9

5 ELECTRICAL CHARACTERISTICS

Insulation class	**H** (180°C) for DC coils; **F** (155°C) for AC coils Due to the occuring surface temperatures of the solenoid coils, the European standards EN ISO 13732-1 and EN ISO 4413 must be taken into account
Protection degree to DIN EN 60529	**IP 65** (with connectors 666, 667 correctly assembled)
Relative duty factor	100%
Supply voltage and frequency	See section 6
Supply voltage tolerance	± 10%

6 COIL VOLTAGE

External supply nominal voltage ± 10%	**Voltage code**	Type of connector	Power consumption (2)	Code of spare coil DHL
12 DC	**12 DC**	666 or 667	29W	COL-12DC
14 DC	**14 DC**			COL-14DC
24 DC	**24 DC**			COL-24DC
28 DC	**28 DC**			COL-28DC
110 DC	**110 DC**			COL-110DC
220 DC	**220 DC**			COL-220DC
110/50 AC (1)	**110/50/60 AC**		58VA (3)	COL-110/50/60AC
115/60 AC	**115/60 AC**			COL-115/60AC
230/50 AC (1)	**230/50/60 AC**			COL-230/50/60AC
230/60 AC	**230/60 AC**			COL-230/60AC
110/50 AC - 120/60 AC	**110 DC**	669	29W	COL-110DC
230/50 AC - 230/60 AC	**220 DC**			COL-220DC

(1) Coil can be supplied also with 60 Hz of voltage frequency: in this case the performances are reduced by 10÷15% and the power consumption is 55 VA.

(2) Average values based on tests preformed at nominal hydraulic condition and ambient/coil temperature of 20°C.

(3) When solenoid is energized, the inrush current is approx 3 times the holding current. Inrush current values correspond to a power consumption of about 150 VA.

7 OPTIONS

A = Solenoid mounted at side of port B (only for single solenoid valves). In standard versions, solenoid is mounted at side of port A.

MV, MO = auxiliary hand lever positioned vertically (MV) or horizontally (MO). For available configuration and dimensions see section 18

WP = prolonged manual override protected by rubber cap.
Available for configuration: **61 - 63 - 71**, spools: **0 - 0/2 - 1 - 1P - 1/2 - 1/2P - 3 - 3P - 4 - 7**

7.1 Accessories

WPD/HL = (only for DHL-*__DC__) manual override with detent, to be ordered separatelly, see section 18

⚠ The manual override operation can be possible only if the pressure at T port is lower than 50 bar

8 Q/ΔP DIAGRAMS based on mineral oil ISO VG 46 at 50°C

Spool type \ Flow direction	P→A	P→B	A→T	B→T	P→T
0	A	A	C	C	D
1, 1P, 1/1	C	C	C		
3, 3P, 3/1	D	D	A	A	
4, 4/8, 5	F	F	G	C	E
0/2, 1/2, 1/2P	D	D	D	D	
6, 7, 16, 17	D	D	D	D	
8, 8P	A	A	E	E	
2, 6/7	D	D			
2/2	F	F			
19, 91	E	E	D	D	
39, 93	F	F	G	G	

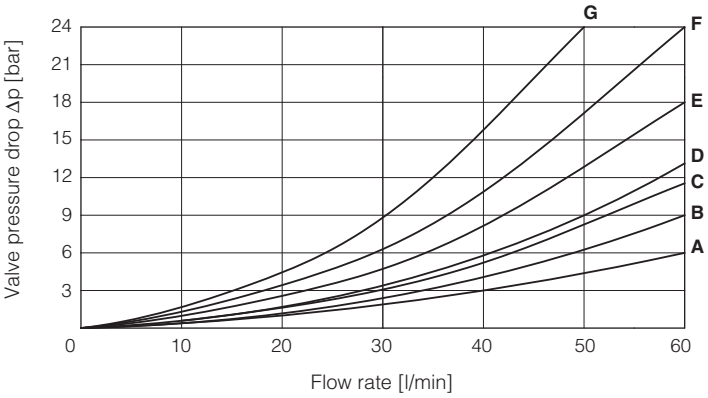

9 OPERATING LIMITS based on mineral oil ISO VG 46 at 50°C

The diagrams have been obtained with warm solenoids and power supply at lowest value (V_{nom} - 10%). The curves refer to application with symmetrical flow through the valve (i.e. P→A and B→T). In case of asymmetric flow and if the valves have the devices for controlling the switching times the operating limits must be reduced.

Curve	DC version, spool type:
A	0, 0/2, 1/2, 1/2P, 8, 8P
B	1, 1P, 1/1
C	3, 3P, 3/1, 6, 7
D	4, 4/8, 16, 17, 5, 19, 39, 58, 91, 93
E	2, 2/2, 6/7

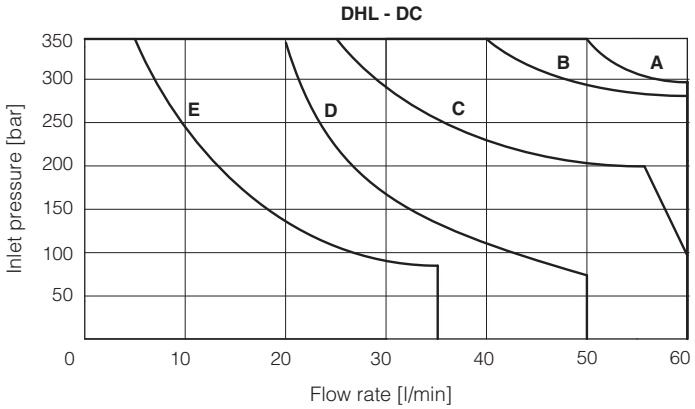

Curve	AC version, spool type:
A	0, 0/2, 1/2, 1/2P, 8, 8P
B	1, 1P, 1/1
C	3, 3P, 3/1, 6, 7
D	4, 16, 17, 4/8, 5, 19, 39, 58, 91, 93
E	2, 2/2, 6/7

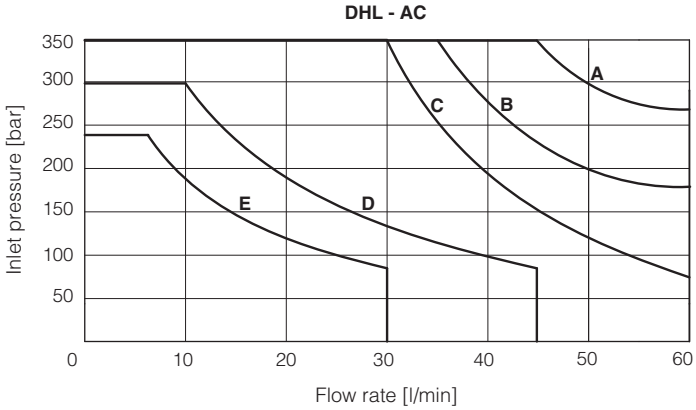

10 SWITCHING TIMES (average values in msec)

Test conditions: - 20 l/min; 150 bar
- nominal voltage
- 2 bar of counter pressure on port T
- mineral oil: ISO VG 46 at 50°C

The elasticity of the hydraulic circuit and the variations of the hydraulic characteristics and temperature affect the response time.

Valve	Switch-on AC	Switch-off AC	Switch-on DC	Switch-off DC
DHL	10 - 25	20 - 40	30 - 50	15 - 25

11 SWITCHING FREQUENCY

Valve	AC (cycles/h)	DC (cycles/h)
DHL + 666 / 667	7200	15000

12 ELECTRIC CONNECTORS ACCORDING TO DIN 43650 (to be ordered separately, see tech table K500)

666 = standard connector IP-65, suitable for direct connection to electric supply source
667 = as 666, but with built-in signal led. Available for power supply voltage 24 AC or DC, 110 AC or DC, 220 AC or DC
669 = with built-in rectifier bridge for supplying DC coils by alternate current (AC 110V and 230V - Imax 1A)
E-SD = electronic connector which eliminates electric disturbances when solenoid valves are de-energized

13 COILS WITH SPECIAL CONNECTORS only for voltage supply **12, 14, 24, 28** VDC

Deutsch connector DT-04-2P

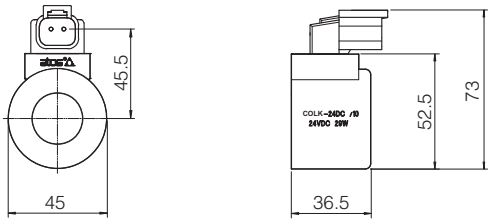

Options -XK

Coil type COLK, Deutsch connector DT-04-2P male
Protection degree **IP67**

Note: For the electric characteristics refer to standard coils features - see section 6

14 SEALS AND HYDRAULIC FLUID - for other fluids not included in below table, consult our technical office

Seals, reccomended fluid temperature	NBR seals (standard) = -20°C ÷ +80°C, with HFC hydraulic fluids = -20°C ÷ +50°C FKM seals (/PE option) = -20°C ÷ +80°C		
Recommended viscosity	15÷100 mm²/s - max allowed range 2,8 ÷ 500 mm²/s		
Max fluid contamination level	ISO4406 class 20/18/15 NAS1638 class 9, see also filter section at www.atos.com or KTF catalog		
Hydraulic fluid	**Suitable seals type**	**Classification**	**Ref. Standard**
Mineral oils	NBR, FKM	HL, HLP, HLPD, HVLP, HVLPD	DIN 51524
Flame resistant without water	FKM	HFDU, HFDR	ISO 12922
Flame resistant with water	NBR	HFC	

15 PLUG-IN RESTRICTOR (to be ordered separately)

The use of plug-in restrictors in valve's ports P or A or B may be necessary is case of particular conditions as long flexible hoses or the presence of accumulators which could cause at the valve switching instantaneous high flow peaks over the max valve's operating limits.

PLUG-H	-	**	A

08, 10, 12, 15 calibrated orifice diameter in tenths of mm
Example PLUG-H-**12** = orifice diameter **1,2 mm**
Other orifice dimensions are available on request

Short calibrated orifice

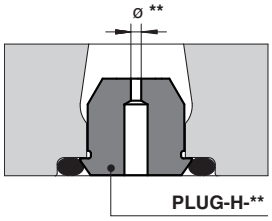

16 FASTENING BOLTS AND SEALS

Fastening bolts	Seals
4 socket head screws M5x30 class 12.9 Tightening torque = 8 Nm	4 OR 108; Diameter of ports A, B, P, T: Ø 7,5 mm (max)

17 DIMENSIONS [mm]

ISO 4401: 2005
Mounting surface: 4401-03-02-0-05

Mass (Kg)		
	DC	AC
DHL-06	1,3	1,2
DHL-07	1,6	1,4

P = PRESSURE PORT
A, B = USE PORT
T = TANK PORT

Valve's bottom view

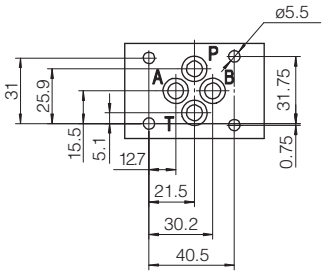

DHL-06 (DC)

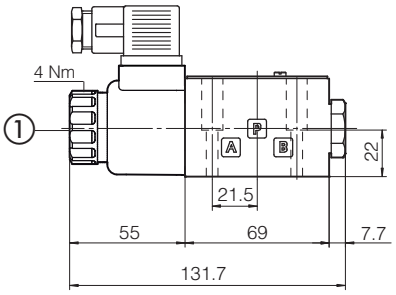

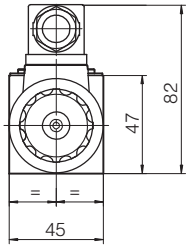

DHL-06*/A (DC)

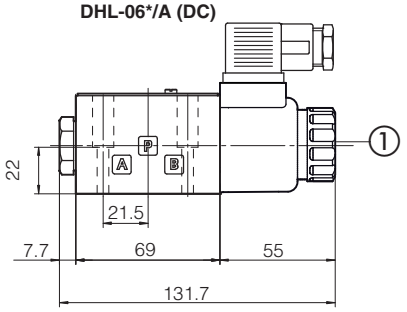

DHL-07 (DC)

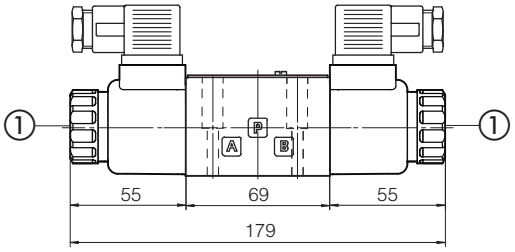

DHL-06 (AC)

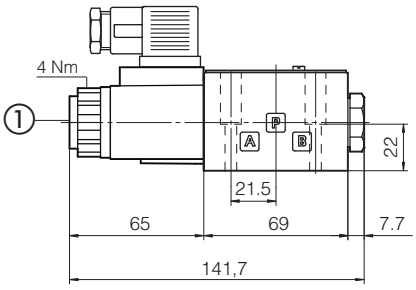

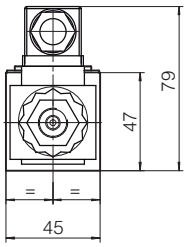

DHL-06*/A (AC)

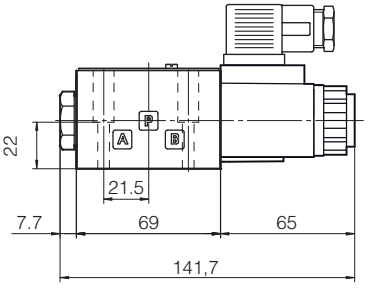

DHL-07 (AC)

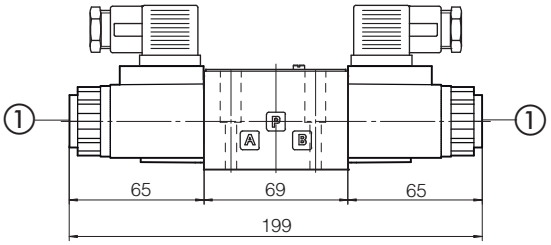

(1) Standard manual override PIN

⚠ The manual override operation can be possible only if the pressure at T ports is lower than 50 bar

18 MANUAL OVERRIDE

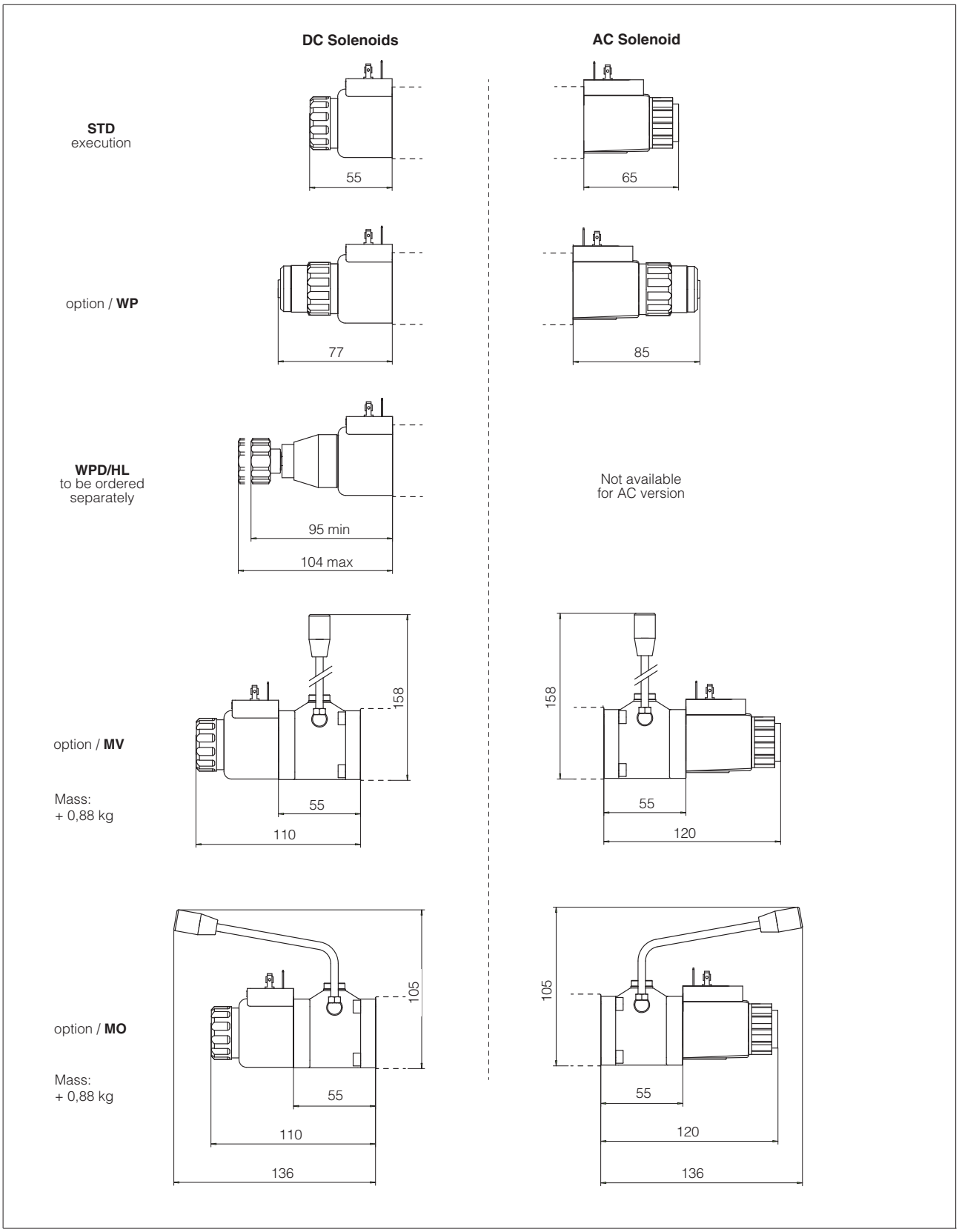

19 RELATED DOCUMENTATION

E001	Basics for solenoid directional valves	**P005**	Mounting surfaces for electrohydraulic valves
K150	Handweels for hydraulic controls	**E900**	Operating and maintenance information
K280	Single and modular subplates		
K800	Electric and electronic connectors		

Solenoid directional valves type DHE

direct, spool type, high flow

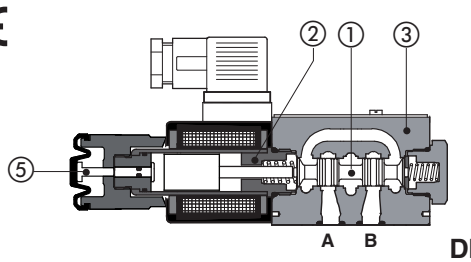

DHE-061*/WP-X *AC

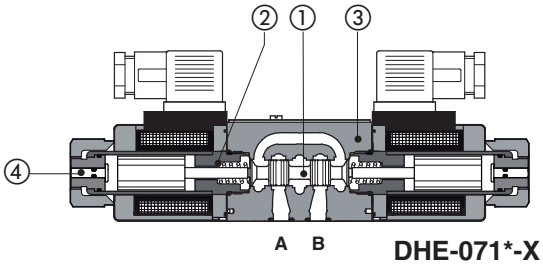

DHE-071*-X *DC

Spool type, two or three position direct operated valves with high performance threaded solenoids certified according the North American standard **cURus**.

Solenoids ② are made by:

- wet type screwed tube, different for AC and DC power supply, with integrated manual override pin ④
- interchangeable coils, specific for AC or DC power supply, easily replaceable without tools - see section 5 for available voltages

Standard coils protection **IP65** optional coils with IP67 AMP Junior Timer or lead wire connections.

Wide range of interchangeable spools ①, see section 2.

The valve body ③ is 3 chamber type made by shell-moulding casting with wide internal passages.

Mounting surface: **ISO 4401 size 06**
Max flow: **80 l/min**
Max pressure: **350 bar**

1 MODEL CODE

DHE - 0	61	1 / A - X	24 DC	* / *

DHE - 0: Directional control valves size 06

61: Valve configuration, see section 2
- **61** = single solenoid, center plus external position, spring centered
- **63** = single solenoid, 2 external positions, spring offset
- **67** = single solenoid, center plus external position, spring offset
- **70** = double solenoid, 2 external positions, without spring
- **71** = double solenoid, 3 positions, spring centered
- **75** = double solenoid, 2 external positions, with detent

1: Spool type, see section 2.

A: Options, see note 1 at section 4.

X:
- **00-AC** = AC solenoids without coils
- **00-DC** = DC solenoids without coils
- **X** = without connector

See section 14 for available connectors, to be ordered separately
Coils with special connectors, see section 11
- **XJ** = AMP Junior Timer connector
- **XK** = Deutsch connector
- **XS** = Lead Wire connection

24 DC: Voltage code, see section 5

*****: Series number

*****: Seals material, see section 3:
- **-** = NBR
- **PE** = FKM
- **BT** = HNBR

2 CONFIGURATIONS and SPOOLS (representation according to ISO 1219-1)

Configurations

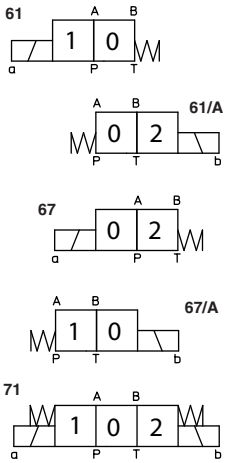

Spools

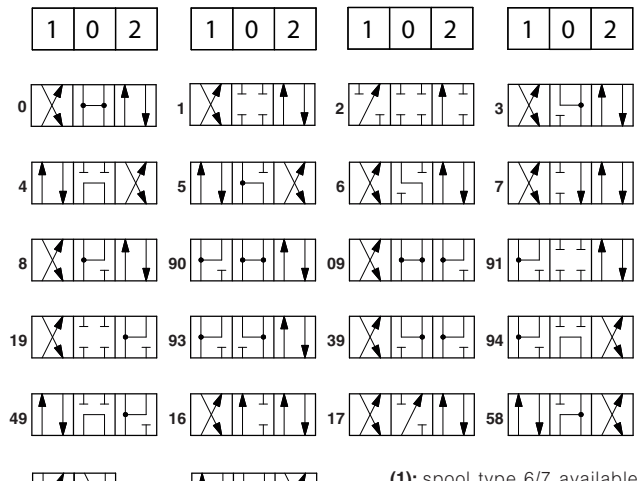

(1): spool type 6/7 available only for configuration 61, not available for version /A

Configurations

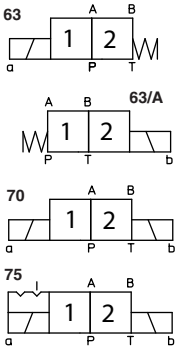

Spools

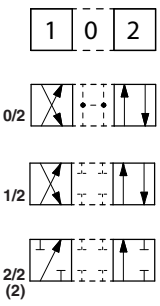

(2): not available for configuration 75

Note: see also section 4, note 3, for special shaped spools

3 MAIN CHARACTERISTICS, SEALS AND HYDRAULIC FLUID - for other fluids not included in below table, consult our technical office

Assembly position / location	Any position		
Subplate surface finishing	Roughness index Ra 0,4 - flatness ratio 0,01/100 (ISO 1101)		
MTTFd values according to EN ISO 13849	150 years, for further details see technical table P007		
Ambient temperature	**Standard** = -30°C ÷ +70°C **/PE** option = -20°C ÷ +70°C **/BT** option = -40°C ÷ +70°C		
Storage temperature	**Standard** = -30°C ÷ +80°C **/PE** option = -20°C ÷ +80°C **/BT** option = -40°C ÷ +80°C		
Surface protection	Body: zinc coating with black passivation Coil: zinc nickel coating (DC version) plastic incapsulation (AC version)		
Corrosion resistance	Salt spray test (EN ISO 9227) > 200 h		
Compliance	CE to Low Voltage Directive 2014/35/EU RoHS Directive 2011/65/EU as last update by 2015/863/EU REACH Regulation (EC) n°1907/2006		
Seals, recommended fluid temperature	NBR seals (standard) = -20°C ÷ +80°C, with HFC hydraulic fluids = -20°C ÷ +50°C FKM seals (/PE option) = -20°C ÷ +80°C HNBR seals (/BT option) = -40°C ÷ +60°C, with HFC hydraulic fluids = -40°C ÷ +50°C		
Recommended viscosity	15÷100 mm²/s - max allowed range 2.8 ÷ 500 mm²/s		
Max fluid contamination level	ISO4406 class 20/18/15 NAS1638 class 9, see also filter section at www.atos.com or KTF catalog		
Hydraulic fluid	**Suitable seals type**	**Classification**	**Ref. Standard**
Mineral oils	NBR, FKM, HNBR	HL, HLP, HLPD, HVLP, HVLPD	DIN 51524
Flame resistant without water	FKM	HFDU, HFDR	ISO 12922
Flame resistant with water	NBR, HNBR	HFC	
Flow direction	As shown in the symbols of table 2		
Operating pressure	Ports P,A,B: **350** bar; Port T **210** bar for DC version; **160** bar for AC version		
Rated flow	See diagrams Q/Δp at section 6		
Maximum flow	**80 l/min**, see operating limits at section 7		

3.1 Coils characteristics

Insulation class	**H** (180°C) for DC coils **F** (155°C) for AC coils Due to the occuring surface temperatures of the solenoid coils, the European standards EN ISO 13732-1 and EN ISO 4413 must be taken into account
Protection degree to DIN EN 60529	**IP 65** (with connectors 666, 667, 669 correctly assembled)
Relative duty factor	100%
Supply voltage and frequency	See electric feature 5
Supply voltage tolerance	± 10%
Certification	**cURus** North American Standard

4 NOTES

1 Options

A = Solenoid mounted at side of port B (only for single solenoid valves). In standard versions, solenoid is mounted at side of port A.
WP = prolonged manual override protected by rubber cap.

⚠ The manual override operation can be possible only if the pressure at T port is lower than 50 bar - see section 12.

L1, L2, L3 = (only for DHE-DC) device for switching time control, installed in the valve solenoid, see section 9.
For spools 4 and 4/8 only device L3 is available.
FI, FV = with proximity or inductive position switch for monitoring spool position: see tab. E110.
MV, MO = auxiliary hand lever positioned vertically (MV) or horizontally (MO).
Available for configuration: **61 - 63 - 71**, spools: **0 - 0/2 - 1 - 1P - 1/2 - 1/2P - 3 - 3P - 4 - 7**.

2 Accessories

WPD/HE-DC = (only for DHE-DC) manual override with detent, to be ordered separately, see tab. K150

3 Special shaped spools

- spools type **0** and **3** are also available as **0/1** and **3/1** with restricted oil passages in central position, from user ports to tank.
- spools type **1, 4**, **5** and **58** are also available as **1/1, 4/8, 5/1** and **58/1.** They are properly shaped to reduce water-hammer shocks during the swiching.
- spools type **1, 1/2, 3, 8** are available as **1P, 1/2P, 3P, 8P** to limit valve internal leakages.
- spool type **1/9** has closed center in rest position but it avoids the pressurization of A and B ports due to the internal leakages.
- Other types of spools can be supplied on request.

5 ELECTRIC FEATURES

External supply nominal voltage ± 10%	**Voltage code**	Type of connector	Power consumption (2)	Code of spare coil DHE
12 DC	**12 DC**	666 or 667	30 W	COE-12DC
14 DC	**14 DC**			COE-14DC
24 DC	**24 DC**			COE-24DC
28 DC	**28 DC**			COE-28DC
48 DC	**48 DC**			COE-48DC
110 DC	**110 DC**			COE-110DC
125 DC	**125 DC**			COE-125DC
220 DC	**220 DC**			COE-220DC
24/50 AC	**24/50/60 AC**		58 VA (3)	COE-24/50/60AC (1)
48/50 AC	**48/50/60 AC**			COE-48/50/60AC (1)
110/50 AC	**110/50/60 AC**			COE-110/50/60AC (1)
230/50 AC	**230/50/60 AC**			COE-230/50/60AC (1)
115/50 AC	**115/60 AC**		80 VA (3)	COE-115/60AC
230/50 AC	**230/60 AC**			COE-230/60AC
110/50 AC - 120/60 AC	**110 RC**	669	30 W	COE-110RC
230/50 AC - 230/60 AC	**230 RC**			COE-230RC

(1) Coil can be supplied also with 60 Hz of voltage frequency: in this case the performances are reduced by 10 ÷15% and the power consumption is 52 VA.
(2) Average values based on tests preformed at nominal hydraulic condition and ambient/coil temperature of 20°C.
(3) When solenoid is energized, the inrush current is approx 3 times the holding current.

6 Q/ΔP DIAGRAMS based on mineral oil ISO VG 46 at 50°C

Spool type \ Flow direction	P→A	P→B	A→T	B→T	P→T
0, 0/1	A	A	C	C	D
1, 1/1	D	C	C	C	
3, 3/1	D	D	A	A	
4, 4/8, 5, 5/1, 49, 58, 58/1, 94	F	F	G	C	E
1/2, 0/2	D	D	D	D	
6, 7, 16, 17	D	D	D	D	
8	A	A	E	E	
2	D	D			
2/2	F	F			
09, 19, 90, 91	E	E	D	D	
1/9, 39, 93	F	F	G	G	

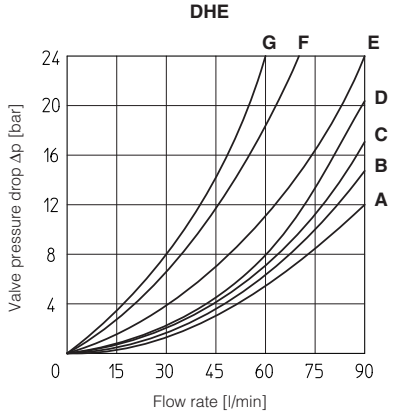

7 OPERATING LIMITS based on mineral oil ISO VG 46 at 50°C

The diagrams have been obtained with warm solenoids and power supply at lowest value (V_{nom} - 10%). The curves refer to application with symmetrical flow through the valve (i.e. P→A and B→T). In case of asymmetric flow and if the valves have the devices for controlling the switching times the operating limits must be reduced.

Curve	Spool type AC	Spool type DC
A	1, 1/2, 8	0, 0/1, 1, 1/2, 3, 8
B	0, 0/1, 0/2, 1/1, 1/9, 3	0/2, 1/1, 6, 7, 1/9, 19
C	3, 3/1, 6, 7	3/1, 4, 4/8, 5, 5/1, 16, 17, 19, 39, 49, 58, 58/1, 09, 90, 91, 93, 94
D	4, 4/8, 5, 5/1, 16, 17, 19, 39, 58, 58/1, 09, 90, 91, 93, 94	2, 2/2
E	2, 2/2	-

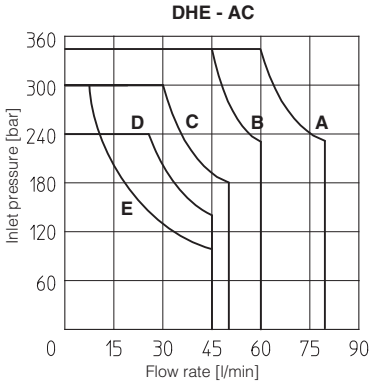

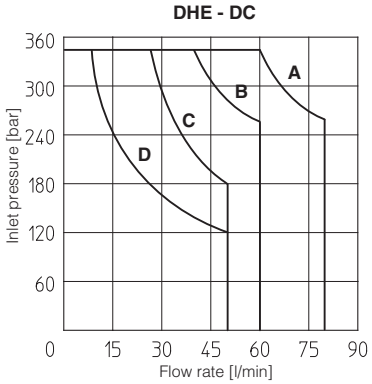

8 SWITCHING TIMES (average values in msec)

Test conditions: - 36 l/min; 150 bar
- nominal voltage
- 2 bar of counter pressure on port T
- mineral oil: ISO VG 46 at 50°C

The elasticity of the hydraulic circuit and the variations of the hydraulic characteristics and temperature affect the response time.

Valve	Switch-on AC	Switch-off AC	Switch-on DC	Switch-off DC
DHE	10 - 25	20 - 40	30 - 50	15 - 25
DHE-*/L1	—	—	60	60
DHE-*/L2	—	—	80	80
DHE-*/L3	—	—	150	150

9 DEVICES FOR THE SWITCHING TIME CONTROL

These devices are used to control the valve's switching time (only for DC version) and therefore reduce the hammering shocks in the hydraulic circuit.

Options L1, L2, L3 control the switching time in both moving directions of the valve spool by means of calibrated restrictors installed in the solenoid anchor.

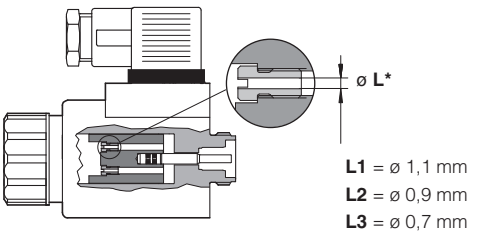

10 SWITCHING FREQUENCY

Valve	AC (cycles/h)	DC (cycles/h)
DHE + 666 / 667	7200	15000

11 COIL WITH SPECIAL CONNECTORS only for voltage supply 12, 14, 24, 28 VDC

AMP Junior timer connector

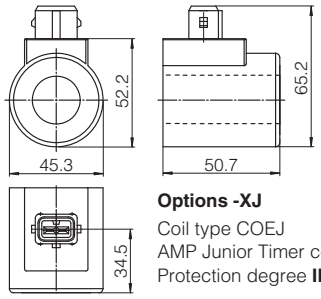

Options -XJ
Coil type COEJ
AMP Junior Timer connector
Protection degree **IP67**

Deutsch connector DT-04-2P

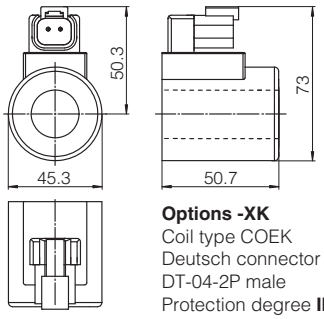

Options -XK
Coil type COEK
Deutsch connector
DT-04-2P male
Protection degree **IP67**

Lead Wire connection

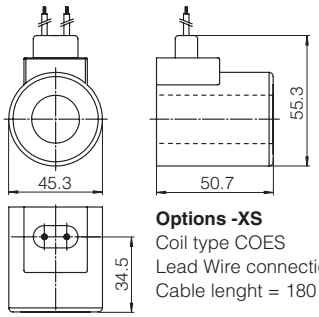

Options -XS
Coil type COES
Lead Wire connection
Cable lenght = 180 mm

Note: for the electric characteristics refer to standard coils features - see section 5

12 DIMENSIONS [mm]

ISO 4401: 2005
Mounting surface: 4401-03-02-0-05
Fastening bolts: 4 socket head screws:
M5x30 class 12.9
Tightening torque = 8 Nm
Seals: 4 OR 108
Ports P,A,B,T: Ø = 7.5 mm (max)

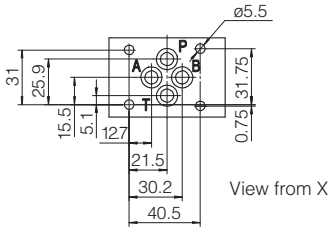

P = PRESSURE PORT
A, B = USE PORT
T = TANK PORT

DHE-06(DC)

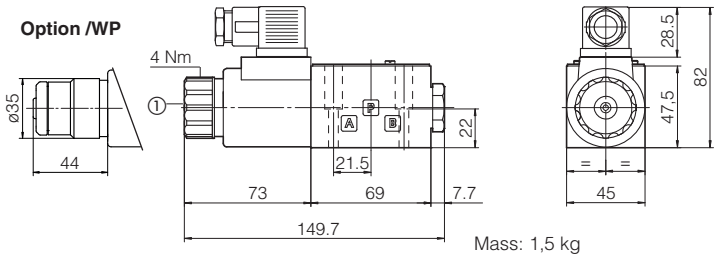

Mass: 1,5 kg

DHE-07(DC)

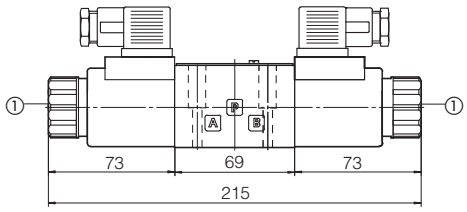

Mass: 2 kg

DHE-06(AC)

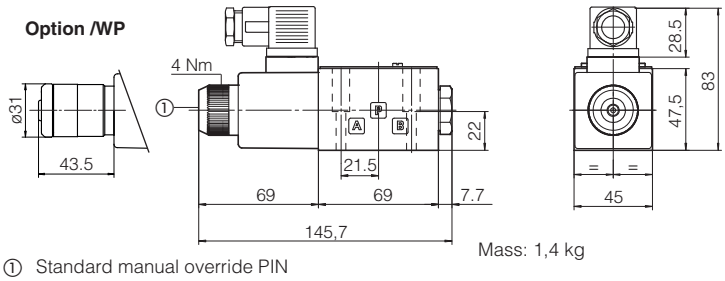

Mass: 1,4 kg

DHE-07(AC)

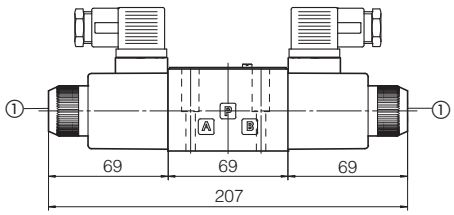

Mass: 1,8 kg

① Standard manual override PIN

⚠ The manual override operation can be possible only if the pressure at T ports is lower than 50 bar

Overall dimensions refer to valves with connector 666

13 PLUG-IN RESTRICTOR (to be ordered separately)

The use of plug-in restrictors in valve's ports P or A or B may be necessary is case of particular conditions as long flexible hoses or the presence of accumulators which could cause at the valve switching instantaneous high flow peaks over the max valve's operating limits.

PLUG-H	-	**	A

08, 10, 12, 15 calibrated orifice diameter in tenths of mm
Example PLUG-H-**12** = orifice diameter **1,2 mm**
Other orifice dimensions are available on request

Short calibrated orifice

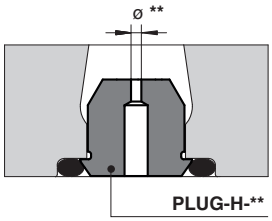

14 ELECTRIC CONNECTORS ACCORDING TO DIN 43650 (to be ordered separately)

666 = standard connector IP-65, suitable for direct connection to electric supply source
667 = as 666, but with built-in signal led. Available for power supply voltage 24 AC or DC, 110 AC or DC, 220 AC or DC
669 = with built-in rectifier bridge for supplying DC coils by alternate current (AC 110V and 230V - Imax 1A)

15 MOUNTING SUBPLATES

Model	Ports location	GAS Ports A-B-P-T	Ø Counterbore [mm] A-B-P-T	Mass [kg]
BA-202	Ports A, B, P, T underneath;	3/8"	–	1,2
BA-204	Ports P, T underneath; ports A, B on lateral side	3/8"	25,5	1,8
BA-302	Ports A, B, P, T underneath	1/2"	30	1,8

The subplates are supplied with 4 fastening bolts M5x50. Also available are multi-station subplates and modular subplates. For further details see table K280.

Solenoid directional valves Pmax 420 bar

direct operated, ISO 4401 size 06

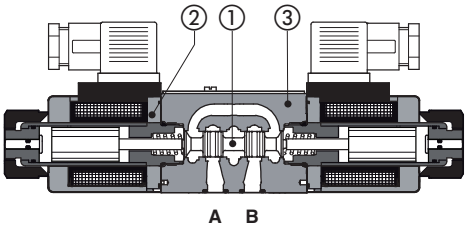

DHEP-07*-DC**

① Spool
② Solenoid
③ Valve body

DHEP
Spool type, direct operated solenoid valves with max pressure up to 420 bar for heavy duty applications.

They are equipped with threaded solenoids certified according the North American standard **cURus**
Single and double solenoid valves are available in two or three position configurations and with a wide range of interchangeable spools ①, see section 2.

Solenoids ② are made by:
- wet type screwed tube, different for AC and DC power supply, with integrated manual override pin.
- interchangeable coils, specific for AC or DC power supply, easily replaceable without tools - see section 6 for available voltages

Standard coils protection IP65 (once correctly assembled with relevant electric connectors).
The valve body ③ is made by high strength cast iron.

Mounting surface ISO 4401 size **06**
Max flow up to **80** l/min
Max pressure: **420** bar

1 MODEL CODE

DHEP - 0	63	1/2	/A	X	24 DC	**	/*

Directional control valves
DHEP-0 = Size 06

Valve configuration, see table 2
61 = single solenoid, center plus external position, spring centered
63 = single solenoid, 2 external positions, spring offset
67 = single solenoid, center plus external position, spring offset
71 = double solenoid, 3 positions, spring centered
75= double solenoid, 2 external positions, with detent

Spool type, see section 2

Options, see note 1 at section 7

00-AC = AC solenoids without coils
00-DC = DC solenoids without coils
X = without connector
See section 13 for available connectors, to be ordered separately
Coils with special connectors, see section 14
XJ = AMP Junior Timer connector
XK = Deutsch connector
XS = Lead Wire connection

Voltage code, see section 6

Series number

Seals material, see sect. 15:
- = NBR
PE = FKM
BT = NBR low temperature

2 CONFIGURATIONS and SPOOLS

Configurations

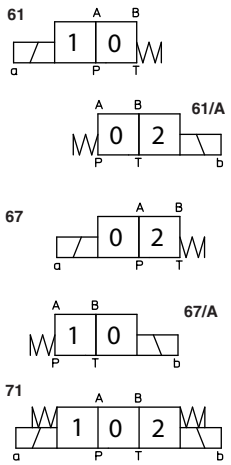

Spools

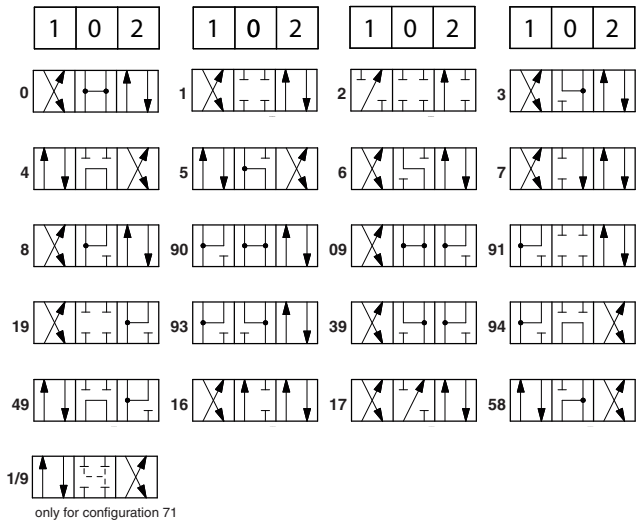

only for configuration 71

Configurations

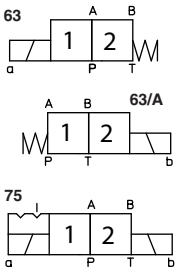

Spools

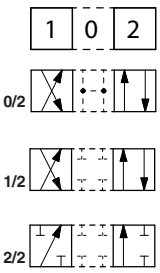

3 GENERAL CHARACTERISTICS

Assembly position	Any position
Subplate surface finishing to ISO 4401	Acceptable roughness index, Ra ≤0,8 recommended Ra 0,4 - flatness ratio 0,01/100
MTTFd valves according to EN ISO 13849	150 years, see technical table P007
Ambient temperature range	**Standard** = -30°C ÷ +70°C **/PE** option = -20°C ÷ +70°C **/BT** option = -40°C ÷ +60°C
Storage temperature range	**Standard** = -30°C ÷ +80°C **/PE** option = -20°C ÷ +80°C **/BT** option = -40°C ÷ +80°C
Surface protection	Body: zinc coating with black passivation Coil: zinc nickel coating (DC version) plastic incapsulation (AC version)
Corrosion resistance	Salt spray test (EN ISO 9227) > 200 h
Compliance	CE to Low Voltage Directive 2014/35/EU RoHS Directive 2011/65/EU as last update by 2015/863/EU REACH Regulation (EC) n°1907/2006

4 HYDRAULIC CHARACTERISTICS

Operating pressure	Ports P,A,B: **420** bar; Port T **210** bar for DC version; **160** bar for AC version
Max flow	**80 l/min**, see Q/Δp diagram at section 8 and operating limits at section 9

5 ELECTRICAL CHARACTERISTICS

Insulation class	**H** (180°C) for DC coils; **F** (155°C) for AC coils Due to the occuring surface temperatures of the solenoid coils, the European standards EN ISO 13732-1 and EN ISO 4413 must be taken into account
Protection degree to DIN EN 60529	**IP 65** (with connectors 666, 667, 669 or E-SD correctly assembled)
Relative duty factor	100%
Supply voltage and frequency	See section 6
Supply voltage tolerance	± 10%

6 COIL VOLTAGE

External supply nominal voltage ± 10%	**Voltage code**	Type of connector	Power consumption (2)	Code of spare coil
12 DC	**12 DC**	666 or 667	30 W	COE-12DC
14 DC	**14 DC**			COE-14DC
24 DC	**24 DC**			COE-24DC
28 DC	**28 DC**			COE-28DC
48 DC	**48 DC**			COE-48DC
110 DC	**110 DC**			COE-110DC
125 DC	**125 DC**			COE-125DC
220 DC	**220 DC**			COE-220DC
24/50 AC	**24/50/60 AC**		58 VA (3)	COE-24/50/60AC (1)
48/50 AC	**48/50/60 AC**			COE-48/50/60AC (1)
110/50 AC	**110/50/60 AC**			COE-110/50/60AC (1)
230/50 AC	**230/50/60 AC**			COE-230/50/60AC (1)
115/50 AC	**115/60 AC**		80 VA (3)	COE-115/60AC
230/50 AC	**230/60 AC**			COE-230/60AC
110/50 AC - 120/60 AC	**110 RC**	669	30 W	COE-110RC
230/50 AC - 230/60 AC	**230 RC**			COE-230RC

(1) Coil can be supplied also with 60 Hz of voltage frequency: in this case the performances are reduced by 10 ÷15% and the power consumption is 52 VA.
(2) Average values based on tests preformed at nominal hydraulic condition and ambient/coil temperature of 20°C.
(3) When solenoid is energized, the inrush current is approx 3 times the holding current.

7 NOTES FOR DHEP

1 Options

A = Solenoid mounted at side of port B (only for single solenoid valves). In standard versions, solenoid is mounted at side of port A.
WP = prolonged manual override protected by rubber cap.

⚠ The manual override operation can be possible only if the pressure at T port is lower than 50 bar - see section 17.

L1, L2, L3 = (only for DHEP-DC) device for switching time control, installed in the valve solenoid, see section 11.
For spools 4 and 4/8 only device L3 is available.
MV, MO = auxiliary hand lever positioned vertically (MV) or horizontally (MO). For available configuration and dimensions see table E138.

2 Accessories

WPD/HE-DC = (only for DHEP-DC) manual override with detent, to be ordered separately, see tab. K150

3 Special shaped spools

- spools type **0** and **3** are also available as **0/1** and **3/1** with restricted oil passages in central position, from user ports to tank.
- spools type **1, 4**, **5** and **58** are also available as **1/1, 4/8, 5/1** and **58/1.** They are properly shaped to reduce water-hammer shocks during the swiching.
- spools type **1, 1/2, 3, 8** are available as **1P, 1/2P, 3P, 8P** to limit valve internal leakages.
- Other types of spools can be supplied on request.

8 Q/ΔP DIAGRAMS based on mineral oil ISO VG 46 at 50°C

Spool type \ Flow direction	P→A	P→B	A→T	B→T	P→T
0, 0/1	A	A	C	C	D
1, 1/1	D	C	C	C	
3, 3/1	D	D	A	A	
4, 4/8, 5, 5/1, 58, 58/1 09, 90, 91, 93, 94	F	F	G	C	E
1/2, 0/2	D	D	D	D	
6, 7	D	D	D	D	
8	A	A	E	E	
2	D	D			
2/2	F	F			

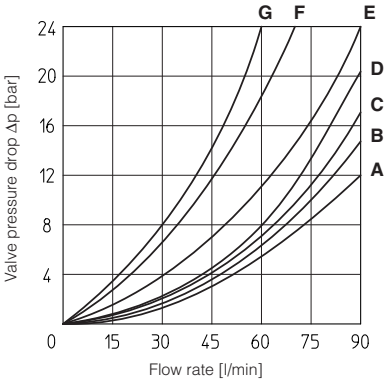

9 OPERATING LIMITS based on mineral oil ISO VG 46 at 50°C

The diagrams have been obtained with warm solenoids and power supply at lowest value (V_{nom} - 10%). The curves refer to application with symmetrical flow through the valve (i.e. P→A and B→T). In case of asymmetric flow and if the valves have the devices for controlling the switching times the operating limits must be reduced.

DHEP - AC

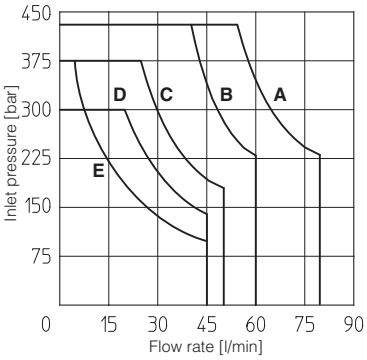

DHEP - DC

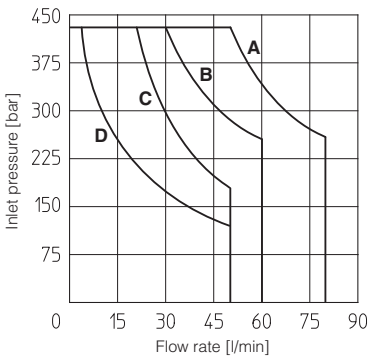

Curve	Spool type AC	Spool type DC
A	1, 1/2, 8	0, 0/1, 1, 1/2, 3, 8
B	0, 0/1, 0/2, 1/1	0/2, 1/1, 6, 7
C	3, 3/1	3/1, 4, 4/8, 5, 5/1, 19, 39, 58, 90, 91, 93, 94
D	4, 4/8, 5, 5/1, 6, 7, 19, 39, 58, 91, 93, 94	2, 2/2
E	2, 2/2	-

10 SWITCHING TIMES (average values in msec)

Test conditions: - 36 l/min; 150 bar
- nominal voltage
- 2 bar of counter pressure on port T
- mineral oil: ISO VG 46 at 50°C

The elasticity of the hydraulic circuit and the variations of the hydraulic characteristics and temperature affect the response time.

Valve	Switch-on AC	Switch-off AC	Switch-on DC	Switch-off DC
DHEP	10 - 25	20 - 40	30 - 50	15 - 25
DHEP-*/L1	—	—	60	60
DHEP-*/L2	—	—	80	80
DHEP-*/L3	—	—	150	150

12 SWITCHING FREQUENCY

Valve	AC (cycles/h)	DC (cycles/h)
DHE + 666 / 667	7200	15000

11 DEVICES FOR THE SWITCHING TIME CONTROL

These devices are used to control the valve's switching time (only for DC version) and therefore reduce the hammering shocks in the hydraulic circuit.

Options L1, L2, L3 control the switching time in both moving directions of the valve spool by means of calibrated restrictors installed in the solenoid anchor.

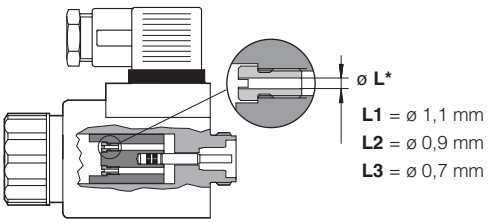

13 ELECTRIC CONNECTORS ACCORDING TO DIN 43650 (to be ordered separately, see tech table K800)

666 = standard connector IP-65, suitable for direct connection to electric supply source
667 = as 666, but with built-in signal led. Available for power supply voltage 24 AC or DC, 110 AC or DC, 220 AC or DC
669 = with built-in rectifier bridge for supplying DC coils by alternate current (AC 110V and 230V - Imax 1A)
E-SD = electronic connector which eliminates electric disturbances when solenoid valves are de-energized

14 COIL WITH SPECIAL CONNECTORS only for voltage supply 12, 14, 24, 28 VDC

AMP Junior timer connector

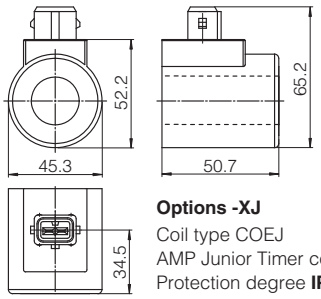

Options -XJ
Coil type COEJ
AMP Junior Timer connector
Protection degree **IP67**

Deutsch connector DT-04-2P

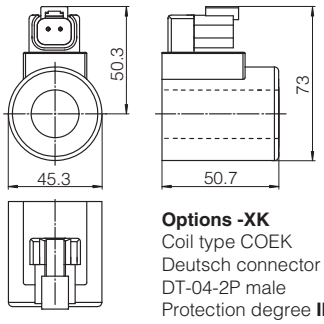

Options -XK
Coil type COEK
Deutsch connector
DT-04-2P male
Protection degree **IP67**

Lead Wire connection

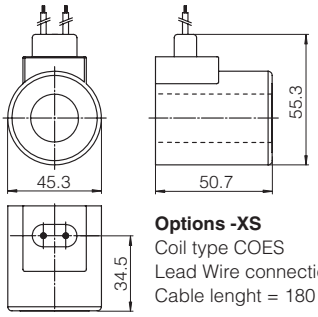

Options -XS
Coil type COES
Lead Wire connection
Cable lenght = 180 mm

Note: for the electric characteristics refer to standard coils features - see section 6

15 SEALS AND HYDRAULIC FLUIDS - for other fluids not included in below table, consult our technical office

Seals, recommended fluid temperature	NBR seals (standard) = -20°C ÷ +80°C, with HFC hydraulic fluids = -20°C ÷ +50°C FKM seals (/PE option) = -20°C ÷ +80°C NBR low temp. seals (/BT option) = -40°C ÷ +60°C, with HFC hydraulic fluids = -40°C ÷ +50°C		
Recommended viscosity	15÷100 mm²/s - max allowed range 2,8 ÷ 500 mm²/s		
Max fluid contamination level	ISO4406 class 20/18/15 NAS1638 class 9, see also filter section at www.atos.com or KTF catalog		
Hydraulic fluid	**Suitable seals type**	**Classification**	**Ref. Standard**
Mineral oils	NBR, FKM, NBR low temp.	HL, HLP, HLPD, HVLP, HVLPD	DIN 51524
Flame resistant without water	FKM	HFDU, HFDR	ISO 12922
Flame resistant with water	NBR, NBR low temp.	HFC	

16 FASTENING BOLTS AND SEALS

Fastening bolts	Seals
4 socket head screws M5x30 class 12.9 Tightening torque = 8 Nm	4 OR 108; Diameter of ports A, B, P, T: Ø 7,5 mm (max)

17 INSTALLATION DIMENSIONS [mm]

ISO 4401: 2005
Mounting surface: 4401-03-02-0-05

Mass (Kg)		
	DC	AC
DHEP-06	1,5	1,4
DHEP-07	2	1,8

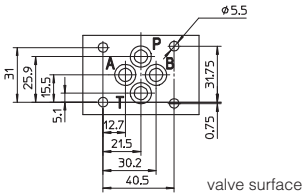

P = PRESSURE PORT
A, B = USE PORT
T = TANK PORT

DHEP-06(DC)

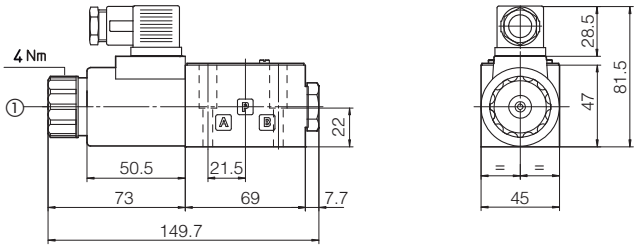

DHEP-06*/A(DC)

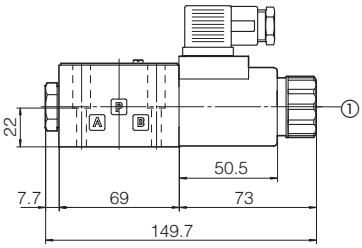

DHEP-07(DC)

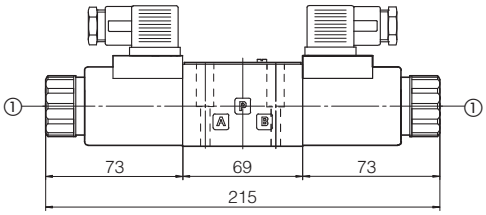

DHEP-06(AC)

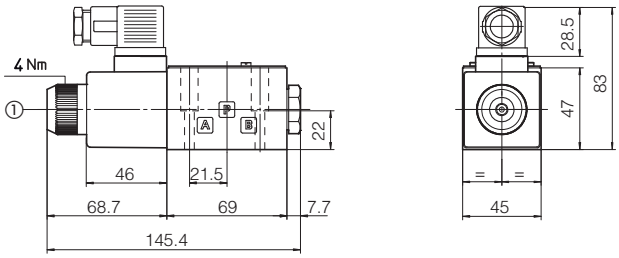

DHEP-06*/A(AC)

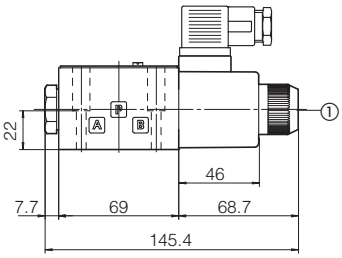

DHEP-07(AC)

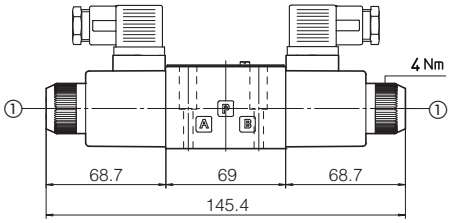

Overall dimensions refer to valves with connectors type 666

① Standard manual override PIN. The manual override operation can be possible only if the pressure at T ports is lower than 50 bar

18 MANUAL OVERRIDE

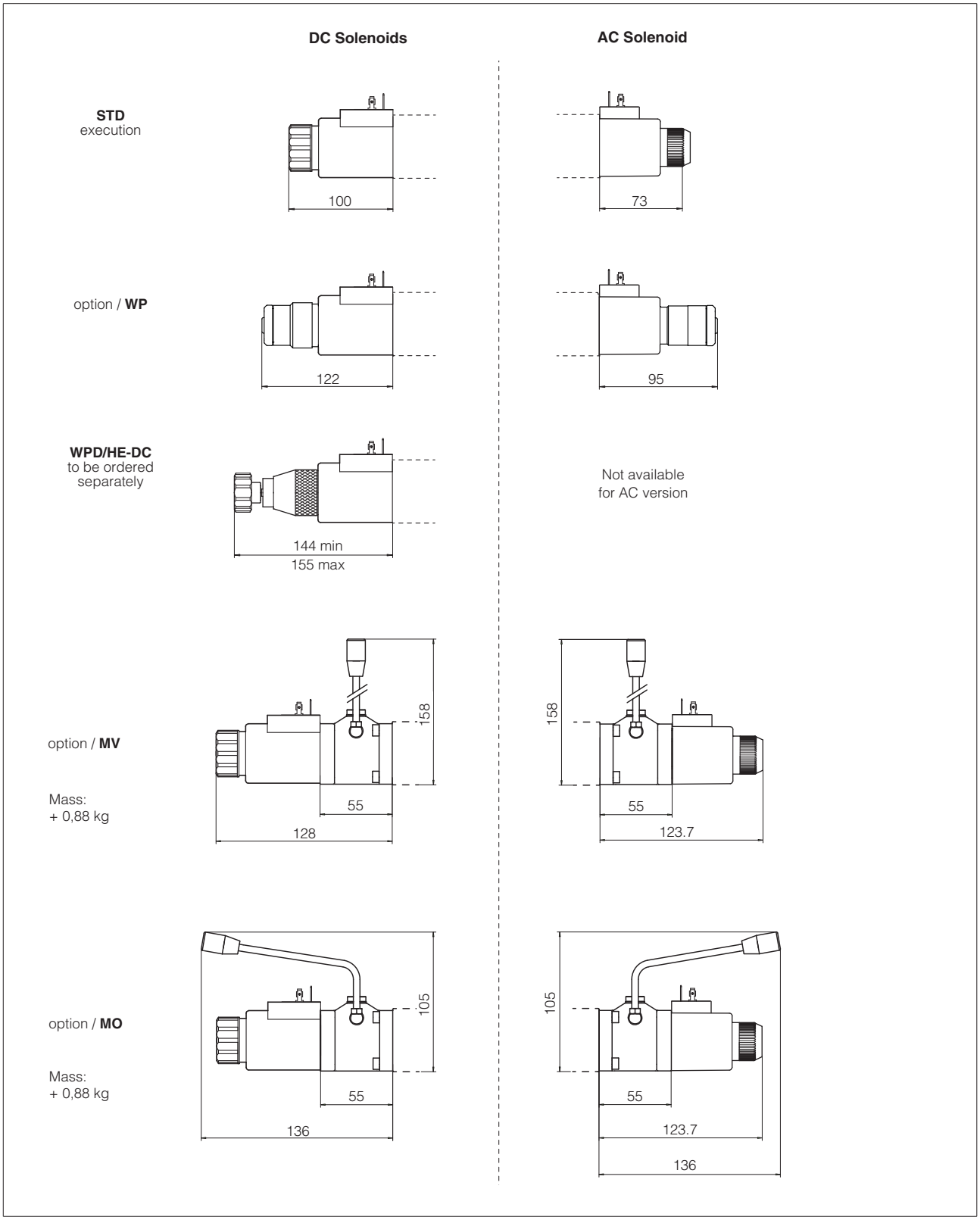

19 RELATED DOCUMENTATION

E001	Basics for solenoid directional valves	**P005**	Mounting surfaces for electrohydraulic valves
K150	Handweels for hydraulic controls	**E900**	Operating and maintenance information
K280	Single and modular subplates		
K800	Electric and electronic connectors		

Solenoid directional valves type DKE

direct, spool type

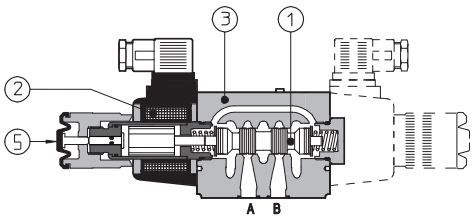

DKE-161*/WP-X *AC (3 CHAMBERS BODY)

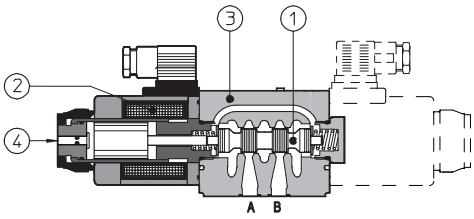

DKE-17*-X *DC (5 CHAMBERS BODY)

Spool type, two or three position direct operated valves with threaded solenoids certified according the North American standard **cURus**.

Solenoids ② are made by:

- wet type screwed tube, different for AC and DC power supply, with integrated manual override pin ④
- interchangeable coils, specific for AC or DC power supply, easily replaceable without tools - see section 5 for available voltages.

Standard coils protection **IP65**, optional coils with IP67 AMP Junior Timer or lead wire connections.

The valve body ③ is 5 chamber type for all DC versions and for AC safety version /FI and FV

Standard AC version uses 3 chamber type body.

Wide range of interchangeable spools ①, see section 2.

The body is made by shell-moulding casting with wide internal passages ensuring low pressure drops.

Mounting surface: **ISO 4401 size 10**
Max flow: **150 l/min**
Max pressure: **350 bar**

1 MODEL CODE

DKE - 1	61	1	/	A	-	X	24 DC	*	/	*

DKE - 1: Directional control valves size 10

61: Valve configuration, see section 2
- **61** = single solenoid, center plus external position, spring centered
- **63** = single solenoid, 2 external positions, spring offset
- **67** = single solenoid, center plus external position, spring offset
- **70** = double solenoid, 2 external positions, without springs
- **71** = double solenoid, 3 positions, spring centered
- **75** = double solenoid, 2 external positions, with detent

1: Spool type, see section 2.

A: Options, see note 1 at section 4.

X:
- **00-AC** = AC solenoids without coils
- **00-DC** = DC solenoids without coils
- **X** = without connector

See section 14 for available connectors, to be ordered separately
Coils with special connectors, see section 11
- **XJ** = AMP Junior Timer connector
- **XK** = Deutsch connector
- **XS** = Lead Wire connection

24 DC: Voltage code, see section 5

*****: Series number

*****: Seals material, see section 4:
- **-** = NBR
- **PE** = FKM
- **BT** = HNBR

2 CONFIGURATIONS and SPOOLS (representation according to ISO 1219-1)

Configurations

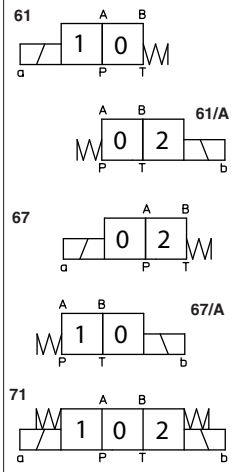

Spools

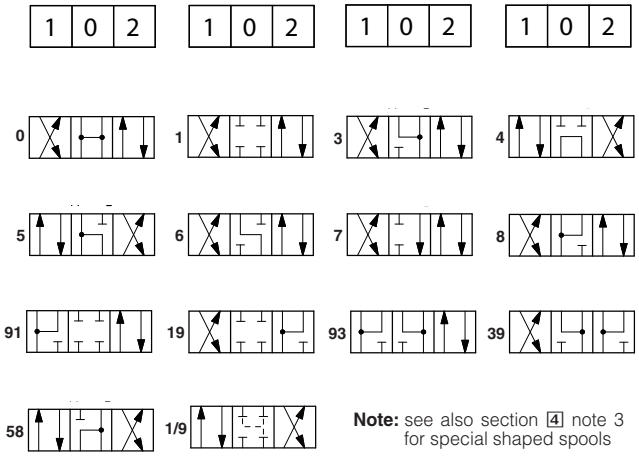

Note: see also section 4 note 3 for special shaped spools

Configurations

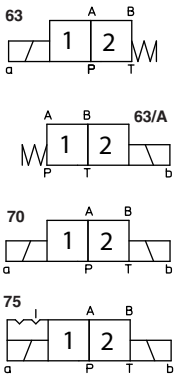

Spools

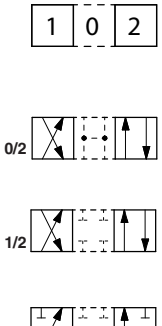

3 MAIN CHARACTERISTCS, SEALS AND HYDRAULIC FLUIDS - for other fluids not included in below table, consult our technical office

Assembly position / location	Any position for all valves except for type - 170* (without springs) that must be installed with horizontal axis if operated by impulses		
Subplate surface finishing	Roughness index Ra 0,4 - flatness ratio 0,01/100 (ISO 1101)		
MTTFd values according to EN ISO 13849	150 years, for further details see technical table P007		
Ambient temperature	**Standard** = -30°C ÷ +70°C	**/PE** option = -20°C ÷ +70°C	**/BT** option = -40°C ÷ +70°C
Storage temperature	**Standard** = -30°C ÷ +80°C	**/PE** option = -20°C ÷ +80°C	**/BT** option = -40°C ÷ +80°C
Surface protection	Body: zinc coating with black passivation	Coil: zinc nickel coating (DC version) plastic incapsulation (AC version)	
Corrosion resistance	Salt spray test (EN ISO 9227) > 200 h		
Compliance	CE to Low Voltage Directive 2014/35/EU RoHS Directive 2011/65/EU as last update by 2015/863/EU REACH Regulation (EC) n°1907/2006		
Seals, recommended fluid temperature	NBR seals (standard) = -20°C ÷ +80°C, with HFC hydraulic fluids = -20°C ÷ +50°C FKM seals (/PE option)= -20°C ÷ +80°C HNBR seals (/BT option)= -40°C ÷ +60°C, with HFC hydraulic fluids = -40°C ÷ +50°C		
Recommended viscosity	15÷100 mm²/s - max allowed range 2.8 ÷ 500 mm²/s		
Max fluid contamination level	ISO4406 class 20/18/15 NAS1638 class 9, see also filter section at www.atos.com or KTF catalog		
Hydraulic fluid	**Suitable seals type**	**Classification**	**Ref. Standard**
Mineral oils	NBR, FKM, HNBR	HL, HLP, HLPD, HVLP, HVLPD	DIN 51524
Flame resistant without water	FKM	HFDU, HFDR	ISO 12922
Flame resistant with water	NBR, HNBR	HFC	
Flow direction	As shown in the symbols of table 2		
Operating pressure	Ports P,A,B: **350** bar; Port T **210** bar for DC version (**250** bar with option /Y); **160** bar for AC version		
Rated flow	See diagrams Q/Δp at section 6		
Maximum flow	**150 l/min**, see operating limits at section 7		

3.1 Coils characteristics

Insulation class	**H** (180°C) for DC coils **F** (155°C) for AC coils Due to the occuring surface temperatures of the solenoid coils, the European standards EN ISO 13732-1 and EN ISO 4413 must be taken into account
Protection degree DIN EN 60529	**IP 65** (with connectors 666, 667, 669 correctly assembled)
Relative duty factor	100%
Supply voltage and frequency	See electric feature 5
Supply voltage tolerance	± 10%
Certification	**cURus** North American Standard

4 NOTES

1 Options

A = Solenoid mounted at side of port B (only for single solenoid valves). In standard versions, solenoid is mounted at side of port A.
WP = prolonged manual override protected by rubber cap - see section 12.
L, L1, L2, L3, LR, L7, L8 see section 10 = device for switching time control (only for DC solenoids).
L7 and L8 are available only for spool type 0/1, 1/1, 3/1, 4 and 5.
FI, FV = versions with proximity switch for spool position monitoring: see tab. EY010.
Y = external drain, only for DC version, to be selected if the pressure at T port is higher than the max allowed limits.

2 Accessories

WPD/KE-DC = (only for DC supply) manual override with detent, to be ordered separately, see tab. K150

3 Special shaped spools

- spools type **0** and **3** are also available as **0/1** and **3/1** with restricted oil passages in central position, from user ports to tank.
- spool type **1** is also available as **1/1**, properly shaped to reduce the water-hammer shocks during the switching.
- spool type **1/9** has closed center in rest position but it avoids the pressurization of A and B ports due to the internal leakages.

5 ELECTRIC FEATURES

External supply nominal voltage ± 10%	**Voltage code**	Type of connector	Power consumption (2)	Code of spare coil
12 DC	**12 DC**	666 or 667	36 W	CAE-12DC
14 DC	**14 DC**			CAE-14DC
24 DC	**24 DC**			CAE-24DC
28 DC	**28 DC**			CAE-28DC
110 DC	**110 DC**			CAE-110DC
125 DC	**125 DC**			CAE-125 DC
220 DC	**220 DC**			CAE-220DC
110/50/60 AC	**110/50/60 AC**		100 VA (3)	CAE-110/50/60AC (1)
230/50/60 AC	**230/50/60 AC**			CAE-230/50/60AC (1)
115/60 AC	**115/60 AC**		130 VA (3)	CAE-115/60AC
230/60 AC	**230/60 AC**			CAE-230/60AC
110/50/60 AC	**110 DC**	669	36 W	CAE-110DC
230/50/60 AC	**220 DC**			CAE-220DC

(1) In case of 60 Hz voltage frequency the performances are reduced by 10÷15% and the power consumption is 90 VA

(2) Average values based on tests performed at nominal hydraulic condition and ambient/coil temperature of 20°C.

(3) When solenoid is energized, the inrush current is approx 3 times the holding current.

6 Q/ΔP DIAGRAMS based on mineral oil ISO VG 46 at 50°C

Spool type \ Flow direction	P→A	P→B	A→T	B→T	P→T	B→A
0, 0/1, 0/2, 2/2	A	A	B	B		
1, 1/1, 6, 8	A	A	D	C		
3, 3/1, 7	A	A	C	D		
4	B	B	B	B	F	
5, 58	A	B	C	C	G	
1/2	B	C	C	B		
19, 91	F	F	G	G		H
1/9, 39, 93	F	F	G	G		H

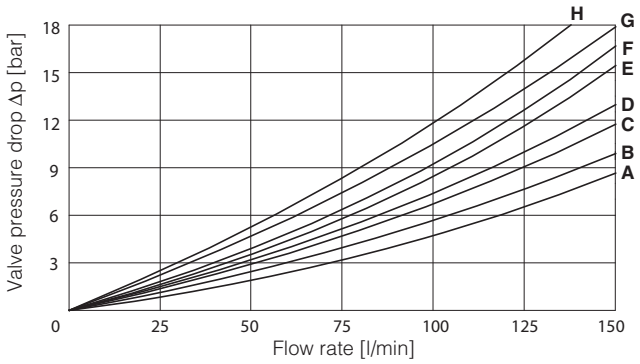

7 OPERATING LIMITS based on mineral oil ISO VG 46 at 50°C

The diagrams have been obtained with warm solenoids and power supply at lowest value (V_{nom} - 10%). The curves refer to application with symmetrical flow through the valve (i.e. P→A and B→T). In case of asymmetric flow and if the valves have the devices for controlling the switching times the operating limits must be reduced.

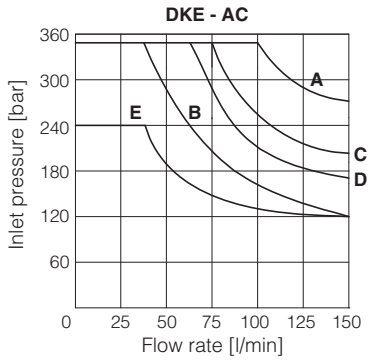

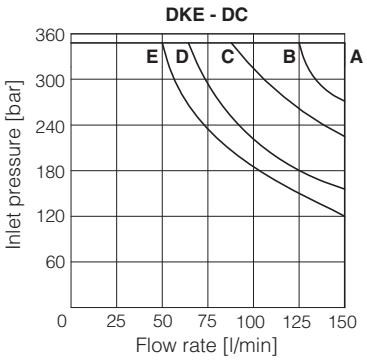

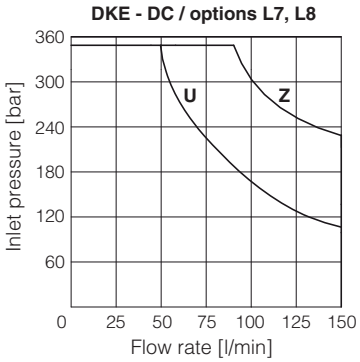

Curve	Spool type: AC	Spool type: DC
A	0/1	0, 0/1, 1, 1/1, 3, 3/1, 1/2, 0/2, 8
B	4, 5, 19, 91	6, 7
C	0, 1/1, 3, 3/1	19, 91
D	1, 1/2, 0/2	4, 5
E	6, 7, 8, 2/2	2/2
U	-	4, 5
Z	-	0/1, 1/1, 3/1

8 SWITCHING TIMES (average values in msec)

Valve	Switch-on AC	Switch-on DC	Switch-off AC	Switch-off DC
DKE + 666 / 667	40	60	25	35
DKE + 669	60	—	90	—
DKE-*/L*	—	75÷150	—	45÷150
DKE-*/L7 - DKE-*/L8	—	100÷150	—	100÷150

Test conditions:

- 50 l/min; 150 bar
- nominal supply voltage
- 2 bar of back pressure on port T
- mineral oil ISO VG 46 at 50°C

The elasticity of the hydraulic circuit and the variations of the hydraulic characteristics and temperature affect the response time.

9 SWITCHING FREQUENCY

Valve	AC (cycles/h)	DC (cycles/h)
DKE + 666 / 667	7200	15000

10 DEVICES FOR SWITCHING TIME CONTROL

These devices are only available for DC valve version (5 chambers body) and can control the switching time and therefore reduce the coil hammering in the hydraulic circuit. The different types are available shown in the figure.

- **L**: controls and regulates the switching time in both moving directions of the spool: regulation is carried out by screwing/unscrewing the element itself (regulating choke);
- **L1/L2/L3**: controls the switching time in both moving directions of the spool by means of fixed calibrated restrictor (gauged flow). The restrictor is positioned in the valve's body ØL1 = 1,25 mm; ØL2 = 1 mm; ØL3 = 0,75 mm;
- **LR**: controls and regulates the switching time in the B→A direction of the spool movement. The device does not control the switching time (standard time) in the opposite direction A→B of the spool movement.
- **L7/L8**: controls the switching time in both moving directions of the spool by means of fixed calibrated restrictor (gauged flow). The restrictor is installed in the solenoid's anchor.

For a correct operation of the switching time control, the passage in which the control device is installed must be completely filled with oil.

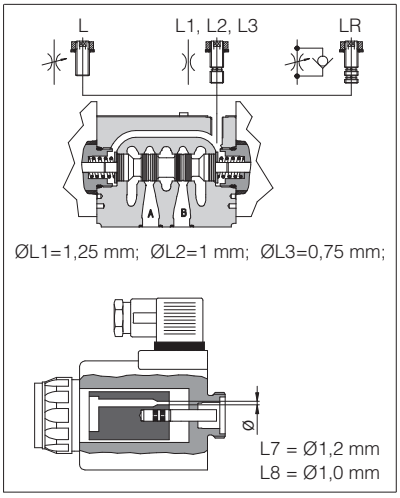

11 COILS TYPE CAE WITH SPECIAL CONNECTORS (only for 12DC, 14DC, 24DC and 28DC)

Options -XJ
Coil type CAEJ
AMP Junior Timer connector
Protection degree IP67

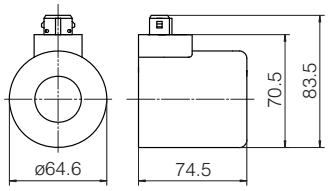

Options -XK
Coil type CAEK
Deutsch connector, DT-04-2P male
Protection degree IP67

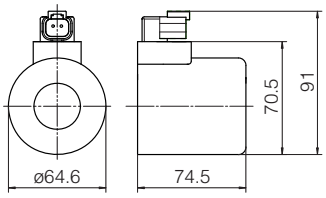

Options -XS
Coil type CAES
Lead Wire connection
Cable lenght = 180 mm

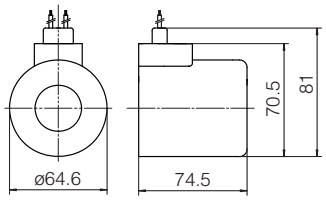

12 INSTALLATION DIMENSIONS [mm]

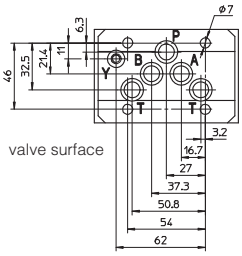

ISO 4401: 2005
Mounting surface according to 4401-05-05-0-05
(without X port, Y port optional)
Fastening bolts:
4 socket head screws M6x40 class 12.9
Tightening torque = 15 Nm
Seals: 5 OR 2050 and 1 OR 108
Ports P,A,B,T: Ø = 11.5 mm (max)
Ports Y: Ø = 5 mm

P = PRESSURE PORT
A, B = USE PORT
T = TANK PORT
Y = DRAIN PORT (only for option /Y)
For the max pressures on ports, see section 3

DKE-16*-AC

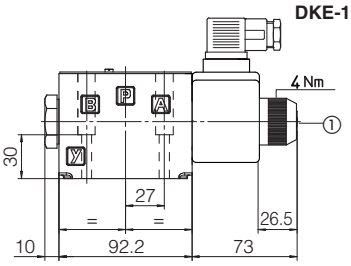

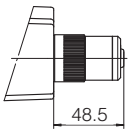

Option /WP

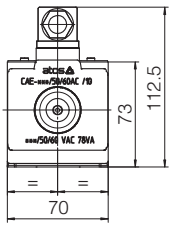

Mass: 3,9 kg

DKE-17*-AC

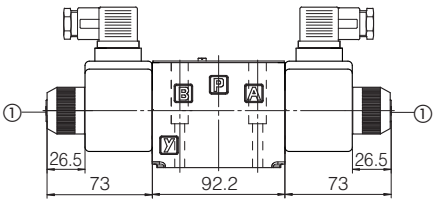

Mass: 4,7 kg

DKE-16*-DC

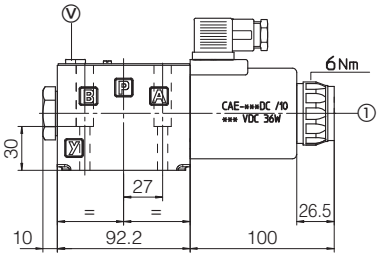

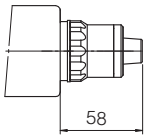

Option /WP

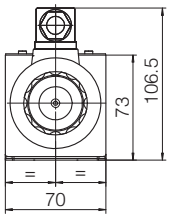

Mass: 4,5 kg

DKE-17*-DC

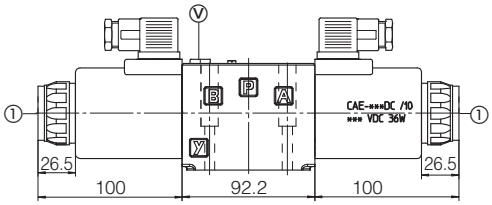

Mass: 6,1 kg

① Standard manual override PIN. The manual override operation can be possible only if the pressure at T ports is lower than 50 bar
Ⓥ Option L, L1, L2, L3, LR

13 ELECTRIC CONNECTORS ACCORDING TO DIN 43650 (to be ordered separately, see tech table K800)

666 = standard connector IP-65, suitable for direct connection to electric supply source
667 = as 666, but with built-in signal led. Available for power supply voltage 24 AC or DC, 110 AC or DC, 220 AC or DC
669 = with built-in rectifier bridge for supplying DC coils by alternate current (AC 110V and 230V - Imax 1A)

14 MOUNTING SUBPLATES

Model		Ports location	GAS Ports A-B-P-T (X-Y)	Ø Counterbore [mm] A-B-P-T (X-Y)	Mass [kg]
BA-308	(/Y)	Ports A, B, P, T (X, Y) underneath	1/2" (1/4")	30 (21,5)	2,5
BA-428	(/Y)	Ports A, B, P, T (X, Y) underneath	3/4" (1/4")	36,5 (21,5)	5,5
BA-434	(/Y)	Ports P, T, (X, Y) underneath; ports A, B on lateral side	3/4" (1/4")	36,5 (21,5)	8,5

The subplates are supplied with 4 fastening bolts M6x40. Also available are multi-station subplates and modular subplates.
For further details see table K280.

Solenoid directional valves Pmax 420 bar

direct operated, ISO 4401 size 10

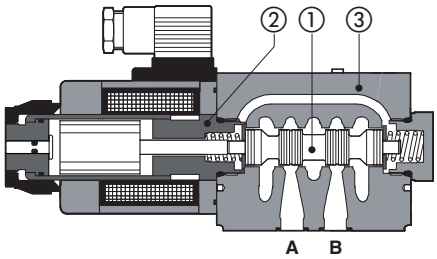

DKEP-16*-DC**

① Spool
② Solenoid
③ Valve body

DKEP
Spool type, direct operated solenoid valves with max pressure up to 420 bar for heavy duty applications.

They are equipped with threaded solenoids certified according the North American standard **cURus**
Single and double solenoid valves are available in two or three position configurations and with a wide range of interchangeable spools ①, see section 2.

Solenoids ② are made by:
- wet type screwed tube, different for AC and DC power supply, with integrated manual override pin.
- interchangeable coils, specific for AC or DC power supply, easily replaceable without tools - see section 6 for available voltages

Standard coils protection IP65 (once correctly assembled with relevant electric connectors).
The valve body ③ is made by high strength cast iron.

Mounting surface ISO 4401 size **10**
Max flow up to **150** l/min
Max pressure: **420** bar

1 MODEL CODE

DKEP - 1	61	0	/A	X	24 DC	**	/*

Directional control valves
DKEP-1 = Size 10

Valve configuration, see table 2
61 = single solenoid, center plus external position, spring centered
63 = single solenoid, 2 external positions, spring offset
67 = single solenoid, center plus external position, spring offset
71 = double solenoid, 3 positions, spring centered
75= double solenoid, 2 external positions, with detent

Spool type, see section 2

Options, see note 1 at section 7

00-AC = AC solenoids without coils
00-DC = DC solenoids without coils
X = without connector
See section 13 for available connectors, to be ordered separately
Coils with special connectors, see section 14
XJ = AMP Junior Timer connector
XK = Deutsch connector
XS = Lead Wire connection

Voltage code, see section 6

Series number

Seals material, see sect. 3, 4:
- = NBR
PE = FKM
BT = NBR low temperature

2 CONFIGURATIONS and SPOOLS

Configurations

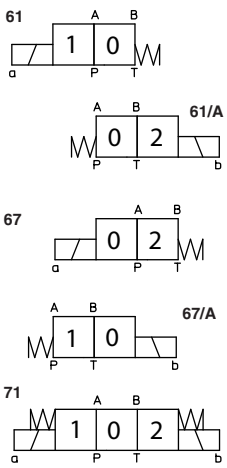

Spools

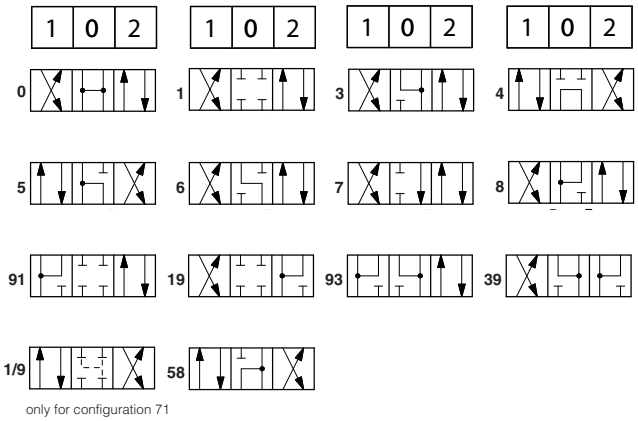

only for configuration 71

Configurations

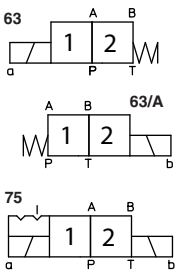

Spools

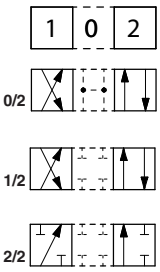

3 GENERAL CHARACTERISTICS

Assembly position	Any position
Subplate surface finishing to ISO 4401	Acceptable roughness index, Ra 0,8 recommended Ra 0,4 - flatness ratio 0,01/100
MTTFd valves according to EN ISO 13849	150 years, see technical table P007
Ambient temperature range	**Standard** = -30°C ÷ +70°C **/PE** option = -20°C ÷ +70°C **/BT** option = -40°C ÷ +60°C
Storage temperature range	**Standard** = -30°C ÷ +80°C **/PE** option = -20°C ÷ +80°C **/BT** option = -40°C ÷ +80°C
Surface protection	Body: zinc coating with black passivation Coil: zinc nickel coating (DC version) plastic incapsulation (AC version)
Corrosion resistance	Salt spray test (EN ISO 9227) > 200 h
Compliance	CE to Low Voltage Directive 2014/35/EU RoHS Directive 2011/65/EU as last update by 2015/863/EU REACH Regulation (EC) n°1907/2006

4 HYDRAULIC CHARACTERISTICS

Operating pressure	Ports P,A,B: **420** bar; Port T **210** bar for DC version; (**350** bar for option /Y); **160** bar for AC version
Max flow	**150 l/min**, see Q/Δp diagram at section 9 and operating limits at section 10

5 ELECTRICAL CHARACTERISTICS

Insulation class	**H** (180°C) for DC coils; **F** (155°C) for AC coils Due to the occuring surface temperatures of the solenoid coils, the European standards EN ISO 13732-1 and EN ISO 4413 must be taken into account
Protection degree to DIN EN 60529	**IP 65** (with connectors 666, 667, 669 or E-SD correctly assembled)
Relative duty factor	100%
Supply voltage and frequency	See section 6
Supply voltage tolerance	± 10%

6 COIL VOLTAGE

External supply nominal voltage ± 10%	**Voltage code**	Type of connector	Power consumption (2)	Code of spare coil
12 DC	**12 DC**	666 or 667	36 W	CAE-12DC
14 DC	**14 DC**			CAE-14DC
24 DC	**24 DC**			CAE-24DC
28 DC	**28 DC**			CAE-28DC
110 DC	**110 DC**			CAE-110DC
125 DC	**125 DC**			CAE-125DC
220 DC	**220 DC**			CAE-220DC
110/50/60 AC	**110/50/60 AC**		100 VA (3)	CAE-110/50/60AC (1)
230/50/60 AC	**230/50/60 AC**			CAE-230/50/60AC (1)
115/50 AC	**115/60 AC**		130 VA (3)	CAE-115/60AC
230/50 AC	**230/60 AC**			CAE-230/60AC
110/50/60 AC	**110 DC**	669	36 W	CAE-110DC
230/50/60 AC	**220 DC**			CAE-220DC

(1) Coil can be supplied also with 60 Hz of voltage frequency: in this case the performances are reduced by 10 ÷ 15% and the power consumption is 90 VA.
(2) Average values based on tests preformed at nominal hydraulic condition and ambient/coil temperature of 20°C.
(3) When solenoid is energized, the inrush current is approx 3 times the holding current.

7 NOTES FOR DKEP

1 Options

A = Solenoid mounted at side of port B (only for single solenoid valves). In standard versions, solenoid is mounted at side of port A.
WP = prolonged manual override protected by rubber cap.
L7, L8 see section 8 = device for switching time control (only for DC solenoids), available only for spool type 0/1, 1/1, 3/1, 4 and 5.
Y = external drain, only for DC version, to be selected if the pressure at T port is higher than the max allowed limits.

⚠ The manual override operation can be possible only if the pressure at T port is lower than 50 bar

WPD/KE-DC = manual override with detent, to be ordered separately, see tab. K150

2 Special spools

- spools type **0** and **3** are also available as **0/1** and **3/1** with restricted oil passages in central position, from user ports to tank.
- spools type **1** is also available as **1/1**, properly shaped to reduce the water-hammer shocks during the switching.
- spool type **1/9** has closed center in rest position but it avoids the pressurization of A and B ports due to the internal leakages.
- other types of spools can be supplied on request.

8 DEVICES FOR SWITCHING TIME CONTROL

These devices are only available for DC valve version (5 chambers body) and can control the switching time and therefore reduce the coil hammering in the hydraulic circuit.

- **L7/L8**: controls the switching time in both moving directions of the spool by means of fixed calibrated restrictor (gauged flow). The restrictor is installed in the solenoid's anchor.

For a correct operation of the switching time control, the passage in which the control device is installed must be completely filled with oil.

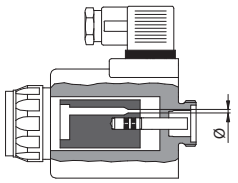

L7 = Ø1,2 mm
L8 = Ø1,0 mm

9 Q/ P DIAGRAMS based on mineral oil ISO VG 46 at 50°C

Flow direction / Spool type	P→A	P→B	A→T	B→T	P→T	B→A
0, 0/1, 0/2, 2/2	A	A	B	B		
1, 1/1, 1/3, 6, 8	A	A	D	C		
3, 3/1, 7	A	A	C	D		
4	B	B	B	B	F	
5	A	B	C	C	G	
1/2	B	C	C	B		
2/7	D			F		
5/7	B			A	E	
19	A	D	C			H

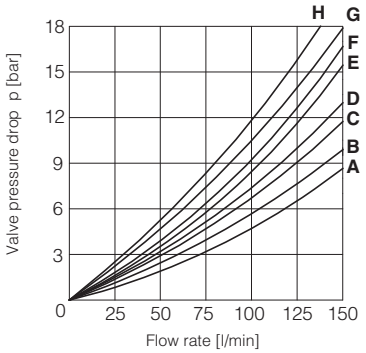

10 OPERATING LIMITS based on mineral oil ISO VG 46 at 50°C

The diagrams have been obtained with warm solenoids and power supply at lowest value (V_{nom} - 10%). The curves refer to application with symmetrical flow through the valve (i.e. P→A and B→T). In case of asymmetric flow and if the valves have the devices for controlling the switching times the operating limits must be reduced.

DKEP - AC

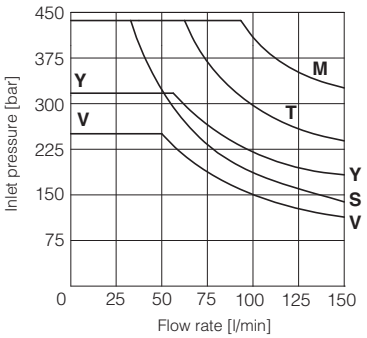

DKEP - DC

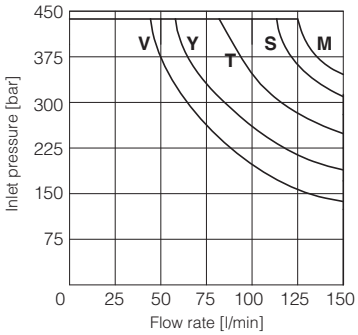

Curve	Spool type AC	Spool type DC
M	0/1, 5/7, 1/3	0, 0/1, 1, 1/1, 3, 3/1, 1/2, 0/2, 8
S	2/7, 4, 5, 19	1/3, 5/7, 6, 7
Y	1, 1/2, 0/2	4, 5, 2/7
V	6, 7, 8, 2/2	2/2
T	0, 1/1, 3, 3/1	19
U	-	4, 5
Z	-	0/1, 1/1, 3/1

11 SWITCHING TIMES (average values in msec)

Valve	Switch-on AC	Switch-on DC	Switch-off AC	Switch-off DC
DKEP + 666 / 667	40	60	25	35

Test conditions:

- 50 l/min; 150 bar
- nominal supply voltage
- 2 bar of back pressure on port T
- mineral oil ISO VG 46 at 50°C

The elasticity of the hydraulic circuit and the variations of the hydraulic characteristics and temperature affect the response time.

12 SWITCHING FREQUENCY

Valve	AC (cycles/h)	DC (cycles/h)
DKEP + 666 / 667	7200	15000

13 ELECTRIC CONNECTORS ACCORDING TO DIN 43650 (to be ordered separately, see tech table K800)

666 = standard connector IP-65, suitable for direct connection to electric supply source
667 = as 666, but with built-in signal led. Available for power supply voltage 24 AC or DC, 110 AC or DC, 220 AC or DC
669 = with built-in rectifier bridge for supplying DC coils by alternate current (AC 110V and 230V - Imax 1A)

14 COIL WITH SPECIAL CONNECTORS only for voltage supply 12, 14, 24, 28 VDC

AMP Junior timer connector

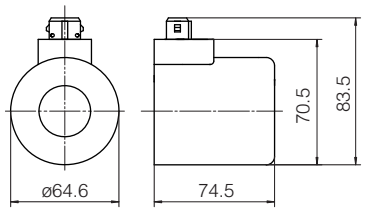

Options -XJ Coil type CAEJ
AMP Junior Timer connector
Protection degree **IP67**

Deutsch connector DT-04-2P

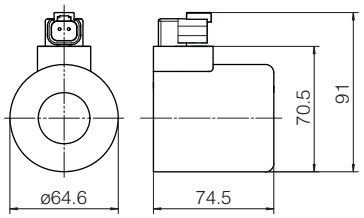

Options -XK Coil type CAEK
Deutsch connector
DT-04-2P male
Protection degree **IP67**

Lead Wire connection

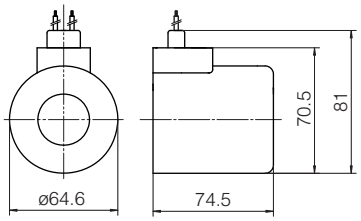

Options -XS Coil type CAES
Lead Wire connection
Cable lenght = 180 mm

Note: for the electric characteristics refer to standard coils features - see section 6

15 SEALS AND HYDRAULIC FLUIDS - for other fluids not included in below table, consult our technical office

Seals, recommended fluid temperature		NBR seals (standard) = -20°C ÷ +80°C, with HFC hydraulic fluids = -20°C ÷ +50°C FKM seals (/PE option) = -20°C ÷ +80°C NBR low temp. seals (/BT option) = -40°C ÷ +60°C, with HFC hydraulic fluids = -40°C ÷ +50°C		
Recommended viscosity		20÷100 mm²/s - max allowed range 15 ÷ 380 mm²/s		
Max fluid contamination level	normal operation	ISO4406 class 18/16/13 NAS1638 class 7	see also filter section at www.atos.com or KTF catalog	
	longer life	ISO4406 class 16/14/11 NAS1638 class 5		
Hydraulic fluid		**Suitable seals type**	**Classification**	**Ref. Standard**
Mineral oils		NBR, FKM, NBR low temp.	HL, HLP, HLPD, HVLP, HVLPD	DIN 51524
Flame resistant without water		FKM	HFDU, HFDR	ISO 12922
Flame resistant with water		NBR, NBR low temp.	HFC	

16 FASTENING BOLTS AND SEALS

Fastening bolts	Seals
4 socket head screws M6x40 class 12.9 Tightening torque = 15 Nm	5 OR 2050; (1 OR 108 for Y optional port); Diameter of ports A, B, P, T: Ø 11.5mm (max); Y: Ø 5mm (optional port)

17 INSTALLATION DIMENSIONS [mm]

ISO 4401: 2005
Mounting surface according to 4401-05-05-0-05
(without X port, Y port optional)

Mass (Kg)		
	DC	AC
DKEP-16	4,5	3,9
DKEP-17	6,1	4,7

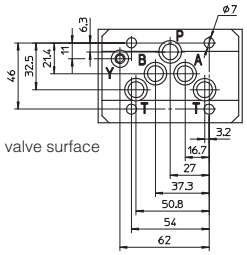

P = PRESSURE PORT
A, B = USE PORT
T = TANK PORT
Y = DRAIN PORT (optional)

DKEP-16*-DC

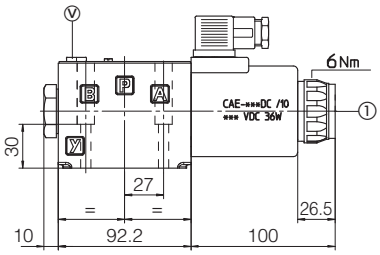

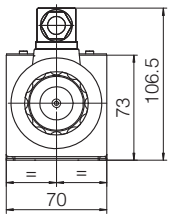

DKEP-16*/A-DC

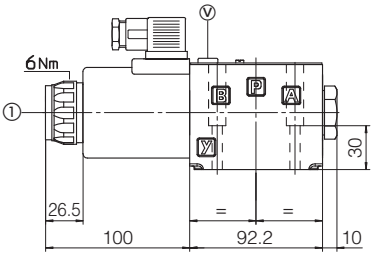

DKEP-17*-DC

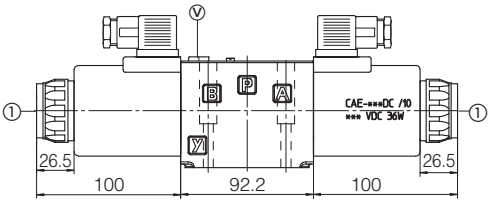

DKEP-16*-AC

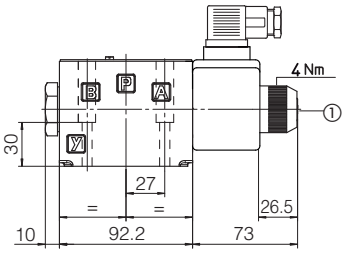

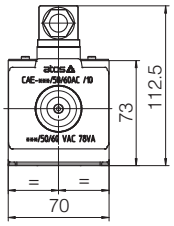

DKEP-16*-AC

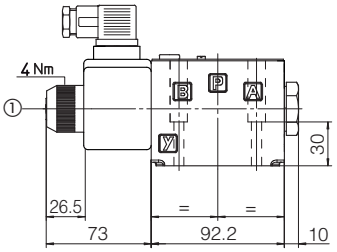

DKEP-17*-AC

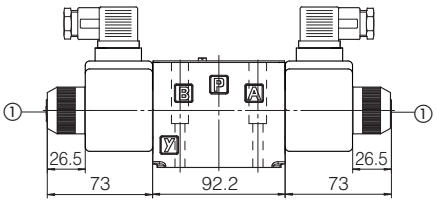

Overall dimensions refer to valves with connectors type 666
① Standard manual override PIN. The manual override operation can be possible only if the pressure at T ports is lower than 50 bar
Ⓥ Option L, L1, L2, L3, LR

18 MANUAL OVERRIDE

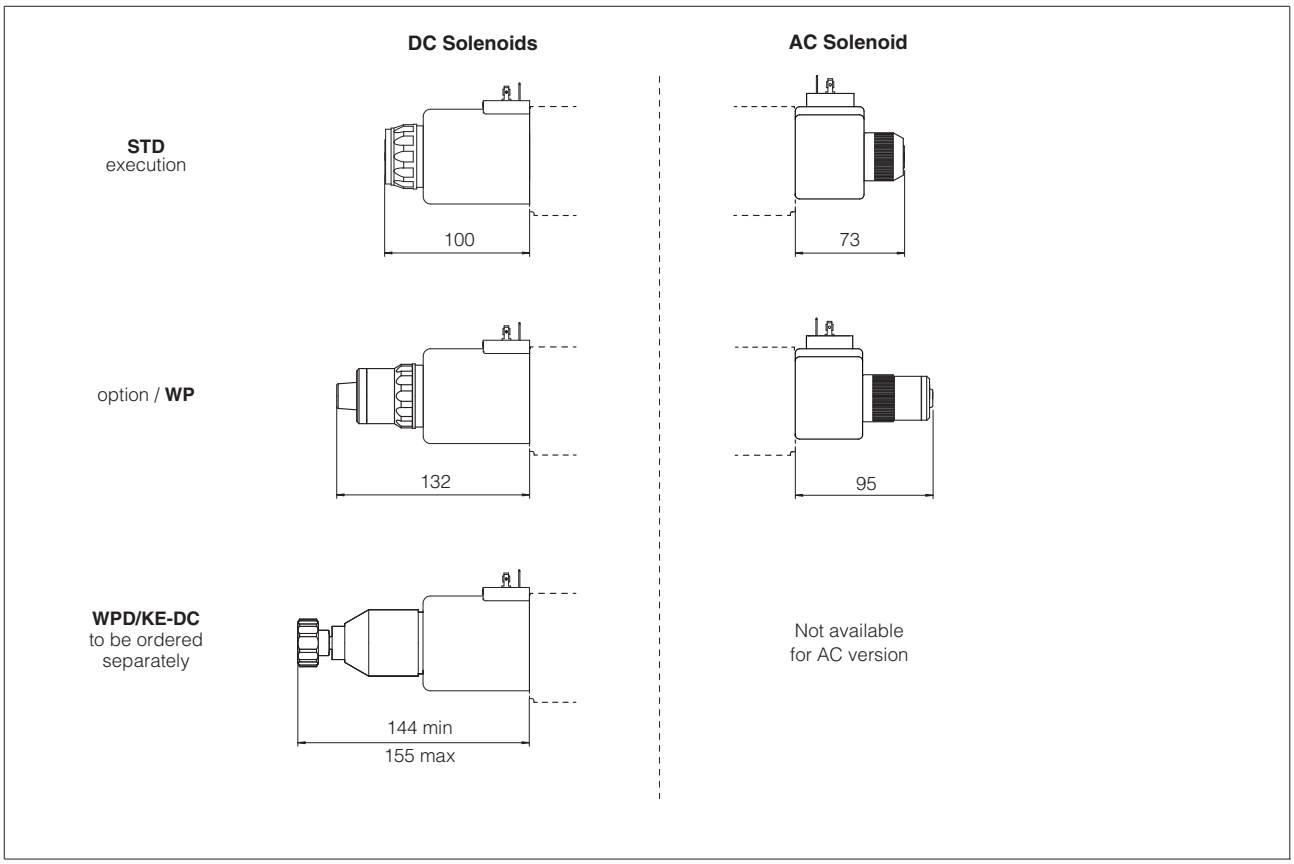

19 RELATED DOCUMENTATION

E001	Basics for solenoid directional valves	**P005**	Mounting surfaces for electrohydraulic valves
K150	Handweels for hydraulic controls	**E900**	Operating and maintenance information
K280	Single and modular subplates		
K800	Electric and electronic connectors		

Solenoid directional valves type DPHL

piloted, spool type

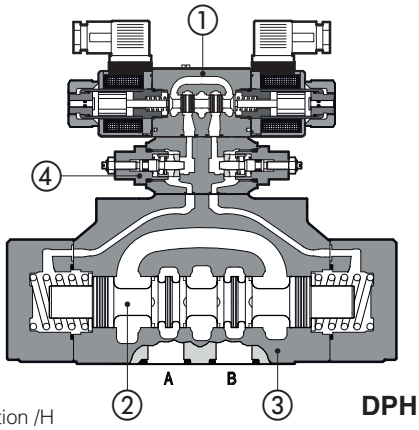

① Solenoid pilot valve
② Main spool
③ Main body
④ Adjustable chokes - option /H

DPHL-471*/H

Spool type, pilot operated directional solenoid valves available in 4/3, 4/2, 3/2 way versions.
They are operated by a directional valve ① type DHL (see tech. table E018) equipped with compact solenoids for AC or DC power supply.
Spools ② are fully interchangeable and they are available in a wide range of hydraulic configurations.
The valve body is made by shell-moulding castings ③ with wide internal passages ensuring low pressure drops.

Mounting surface: **ISO 4401 size 10, 16, 25, 32**
Max flow: **160, 300, 700, 1000 l/min**
Max pressure: **350 bar**

1 MODEL CODE

DPH	L	-	2	61	1	/	A	-	X	24 DC	**	/	*

DPH: Piloted directional valve

L: Solenoid pilot valve:
L = DHL compact execution, AC and DC supply

2: Valve size:
1 = 10 **2** = 16 **4** = 25 **6** = 32

61: Valve configuration, see section 2
61= single solenoid, center plus external position, spring centered
63= single solenoid, 2 external positions, spring offset
67= single solenoid, center plus external position, spring offset
71= double solenoid, 3 positions, spring centered
75= double solenoid, 2 external positions, with detent

1: Spool type, see section 2

A: Options, see section 7

X:
00-AC = AC solenoids without coils
00-DC = DC solenoids without coils
X = without connector
See section 13 for available connectors, to be ordered separately

24 DC: Voltage code, see section 6

******: Series number

*****: Seals material, see section 15 :
- = NBR
PE = FKM

2 CONFIGURATIONS and SPOOLS (representation according to ISO 1219-1)

Configurations

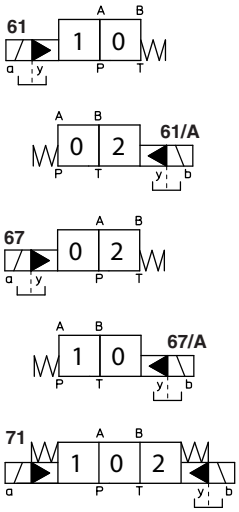

Spools

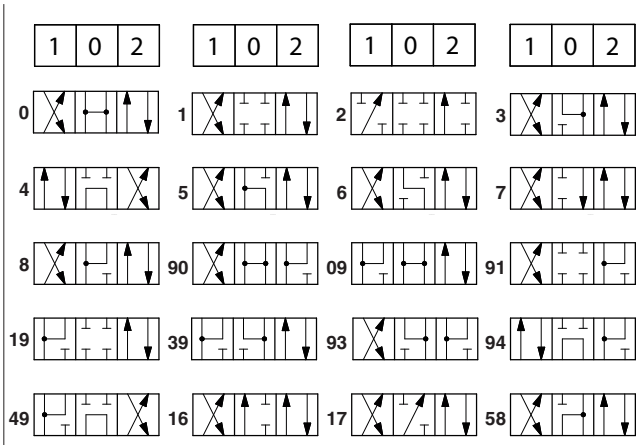

NOTES (see also section 7.1 for special shaped spools):
- For **DPHL-1** are available only spools: **0, 0/2, 1, 1/2, 3, 4, 5, 58, 6, 7**
- For **DPHL-6** are available only spools: **0, 1, 1/2, 2, 3, 4, 5, 58, 6, 7, 8, 19, 91**

Configurations

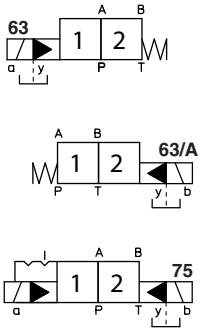

Spools

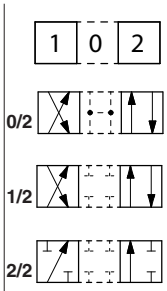

3 GENERAL CHARACTERISTICS

Assembly position	Any position
Subplate surface finishing to ISO 4401	Acceptable roughness index, Ra ≤0,8 recommended Ra 0,4 - flatness ratio 0,01/100
MTTFd valves according to EN ISO 13849	75 years, see technical table P007
Ambient temperature range	**Standard** = -30°C ÷ +70°C **/PE** option = -20°C ÷ +70°C
Storage temperature range	**Standard** = -30°C ÷ +80°C **/PE** option = -20°C ÷ +80°C
Surface protection	Body: zinc coating with black passivation Coil: zinc nickel coating (DC version) plastic incapsulation (AC version)
Corrosion resistance	Salt spray test (EN ISO 9227) > 200 h
Compliance	CE to Low Voltage Directive 2014/35/EU RoHS Directive 2011/65/EU as last update by 2015/863/EU REACH Regulation (EC) n°1907/2006

4 HYDRAULIC CHARACTERISTICS

Flow direction	As shown in the symbols of table 2
Operating pressure	Ports P,A,B: **350** bar; Port T **210** bar for DC version; **160** bar for AC version
Rated flow	See Q/Δp diagram at section 9 and operating limits at section 10
Max flow	DPHL-1: **160 l/min;** DPHL-2: **300 l/min;** DPHL-4: **700 l/min;** DPHL-6: **1000 l/min** (see rated flow at section 9 and operating limits at section 10)

5 ELECTRICAL CHARACTERISTICS

Insulation class	**H** (180°C) for DC coils; **F** (155°C) for AC coils Due to the occuring surface temperatures of the solenoid coils, the European standards EN ISO 13732-1 and EN ISO 4413 must be taken into account
Protection degree to DIN EN 60529	**IP 65** with connectors correctly assembled
Relative duty factor	100%
Supply voltage and frequency	See section 6
Supply voltage tolerance	± 10%

6 COIL VOLTAGE

External supply nominal voltage ± 10%	**Voltage code**	Type of connector	Power consumption (2)	Code of spare coil **-X**
12 DC	**12 DC**	666 or 667	29W	COL-12DC
14 DC	**14 DC**			COL-14DC
24 DC	**24 DC**			COL-24DC
28 DC	**28 DC**			COL-28DC
110 DC	**110 DC**			COL-110DC
220 DC	**220 DC**			COL-220DC
110/50 AC (1)	**110/50/60 AC**		58VA (3)	COL-110/50/60AC
115/60 AC	**115/60 AC**			COL-115/60AC
230/50 AC (1)	**230/50/60 AC**			COL-230/50/60AC
230/60 AC	**230/60 AC**			COL-230/60AC
110/50 AC - 120/60 AC	**110 DC**	669	29W	COL-110DC
230/50 AC - 230/60 AC	**220 DC**			COL-220DC

(1) Coil can be supplied also with 60 Hz of voltage frequency: in this case the performances are reduced by 10÷15% and the power consumption is 55 VA
(2) Average values based on tests performed at nominal hydraulic condition and ambient/coil temperature of 20°C.
(3) When solenoid is energized, the inrush current is approx 3 times the holding current. Inrush current values correspond to a power consumption of about 150 VA.

7 OPTIONS

/A = Solenoid mounted at side of port A of main body (only for single solenoid valves).
In standard version, solenoid is mounted at side of port B.
/D = Internal drain (standard configuration is external drain)
/E = External pilot pressure (standard configuration is internal pilot pressure).
/R = Pilot pressure generator 4 bar on port P - not for DPHL-1 see section 8
/S = Main spool stroke adjustment - not for DPHL-1.
/WP = Prolonged manual override protected by rubber cap.

⚠ The manual override operation can be possible only if the pressure at T port is lower than 50 bar

FUNCTIONAL SCHEME (config. 71)
example of switching control options

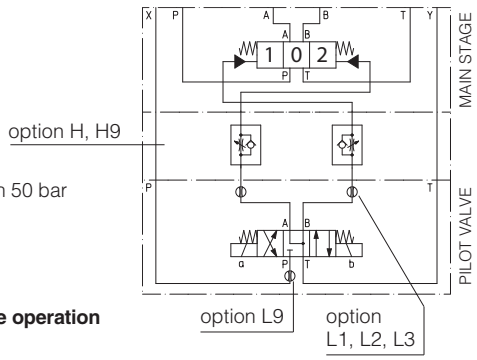

Devices for main spool switching control and to reduce the hydraulic shocks at the valve operation

/H = Adjustable chokes (meter-out to the pilot chambers of the main valve).
/H9 = Adjustable chokes (meter-in to the pilot chambers of the main valve).
/L1, /L2, /L3 = calibrated restrictors on A and B ports of the pilot valve: **L1** =0,8mm, **L2** =1mm, **L3** =1,25mm) - not for DPHL-1.
/L9 = plug with calibrated restictor in P port of pilot valve - see section 12 - only for DPHL-2 and DPHL-4.
Suggested for pilot pressure higher than 210 bar or to limit the hydraulics shocks caused by the fast main spool switching

7.1 Shaped spools

- spools type **0** and **3** are also available as **0/1** and **3/1** with restricted oil passages in central position, from user ports to tank.
- spools type **1, 4, 5, 58, 6** and **7** are also available as **1/1, 4/8, 5/1, 58/1, 6/1** and **7/1** that are properly shaped to reduce water-hammer shocks during the switching (to use with option /L*).

Shaped spool availability

Shaped spool type	0/1	3/1	1/1	4/8	5/1	58/1	6/1	7/1
Hydraulic symbol								
DPHL-1	●	●		●				
DPHL-2, DPHL-4	●	●	●	●	●	●	●	●
DPHL-6		●	●	●				

8 PILOT PRESSURE GENERATOR (OPTION /R)

The device **/R** generates an additional pressure drop, in order to ensure the minimum pilot pressure, for correct operation of the valves with internal pilot and fitted with spools type **0, 0/1, 4, 4/8, 5, 58, 09, 90, 94, 49.** The device **/R** has to be fitted when the pressure drop in the valve, verified on flow versus pressure diagrams, is lower than the minimum pilot pressure value.

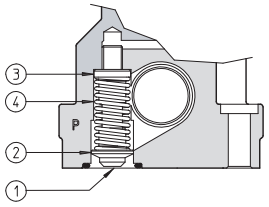

① Flapper-guide
② Flapper
③ Spring stop-washer
④ Spring

Ordering code of spare pilot pressure generator

R/DP	-	*
Pilot pressure generator		Size: **2** for DPHL-2 **4** for DPHL-4 **6** for DPHL-6

DPHL-2

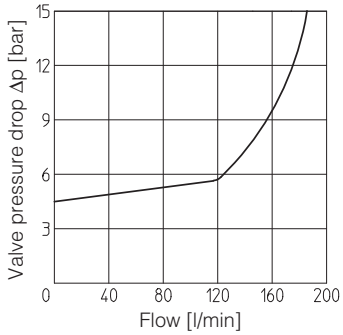

DPHL-4

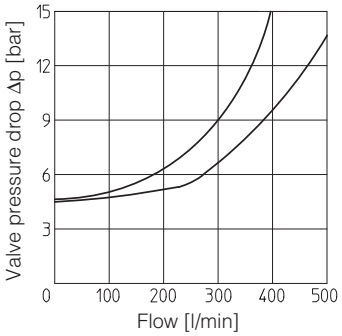

DPHL-6

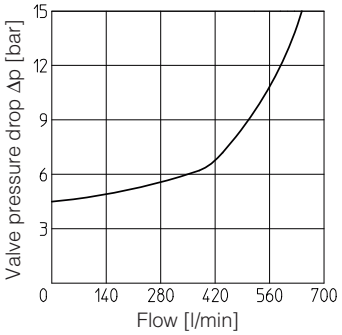

9 FLOW VERSUS PRESSURE DIAGRAMS Based on mineral oil ISO VG 46 at 50°C

DPHL-1

Spool type	Flow direction				
	P→A	P→B	A→T	B→T	P→T
0/2, 1/2	D	E	D	C	-
0	D	E	C	C	E
1	A	B	D	C	-
3, 6, 7	A	B	C	C	-
4, 4/8	B	C	D	D	-
5, 58	A	E	C	C	F

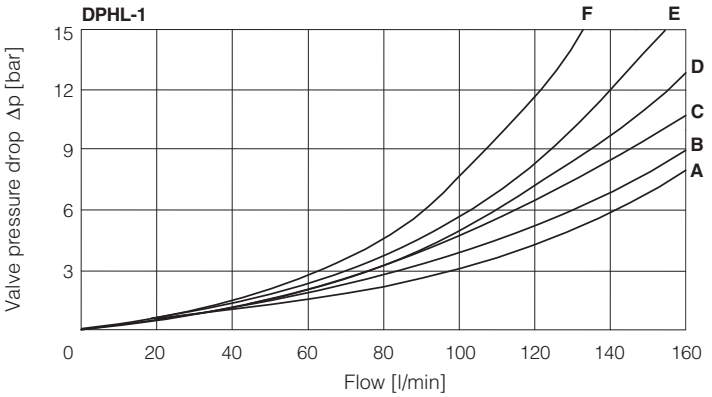

DPHL-2

Spool type	Flow direction				
	P→A	P→B	A→T	B→T	P→T
0/2, 1, 3, 6, 7, 8	A	A	C	D	-
1/1, 1/2, 7/1	B	B	D	E	-
0	A	A	D	E	C
0/1	A	A	D	-	-
2	A	A	-	-	-
2/2	B	B	-	-	-
3/1	A	A	D	D	-
4	C	C	H	I	F
4/8	C	C	G	I	F
5	A	B	F	H	G
5/1	A	B	D	F	-
6/1	B	B	C	E	-
09	A	-	-	G	-
16	A	C	D	F	-
17	C	A	E	F	-
19	C	-	-	G	-
39	C	-	-	H	-
49	-	D	-	-	-
58	B	A	F	H	H
58/1	B	A	D	F	-
90	A	A	E	-	D
91	C	C	E	-	-
93	-	C	D	-	-
94	D	-	-	-	-

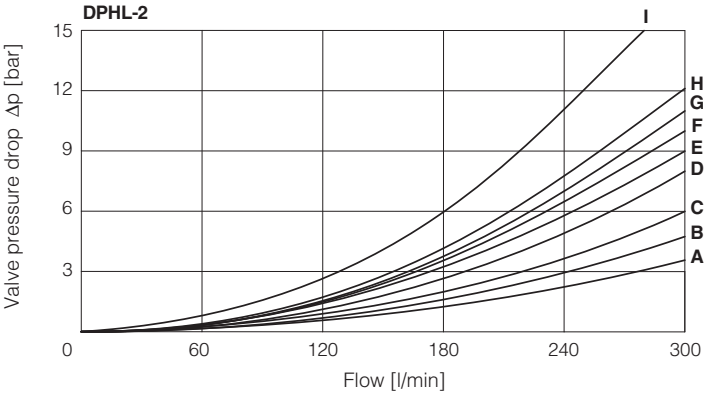

DPHL-4

Spool type	Flow direction				
	P→A	P→B	A→T	B→T	P→T
1	B	B	B	D	-
1/1	D	E	E	F	-
1/2	E	D	B	C	-
0	D	C	D	E	F
0/1, 3/1, 5/1, 6, 7	D	D	D	F	-
0/2	D	D	D	E	-
2	B	B	-	-	-
2/2	E	D	-	-	-
3	B	B	D	F	-
4	C	C	H	L	L
5	A	D	D	D	H
6/1	D	E	D	F	-
7/1	D	E	F	F	-
8	D	D	E	F	-
09	D	-	-	F	F
16	C	D	E	F	-
17	E	D	E	F	-
19	F	-	-	E	-
39	G	F	-	F	-
58	E	A	B	F	H
58/1	E	D	D	F	-
90	D	D	D	-	F
91	F	F	D		
93	-	G	D	-	-

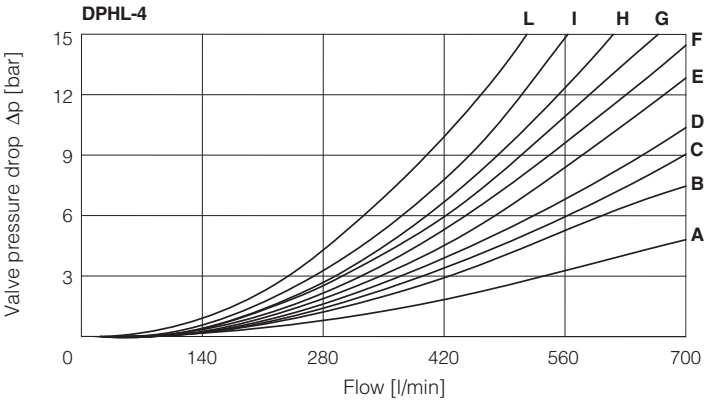

DPHL-6

Spool type	Flow direction				
	P→A	P→B	A→T	B→T	P→T
0, 0/2	A	A	B	B	B
1, 1/2	A	A	A	B	-
3, 6, 7	A	A	A	B	-
4, 5, 58	A	A	C	C	C

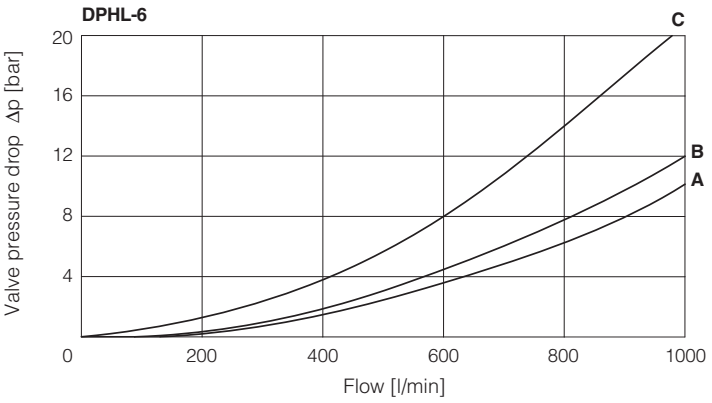

10 OPERATING LIMITS

For a correct valve operation do not exceed the max recommended flow rates (l/min) shown in the below tables

DPHL-1

Spool	Inlet pressure [bar]			
	70	160	210	350
	Flow rate [l/min]			
0, 1, 3, 6, 7	160	160	160	145
4, 4/8	160	160	135	100
5, 58	160	160	145	110
0/1, 0/2, 1/2	160	160	145	135

DPHL-2

Spool	Inlet pressure [bar]			
	70	140	210	350
	Flow rate [l/min]			
0, 1, 3, 6, 7, 8	300	300	300	300
2, 4, 4/8	300	300	240	140
5	260	220	180	100
0/1, 0/2, 1/2	300	250	210	180
16, 17, 56, *9, 9*	300	300	270	200

DPHL-4

Spool	Inlet pressure [bar]			
	70	140	210	350
	Flow rate [l/min]			
1, 6, 7, 8	700	700	700	600
2, 4, 4/8	500	500	450	400
5, 0/1, 0/2, 1/2	600	520	400	300
0, 3	700	700	600	540
16, 17, 58, *9, 9*	500	500	500	450

DPHL-6

Spool	Inlet pressure [bar]			
	70	140	210	350
	Flow rate [l/min]			
1, 3, 6, 7, 8	1000	950	850	700
0	950	900	800	650
2, 4, 4/8, 5	850	800	700	450
0/1, 58, 19, 91	950	850	650	450

11 SWITCHING TIMES (average values in m sec)

			Piloting pressure					
			70 bar		140 bar		250 bar	
Valve model	Configuration		Alternating current	Direct current	Alternating current	Direct current	Alternating current	Direct current
DPHL-1	71, 61, 67, 61*/A, 67*/A	Switch ON	35	50	30	45	20	35
		Switch OFF	50					
	63, 63*/A	Switch ON	50	75	40	65	30	50
		Switch OFF	80					
DPHL-2	71, 61, 67, 61*/A, 67*/A	Switch ON	40	55	30	50	20	40
		Switch OFF	60					
	63, 63*/A	Switch ON	55	80	45	70	35	55
		Switch OFF	95					
DPHL-4	71, 61, 67, 61*/A, 67*/A	Switch ON	60	80	45	60	30	45
		Switch OFF	80					
	63, 63*/A	Switch ON	95	115	75	95	50	65
		Switch OFF	130					
DPHL-6	71, 61, 67, 61*/A, 67*/A	Switch ON	70	95	55	70	40	55
		Switch OFF	150					
	63, 63*/A	Switch ON	115	145	95	110	70	90
		Switch OFF	280					

Notes:

1) For configuration 75, times of switching ON and switching OFF are the same: this value is equal to time of switch ON of configuration 63.

2) TEST CONDITIONS
- Nominal voltage supply DC (direct) and AC (alternating) with connector type SP-666. The use of other connectors can affect the switching time;
- 2 bar of counter pressure on port T;
- mineral oil: ISO VG 46 at 50°C

3) The response time is affected by elasticity of the hydraulic circuit, by variation of hydraulic characteristics and temperature.

12 PLUGS LOCATION FOR PILOT/DRAIN CHANNELS

Depending on the position of internal plugs, different pilot/drain configurations can be obtained as shown below.
To modify the pilot/drain configuration, proper plugs must only be interchanged. The plugs have to be sealed using loctite 270.
Standard valves configuration provides internal pilot and external drain

DPHL-1

Pilot channels

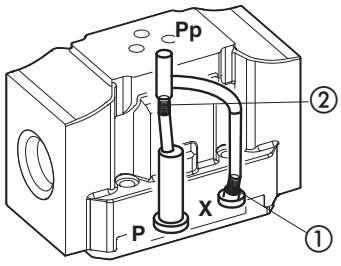

Drain channels

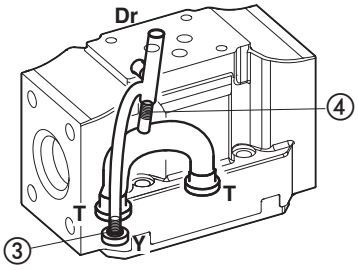

Internal piloting: blinded plug SP-X300F ① in X;
plug SP-X310F ② in Pp;
External piloting: blinded plug SP-X300F ② in Pp;
plug SP-X310F ① in X;
Internal drain: blinded plug SP-X300F ③ in Y;
External drain: blinded plug SP-X300F ④ in Dr.

DPHL-2

Pilot channels

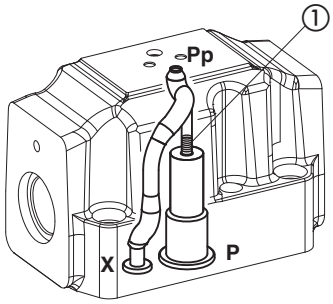

Drain channels

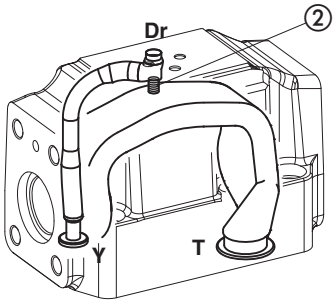

Internal piloting: Without blinded plug SP-X300F ①;
External piloting: Add blinded plug SP-X300F ①;
Internal drain: Without blinded plug SP-X300F ②;
External drain: Add blinded plug SP-X300F ②.

Option L9
This option provides a calibrated restrictor PLUG-H-12A (Ø 1,2 mm) in the P port of the pilot valve

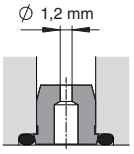

PLUG-12A

DPHL-4

Pilot channels

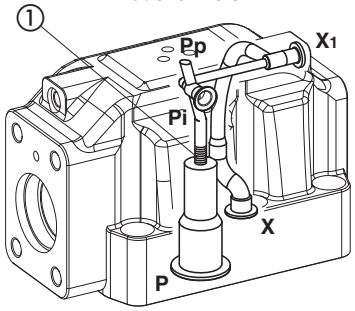

Drain channels

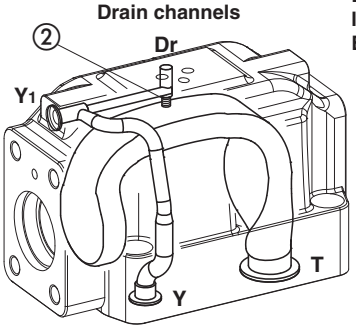

Internal piloting: Without blinded plug SP-X500F ①;
External piloting: Add blinded plug SP-X500F ①;
Internal drain: Without blinded plug SP-X300F ②;
External drain: Add blinded plug SP-X300F ②.

Option L9
This option provides a a calibrated restrictor PLUG-H-15A (Ø 1,5 mm) in the P port of the pilot valve

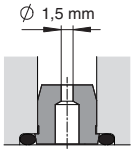

PLUG-15A

DPHL-6

Pilot channels

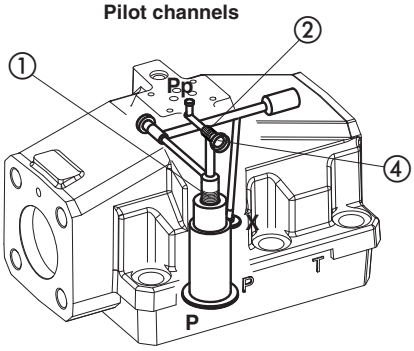

Drain channels

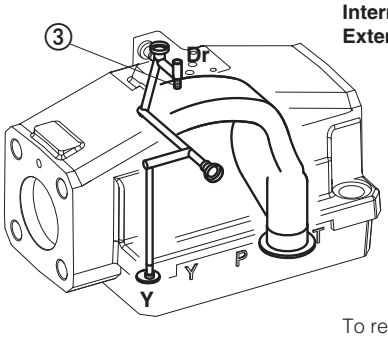

Internal piloting: Without plug ①;
plug SP-X325A in pos ②;
External piloting: Add DIN-908 M16x1,5 in pos ①;
plug SP-X325A in pos ②;
Internal drain: Without blinded plug SP-X300F ③;
External drain: Add blinded plug SP-X300F ③.

To reach the orifice ②, remove plug ④ = G 1/8”

13 ELECTRIC CONNECTORS ACCORDING TO DIN 43650 (to be ordered separately, see tech table K800)

666 = standard connector IP-65, suitable for direct connection to electric supply source
667 = as 666, but with built-in signal led. Available for power supply voltage 24 AC or DC, 110 AC or DC, 220 AC or DC
669 = with built-in rectifier bridge for supplying DC coils by alternate current (AC 110V and 230V - Imax 1A)
E-SD = electronic connector which eliminates electric disturbances when solenoid valves are de-energized

14 SEALS AND HYDRAULIC FLUID - for other fluids not included in below table, consult our technical office

Seals, reccomended fluid temperature	NBR seals (standard) = -20°C ÷ +80°C, with HFC hydraulic fluids = -20°C ÷ +50°C FKM seals (/PE option) = -20°C ÷ +80°C		
Recommended viscosity	15÷100 mm^2/s - max allowed range 2,8 ÷ 500 mm^2/s		
Max fluid contamination level	ISO4406 class 20/18/15 NAS1638 class 9, see also filter section at www.atos.com or KTF catalog		
Hydraulic fluid	**Suitable seals type**	**Classification**	**Ref. Standard**
Mineral oils	NBR, FKM	HL, HLP, HLPD, HVLP, HVLPD	DIN 51524
Flame resistant without water	FKM	HFDU, HFDR	ISO 12922
Flame resistant with water	NBR	HFC	

15 FASTENING BOLTS AND SEALS

	DPHL-1	**DPHL-2**	**DPHL-4**	**DPHL-6**
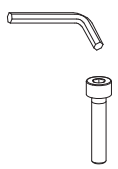	**Fastening bolts:** 4 socket head screws M6x40 class 12.9 Tightening torque = 15 Nm	**Fastening bolts:** 4 socket head screws M10x50 class 12.9 Tightening torque = 70 Nm 2 socket head screws M6x45 class 12.9 Tightening torque = 15 Nm	**Fastening bolts:** 6 socket head screws M12x60 class 12.9 Tightening torque = 125 Nm	**Fastening bolts:** 6 socket head screws M20x80 class 12.9 Tightening torque = 600 Nm
	Seals: 5 OR 2050 Diameter of ports A, B, P, T: Ø 11 mm (max) 2 OR 108 Diameter of ports X, Y: Ø 5 mm (max)	**Seals:** 4 OR 130 Diameter of ports A, B, P, T: Ø 20 mm (max) 2 OR 2043 Diameter of ports X, Y: Ø 7 mm (max)	**Seals:** 4 OR 4112 Diameter of ports A, B, P, T: Ø 24 mm (max) 2 OR 3056 Diameter of ports X, Y: Ø 7 mm (max)	**Seals:** 4 OR 144 Diameter of ports A, B, P, T: Ø 34 mm (max) 2 OR 3056 Diameter of ports X, Y: Ø 7 mm (max)

DPHL-1*

ISO 4401: 2005
Mounting surface: 4401-05-05-0-05

P = PRESSURE PORT
A, B = USE PORT
T = TANK PORT
X = EXTERNAL OIL PILOT PORT
Y = DRAIN PORT

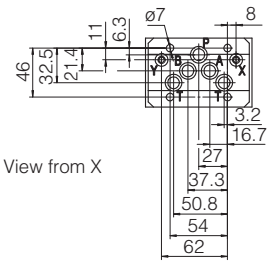

Mass (Kg)	
DPHL-16	6,9
DPHL-17	7,3
Option H, H9	+1,0

DPHL-1*/H /H9

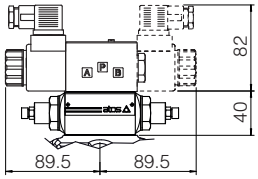

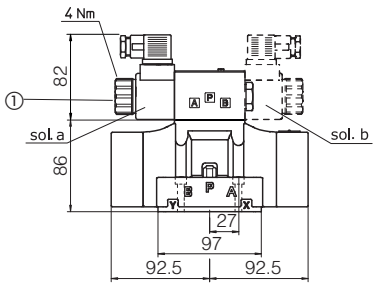

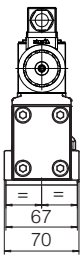

① Standard manual override PIN
Overall dimensions refer to valves **DC** voltage, with connectors type 666

DPHL-2*

ISO 4401: 2005
Mounting surface: 4401-07-07-0-05

P = PRESSURE PORT
A, B = USE PORT
T = TANK PORT
X = EXTERNAL OIL PILOT PORT
Y = DRAIN PORT

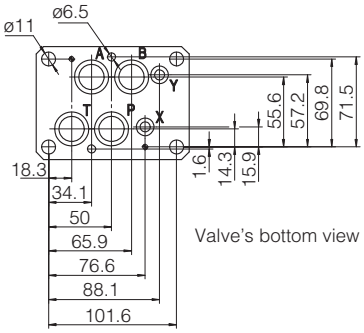

Mass (Kg)	
DPHL-26	9,7
DPHL-27	9,9
Option /S	+1,0
Option H, H9	+1,0

DPHL-2*/H

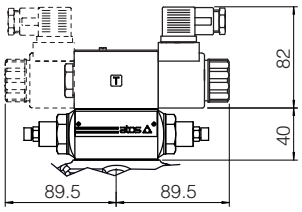

DPHL-2*

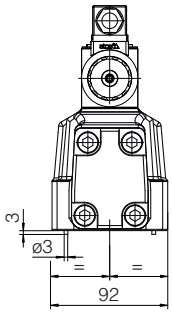

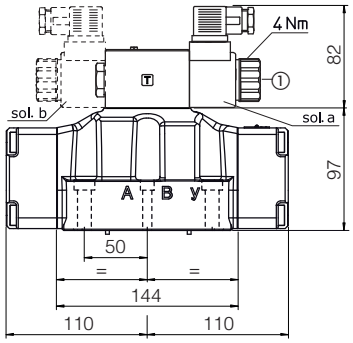

Stroke adjustment device for option /S

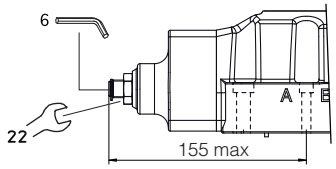

① Standard manual override PIN
Overall dimensions refer to valves **DC** voltage, with connectors type 666

DPHL-4*

ISO 4401: 2005
Mounting surface: 4401-10-09-0-05

P = PRESSURE PORT
A, B = USE PORT
T = TANK PORT
X = EXTERNAL OIL PILOT PORT
Y = DRAIN PORT

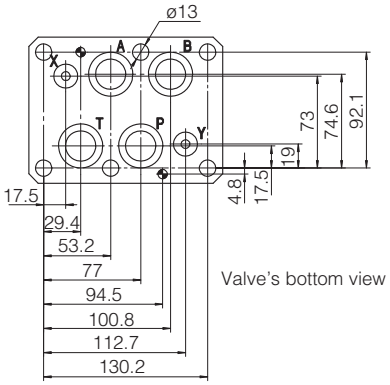

Mass (Kg)	
DPHL-46	17,2
DPHL-47	17,4
Option /S	+1,5
Option H, H9	+1,0

DPHL-4*/H

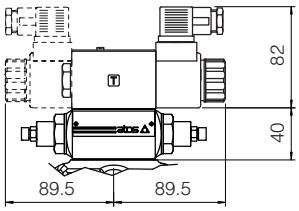

DPHL-4*

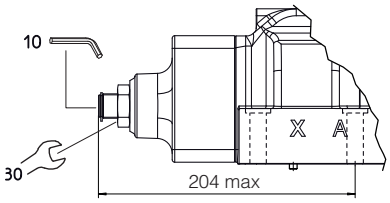

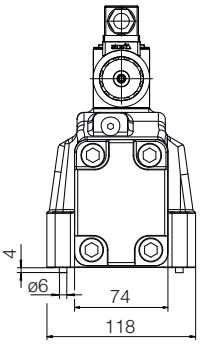

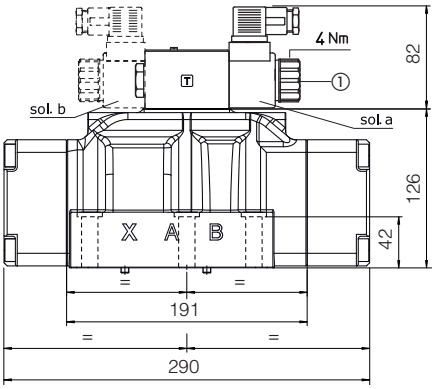

① Standard manual override PIN
Overall dimensions refer to valves **DC** voltage, with connectors type 666

DPHL-6*

ISO 4401: 2005
Mounting surface: 4401-10-09-0-05

P = PRESSURE PORT
A, B = USE PORT
T = TANK PORT
X = EXTERNAL OIL PILOT PORT
Y = DRAIN PORT

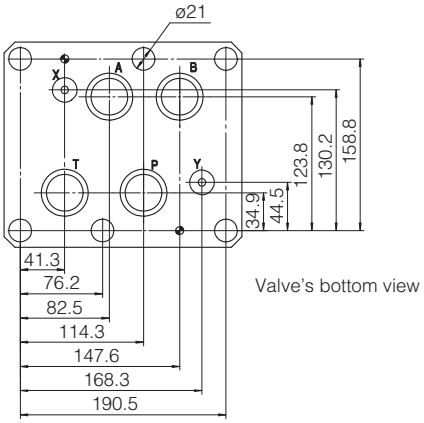

Valve's bottom view

Mass (Kg)	
DPHL-66	44
DPHL-67	44,5
Option /S	+3,5
Option H, H9	+1,0

DPHL-6*/H /H9

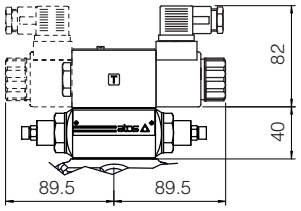

DPHL-6*

Stroke adjustment device for option/S

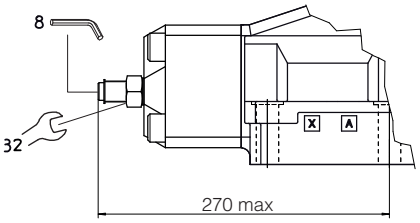

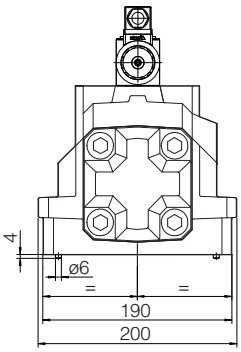

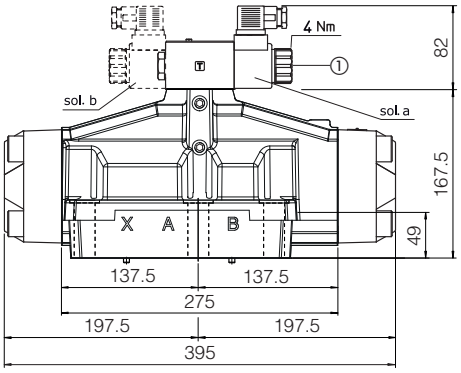

① Standard manual override PIN

Overall dimensions refer to valves **DC** voltage, with connectors type 666

17 MOUNTING SUBPLATES

Valve	Subplate model	Ports location	Ports		Ø Counterbore [mm]		Mass [Kg]
			A, B, P, T	X, Y	A, B, P, T	X, Y	
DPHL-1	BA-428	Ports A, B, P, T, X, Y underneath;	G 3/4"	G 1/4"	36,5	21,5	5,6
DPHL-1	BA-434	Ports P, T, X, Y underneath; ports A, B on lateral side	G 3/4"	G 1/4"	36,5	21,5	5,5
DPHL-2	BA-418	Ports A, B, P, T, X, Y underneath;	G 3/4"	G 1/4"	36,5	21,5	3,5
DPHL-2	BA-518	Ports A, B, P, T, X, Y underneath;	G 1"	G 1/4"	46	21,5	8
DPHL-2	BA-519	Ports P, T, X, Y underneath; ports A, B on lateral side	G 1"	G 1/4"	46	21,5	8
DPHL-4	BA-508	Ports A, B, P, T, X, Y underneath;	G 1"	G 1/4"	46	21,5	7
DPHL-4	BA-509	Ports P, T, X, Y underneath; ports A, B on lateral	G 1"	G 1/4"	46	21,5	12,5
DPHL-6	BA-708	Ports A, B, P, T, X, Y underneath;	G 1 1/2"	G 1/4"	63,5	21,5	17

Solenoid directional valves type DPHE

piloted, spool type

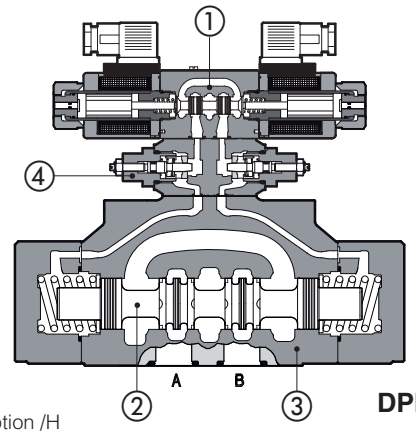

① Solenoid pilot valve
② Main spool
③ Main body
④ Adjustable chokes - option /H

DPHE-471*/H

Spool type, pilot operated directional solenoid valves available in 4/3, 4/2, 3/2 way versions.
They are operated by a directional valve ① type DHE (see tech. table E015) equipped with high performance solenoids for AC or DC power supply, certified according to North American standard **cURus**.
Spools ② are fully interchangeable and they are available in a wide range of hydraulic configurations.
The valve body is made by shell-moulding castings ③ with wide internal passages ensuring low pressure drops.

Mounting surface: **ISO 4401, size 10, 16, 25, 32**
Max flow: **160, 300, 700, 1000 l/min.**
Max pressure: **350 bar**

1 MODEL CODE

DPH	E	-	2	61	1	/	A	-	X	24 DC	*	/	*

Piloted directional valve

Solenoid pilot valve:
E = DHE for AC and DC supply, high performances with **cURus** certified solenoids

Valve size:
1 = 10 **2** = 16 **4** = 25 **6** = 32

Valve configuration, see section 2
61= single solenoid, center plus external position, spring centered
63= single solenoid, 2 external positions, spring offset
67= single solenoid, center plus external position, spring offset
70= double solenoid, 2 external positions, without springs
71= double solenoid, 3 positions, spring centered
75= double solenoid, 2 external positions, with detent

Spool type, see section 2.

Options, see note 1 at section 7

00-AC = AC solenoids without coils
00-DC = DC solenoids without coils
X = without connector
See section 13 for available connectors, to be ordered separately

Voltage code, see section 6

Series number

Seals material, see section 14 :
- = NBR
PE = FKM
BT = HNBR

2 CONFIGURATIONS and SPOOLS (representation according to ISO 1219-1)

Configurations

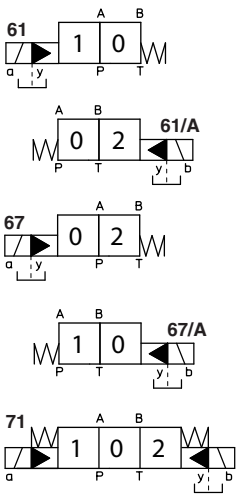

Spools

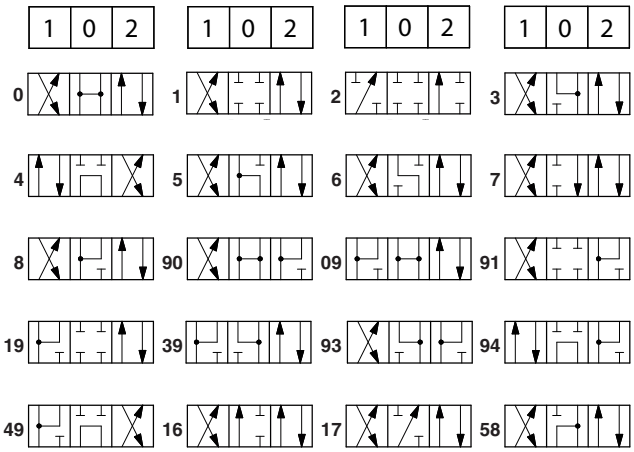

NOTES (see also section 7,2 for special shaped spools):
- For **DP*-1** are available only spools: **0, 0/2, 1, 1/2, 3, 4, 5, 58, 6, 7**
- For **DP*-6** are available only spools: **0, 1, 1/2, 2, 3, 4, 5, 58, 6, 7, 8, 19, 91**

Configurations

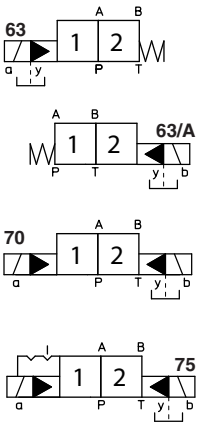

Spools

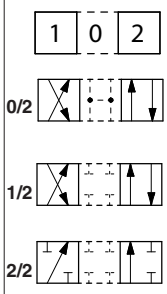

3 GENERAL CHARACTERISTICS

Assembly position	Any position
Subplate surface finishing to ISO 4401	Acceptable roughness index, Ra £0,8 recommended Ra 0,4 - flatness ratio 0,01/100
MTTFd valves according to EN ISO 13849	75 years, for further details see technical table P007
Ambient temperature range	**Standard** = -30°C ÷ +70°C **/PE** option = -20°C ÷ +70°C **/BT** option = -40°C ÷ +70°C
Storage temperature range	**Standard** = -30°C ÷ +80°C **/PE** option = -20°C ÷ +80°C **/BT** option = -40°C ÷ +80°C
Surface protection	Body: zinc coating with black passivation Coil: zinc nickel coating (DC version) plastic incapsulation (AC version)
Corrosion resistance	Salt spray test (EN ISO 9227) > 200 h
Compliance	CE to Low Voltage Directive 2014/35/EU RoHS Directive 2011/65/EU as last update by 2015/863/EU REACH Regulation (EC) n°1907/2006

4 HYDRAULIC CHARACTERISTICS

Flow direction	As shown in the symbols of table 2
Operating pressure	Ports P,A,B: **350** bar; Port T **210** bar for DC version; **160** bar for AC version
Rated flow	See Q/Dp diagram at section 9 and operating limits at section 10
Max flow	DPHE-1: **160 l/min;** DPHE-2: **300 l/min;** DPHE-4: **700 l/min;** DPHE-6: **1000 l/min** see rated flow at section 9 and operating limits at section 10

5 ELECTRICAL CHARACTERISTICS

Insulation class	**H** (180°C) for DC coils; **F** (155°C) for AC coils Due to the occurring surface temperatures of the solenoid coils, the European standards EN ISO 13732-1 and EN ISO 4413 must be taken into account
Protection degree to DIN EN 60529	**IP 65** with connectors correctly assembled
Relative duty factor	100%
Supply voltage and frequency	See section 6
Supply voltage tolerance	± 10%

6 COIL VOLTAGE

Valve code	External supply nominal voltage ± 10%	**Voltage code**	Type of connector	Power consumption (2)	Code of spare coil DHE
DPHE	12 DC	**12 DC**	666 or 667	30 W	COE-12DC
	14 DC	**14 DC**			COE-14DC
	24 DC	**24 DC**			COE-24DC
	28 DC	**28 DC**			COE-28DC
	48 DC	**48 DC**			COE-48DC
	110 DC	**110 DC**			COE-110DC
	125 DC	**125 DC**			COE-125DC
	220 DC	**220 DC**			COE-220DC
	24/50 AC	**24/50/60 AC**		58 VA (3)	COE-24/50/60AC (1)
	48/50 AC	**48/50/60 AC**			COE-48/50/60AC (1)
	110/50 AC	**110/50/60 AC**			COE-110/50/60AC (1)
	230/50 AC	**230/50/60 AC**			COE-230/50/60AC (1)
	115/50 AC	**115/60 AC**		80 VA (3)	COE-115/60AC
	230/50 AC	**230/60 AC**			COE-230/60AC
	110/50 AC - 120/60 AC	**110 RC**	669	30 W	COE-110RC
	230/50 AC - 230/60 AC	**230 RC**			COE-230RC

(1) Coil can be supplied also with 60 Hz of voltage frequency: in this case the performances are reduced by 10 ÷15% and the power consumption is 52 VA.
(2) Average values based on tests preformed at nominal hydraulic condition and ambient/coil temperature of 20°C.
(3) When solenoid is energized, the inrush current is approx 3 times the holding current.

7 OPTIONS

7.1 Options

/A = Solenoid mounted at side of port A of main body (only for single solenoid valves).
In standard version, solenoid is mounted at side of port B.

/D = Internal drain (standard configuration is external drain)

/E = External pilot pressure (standard configuration is internal pilot pressure).

/FV = With proximity switch for spool position monitoring: see tab. EY030.

/R = Pilot pressure generator (4 bar on port P - not for DPHE-1, see section 8.

/S = Main spool stroke adjustment (not for DPHE-1).

/WP = Prolonged manual override protected by rubber cap.

⚠ The manual override operation can be possible only if the pressure at T port is lower than 50 bar

FUNCTIONAL SCHEME (config. 71)
example of switching control options

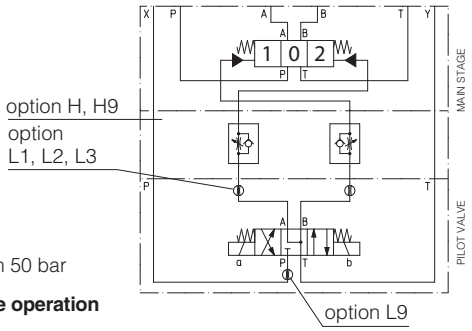

Devices for main spool switching control and to reduce the hydraulic shocks at the valve operation

/H = Adjustable chokes (meter-out to the pilot chambers of the main valve).

/H9 = Adjustable chokes (meter-in to the pilot chambers of the main valve).

/L1, /L2, /L3 = calibrated restrictors on A and B ports of the pilot valve: **L1** =0,8mm, **L2** =1mm, **L3** =1,25mm)

/L9 = (only for DPHE-2 and DPHE-4) plug with calibrated restictor in P port of pilot valve - see section 12
Suggested for pilot pressure higher than 210 bar or to limit the hydraulics shocks caused by the fast main spool switching

7.2 Special shaped spools

- spools type **0** and **3** are also available as **0/1** and **3/1** with restricted oil passages in central position, from user ports to tank.
- spools type **1, 4, 5, 58, 6** and **7** are also available as **1/1, 4/8, 5/1, 58/1, 6/1** and **7/1** that are properly shaped to reduce water-hammer shocks during the switching (to use with option /L*).

Shaped spool availability

Shaped spool type	0/1	3/1	1/1	4/8	5/1	58/1	6/1	7/1
Hydraulic symbol	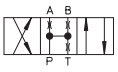	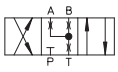	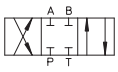	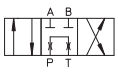	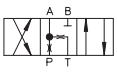	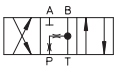	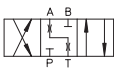	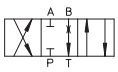
DPHE-1	●	●		●				
DPHE-2, DPHE-4	●	●	●	●	●	●	●	●
DPHE-6		●	●	●				

8 PILOT PRESSURE GENERATOR (OPTION /R)

The device **/R** generates an additional pressure drop, in order to ensure the minimum pilot pressure, for correct operation of the valves with internal pilot and fitted with spools type **0, 0/1, 4, 4/8, 5, 58, 09, 90, 94, 49.** The device **/R** has to be fitted when the pressure drop in the valve, verified on flow versus pressure diagrams, is lower than the minimum pilot pressure value.

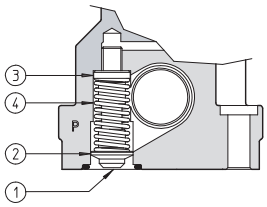

① Flapper-guide
② Flapper
③ Spring stop-washer
④ Spring

Ordering code of spare pilot pressure generator

R/DP	-	*
Pilot pressure generator		Size: **2** for DPHE-2 **4** for DPHE-4 **6** for DPHE-6

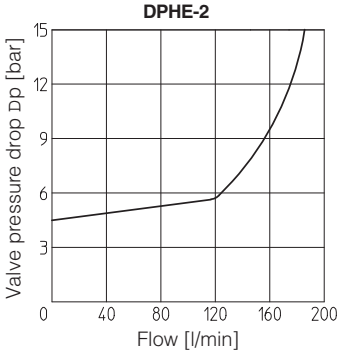

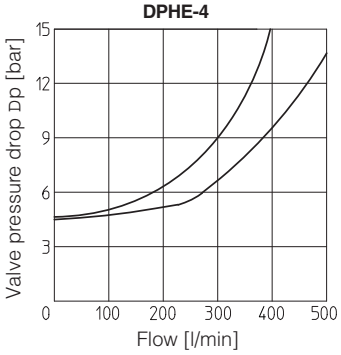

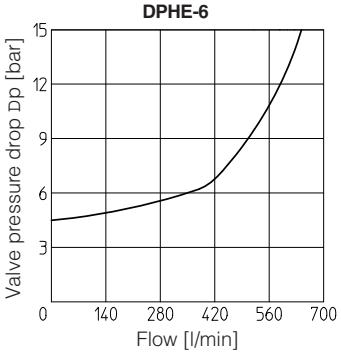

9 FLOW VERSUS PRESSURE DIAGRAMS Based on mineral oil ISO VG 46 at 50°C

DPHE-1

Spool type \ Flow direction	P→A	P→B	A→T	B→T	P→T
0/2, 1/2	D	E	D	C	-
0	D	E	C	C	E
1	A	B	D	C	-
3, 6, 7	A	B	C	C	-
4, 4/8	B	C	D	D	-
5, 58	A	E	C	C	F

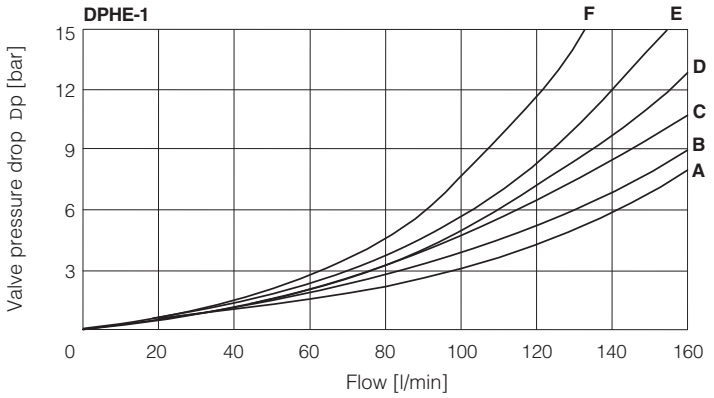

DPHE-2

Spool type \ Flow direction	P→A	P→B	A→T	B→T	P→T
0/2, 1, 3, 6, 7, 8	A	A	C	D	-
1/1, 1/2, 7/1	B	B	D	E	-
0	A	A	D	E	C
0/1	A	A	D	-	-
2	A	A	-	-	-
2/2	B	B	-	-	-
3/1	A	A	D	D	-
4	C	C	H	I	F
4/8	C	C	G	I	F
5	A	B	F	H	G
5/1	A	B	D	F	-
6/1	B	B	C	E	-
09	A	-	-	G	-
16	A	C	D	F	-
17	C	A	E	F	-
19	C	-	-	G	-
39	C	-	-	H	-
49	-	D	-	-	-
58	B	A	F	H	H
58/1	B	A	D	F	-
90	A	A	E	-	D
91	C	C	E	-	-
93	-	C	D	-	-
94	D	-	-	-	-

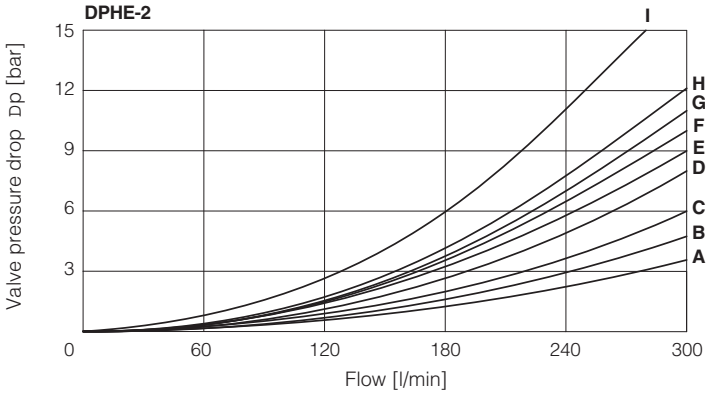

DPHE-4

Spool type \ Flow direction	P→A	P→B	A→T	B→T	P→T
1	B	B	B	D	-
1/1	D	E	E	F	-
1/2	E	D	B	C	-
0	D	C	D	E	F
0/1, 3/1, 5/1, 6, 7	D	D	D	F	-
0/2	D	D	D	E	-
2	B	B	-	-	-
2/2	E	D	-	-	-
3	B	B	D	F	-
4	C	C	H	L	L
5	A	D	D	D	H
6/1	D	E	D	F	-
7/1	D	E	F	F	-
8	D	D	E	F	-
09	D	-	-	F	F
16	C	D	E	F	-
17	E	D	E	F	-
19	F	-	-	E	-
39	G	F	-	F	-
58	E	A	B	F	H
58/1	E	D	D	F	-
90	D	D	D	-	F
91	F	F	D		
93	-	G	D	-	-

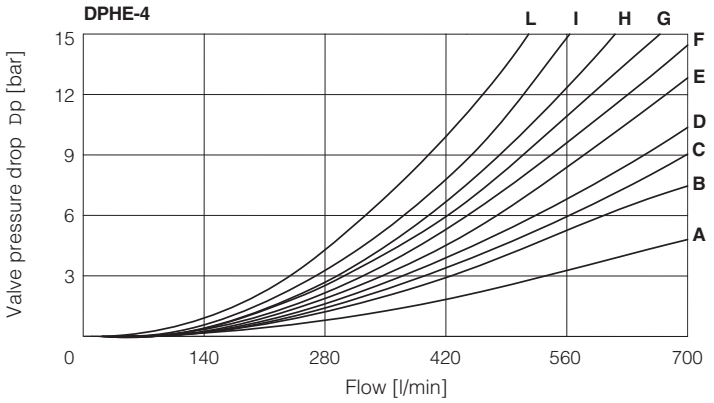

DPHE-6

Spool type \ Flow direction	P→A	P→B	A→T	B→T	P→T
0	A	A	B	B	B
1	A	A	A	B	-
3	A	-	A	B	-
4	A	A	C	C	C

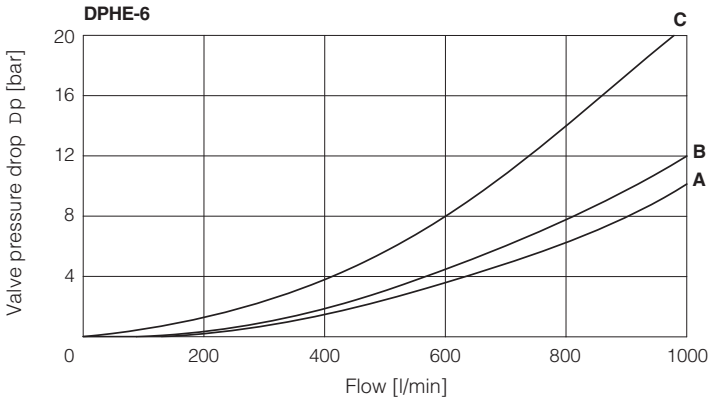

10 OPERATING LIMITS

For a correct valve operation do not exceed the max recommended flow rates (l/min) shown in the below tables

DPHE-1

Spool	Inlet pressure [bar]			
	70	160	210	350
	Flow rate [l/min]			
0, 1, 3, 6, 7	160	160	160	145
4, 4/8	160	160	135	100
5, 58	160	160	145	110
0/1, 0/2, 1/2	160	160	145	135

DPHE-2

Spool	Inlet pressure [bar]			
	70	140	210	350
	Flow rate [l/min]			
0, 1, 3, 6, 7, 8	300	300	300	300
2, 4, 4/8	300	300	240	140
5	260	220	180	100
0/1, 0/2, 1/2	300	250	210	180
16, 17, 56, *9, 9*	300	300	270	200

DPHE-4

Spool	Inlet pressure [bar]			
	70	140	210	350
	Flow rate [l/min]			
1, 6, 7, 8	700	700	700	600
2, 4, 4/8	500	500	450	400
5, 0/1, 0/2, 1/2	600	520	400	300
0, 3	700	700	600	540
16, 17, 58, *9, 9*	500	500	500	450

DPHE-6

Spool	Inlet pressure [bar]			
	70	140	210	350
	Flow rate [l/min]			
1, 3, 6, 7, 8	1000	950	850	700
0	950	900	800	650
2, 4, 4/8, 5	850	800	700	450
0/1, 58, 19, 91	950	850	650	450

11 SWITCHING TIMES (average values in m sec)

			Piloting pressure 70 bar		140 bar		250 bar	
Valve model	Configuration		Alternating current	Direct current	Alternating current	Direct current	Alternating current	Direct current
DPHE-1	71, 61, 67, 61*/A, 67*/A	Switch ON	35	50	30	45	20	35
		Switch OFF	50					
	63, 63*/A	Switch ON	50	75	40	65	30	50
		Switch OFF	80					
DPHE-2	71, 61, 67, 61*/A, 67*/A	Switch ON	40	55	30	50	20	40
		Switch OFF	60					
	63, 63*/A	Switch ON	55	80	45	70	35	55
		Switch OFF	95					
DPHE-4	71, 61, 67, 61*/A, 67*/A	Switch ON	60	80	45	60	30	45
		Switch OFF	80					
	63, 63*/A	Switch ON	95	115	75	95	50	65
		Switch OFF	130					
DPHE-6	71, 61, 67, 61*/A, 67*/A	Switch ON	70	95	55	70	40	55
		Switch OFF	150					
	63, 63*/A	Switch ON	115	145	95	110	70	90
		Switch OFF	280					

Notes:

1) For configuration 75, times of switching ON and switching OFF are the same: this value is equal to time of switch ON of configuration 63.

2) TEST CONDITIONS
- Nominal voltage supply DC (direct) and AC (alternating) with connector type SP-666. The use of other connectors can affect the switching time;
- 2 bar of counter pressure on port T;
- mineral oil: ISO VG 46 at 50°C

3) The response time is affected by elasticity of the hydraulic circuit, by variation of hydraulic characteristics and temperature.

12 PLUGS LOCATION FOR PILOT/DRAIN CHANNELS

Depending on the position of internal plugs, different pilot/drain configurations can be obtained as shown below.
To modify the pilot/drain configuration, proper plugs must only be interchanged. The plugs have to be sealed using loctite 270.
Standard valves configuration provides internal pilot and external drain

DPHE-1

Pilot channels

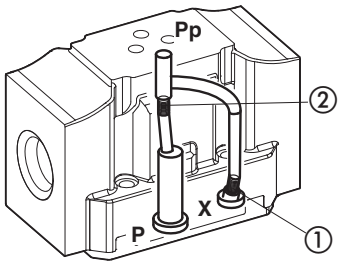

Drain channels

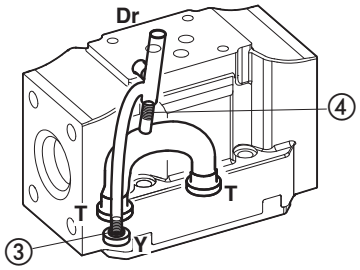

Internal piloting: blinded plug SP-X300F ① in X;
plug SP-X310F ② in Pp;
External piloting: blinded plug SP-X300F ② in Pp;
plug SP-X310F ① in X;
Internal drain: blinded plug SP-X300F ③ in Y;
External drain: blinded plug SP-X300F ④ in Dr.

DPHE-2

Pilot channels

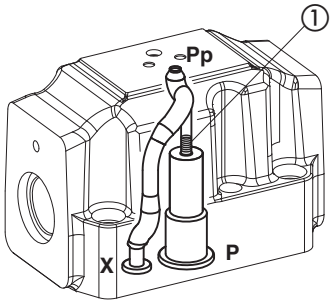

Drain channels

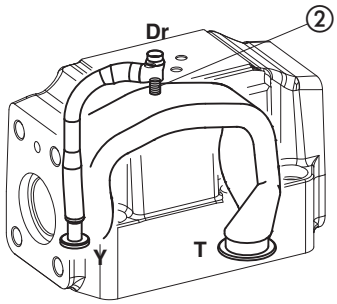

Internal piloting: Without blinded plug SP-X300F ①;
External piloting: Add blinded plug SP-X300F ①;
Internal drain: Without blinded plug SP-X300F ②;
External drain: Add blinded plug SP-X300F ②.

Option L9
This option provides a calibrated restrictor PLUG-H-12A (Ø 1,2 mm) in the P port of the pilot valve

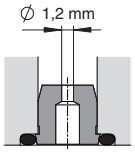

PLUG-12A

DPHE-4

Pilot channels

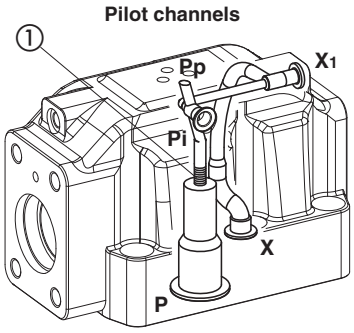

Drain channels

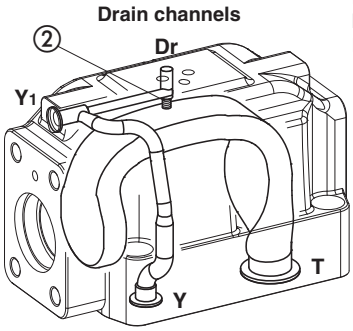

Internal piloting: Without blinded plug SP-X500F ①;
External piloting: Add blinded plug SP-X500F ①;
Internal drain: Without blinded plug SP-X300F ②;
External drain: Add blinded plug SP-X300F ②.

Option L9
This option provides a a calibrated restrictor PLUG-H-15A (Ø 1,5 mm) in the P port of the pilot valve

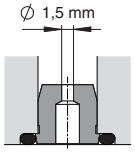

PLUG-15A

DPHE-6

Pilot channels

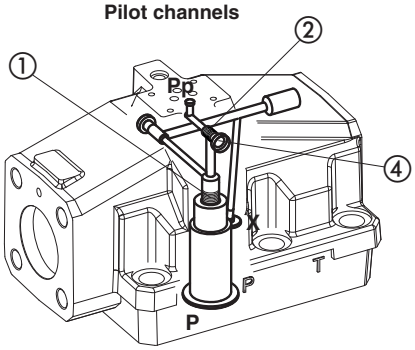

Drain channels

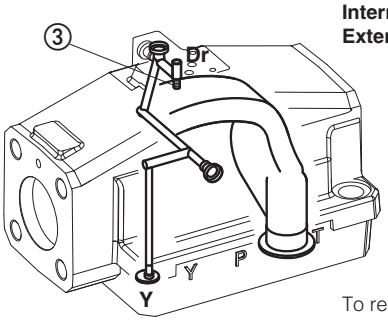

Internal piloting: Without plug ①;
plug SP-X325A in pos ②;
External piloting: Add DIN-908 M16x1,5 in pos ①;
plug SP-X325A in pos ②;
Internal drain: Without blinded plug SP-X300F ③;
External drain: Add blinded plug SP-X300F ③.

To reach the orifice ②, remove plug ④ = G 1/8”

13 ELECTRIC CONNECTORS ACCORDING TO DIN 43650 (to be ordered separately, see tech table K800)

666 = standard connector IP-65, suitable for direct connection to electric supply source
667 = as 666, but with built-in signal led. Available for power supply voltage 24 AC or DC, 110 AC or DC, 220 AC or DC
669 = with built-in rectifier bridge for supplying DC coils by alternate current (AC 110V and 230V - Imax 1A)
E-SD = electronic connector which eliminates electric disturbances when solenoid valves are de-energized

14 SEALS AND HYDRAULIC FLUID - for other fluids not included in below table, consult our technical office

Seals, recommended fluid temperature	NBR seals (standard) = -20°C ÷ +80°C, with HFC hydraulic fluids = -20°C ÷ +50°C FKM seals (/PE option) = -20°C ÷ +80°C HNBR seals (/BT option) = -40°C ÷ +60°C, with HFC hydraulic fluids = -40°C ÷ +50°C		
Recommended viscosity	15÷100 mm^2/s - max allowed range 2,8 ÷ 500 mm^2/s		
Max fluid contamination level	ISO4406 class 20/18/15 NAS1638 class 9, see also filter section at www.atos.com or KTF catalog		
Hydraulic fluid	**Suitable seals type**	**Classification**	**Ref. Standard**
Mineral oils	NBR, FKM, HNBR	HL, HLP, HLPD, HVLP, HVLPD	DIN 51524
Flame resistant without water	FKM	HFDU, HFDR	ISO 12922
Flame resistant with water	NBR, HNBR	HFC	

15 FASTENING BOLTS AND SEALS

	DPHE-1	**DPHE-2**	**DPHE-4**	**DPHE-6**
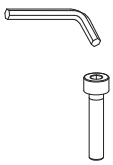	**Fastening bolts:** 4 socket head screws M6x40 class 12.9 Tightening torque = 15 Nm	**Fastening bolts:** 4 socket head screws M10x50 class 12.9 Tightening torque = 70 Nm 2 socket head screws M6x45 class 12.9 Tightening torque = 15 Nm	**Fastening bolts:** 6 socket head screws M12x60 class 12.9 Tightening torque = 125 Nm	**Fastening bolts:** 6 socket head screws M20x80 class 12.9 Tightening torque = 600 Nm
	Seals: 5 OR 2050 Diameter of ports A, B, P, T: Ø 11 mm (max) 2 OR 108 Diameter of ports X, Y: Ø 5 mm (max)	**Seals:** 4 OR 130 Diameter of ports A, B, P, T: Ø 20 mm (max) 2 OR 2043 Diameter of ports X, Y: Ø 7 mm (max)	**Seals:** 4 OR 4112 Diameter of ports A, B, P, T: Ø 24 mm (max) 2 OR 3056 Diameter of ports X, Y: Ø 7 mm (max)	**Seals:** 4 OR 144 Diameter of ports A, B, P, T: Ø 34 mm (max) 2 OR 3056 Diameter of ports X, Y: Ø 7 mm (max)

16 INSTALLATION DIMENSIONS [mm]

DPHE-1*

ISO 4401: 2005
Mounting surface: 4401-05-05-0-05

P = PRESSURE PORT
A, B = USE PORT
T = TANK PORT
X = EXTERNAL OIL PILOT PORT
Y = DRAIN PORT

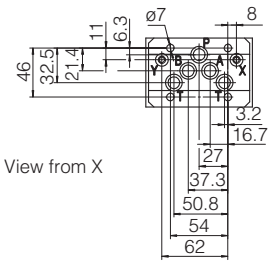

View from X

Mass (Kg)	
DPHE-16	6,9
DPHE-17	7,3
Option H, H9	+1,0

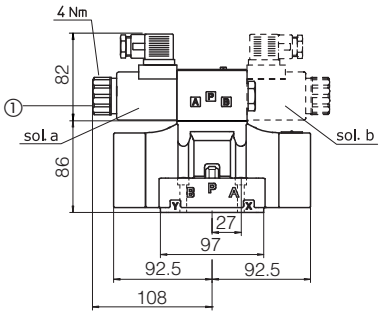

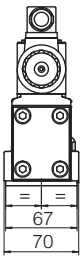

DPHE-1*/H /H9

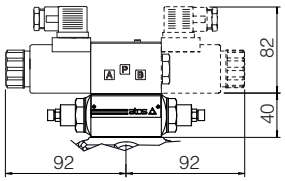

① Standard manual override PIN

Overall dimensions refer to valves **DC** voltage, with connectors type 666

DPHE-2*

ISO 4401: 2005
Mounting surface: 4401-07-07-0-05

P = PRESSURE PORT
A, B = USE PORT
T = TANK PORT
X = EXTERNAL OIL PILOT PORT
Y = DRAIN PORT

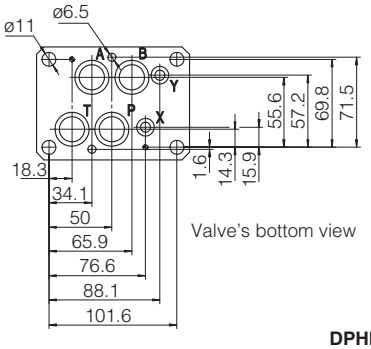

Valve's bottom view

Mass (Kg)	
DPHE-26	9,9
DPHE-27	10,3
Option /S	+1,0
Option H, H9	+1,0

DPHE-2*/H /H9

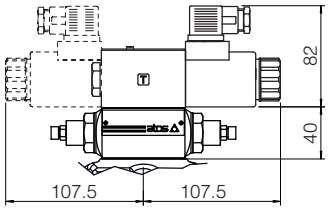

Stroke adjustment device for option /S

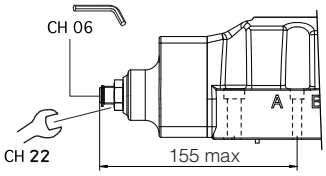

DPHE-2*

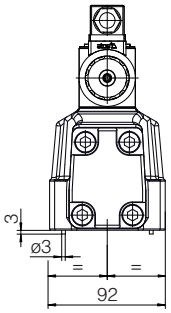

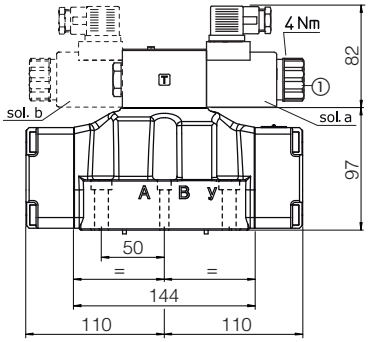

① Standard manual override PIN

Overall dimensions refer to valves **DC** voltage, with connectors type 666

DPHE-4*

ISO 4401: 2005
Mounting surface: 4401-08-08-0-05 (see table P005)

P = PRESSURE PORT
A, B = USE PORT
T = TANK PORT
X = EXTERNAL OIL PILOT PORT
Y = DRAIN PORT

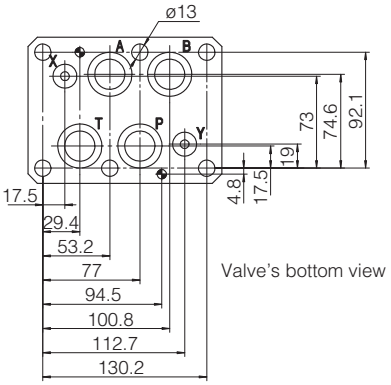

Mass (Kg)	
DPHE-46	17,4
DPHE-47	17,8
Option /S	+1,5
Option H, H9	+1,0

DPHE-4*/H /H9

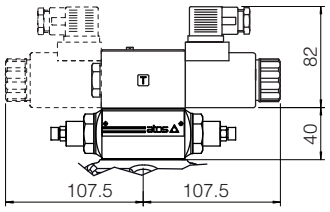

DPHE-4*

Stroke adjustment device for option /S

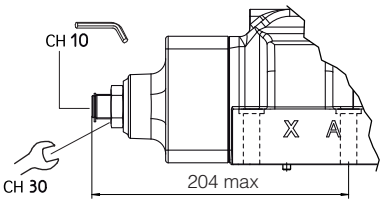

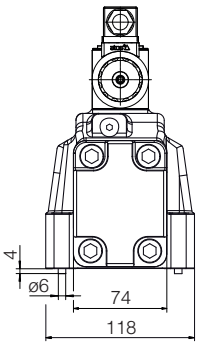

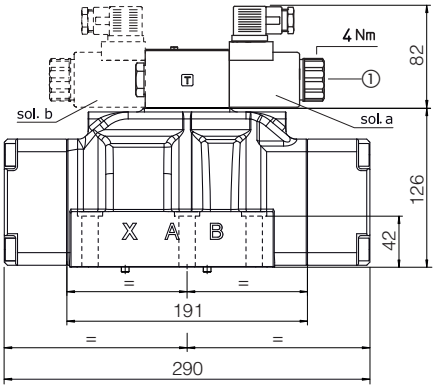

① Standard manual override PIN

Overall dimensions refer to valves **DC** voltage, with connectors type 666

DPHE-6*

ISO 4401: 2005
Mounting surface: 4401-10-09-0-05

P = PRESSURE PORT
A, B = USE PORT
T = TANK PORT
X = EXTERNAL OIL PILOT PORT
Y = DRAIN PORT

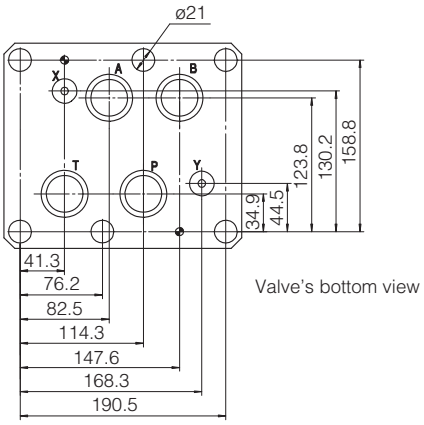

Valve's bottom view

Mass (Kg)	
DPHE-66	44
DPHE-67	44,5
Option /S	+3,5
Option H, H9	+1,0

DPHE-6*/H /H9

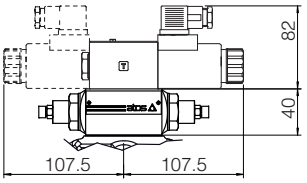

DPHE-6*

Stroke adjustment device for option/S

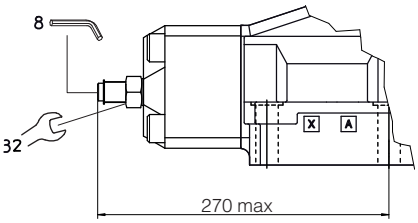

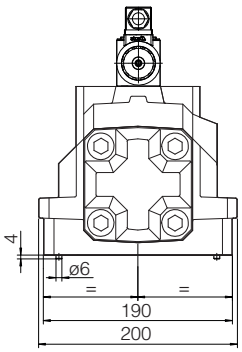

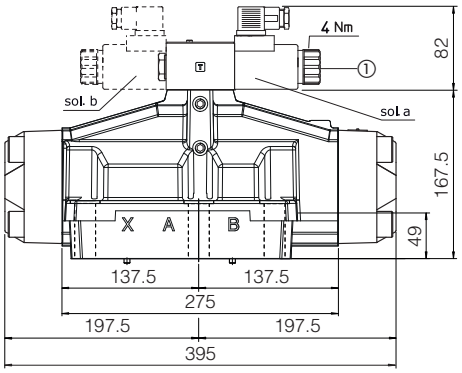

① Standard manual override PIN

Overall dimensions refer to valves **DC** voltage, with connectors type 666

17 MOUNTING SUBPLATES

Valve	Subplate model	Ports location	Ports		Ø Counterbore [mm]		Mass [Kg]
			A, B, P, T	X, Y	A, B, P, T	X, Y	
DPHE-1	BA-428	Ports A, B, P, T, X, Y underneath;	G 3/4"	G 1/4"	36,5	21,5	5,6
DPHE-1	BA-434	Ports P, T, X, Y underneath; ports A, B on lateral side	G 3/4"	G 1/4"	36,5	21,5	5,5
DPHE-2	BA-418	Ports A, B, P, T, X, Y underneath;	G 3/4"	G 1/4"	36,5	21,5	3,5
DPHE-2	BA-518	Ports A, B, P, T, X, Y underneath;	G 1"	G 1/4"	46	21,5	8
DPHE-2	BA-519	Ports P, T, X, Y underneath; ports A, B on lateral side	G 1"	G 1/4"	46	21,5	8
DPHE-4	BA-508	Ports A, B, P, T, X, Y underneath;	G 1"	G 1/4"	46	21,5	7
DPHE-4	BA-509	Ports P, T, X, Y underneath; ports A, B on lateral	G 1"	G 1/4"	46	21,5	12,5
DPHE-6	BA-708	Ports A, B, P, T, X, Y underneath;	G 1 1/2"	G 1/4"	63,5	21,5	17

Solenoid directional valves type DLEH and DLEHM

direct, poppet type, leak free

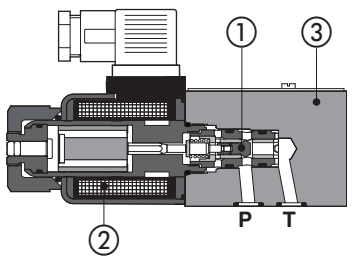

DLEH-2A

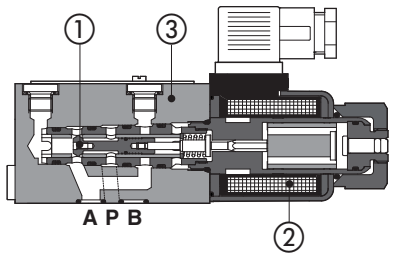

DLEHM-3A

Poppet type ① direct operated valves, designed for applications in oil hydraulic systems with leak free requirements.

Following models are available in a wide range of configurations, see section 2

size 06 subplate version

- **DLEH**: two and three way execution, Qmax 12 l/min
- **DLEHM**: three way execution, Qmax 30 l/min

M20 screw-in cartridge version for easy assembling in hydraulic blocks

- **CART LEH**: two and three way execution, Qmax 12 l/min
- **CART LEHM**: three way execution, Qmax 30 l/min

They are operated by wet type, screwed solenoids ② for DC or RC (rectified) current supply and certified according to the North American standard **cURus**

Standard coils protection **IP65**

Max flow: **12 l/min (DLEH, LEH)**
30 l/min (DLEHM, LEHM)

Max pressure: **350 bar (DLEH, LEH)**
315 bar (DLEHM, LEHM)

1 MODEL CODE

DLEH - **2** **A** / **WP** - **X** **24 DC** ***** / *****

Directional control valve poppet type:
DLEH = ISO size 06, max flow: 12 l/min
DLEHM = ISO size 06, max flow: 30 l/min
CART LEH = cartridge version max flow12 l/min
CART LEHM = cartridge version max flow 30 l/min

2 = two way (only DLEH and LEH)
3 = three way

Valve configuration, see table 2

Options, see section 4

00-DC = DC solenoids without coils
X = without connector
See section 5 for available connectors, to be ordered separately

Voltage code, see section 6

Series number

Seals material, see section 3:
- = NBR
PE = FKM
BT = HNBR

2 VALVE CONFIGURATION

DLEH-2A **CART LEH-2A**	**DLEH-2A/R**	**DLEH-2C** **CART LEH-2C**	**DLEH-2C/R**	**DLEHM-3A** **CART LEHM-3A**
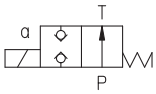	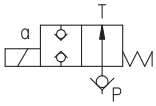	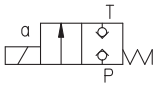	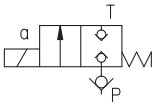	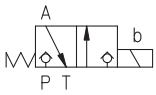
DLEH-3A **CART LEH-3A**	**DLEH-3A/R**	**DLEH-3C** **CART LEH-3C**	**DLEH-3C/R**	**DLEHM-3C** **CART LEHM-3C**
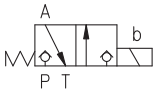	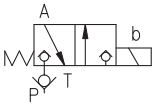	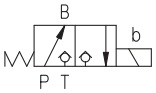	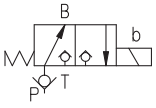	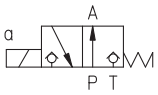

3 MAIN CHARACTERISTICS, SEALS AND HYDRAULIC FLUIDS - for other fluids not included in below table, consult our technical office

Assembly position / location	Any position		
Subplate surface finishing	Roughness index Ra 0,4 - flatness ratio 0,01/100 (ISO 1101)		
MTTFd values according to EN ISO 13849	150 years, for further details see technical table P007		
Compliance	CE to Low Voltage Directive 2014/35/EU RoHS Directive 2011/65/EU as last update by 2015/863/EU REACH Regulation (EC) n°1907/2006		
Ambient temperature	Standard execution = -30°C ÷ +70°C /PE option = -20°C ÷ +70°C /BT option = -40°C ÷ +70°C		
Seals, recommended fluid temperature	NBR seals (standard) = -20°C ÷ +80°C, with HFC hydraulic fluids = -20°C ÷ +50°C FKM seals (/PE option) = -20°C ÷ +80°C HNBR seals (/BT option) = -40°C ÷ +60°C, with HFC hydraulic fluids = -40°C ÷ +50°C		
Recommended viscosity	15÷100 mm^2/s - max allowed range 2.8 ÷ 500 mm^2/s		
Max fluid contamination level	ISO4406 class 20/18/15 NAS1638 class 9, see also filter section at www.atos.com or KTF catalog		
Hydraulic fluid	**Suitable seals type**	**Classification**	**Ref. Standard**
Mineral oils	NBR, FKM, HNBR	HL, HLP, HLPD, HVLP, HVLPD	DIN 51524
Flame resistant without water	FKM	HFDU, HFDR	ISO 12922
Flame resistant with water	NBR, HNBR	HFC	
Flow direction	As shown in the symbols of table 2		
Operating pressure	DLEH, LEH: Ports P, A, B **350 bar**; DLEHM, LEHM: Ports P, A **315 bar**; Port T **210** bar;		
Rated flow	See diagrams Q/Δp at section 7		
Max flow	DLEH, LEH: **12 l/min**, DLEHM, LEHM: **30 l/min**, see operating limits at section 8		
Internal leakage	Less than 5 drops/min (≤ 0,36 cm^3/min) at max working pressure		

3.1 Coils characteristics

Insulation class	**H** (180°C) for DC coils Due to the occuring surface temperatures of the solenoid coils, the European standards EN ISO 13732-1 and EN ISO 4413 must be taken into account
Protection degree to DIN EN 60529	**IP 65** (with connectors 666, 667, 669 correctly assembled)
Relative duty factor	100%
Supply voltage and frequency	See electric feature 5
Supply voltage tolerance	± 10%
Certification	**cURus** North American Standard

4 NOTES

Options

WP = prolonged manual override protected by rubber cap

⚠ The manual override operation can be possible only if the pressure at T port is lower than 50 bar

R = (only for DLEH) with check valve on P port, see section 2.

S = (only for DLEH and CART LEH) poppet with positive overlapping in the intermediate position to reduce the internal leakage at the valve switching and without manual override pin for safety applications (blind locking ring)

5 ELECTRIC CONNECTORS ACCORDING TO DIN 43650 (to be ordered separately, see tech table K500)

666 = standard connector IP-65, suitable for direct connection to electric supply source
667 = as 666, but with built-in signal led. Available for power supply voltage 24 AC or DC, 110 AC or DC, 220 AC or DC
669 = with built-in rectifier bridge for supplying DC coils by alternate current (AC 110V and 230V - Imax 1A)

6 ELECTRIC FEATURES

External supply nominal voltage ± 10%	**Voltage code**	Type of connector	Power consumption	Code of spare coil
12 DC	**12 DC**	666 or 667	30 W	COE-12DC
14 DC	**14 DC**			COE-14DC
24 DC	**24 DC**			COE-24DC
28 DC	**28 DC**			COE-28DC
48 DC	**48 DC**			COE-48DC
110 DC	**110 DC**			COE-110DC
125 DC	**125 DC**			COE-125DC
220 DC	**220 DC**			COE-220DC
110/50 AC - 120/60 AC	**110 RC**	669		COE-110RC
230/50 AC - 230/60 AC	**230 RC**			COE-230RC

7 Δp/Q DIAGRAM based on mineral oil ISO VG 46 at 50°C

Flow direction / Valve type	P → A (1) (P → B)	A → T (B → T)
DLEH-2A	B	–
DLEH-2C	C	–
DLEH-3A	D	C
DLEH-3C	C	A
DLEHM-3A	F	E
DLEHM-3C	F	E

(1) For two-way valves, pressure drop refers to PØT

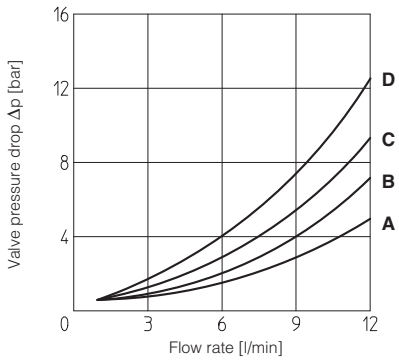

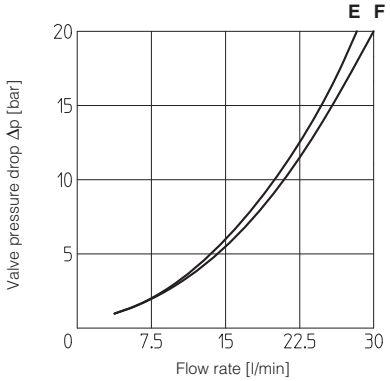

8 OPERATING LIMITS based on mineral oil ISO VG 46 at 50°C

The diagram has been obtained with warm solenoids and power supply at lowest value (Vnom - 10%).

A = DLEH-3A, DLEH-2C

B = DLEH-2A, DLEH-3C

C = DLEHM-3A

D = DLEHM-3C

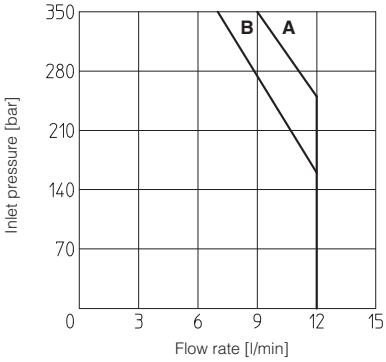

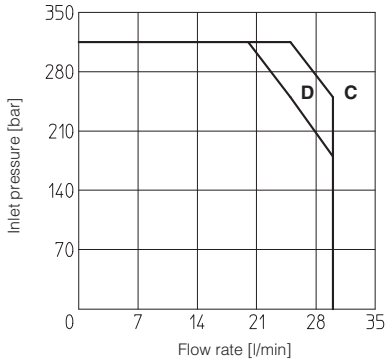

9 SWITCHING TIMES (average values in msec)

Valve type	Connector	Switch-on AC	Switch-on DC	Switch-off
DLEH(M)-* DC	666, 667	–	45	25
DLEH(M)-* RC	669	30	–	75

TEST CONDITIONS:

- 8 l/min; 150 bar
- nominal voltage
- 2 bar of counter pressure on port T
- based on mineral oil ISO VG 46 at 50°C

The response time is affected by elasticity of the hydraulic circuit, by variation of hydraulic characteristics and temperature

10 DIMENSIONS OF CARTRIDGE VERSIONS [mm] - for cavity dimensions see table P006

CART LEH-2A
CART LEH-2C

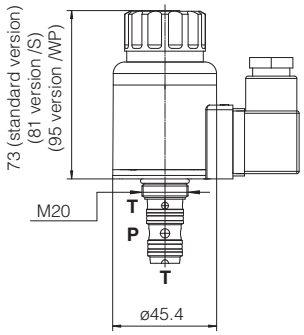

CART LEH-3A
CART LEH-3C

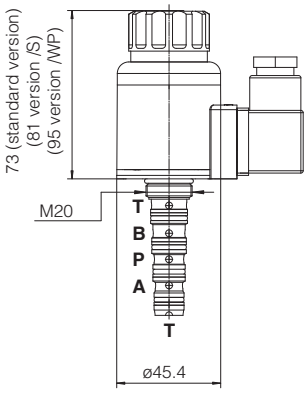

CART LEHM-3A
CART LEHM-3C

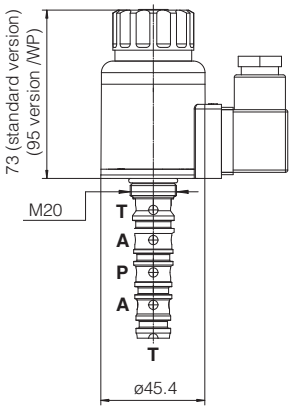

11 DIMENSIONS [mm]

DLEH-2*
DLEH-2*/R

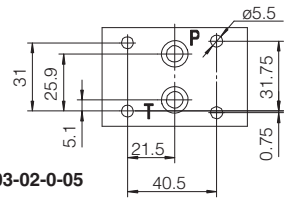

ISO 4401: 2005
Mounting surface: 4401-03-02-0-05
without A and B ports

Fastening bolts:
4 socket head screws M5x50 class 12.9
Tightening torque = 8 Nm
Seals: 2 OR 108
Ports P, T: Ø = 7,5 mm (max)

P = PRESSURE PORT
T = USE PORT
For the max pressures on ports, see section 3

DLEH-3*
DLEH-3*/R
DLEHM-3*
DLEHM-3*/R

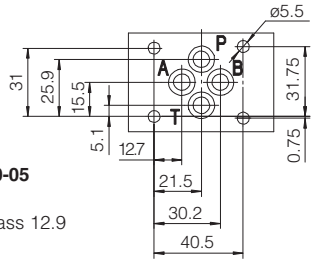

ISO 4401: 2005
Mounting surface: 4401-03-02-0-05

Fastening bolts:
4 socket head screws M5x50 class 12.9
Tightening torque = 8 Nm
Seals: 4 OR 108
Ports P, A, B, T: Ø = 7,5 mm (max)

P = PRESSURE PORT
A = USE PORT (not used for DLEH and LEH -3C versions)
B = USE PORT (not used for DLEH and LEH -3A versions)
(not used for DLEHM and LEHM)
T = TANK PORT
For the max pressures on ports, see section 3

DLEH-2A, DLEH-2A/R
DLEH-2C, DLEH-2C/R

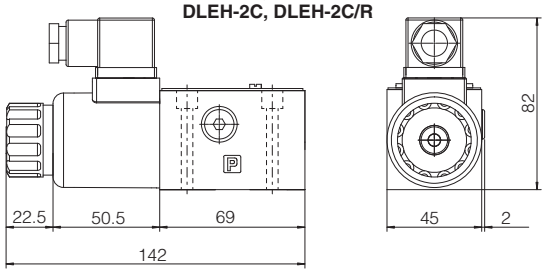

Mass: 1,5 Kg

DLEH-3A, DLEH-3A/R
DLEH-3C, DLEH-3C/R

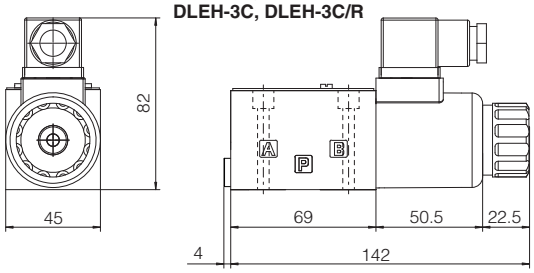

Mass: 1,5 Kg

DLEHM-3C

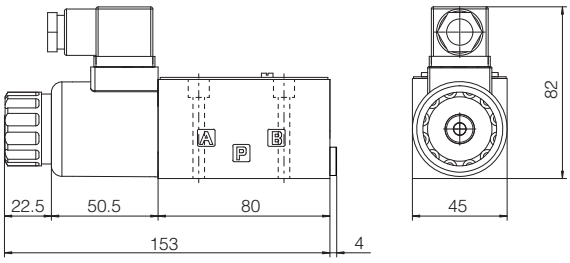

Mass: 1,7 Kg

DLEHM-3A

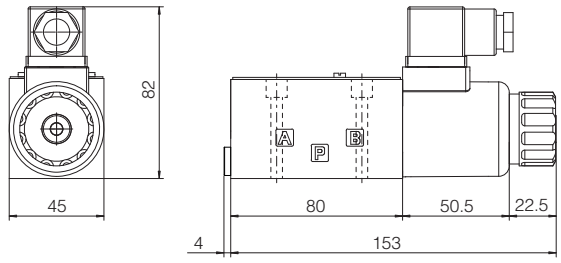

Mass: 1,7 Kg

Option /S

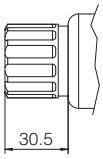

Option /WP

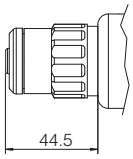

option /S = blind locking ring without manual override
option /WP = prolunged manual override, protected by rubber cap

Overall dimensions refer to valves with connectors type 666

12 MOUNTING SUBPLATES - see table K280

Valve	Subplate model	Ports location	GAS ports A-B-P-T	Ø Counterbore [mm] A-B-P-T	Mass [Kg]
DLEH-* DLEHM-*	BA-202	Ports A, B, P, T underneath;	3/8"	–	1,2
	BA-204	Ports P, T underneath; ports A, B on lateral side	3/8"	25,5	1,8
	BA-302	Ports A, B, P, T underneath;	1/2"	30	1,8

Solenoid cartridge valves

screw-in, 2-way, poppet type, leak free

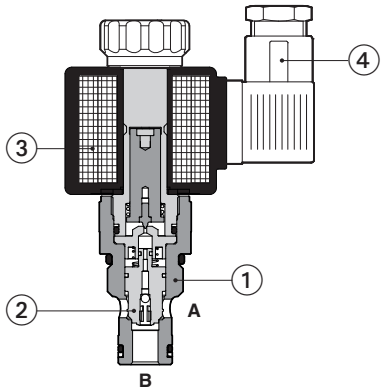

① cartridge body
② poppet
③ coil
④ coil connector (to be ordered separately)

JO-DL-4-2-X 24DC

JO-DL

Leak free, poppet type solenoid cartridges in screw-in execution normally used to cut off the hydraulic power supply line. They are available in normally closed NC, or normally open NO configurations.

Max flow: **300 l/min**
Max pressure: **350 bar**

1 MODEL CODE

JO	-	D	L	-	4	-	2	/	NC	-	X	24 DC	**	/	*

Cartridge valve screw-in type UNF

D = Directional control

L = Poppet type

Size:
4 = 3/4”-16UNF-2A
6 = 7/8”-14UNF-2A
10 = 1 5/16”-12UNF-2A

2 = Two-way

Version:
NC = normally closed in rest position
NO = normally open in rest position

X = Without connector, see section 5 for available connector

Voltage code:
12DC = 12 VDC
24DC = 24 VDC

Series number

Seals material, see section 4:
- = NBR
PE = FKM
BT = HNBR

2 HYDRAULIC SYMBOL

Hydraulic symbols

/NO

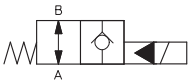

/NC

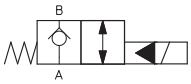

3 GENERAL CHARACTERISTICS

Installation position	Any position
Cavity	JO-DL-4 = SAE-08-2N; JO-DL-6 = SAE-10-2N; JO-DL-10 = SAE-16-2N
MTTFd values according to EN ISO 13849	150 years, for further details see technical table P007
Ambient temperature	**Standard** execution = -20°C ÷ +50°C **/PE option** = -20°C ÷ +50°C **/BT option** = -40°C ÷ +50°C
Compliance	CE to Low Voltage Directive 2014/35/EU RoHS Directive 2011/65/EU as last update by 2015/863/EU REACH Regulation (EC) n°1907/2006

4 HYDRAULIC CHARACTERISTICS

Model			**JO-DL-4-2/NC**	**JO-DL-4-2/NO**	**JO-DL-6-2/NC**	**JO-DL-6-2/NO**	**JO-DL-10-2/NC**	**JO-DL-10-2/NO**
Operating pressure		[bar]	Ports A and B **350**					
Max flow		[l/min]	40		75		300	
Response time:	energizing	[ms]	35	50	30	50	35	150
	de-energizing	[ms]	50	35	60	35	70	35
Internal leakage			less than 5 drops/min (≤ 0,36 cm^3/min) max at 350 bar					

5 ELECTRIC CHARACTERISTICS

Relative duty factor	100%	
Supply voltage	See model code at section 1	
Supply voltage tolerance	±10%	
Max power	20 Watt	
Power connector	666 (plastic - black); 3 pins, cable clamp PG11, cable max ø 11 mm	**to be ordered separately**
Connectors features	DIN 43650 - ISO 4400; IP65 (DIN 40050); VDE 0110C	

6 INSTALLATION NOTES

1) The assembling of cartridges inside manifolds must be done tightening the valve exagonal ring (for tightening torque, see section 10).
   Excessive values can cause anomalous deformation and poppet sticking.
2) The CE certification is valid only with shielded electric cables and connector. Consult also tab. P004.

7 SEALS AND HYDRAULIC FLUID - for other fluids not included in below table, consult Atos Technical Office

Seals, recommended fluid temperature	NBR seals (standard) = -20°C ÷ +80°C, with HFC hydraulic fluids = -20°C ÷ +50°C FKM seals (/PE option) = -20°C ÷ +80°C HNBR seals (/BT option)= -40°C ÷ +60°C, with HFC hydraulic fluids = -40°C ÷ +50°C		
Recommended viscosity	15÷100 mm^2/s - max allowed range 2,8 ÷ 500 mm^2/s		
Max fluid contamination level	ISO4406 class 20/18/15 NAS1638 class 9, see also filter section at www.atos.com or KTF catalog		
Hydraulic fluid	**Suitable seals type**	**Classification**	**Ref. Standard**
Mineral oils	NBR, FKM	HL, HLP, HLPD, HVLP, HVLPD	DIN 51524
Flame resistant without water	FKM	HFDU, HFDR	ISO 12922
Flame resistant with water	NBR	HFC	

8 **DIAGRAMS** based on mineral oil ISO VG 46 at 50°C

9.1 JO-DL-4

Valve pressure drop - NO version
1 = A → B de-energized
2 = B → A de-energized
3 = B → A energized

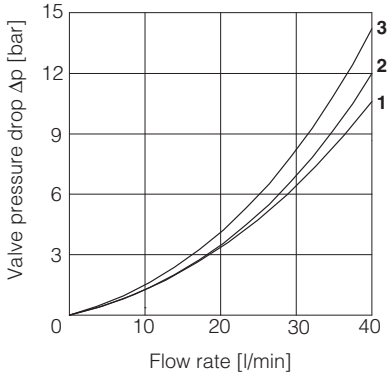

Valve pressure drop - NC version
4 = A → B energized
5 = B → A de-energized
6 = B → A energized

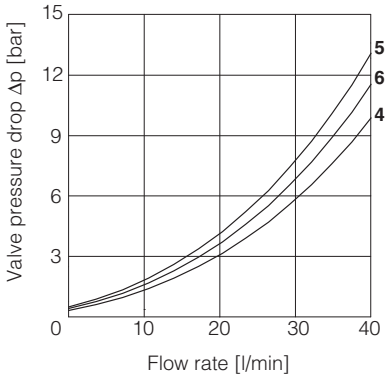

9.2 JO-DL-6

Valve pressure drop - NO version
1 = A → B de-energized
2 = B → A de-energized
3 = B → A energized

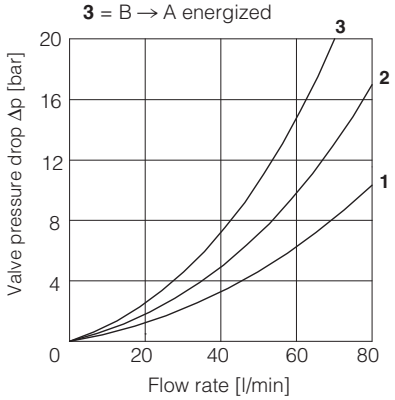

Valve pressure drop - NC version
4 = A → B energized
5 = B → A de-energized
6 = B → A energized

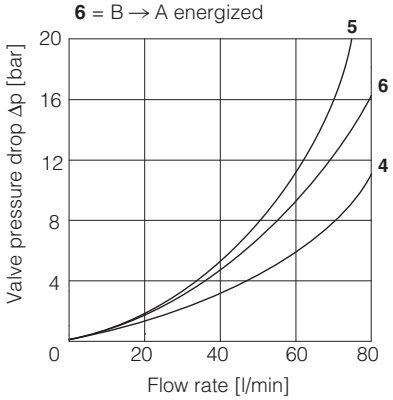

9.3 JO-DL-10

Valve pressure drop - NO version
1 = A → B de-energized
2 = B → A de-energized
3 = B → A energized

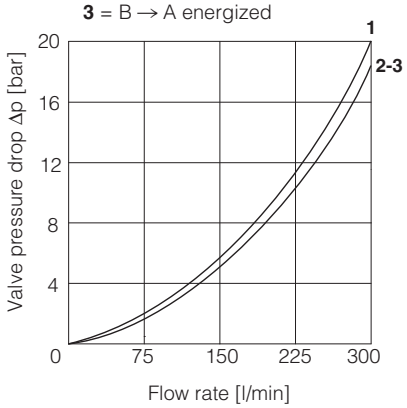

Valve pressure drop - NC version
4 = A → B energized
5 = B → A de-energized
6 = B → A energized

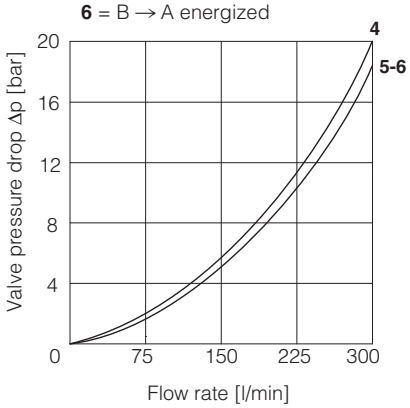

9 INSTALLATION DIMENSIONS [mm]

Version /NO and /NC

JO-DL-4-2/N*
Mass 0.35 Kg

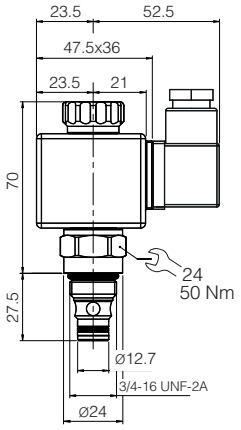

JO-DL-6-2/N*
Mass 0.35 Kg

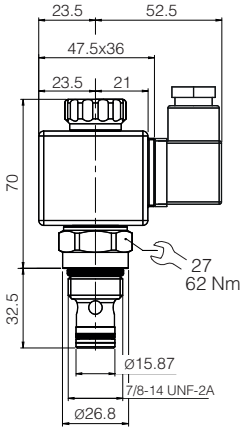

JO-DL-10-2/N*
Mass 0.4 Kg

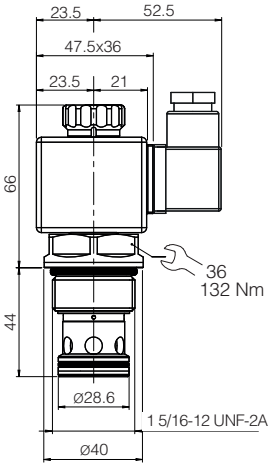

10 CAVITY DIMENSIONS

Note: cavity compatible with old cartridge series

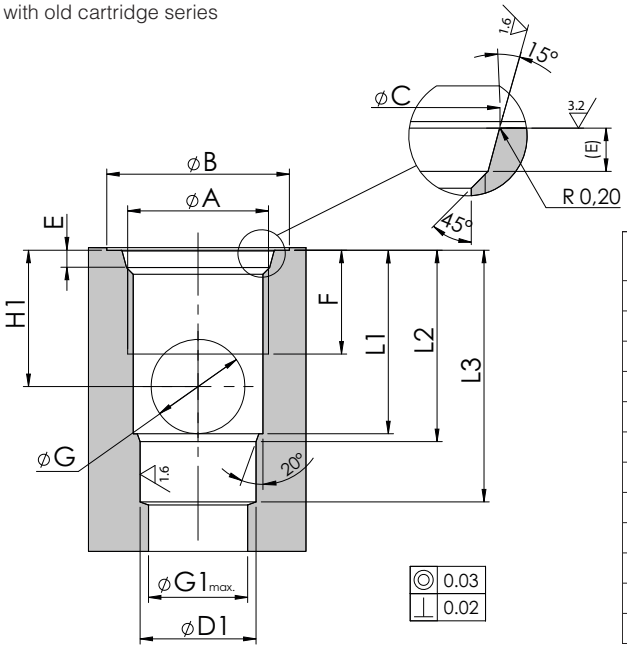

	JO-DL-4-2	JO-DL-6-2	JO-DL-10-2
A	3/4-16 UNF	7/8-14 UNF	1 5/16-12 UNF
B	26	30	42
C	$20.6^{+0.1}_{0}$	$23.9^{+0.1}_{0}$	$35.5^{+0.1}_{0}$
D1	$12.7^{+0.05}_{0}$	$15.87^{+0.05}_{0}$	$28.60^{+0.05}_{0}$
E	$2.6^{+0.3}_{0}$	$2.6^{+0.3}_{0}$	$3.3^{+0.3}_{0}$
F	13	15	20
G	9	12	19
G1	12	15	24
H1	14	18	25
L1	19.1	24.2	33.5
L2	20.5	25.5	36
L3	29	34.5	49

Hand & mechanical directional valves

ISO 4401 sizes 06, 10, 16 and 25

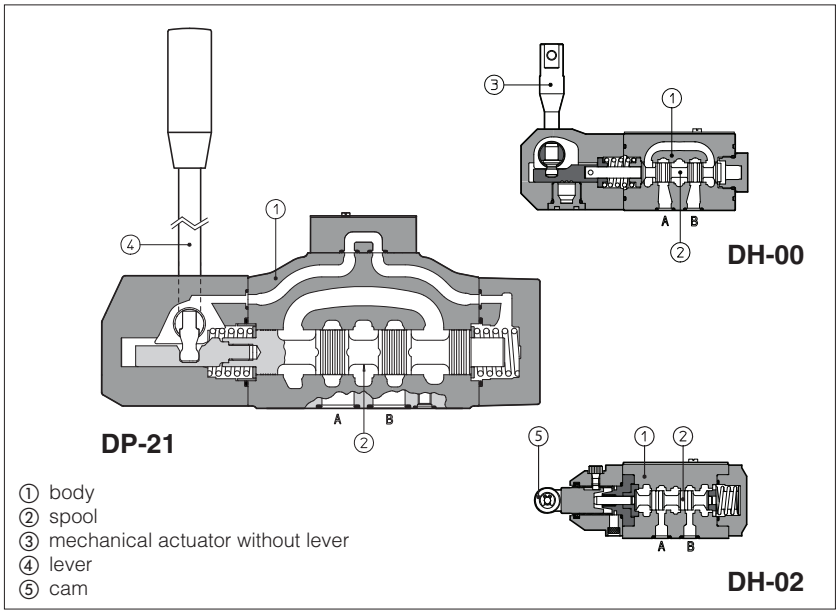

① body
② spool
③ mechanical actuator without lever
④ lever
⑤ cam

Hand & mechanical operated directional valves are spool type, three or four way, two or three position valves, available with following actuator types:
- mechanical actuator: general purpose execution for connection to customer device for the valve's remote operation
- hand-lever
- cam (only for DH and DK).

Valve sizes and max flow:

DH-00, 01 = size 06, flow up to 80 l/min
DH-02 = size 06, flow up to 50 l/min
DK-10 (11) = size 10, flow up to 150 l/min
DK-12 = size 10, flow up to 140 l/min
DP-2 = size 16, flow up to 300 l/min
DP-4 = size 25, flow up to 700 l/min

Max pressure:
350 bar for DH-0*, DP-2, DP-4
315 bar for DK-1*

1 MODEL CODE

DH-0	1	1	3	/	C	/	A	**	/	*

Directional control valve, size:
DH-0 = 06
DK-1 = 10
DP-2 = 16
DP-4 = 25

Type of actuator:
0 = mechanical, without lever
1 = hand-lever
2 = cam (only for DH-0 and DK-1)

Valve configuration, see sections 2 and 3
0 = 3 positions, without springs
1 = 3 positions, spring centered
2 = 2 positions, spring return
3 = 2 positions, spring return
4 = 3 positions, with detent
5 = 2 positions, with detent
6 = 2 positions, with detent
7 = 2 positions, spring return
8 = 2 positions, spring return

Spool type, see section 3

Only for DH-01 hand-lever valves:
C = short hand - lever

Options:
A = actuator device mounted on side of port B
I or **E** to be specified for DH-00, DH-01 and DK-00, DK-01 with configuration **6, 7, 8,** see section 3 for hydraulic connections

Only for DK-1:
Y = external drain

Series number

Seals material:
- = NBR
PE = FKM
BT = HNBR **(1)**

(1) BT option available only for DH-00, DH-01, DK-10 and DK-11

2 RANGE OF VALVE'S MODELS

VALVE TYPE	SIZE	VALVE CONFIGURATION								
		0	1	2	3	4	5	6	7	8
DH-00	06	●	●	●	●	●	●	●	●	●
DH-01		●	●	●	●	●	●	●	●	●
DH-02					●				●	●
DK-10	10	●	●	●	●	●	●	●	●	●
DK-11		●	●	●	●	●	●	●	●	●
DK-12					●				●	●
DP-20	16		●		●	●	●			
DP-21			●		●	●	●			
DP-40	25		●		●	●	●			
DP-41			●		●	●	●			

3 **CONFIGURATIONS and SPOOLS** - for intermediate passages, see tab. E001

DH-00*, DH-01* and DK-10*, DK-11* - mechanical and hand lever actuator

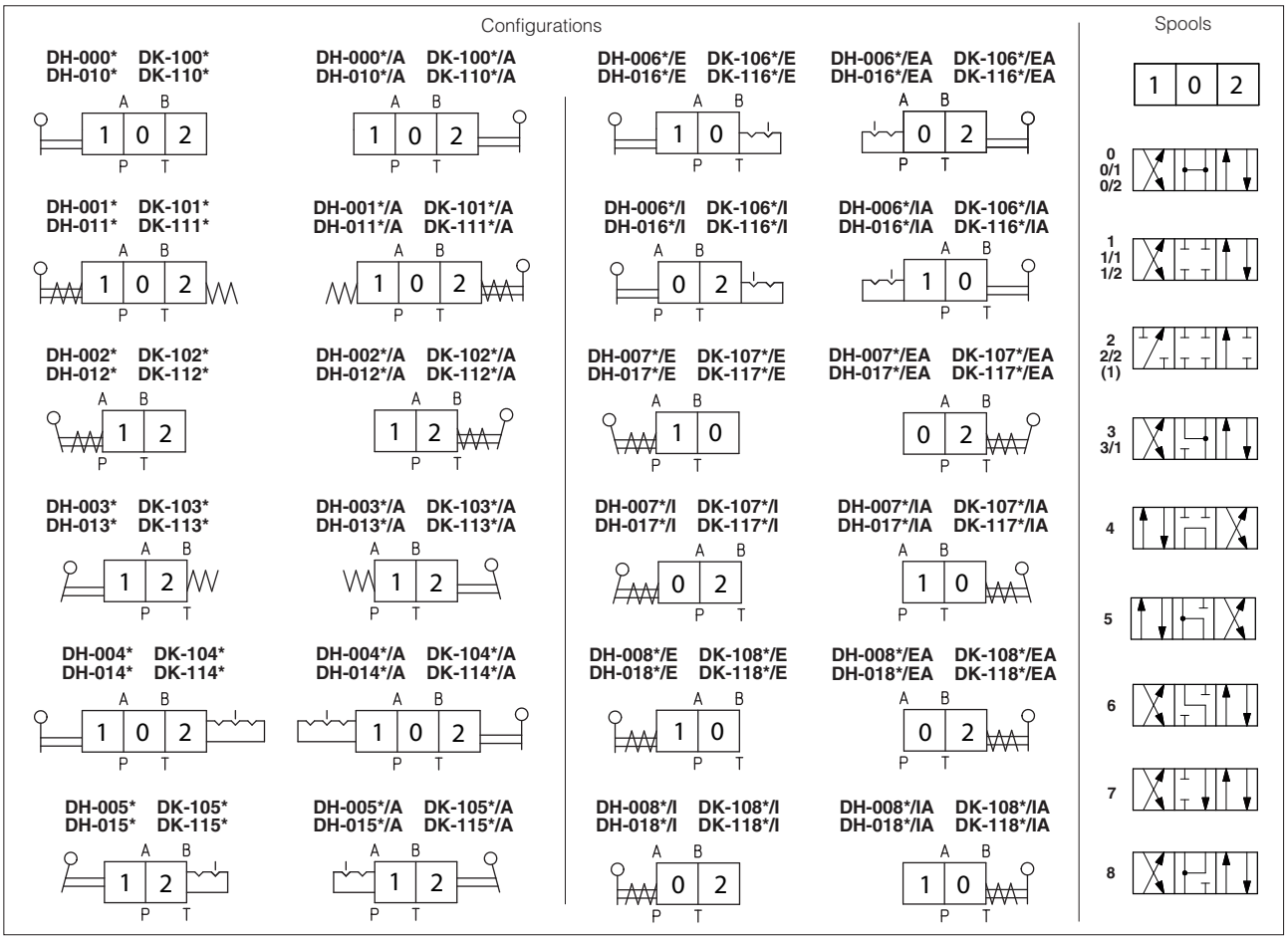

NOTE: configurations 2 and 3 are available only with spools type 0/2, 1/2, 2/2
(1) spools type 2 and 2/2 available only for DH

DP-20*, DP-21*, DP-40*, DP-41* - hand lever actuator

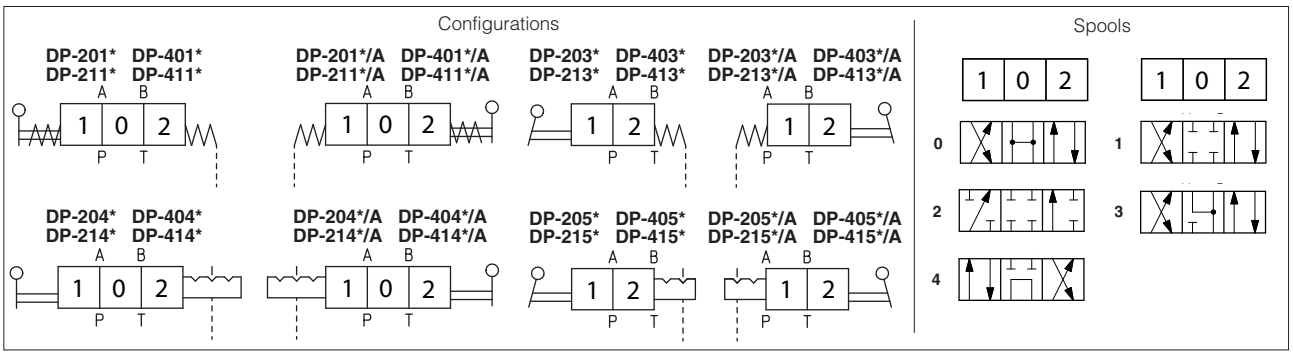

DH-02*, DK-12* - cam actuator

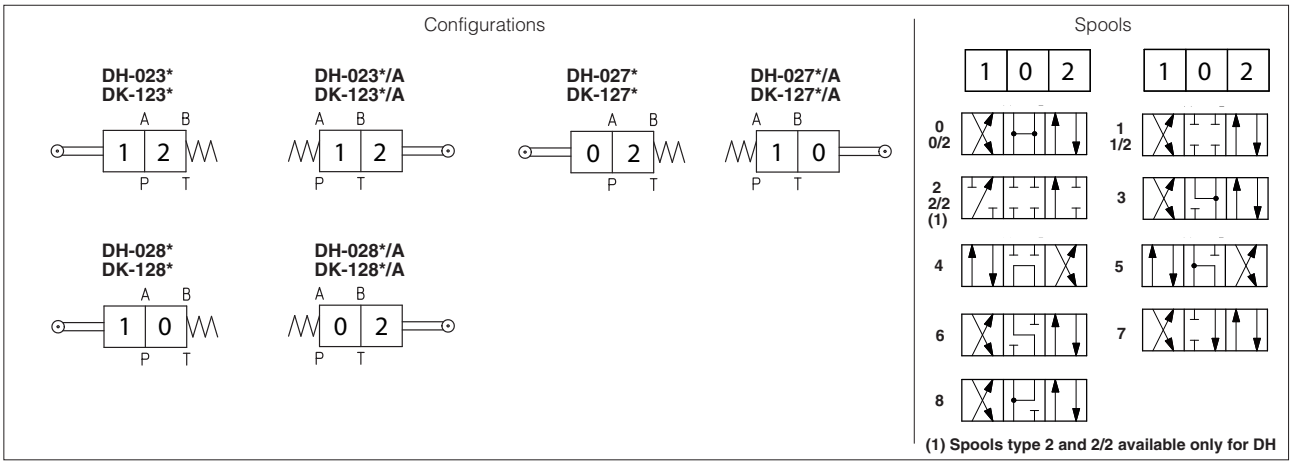

NOTE: spools type 0/2, 1/2, 2/2 are only used for valves type DH-023*/2 and DK 123*/2;

4 GENERAL CHARACTERISTICS

Assembly position		Any position except for configuration 0 (without spring) that must be installed with horizontal axis
Subplate surface finishing to ISO 4401		Acceptable roughness index, Ra ≤0,8 recommended Ra 0,4 - flatness ratio 0,01/100
MTTFd valves according to EN ISO 13849		150 years, see technical table P007
Ambient temperature range		**Standard** = -30°C ÷ +70°C **/PE** option = -20°C ÷ +70°C **/BT** option = -40°C ÷ +70°C
Storage temperature range		**Standard** = -30°C ÷ +80°C **/PE** option = -20°C ÷ +80°C **/BT** option = -40°C ÷ +80°C
Flow direction		As shown in the symbols of tables 3
Surface protection		Zinc coating with black passivation
Corrosion resistance		Salt spray test (EN ISO 9227) > 200h
Compliance		RoHS Directive 2011/65/EU as last update by 2015/863/EU REACH Regulation (EC) n°1907/2006
Operating pressure	**DH**	P, A, B = **350 bar** T = **250 bar (160 bar for DH-02)**
	DK	P, A, B = **315 bar** T = **250 bar**
	DP	P, A, B, X = **350 bar** T = **250 bar** for external drain (standard); Ports Y = 0 bar
Maximum flow	**DH-00, DH-01** **DH-02**	80 l/min 50 l/min
	DK-10, DK-11 **DK-12**	150 l/min 140 l/min
	DP-2 **DP-4**	300 l/min 700 l/min
Activation force without pressure on port T (nominal values ± 10%)	**DH**	**DH-00***: 70 N; **DH-004***: 40 N; **DH-01***: 36 N; **DH-014***: 21 N; **DH-01*/C**: 43 N; **DH-014*/C**: 25 N; **DH-02***: 81 N;
	DK	**DK-10***: 86 N; **DK-104**: 41 N; **DK-11***: 44 N; **DK-114***: 21 N; **DK-12***: 120 N
	DP	**DP-201***: 168 N; **DP-203***: 73 N; **DP-211***: 38 N; **DP-213***: 16 N; **DP-401***: 365 N; **DP-403***: 132 N; **DP-411***: 76 N; **DP-413***: 28 N;

5 SEALS AND HYDRAULIC FLUIDS - For other fluids not included in above table, consult our technical office

Seals, recommended fluid temperature	NBR seals = (standard) -30°C ÷ +80°C, with HFC hydraulic fluids = -20°C ÷ +50°C FKM seals = (/PE option) -20°C ÷ +80°C		
Recommended viscosity	15÷100 mm^2/s - max allowed range 2,8 ÷ 500 mm^2/s		
Max fluid contamination level	ISO4406 class 20/18/15 NAS1638 class 9, see also filter section at www.atos.com or KTF catalog		
Hydraulic fluid	**Suitable seals type**	**Classification**	**Ref. Standard**
Mineral oils	NBR, FKM	HL, HLP, HLPD, HVLP, HVLPD	DIN 51524
Flame resistant without water	FKM	HFDU, HFDR	ISO 12922
Flame resistant with water	NBR	HFC	

6 Q/ΔP DIAGRAMS based on mineral oil ISO VG 46 at 50°C

DH-02

Flow direction / Spool type	P→A	P→B	A→T	B→T	P→T
0, 0/2	C	C	C	C	
1, 1/2	A	A	A	A	
2, 2/2, 3	A	A	C	C	
4, 5	D	D	D	D	A
6, 7	A	A	C	A	
8	C	C	B	B	

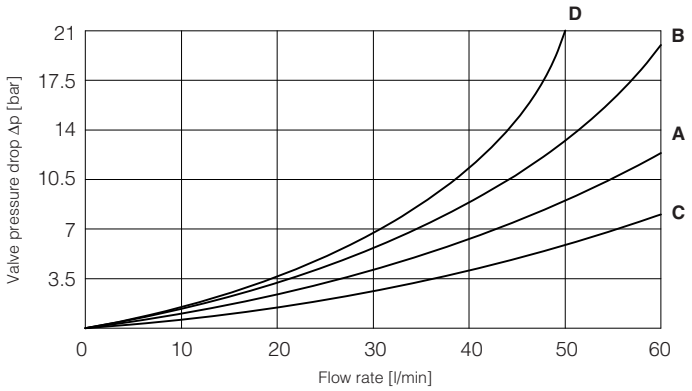

DH-00, DH-01

Flow direction / Spool type	P→A	P→B	A→T	B→T	P→T
0, 0/1	A	A	B	B	C
1, 1/1	B	B	C	C	
3, 3/1	C	C	B	B	
4, 5	E	E	F	F	D
1/2, 0/2, 6, 7	C	C	D	D	
8	A	A	D	D	
2	D	D			
2/2	E	E			

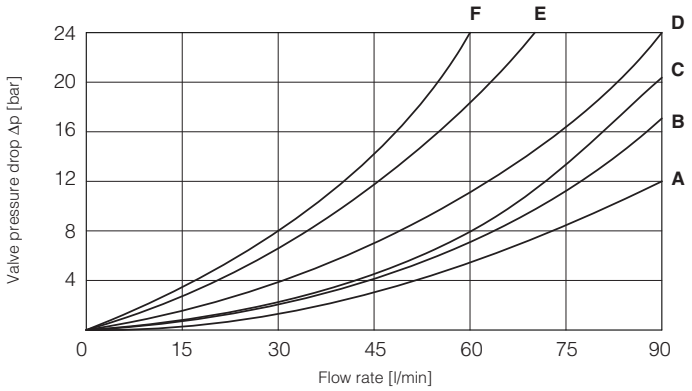

DK-*

Flow direction / Spool type	P→A	P→B	A→T	B→T	P→T
0, 0/1, 0/2	A	A	B	B	
1, 1/1, 6, 8	A	A	D	C	
3, 3/1, 7	A	A	C	D	
4	B	B	B	B	E
5	A	B	C	C	F
1/2	B	C	C	B	

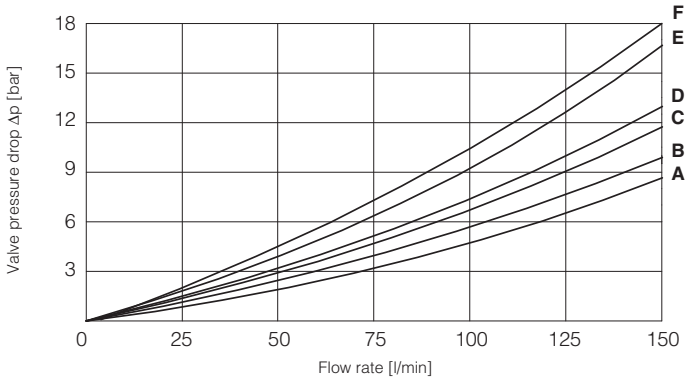

DP-2*

Flow direction / Spool type	P→A	P→B	A→T	B→T	P→T
1, 3	A	A	B	C	
0	A	A	C	D	B
2	A	A			
4	B	B	F	G	E

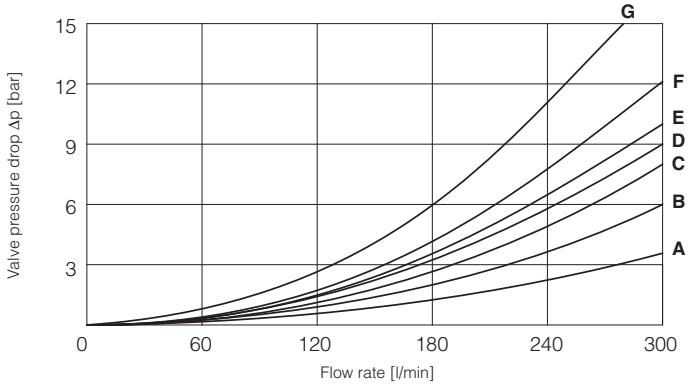

DP-4*

Flow direction / Spool type	P→A	P→B	A→T	B→T	P→T
1	A	A	A	C	
0	C	B	C	D	E
2	A	A			
3	A	A	C	E	
4	B	B	F	G	G

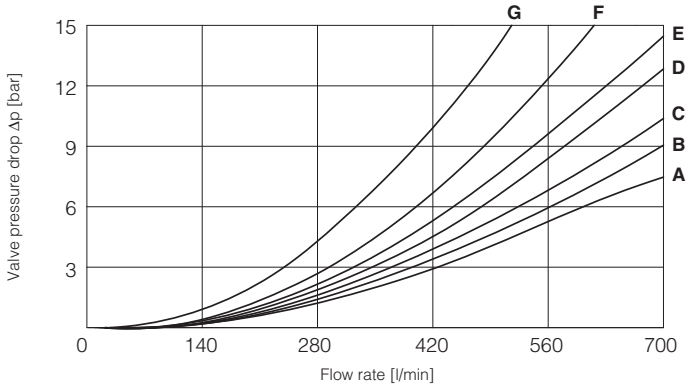

7 DIMENSIONS OF HAND & MECHANICAL OPERATED VALVES ISO 4401 SIZE 06 [mm]

DH-00**

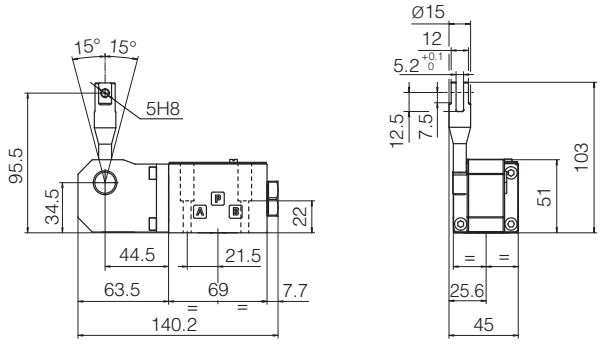

Mass: 1,2 Kg

DH-01**

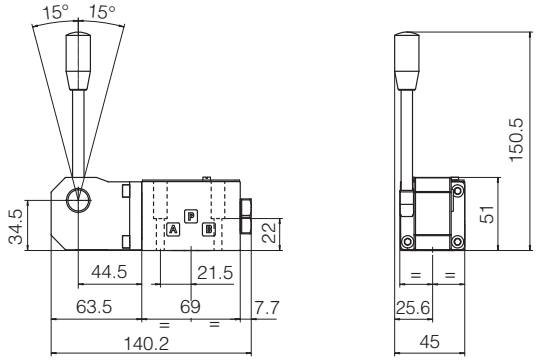

Mass: 1,6 Kg

DH-01/C**

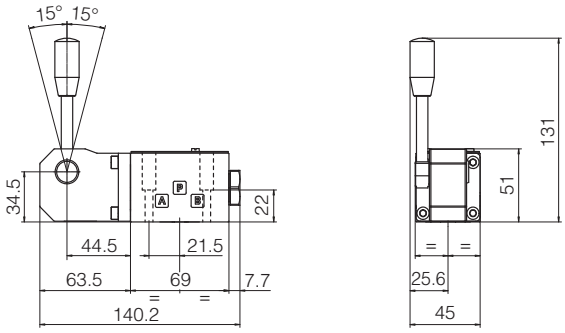

DH-02**

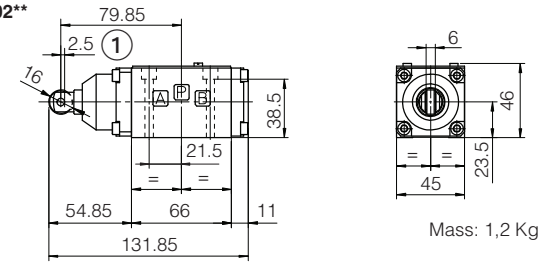

Mass: 1,2 Kg

(1) Working stroke: 2,5 mm; extra-stroke: 0,5 mm max.

ISO 4401: 2005
Mounting surface: 4401-03-02-0-05 (see table P005)
Fastening bolts:
DH-02**: 4 socket head screws M5x50 class 12.9
Other version 4 socket head screws M5x30 class 12.9
Tightening torque = 8 Nm
Diameter of ports A, B, P, T: Ø = 7,5 mm (max)
Seals: 4 OR 108

8 DIMENSIONS OF HAND & MECHANICAL OPERATED VALVES ISO 4401 SIZE 10 [mm]

DK-10**

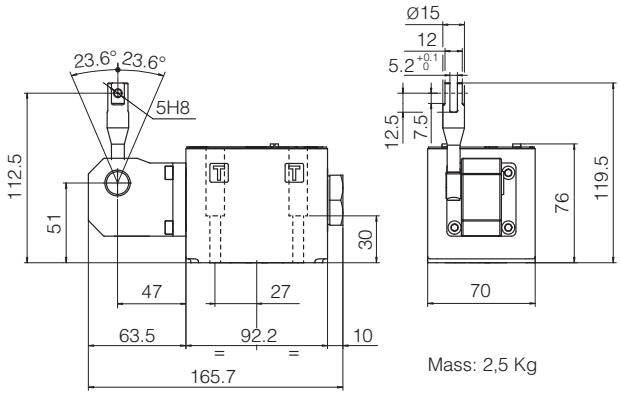

Mass: 2,5 Kg

DK-11**

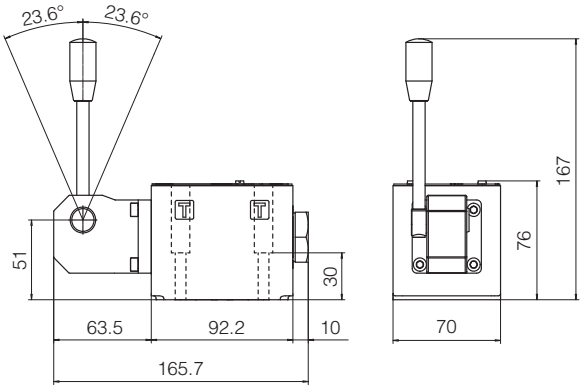

Mass: 2,8 Kg

DK-12**

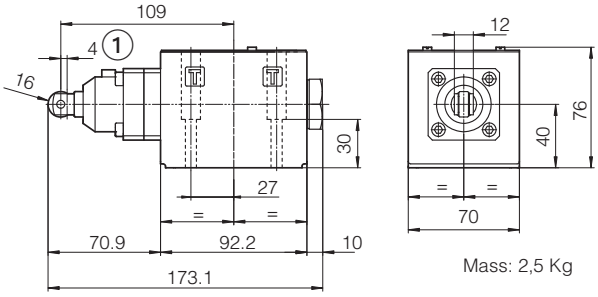

Mass: 2,5 Kg

ISO 4401: 2005
Mounting surface: 4401-05-05-0-05 (see table P005)
(Without X port, Y port optional)
Fastening bolts: 4 socket head screws M6x40 class 12.9
Tightening torque = 15 Nm
Diameter of ports A, B, P, T: Ø = 11,2 mm (max)
Seals: 5 OR 2050

(1) Working stroke: 4 mm; extra-stroke: 0,5 mm max.

9 DIMENSIONS OF HAND & MECHANICAL OPERATED VALVES ISO 4401 SIZE 16 [mm]

DP-21

ISO 4401: 2005
Mounting surface: 4401-07-07-0-05 (see table P005)
Fastening bolts:
4 socket head screws M10x50 class 12.9, Tightening torque = 70 Nm
2 socket head screws M6x40 class 12.9, Tightening torque = 15 Nm
Diameter of ports A, B, P, T : Ø = 20 mm
Diameter of ports X,Y: Ø = 7 mm
Seals: 4 OR 130, 3 OR 109/70

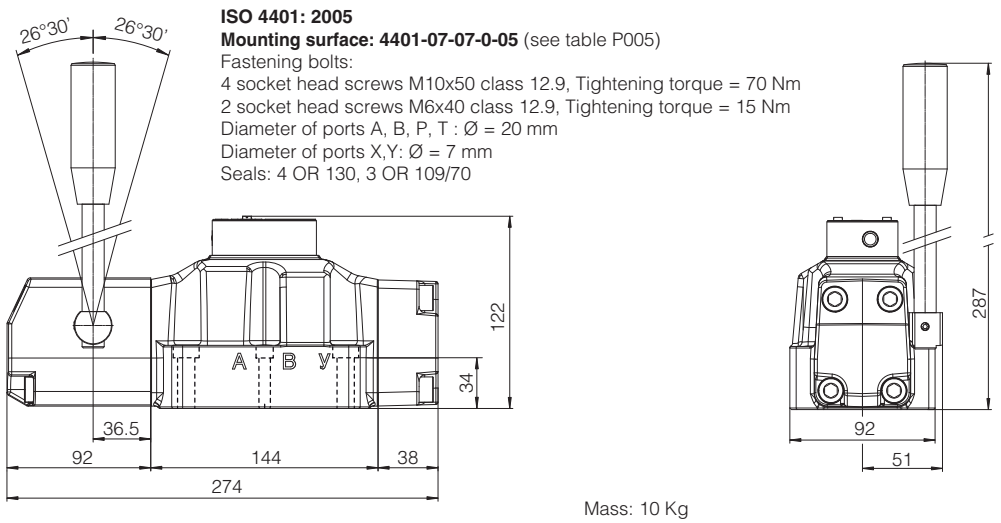

Mass: 10 Kg

DP-20

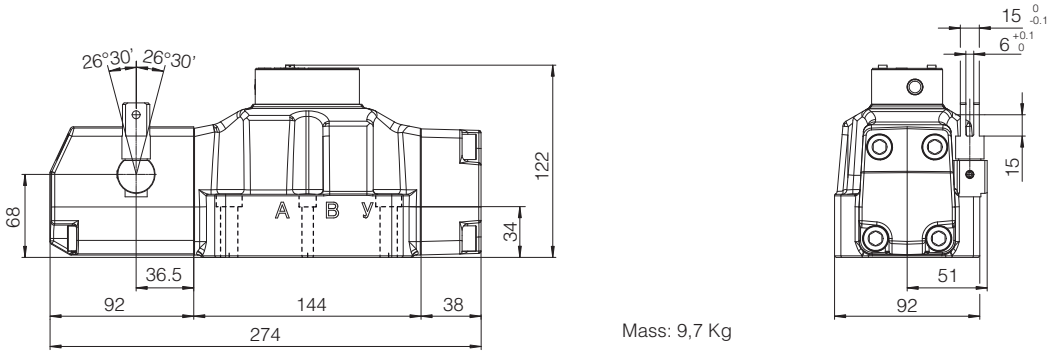

Mass: 9,7 Kg

10 DIMENSIONS OF HAND & MECHANICAL OPERATED VALVES ISO 4401 SIZE 25 [mm]

DP-41

ISO 4401: 2005
Mounting surface: 4401-08-08-0-05 (see table P005)
Fastening bolts:
6 socket head screws M12x60 class 12.9, Tightening torque = 125 Nm
Diameter of ports A, B, P, T : Ø = 24 mm
Diameter of ports X,Y: Ø = 7 mm
Seals: 4 OR 4112, 3 OR 3056

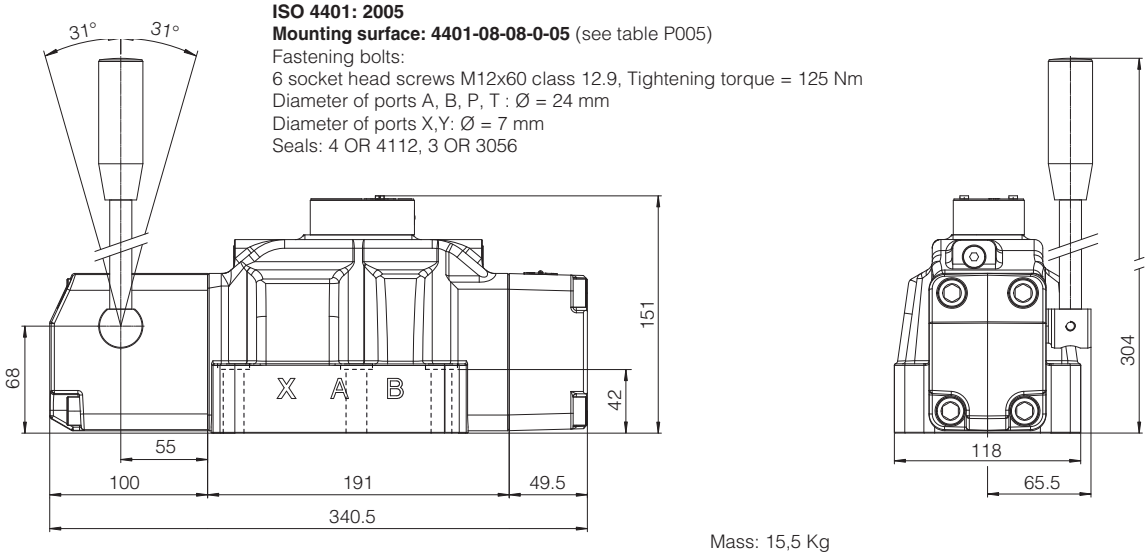

Mass: 15,5 Kg

DP-40

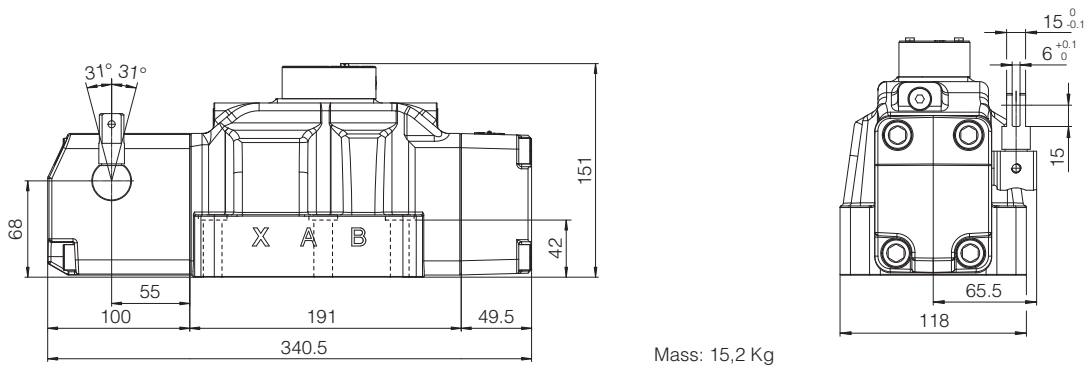

Mass: 15,2 Kg

Hydraulic operated directional valves

ISO 4401 size 06, 10, 16, 25 and 32

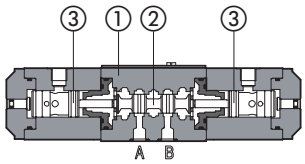

DH-0511 (series 75)

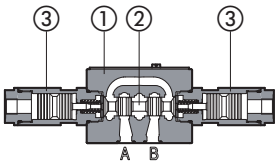

DH-0511 (series 80)

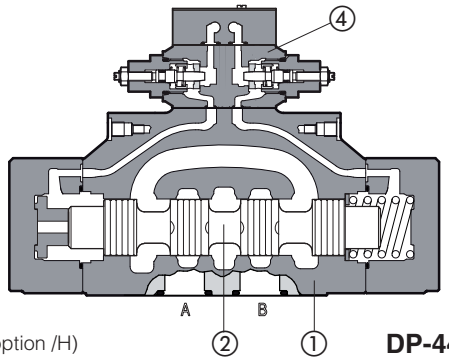

DP-4411/H

① Main body
② Spool
③ Hydraulic actuator
④ Adjustable chokes (option /H)

Hydraulic operated directional valves, spool type, three or four way, two or three positions.
Available with single or double hydraulic actuator.

Valve sizes and max flow:

DH-0 = size 06
series 80 flow up to 80 l/min
series 75 flow up to 50 l/min
DK-1 = size 10, flow up to 160 l/min
DP-1 = size 10, flow up to 160 l/min
DP-2 = size 16, flow up to 300 l/min
DP-4 = size 25, flow up to 700 l/min
DP-6 = size 32, flow up to 1000 l/min

Max pressure:
350 bar for DH-0, DP-1, DP-2, DP-4, DP-6
315 bar for DK-1

1 MODEL CODE

DH-0	4	1	3	/	A	**	/	*

DH-0

Directional control valve, size:
DH-0 = 06
DK-1 = 10
DP-1 = 10
DP-2 = 16
DP-4 = 25
DP-6 = 32

4

Type of actuator:
4 = single actuator
5 = double actuator

1

Valve configuration, see section 5
0 = free, without springs
1 = spring centered, without detent
3 = spring offset external position
5 = 2 external positions, with detent (only for DH and DK)
7 = center and external positions

3

Spool type, see section 5

A

Options:
only for DH-04 and DK-14, see section 5:
/A = actuator device mounted on side of port B
only for DP:
/H = adjustable chokes for controlling the main spool shifting time (meter-out to the pilot chambers of the main valve)
/H9= adjustable chokes for controlling the main spool shifting time (meter-in to the pilot chambers of the main valve)
/R = with check valve on port P (not available for DP-1*)
/S = main spool stroke adjustment (not available for DP-1*)

******

Series number
Only for DH-0 to be specified in the order code:
80 new series
75 old series **(1)**

*****

Seals material, see section 4:
- = NBR
PE = FKM
BT = HNBR

(1) DH series 75 is a phase-out component not recommended for new applications

2 HYDRAULIC CHARACTERISTICS

Valve model		DH-0 series 80	DH-0 series 75 (1)	DK-1	DP-1	DP-2	DP-4	DP-6
Max recommended flow	[l/min]	80	50	160	160	300	700	1000
Max pressure on port P, A, B	[bar]	350	350	315	350			
Max pressure on port T (also X, Y for DP)	[bar]	see note **(2)**			250			
Minimum pilot pressure	[bar]	5			4			
Max recommended pressure on piloting line	[bar]	210	70	70	250			

(1) DH series 75 is a phase-out component not recommended for new applications
(2) The max pressure on port T has to be not over 50% of pilot pressure

3 GENERAL CHARACTERISTICS

Assembly position	Any position except for valves type DH-050, DK-150, DP-*50 (without springs) that must be installed with their longitudinal axis horizontal
Subplate surface finishing to ISO 4401	Acceptable roughness index, Ra ≤0,8 recommended Ra 0,4 - flatness ratio 0,01/100
MTTFd valves according to EN ISO 13849	150 years, see technical table P007
Ambient temperature range	**Standard** = -30°C ÷ +70°C **/PE** option = -20°C ÷ +70°C **/BT** option = -40°C ÷ +70°C
Storage temperature range	**Standard** = -30°C ÷ +80°C **/PE** option = -20°C ÷ +80°C **/BT** option = -40°C ÷ +80°C
Surface protection	Body: zinc coating with black passivation
Corrosion resistance	Salt spray test (EN ISO 9227) > 200 h
Compliance	RoHS Directive 2011/65/EU as last update by 2015/863/EU REACH Regulation (EC) n°1907/2006

4 SEALS AND HYDRAULIC FLUID - for other fluids not included in below table, consult our technical office

Seals, recommended fluid temperature	NBR seals (standard) = -20°C ÷ +80°C, with HFC hydraulic fluids = -20°C ÷ +50°C FKM seals (/PE option) = -20°C ÷ +80°C NBR low temp (standard) = -20°C ÷ +80°C, with HFC hydraulic fluids = -20°C ÷ +50°C		
Recommended viscosity	15÷100 mm²/s - max allowed range 2,8 ÷ 500 mm²/s		
Max fluid contamination level	ISO4406 class 20/18/15 NAS1638 class 9, see also filter section at www.atos.com or KTF catalog		
Hydraulic fluid	**Suitable seals type**	**Classification**	**Ref. Standard**
Mineral oils	NBR, FKM, NBR low temp	HL, HLP, HLPD, HVLP, HVLPD	DIN 51524
Flame resistant without water	FKM	HFDU, HFDR	ISO 12922
Flame resistant with water	NBR, NBR low temp	HFC	

5 CONFIGURATIONS and SPOOLS valves type DH-*, DK-*

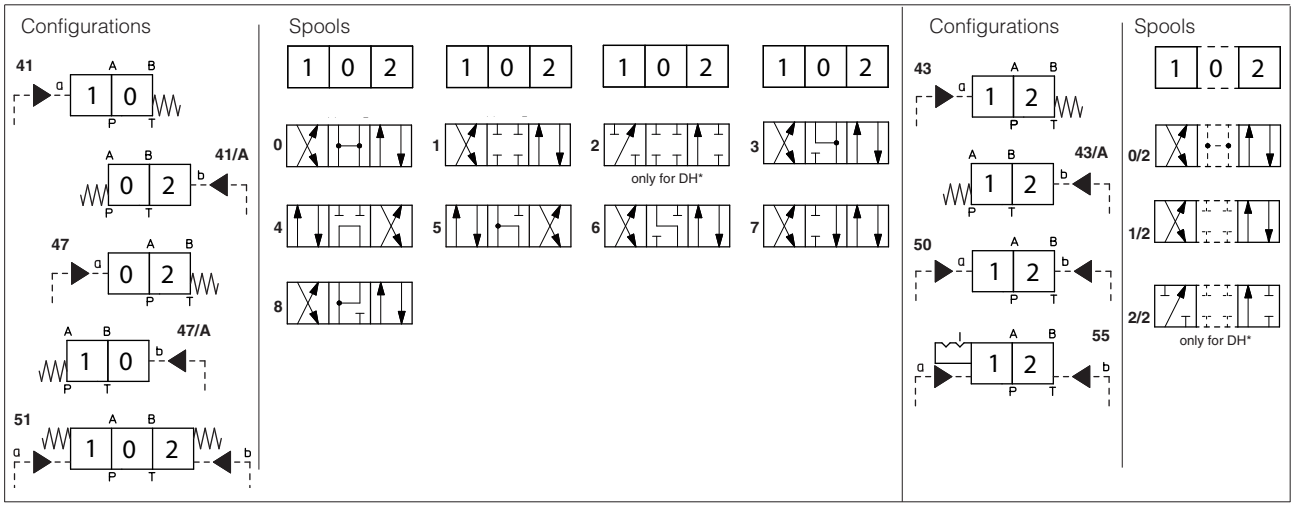

NOTES
- spools type **0** and **3** are also available as **0/1** and **3/1** with restricted oil passages in central position, from user ports to tank.
- spools type **1, 4** and **5** are also available as **1/1, 4/8** (only for DH), and **5/1.** They are properly shaped to reduce water-hammer shocks during the switching.
- spools type **1, 1/2, 3, 8** are available as **1P, 1/2P, 3P, 8P** (only for DH-0) to limit valve internal leakages.

6 CONFIGURATIONS and SPOOLS valves type DP-*

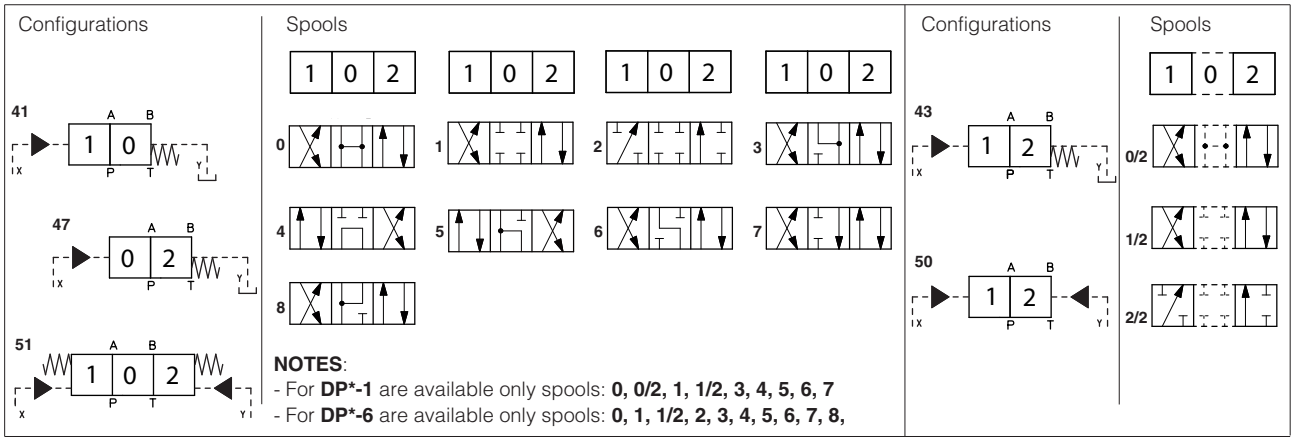

NOTES:
- For **DP*-1** are available only spools: **0, 0/2, 1, 1/2, 3, 4, 5, 6, 7**
- For **DP*-6** are available only spools: **0, 1, 1/2, 2, 3, 4, 5, 6, 7, 8,**

Special shaped spools
- spools type **0** and **3** are also available as **0/1** and **3/1** with restricted oil passages in central position, from user ports to tank.
- spools type **1, 4** and **5** are also available as **1/1, 4/8** and **5/1** are properly shaped to reduce water-hammer shocks during the switching.

7 Q/Δp DIAGRAMS

DH-0 series **80**	See table E015 relating the DHE valve from which DH-0* are derivated
DK-1	See table E025 relating the DKE valve from which DK-1* are derivated
DP-1	See table E085 relating the DPH*-1 valve from which DP-1* are derivated
DP-2	See table E085 relating the DPH*-2 valve from which DP-2* are derivated
DP-4	See table E085 relating the DPH*-4 valve from which DP-4* are derivated
DP-6	See table E085 relating the DPH*-6 valve from which DP-6* are derivated

8 INSTALLATION DIMENSIONS OF DH-0 [mm]

ISO 4401: 2005
Mounting surface: 4401-03-02-0-05 (see table P005)
Fastening bolts: 4 socket head screws M5x30 class 12.9
Tightening torque = 8 Nm
Diameter of ports A, B, P, T: Ø = 7,5 mm (max)
Seals: 4 OR 108

Mounting subplates: see tab. K280

DH-0* series 80

① Pilot pressure port G1/8”

DH-04**

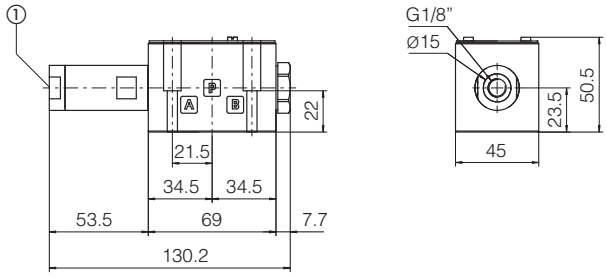

Mass: 1,2 Kg

DH-05**

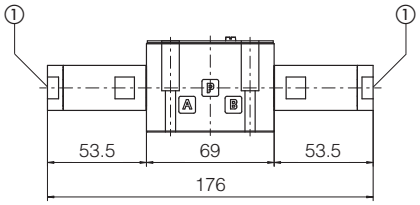

Mass: 1,5 Kg

DH-0* series 75 (phase out)

① Pilot pressure port G1/8”
② Manual override

DH-04**

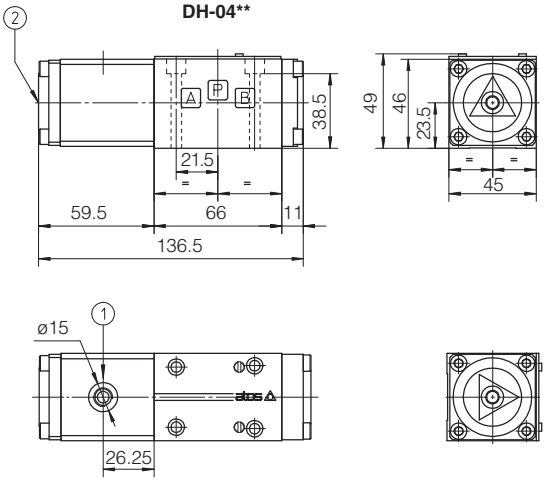

Mass: 1,2 Kg

DH-05**

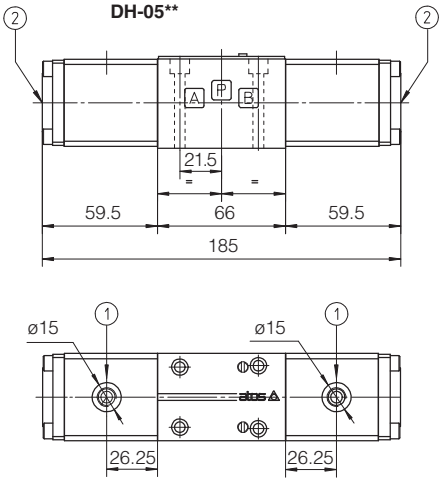

Mass: 1,6 Kg

9 INSTALLATION DIMENSIONS OF DK-1 [mm]

ISO 4401: 2005
Mounting surface: 4401-05-05-0-05 (see table P005)
(without X port)
Fastening bolts: 4 socket head screws M6x40 class 12.9
Tightening torque = 15 Nm
Diameter of ports A, B, P, T: Ø = 11,2 mm (max)
Diameter of port Y: Ø = 5 mm
Seals: 5 OR 2050, 1 OR 108

Mounting subplates: see tab. K280 (only version /Y)

Note: Line Y must be always present and no counter pressure are allowed on this line.

① Pilot pressure port G1/4”

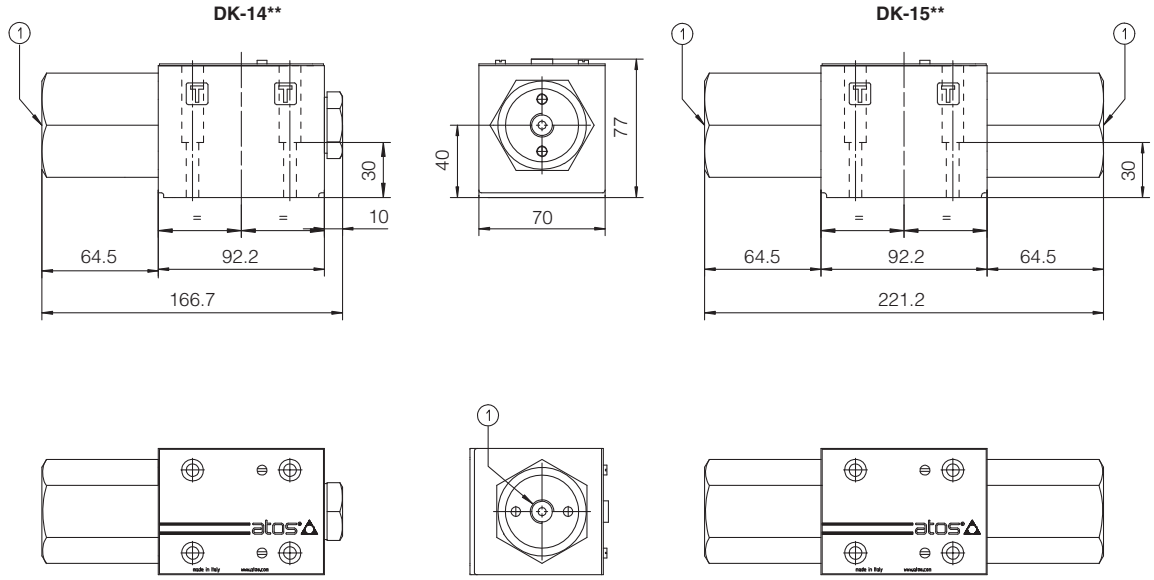

Mass: 3,4 Kg

Mass: 4,2 Kg

10 INSTALLATION DIMENSIONS OF DP-* [mm]

DP-1
ISO 4401: 2005
Mounting surface: 4401-05-05-0-05
(see table P005)
Fastening bolts:
4 socket head screws M6x40 class 12.9
Tightening torque = 15 Nm
Diameter of ports A, B, P, T : Ø = 11
Diameter of ports X,Y: Ø = 5 mm
Seals: 5 OR 2050, 2 OR 108

Mounting subplates: see tab. K280

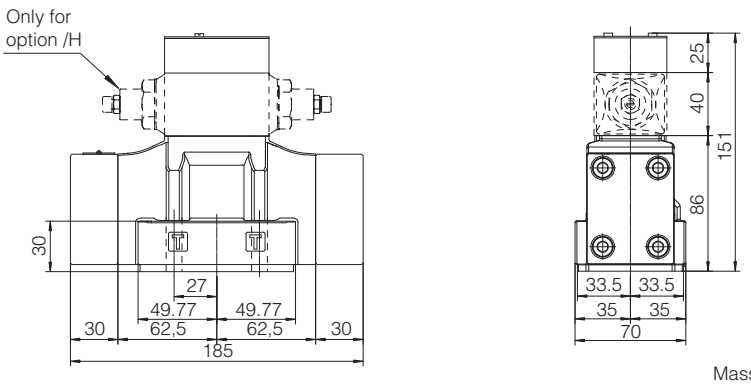

Mass: 7,1 Kg

DP-2

ISO 4401: 2005
Mounting surface: 4401-07-07-0-05
Fastening bolts:
4 socket head screws M10x50 class 12.9
Tightening torque = 70 Nm
2 socket head screws M6x45 class 12.9
Tightening torque = 15 Nm
Diameter of ports A, B, P, T: Ø = 20
Diameter of ports X,Y: Ø = 7 mm
Seals: 4 OR 130, 2 OR 2043

Mounting subplates: see tab. K280

Stroke adjustment device for option /S

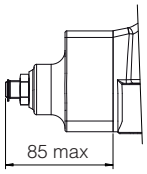

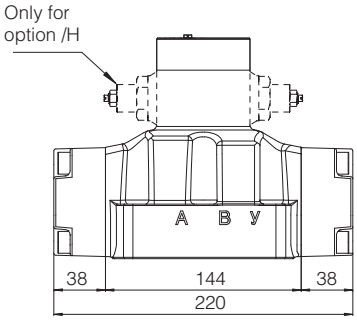

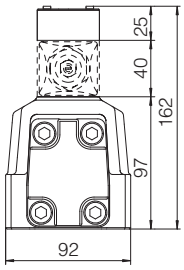

Mass: 10 Kg

DP-4

ISO 4401: 2005
Mounting surface: 4401-08-08-0-05
Fastening bolts:
6 socket head screws M12x60 class 12.9
Tightening torque = 125 Nm
Diameter of ports A, B, P, T : Ø = 24
Diameter of ports X,Y: Ø = 7 mm
Seals: 4 OR 4112, 2 OR 3056

Mounting subplates: see tab. K280

Stroke adjustment device for option /S

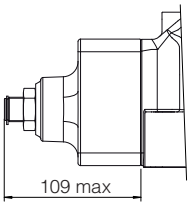

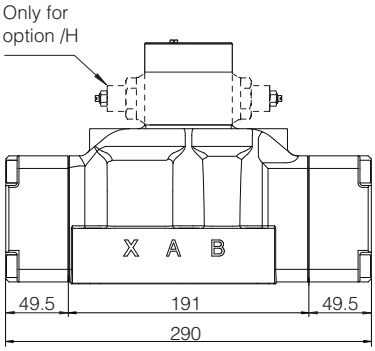

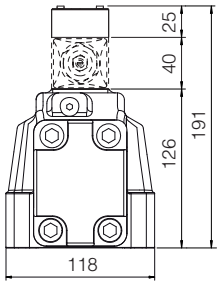

Mass: 16,5 Kg

DP-6

ISO 4401: 2005
Mounting surface: 4401-10-09-0-05
Fastening bolts:
6 socket head screws M20x80 class 12.9
Tightening torque = 600 Nm
Diameter of ports A, B, P, T : Ø = 34 mm
Diameter of ports X,Y: Ø = 7 mm
Seals: 4 OR 144, 2 OR 3056

Mounting subplates: see tab. K280

Stroke adjustment device for option /S

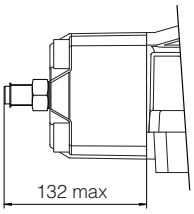

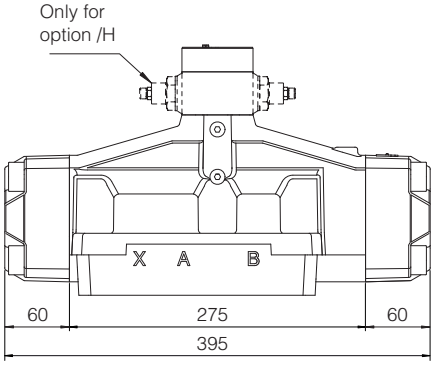

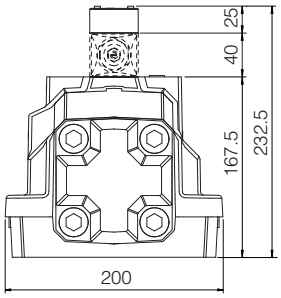

Mass: 38 Kg

Pneumatic operated directional valves

ISO 4401 sizes 06, 10, 16, 25 and 32

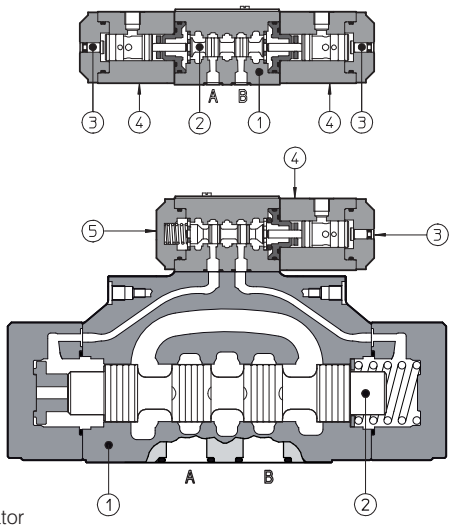

① Main body
② Spool
③ Manual override
④ Pneumatic actuator
⑤ Pilot valve

Pneumatic operated directional valves are spool type ②, three or four way, two or three position, designed to operate in oil hydraulic systems.
Available with single or double pneumatic actuator ④ with manual override.

Valve sizes and max flow:

DH-0 = size 06, flow up to 50 l/min
DK-1 = size 10, flow up to 160 l/min
DPH-2 = size 16, flow up to 300 l/min
DPH-4 = size 25, flow up to 700 l/min
DPH-6 = size 32, flow up to 1000 l/min

Max pressure:
350 bar for DH-0, DPH-2, DPH-4, DPH-6
315 bar for DK-1

1 MODEL CODE

DH-0	8	1	3	/	A	**	/	*

Directional control valve, size:
DH-0 = 06
DK-1 = 10
DPH-2 = 16
DPH-4 = 25
DPH-6 = 32

Type of actuator:
8 = single actuator
9 = double actuator

Valve configuration, see sections 4 and 5
0 = free, without springs
1 = spring centered, without detent
3 = spring offset external position
5 = 2 external positions, with detent
7 = center and external positions

Spool type, see sections 4 and 5

Series number

Seals material, see section 3:
- = NBR
PE = FKM

Options:
only for valve with single actuator:
/A = Actuator device mounted on side of port B (for DH and DK).
Actuator device mounted on side of port A of main body (for DPH)
only for DPH:
/D = internal drain
/E = external pressure
/H = adjustable chokes for controlling the main spool shifting time (meter-out to the pilot chambers of the main valve)
/H9= adjustable chokes for controlling the main spool shifting time (meter-in to the pilot chambers of the main valve)
/R = pilot pressure generator on port P at 4 bar
/S = main spool stroke adjustment

2 HYDRAULIC CHARACTERISTICS

Valve model		DH-0	DK-1	DPH-2	DPH-4	DPH-6
Max recommended flow	[l/min]	50	160	300	700	1000
Max pressure on port P, A, B (also X for DP)	[bar]	350	315	350		
Max pressure on port T	[bar]	see note **(1)**		250		
Max pressure on port L and Y	[bar]	–		null pressure		
Recommended oil pressure on piloting line	[bar]	–		Min = 4 Max = 250 The device **/R** generates an additional pressure drop, in order to ensure the minimum pilot pressure, for correct operation of the valves with internal pilot and fitted with spools type **0, 0/1, 4, 4/8, 5.** The device **/R** has to be fitted when the pressure drop in the valve, verified on flow versus pressure diagrams, is lower than the minimum pilot pressure value.		
Recommended pneumatic pressure **(2)**	[bar]	Min = 5 Max = 12	Min = 2 Max = 12	Min = 5 Max = 12		

(1) The max pressure on port T has to be not over 200% of pilot pressure
(2) Filtered and lubricated air

3 MAIN CHARACTERISTICS, SEALS AND FLUIDS - for other fluids not included in below table, consult our technical office

Assembly position / location	Any position for all valves except for type -*90 (without springs) that must be installed with horizontal axis if operated by impulses.		
Subplate surface finishing	Roughness index Ra 0,4 - flatness ratio 0,01/100 (ISO 1101)		
Compliance	RoHS Directive 2011/65/EU as last update by 2015/65/EU REACH Regulation (EC) n°1907/2006		
Ambient temperature	Standard execution = -30°C ÷ +70°C; /PE option = -20°C ÷ +70°C;		
Seals, recommended fluid temperature	NBR seals (standard) = -20°C ÷ +80°C, with HFC hydraulic fluids = -20°C ÷ +50°C FKM seals (/PE option) = -20°C ÷ +80°C		
Recommended viscosity	15÷100 mm²/s - max allowed range 2.8 ÷ 500 mm²/s		
Max fluid contamination level	ISO4406 class 20/18/15 NAS1638 class 9, see also filter section at www.atos.com or KTF catalog		
Hydraulic fluid	**Suitable seals type**	**Classification**	**Ref. Standard**
Mineral oils	NBR, FKM	HL, HLP, HLPD, HVLP, HVLPD	DIN 51524
Flame resistant without water	FKM	HFDU, HFDR	ISO 12922
Flame resistant with water	NBR	HFC	

4 CONFIGURATIONS and SPOOLS of valves type DH-*, DK-*

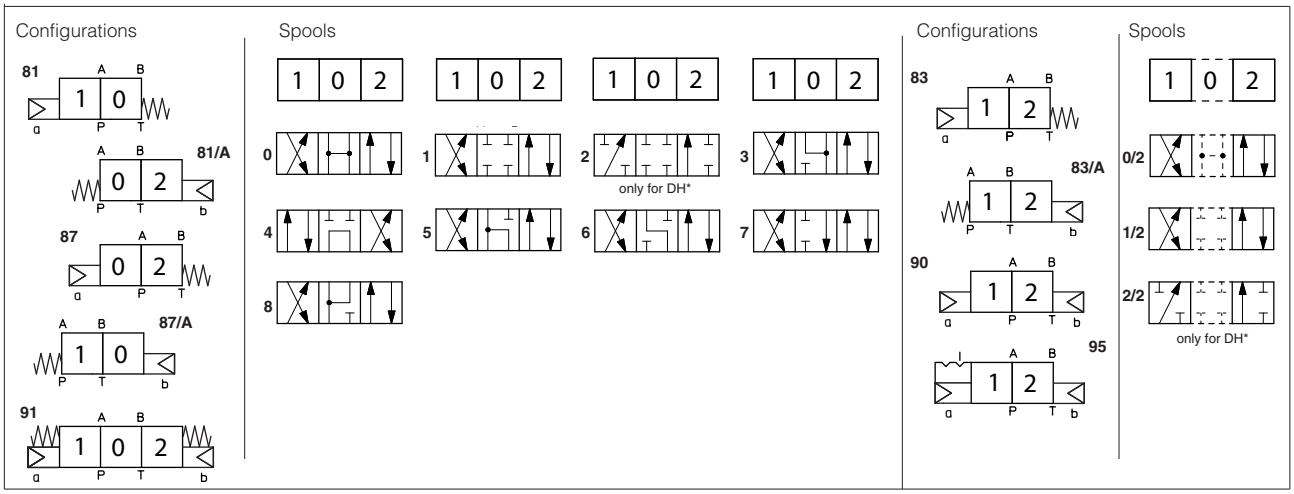

NOTES
- spools type **0** and **3** are also available as **0/1** and **3/1** with restricted oil passages in central position, from user ports to tank.
- spools type **1, 4** and **5** are also available as **1/1, 4/8** (only for DH-0) and **5/1.** They are properly shaped to reduce water-hammer shocks during the swiching.
- spools type **1, 1/2, 3, 8** are available as **1P, 1/2P, 3P, 8P** (only for DH-0) to limit valve internal leakages.

5 CONFIGURATIONS and SPOOLS of valves type DPH-*

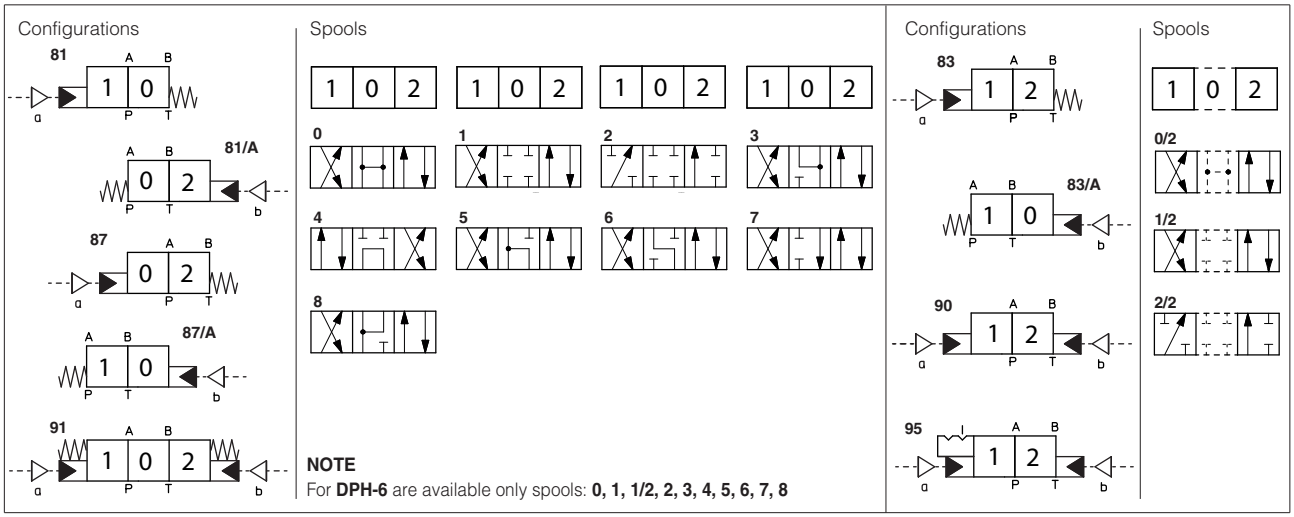

NOTE
For **DPH-6** are available only spools: **0, 1, 1/2, 2, 3, 4, 5, 6, 7, 8**

Special shaped spools
- spools type **0** and **3** are also available as **0/1** and **3/1** with restricted oil passages in central position, from user ports to tank.
- spools type **1, 4,** and **5** are also available as **1/1, 4/8** and **5/1** are properly shaped to reduce water-hammer shocks during the switching.

6 Q/Δp DIAGRAMS

DH-0	See note and diagrams on table E010 relating the DH* valve from which DH-0* are derivated
DK-1	See note and diagrams on table E025 relating the DKE valve from which DK-1* are derivated
DPH-2	See note and diagrams on table E085 relating the DPH*-2 valve from which DP-2* are derivated
DPH-4	See note and diagrams on table E085 relating the DPH*-4 valve from which DP-4* are derivated
DPH-6	See note and diagrams on table E085 relating the DPH*-6 valve from which DP-6* are derivated

7 INSTALLATION DIMENSIONS of VALVES type DH and DK [mm]

ISO 4401: 2005
Mounting surface: 4401-03-02-0-05
Fastening bolts: 4 socket head screws M5x50 class 12.9
Tightening torque = 8 Nm
Diameter of ports A, B, P, T: Ø = 7,5 mm (max)
Seals: 4 OR 108

DH-08**

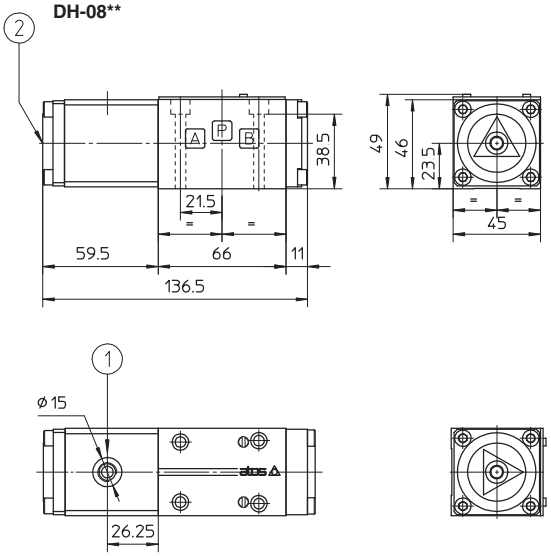

DH-09**

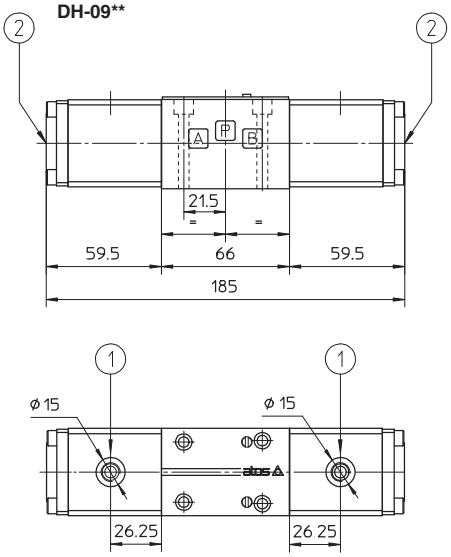

Mass: 1,2 Kg

Mass: 1,6 Kg

① Pilot pressure port G1/8"
② Manual override

Mounting subplates: see tab. E010

ISO 4401: 2005
Mounting surface: 4401-05-04-0-05
Fastening bolts: 4 socket head screws M6x40 class 12.9
Tightening torque = 15 Nm
Diameter of ports A, B, P, T: Ø = 11,2 mm (max)
Seals: 5 OR 2050

DK-18**

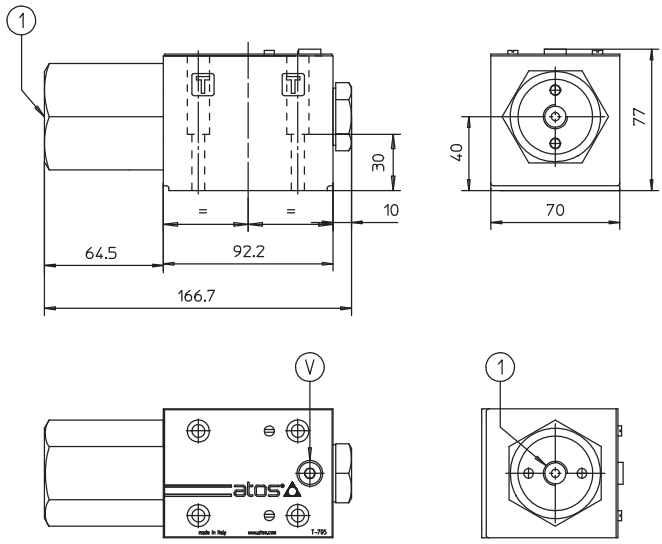

DK-19**

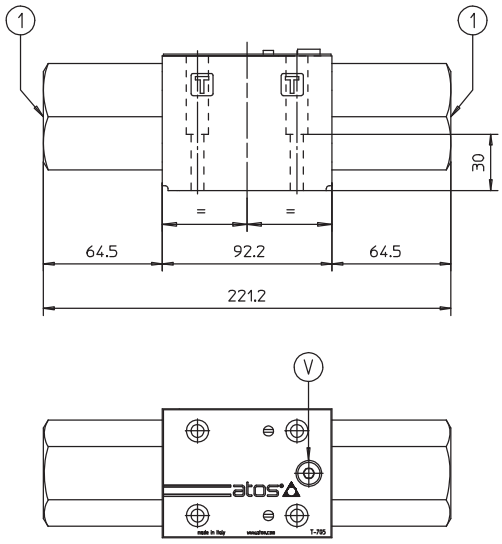

Mass: 3,4 Kg

Mass: 4,2 Kg

① Pilot pressure port G1/4"
Ⓥ Air bleed

Mounting subplates: see tab. E025

8 INSTALLATION DIMENSIONS of VALVES type DP [mm]

DPH-2

ISO 4401: 2005
Mounting surface: 4401-07-07-0-05

Fastening bolts:
4 socket head screws M10x50 class 12.9
Tightening torque = 70 Nm
2 socket head screws M6x45 class 12.9
Tightening torque = 15 Nm
Diameter of ports A, B, P, T : Ø = 20
Diameter of ports X,Y: Ø = 7 mm
Seals: 4 OR 130, 2 OR 2043

Stroke adjustment device for option /S

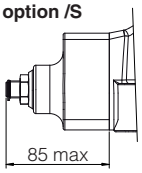

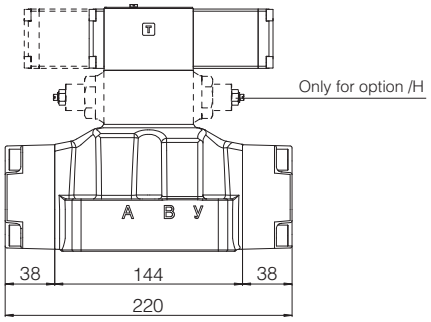

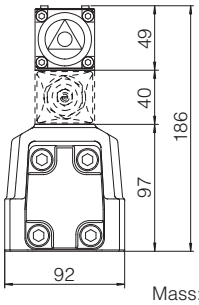

Mass: 11,5 Kg

DPH-4

ISO 4401: 2005
Mounting surface: 4401-08-08-0-05

Fastening bolts:
6 socket head screws M12x60 class 12.9
Tightening torque = 125 Nm
Diameter of ports A, B, P, T: Ø = 24
Diameter of ports X,Y: Ø = 7 mm
Seals: 4 OR 4112, 2 OR 3056

Stroke adjustment device for option /S

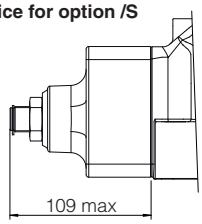

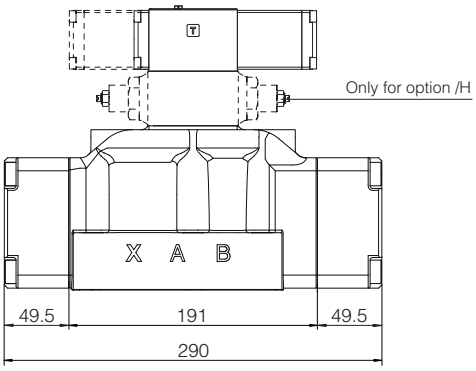

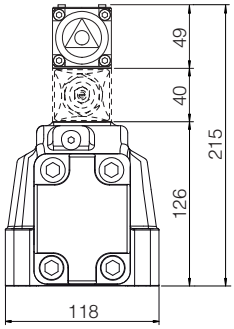

Mass: 18 Kg

DPH-6

ISO 4401: 2005
Mounting surface: 4401-10-09-0-05

Fastening bolts:
6 socket head screws M20x80 class 12.9
Tightening torque = 600 Nm
Diameter of ports A, B, P, T: Ø = 34 mm
Diameter of ports X,Y: Ø = 7 mm
Seals: 4 OR 144, 2 OR 3056

Stroke adjustment device for option /S

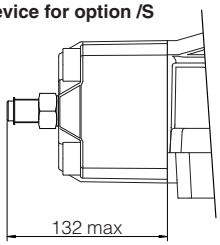

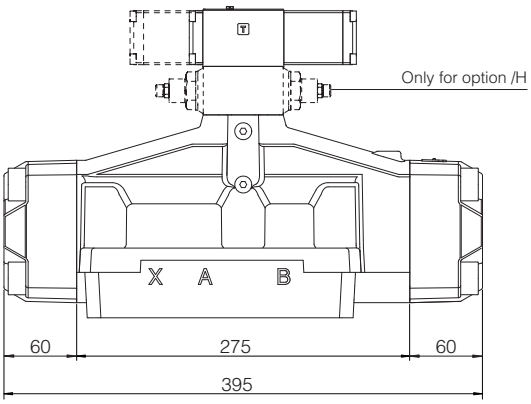

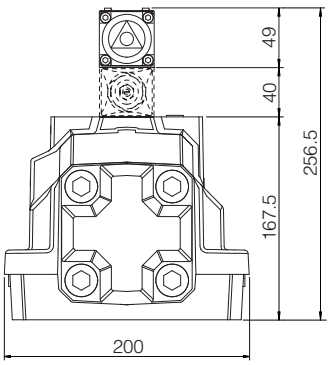

Mass: 39,5 Kg

Cartridge pressure relief valves type CART

screw-in mounting, direct operated

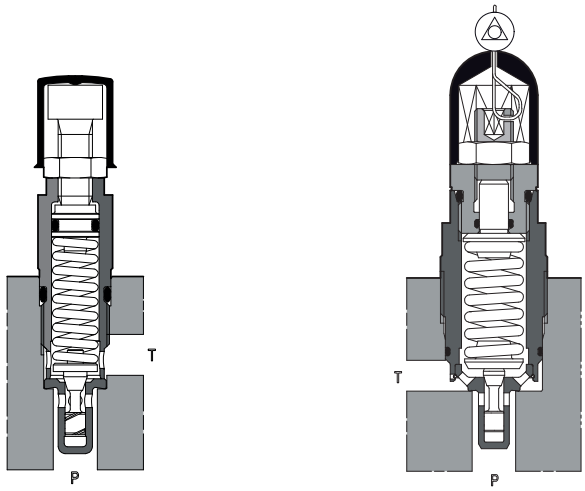

CART M-5/*** **CART M-6/***/RS**

CART are screw-in, direct operated pressure relief valves.
They are used to limit the max pressure in the hydraulic systems or to protect part of the circuit from overpressure.
They are available in six sizes for different flow and pressure ranges.

The cartridge execution is specifically designed to reduce the dimension of blocks and manifolds, without penalizing the functional characteristics.

Option **RS**, conforms to the Machine Directive (2006/42/CE), with factory preset and lead sealed regulation.
The factory pressure setting required by the costumer corresponds to the valve's cracking pressure.

Max flow: **120 l/min**
Max pressure: up to **420 bar**

1 MODEL CODE

CART	M-6	/	420	/	RS	/	*	**	/	*

CART: Screw-in relief cartridges

M-6:
Size:
M-3 = G1/2 **(1)**
M-4 = M14x1
M-5 = M20x1,5
M-6 = M33x1,5 **(1)**
ARE-15 = M32x1,5
ARE-20 = M35x1,5 **(1)**

420:
Max pressure:
see section 3

RS:
Options:
see section 5 for options availability and combination:
R = leak free execution **(2)**
RS = leak free execution plus lead sealed regulation conforming to 2006/42/CE

Manual override only for standard and /R option **(3)**:
V = regulating handwheel
VF = regulating knob
VS = regulating knob with safety locking

*****:
Only for RS option:
280 = factory pressure setting to be defined by the customer
min step: 1 bar - min pressure setting: 25 bar
(example 280 = 280 bar)

******: Series number

*****: Seals material, see section 4:
- = NBR
PE = FKM
BT = HNBR

For **PED** version see technical table CY010
(1) Available also in stainless steel execution, see technical table CW010
(2) Standard execution of CART M-4 and CART ARE-20 provides the leak free feature, then the /R is always present in the valve model code, with the exception in case of RS options
(3) For handwheel and knob features, see sections 7, 8. For their availability see section 5

2 HYDRAULIC SYMBOLS

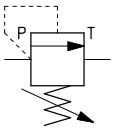

CART
CART **/R

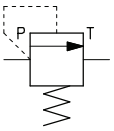

CART **/RS

3 HYDRAULIC CHARACTERISTICS

Valve model		CART M-3	CART M-4	CART M-5	CART M-6	CART ARE-15	CART ARE-20
Max pressure setting [bar]	**STANDARD**	50 100 210 350 420	100 210 350 420	50 100 210 250 350	50 100 210 350 500	15 50 75 150 250 350 420	50 100 210 315 400
	R				50 100 210 350 500	15 50 75 150 250 420	
	RS		220 270 350		220 270 330 350	150 190 230	
Pressure range [bar]	**STANDARD (1)**	4÷50 6÷100 7÷210 8÷350 15÷420	6÷100 7÷210 8÷350 15÷420	2÷50 3÷100 5÷210 7÷250 8÷350	2÷50 3÷100 8÷210 15÷350 15÷500	2÷15 3÷50 4÷75 8÷150 8÷250 8÷350 15÷420	3÷50 5÷100 6÷210 8÷315 10÷400
	R (1)				2÷50 3÷100 10÷210 15÷350 15÷500	2÷15 3÷50 4÷75 8÷150 8÷250 15÷420	
	RS (1)		210÷260 260÷300 300÷370		200÷250 250÷290 290÷350 310÷370	130÷170 170÷210 210÷250	
Max pressure on port T [bar]		50	50	50	50	50	50
Max flow [l/min]	**STANDARD, R**	2,5	15	35	40	75	120
	RS		15		60	100	

(1) The values correspond to the min and max regulation of the valve's craking pressure

4 MAIN CHARACTERISTICS, SEALS AND FLUIDS - for other fluids not included in below table, consult our technical office

Assembly position	Any position
Compliance	RoHS Directive 2011/65/EU as last update by 2015/65/EU REACH Regulation (EC) n°1907/2006
Ambient temperature	Standard execution = -30°C ÷ +70°C /PE option = -20°C ÷ +70°C /BT option = -40°C ÷ +70°C
Seals, recommended fluid temperature	NBR seals (standard) = -20°C ÷ +80°C, with HFC hydraulic fluids = -20°C ÷ +50°C FKM seals (/PE option) = -20°C ÷ +80°C HNBR seals (/BT option) = -40°C ÷ +60°C, with HFC hydraulic fluids = -40°C ÷ +50°C
Recommended viscosity	15÷100 mm²/s - max allowed range 2,8 ÷ 500 mm²/s
Max fluid contamination level	ISO 4406 class 20/18/15 NAS 1638 class 9, see also filter section www.atos.com or KTF catalog

Hydraulic fluid	Suitable seals type	Classification	Ref. Standard
Mineral oils	NBR, FKM, HNBR	HL, HLP, HLPD, HVLP, HVLPD	DIN 51524
Flame resistant without water	FKM	HFDU, HFDR	ISO 12922
Flame resistant with water	NBR, HNBR	HFC	

5 OPTIONS AVAILABILITY

Valve model		CART M-3	CART M-4	CART M-5	CART M-6	CART ARE-15	CART ARE-20
Option	**/R**		STANDARD		●	●	STANDARD
	/RS		●		●	●	
	/V	●			●	●	●
	/VF				●	●	
	/VS				●	●	
Combinated option (1)	**/RV**				●	●	●
	/RVF				●	●	
	/RVS				●	●	

(1) RV = leak free and regulating handwheel
RVF = leak free and regulating knob
RVS = leak free and regulating knob with safety lock

6 REGULATED PRESSURE VERSUS FLOW DIAGRAMS (based on mineral oil ISO VG 46 at 50°C)

CART M-3

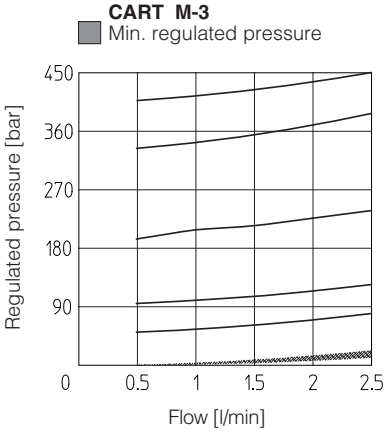

CART M-4 **/R

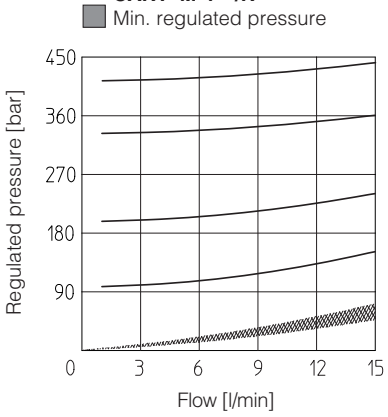

CART M-5

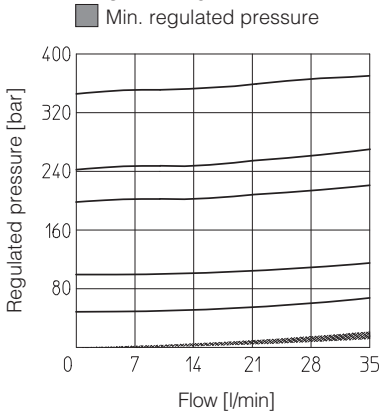

CART M-6

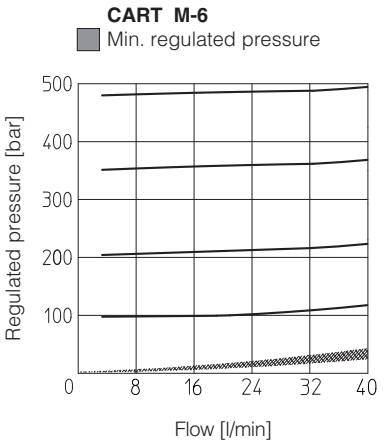

CART ARE-15

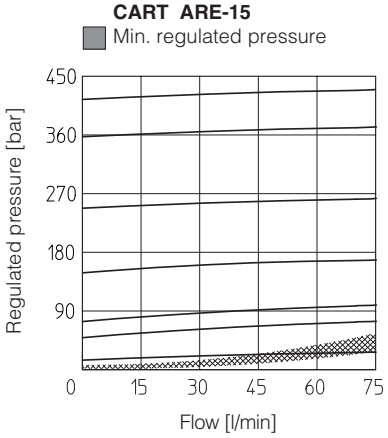

CART ARE-20 **/R

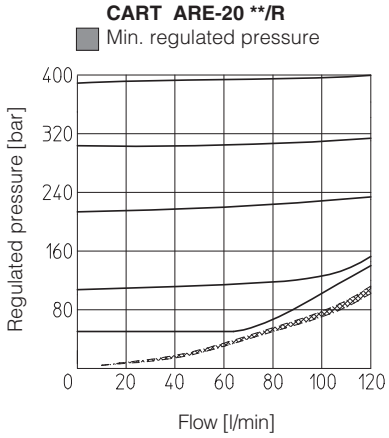

CART M-4 **/RS

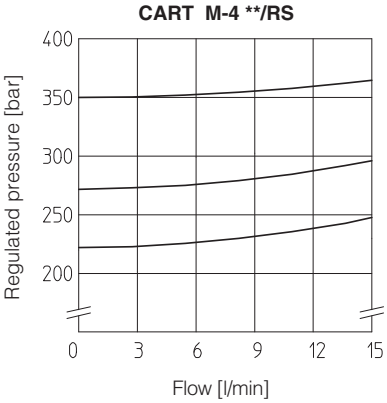

CART M-6 **/RS

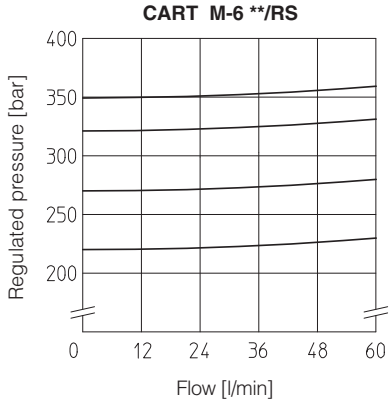

CART ARE-15 **/RS

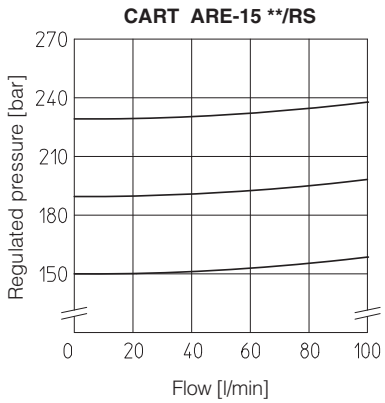

7 CAVITY AND DIMENSIONS FOR CART M-3, M-4 AND M-5 [mm]

CART M-3

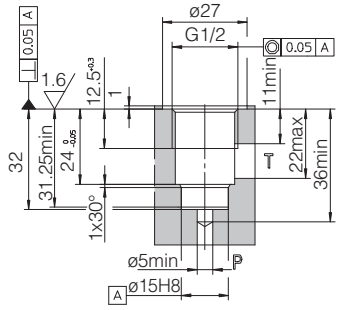

Standard

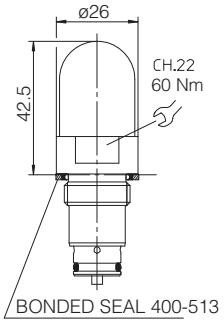

Option /V

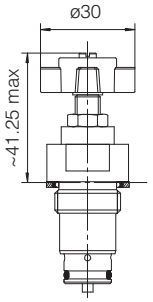

CART M-4

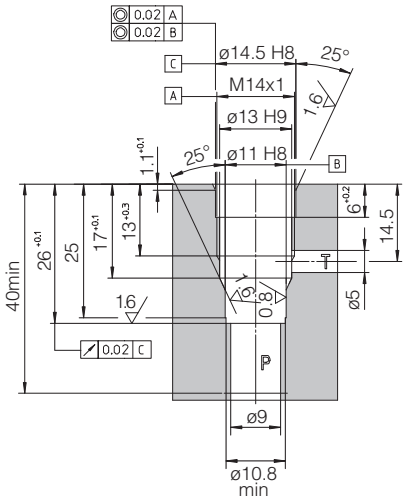

Cavity drawing not in scale
with the cartridge

Standard

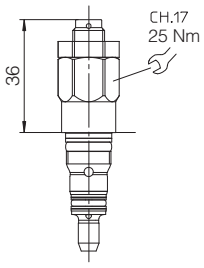

Option /RS

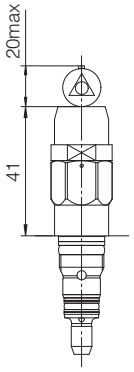

CART M-5

Standard

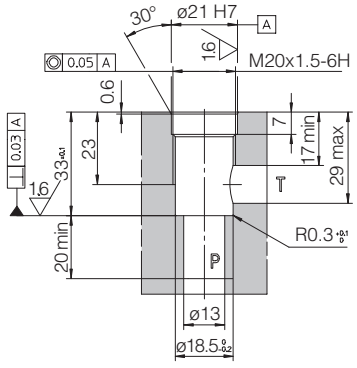

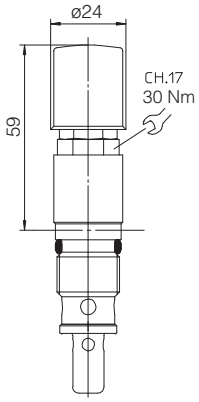

8 CAVITY AND DIMENSIONS FOR CART M-6, CART ARE-15 AND ARE-20 [mm]

CART M-6

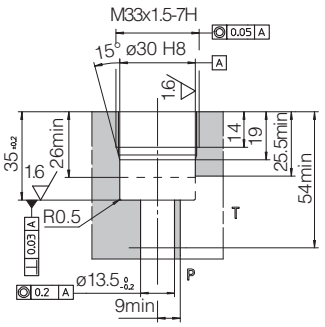

Standard

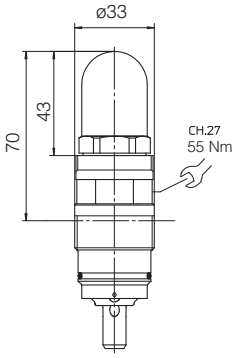

Option /RS

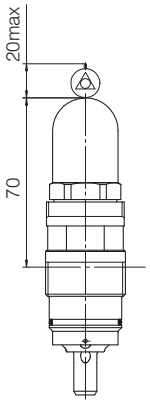

Option /V

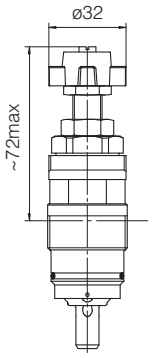

Option /VF /VS

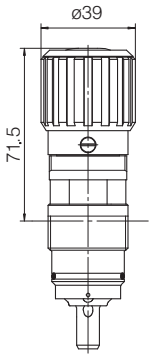

CART ARE-15

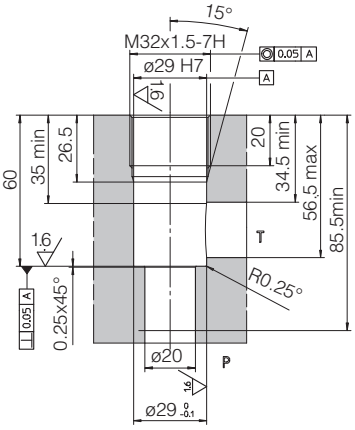

Standard

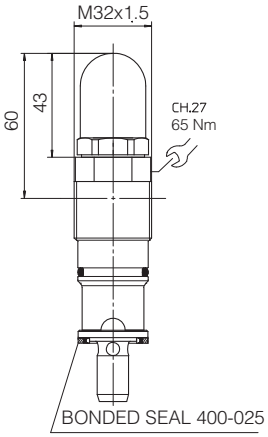

Option /RS

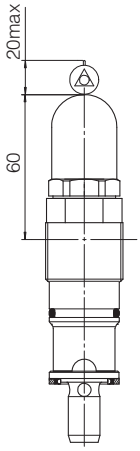

Option /V

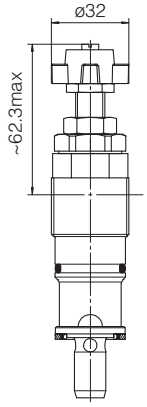

Option /VF /VS

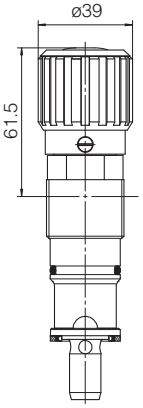

CART ARE-20

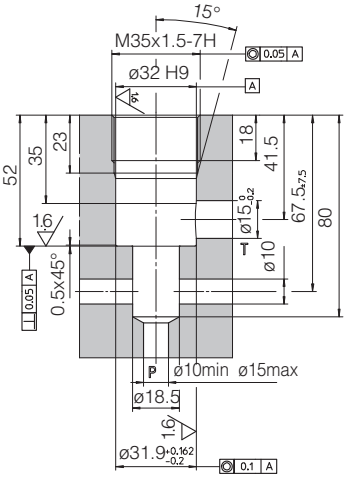

Standard

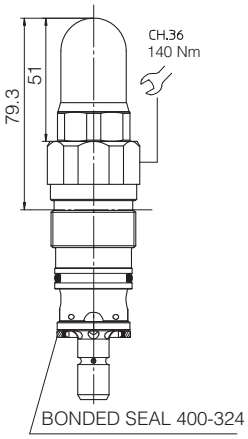

Option /V

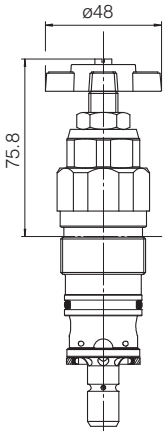

Pressure relief valves type ARE

direct operated, in line mounting

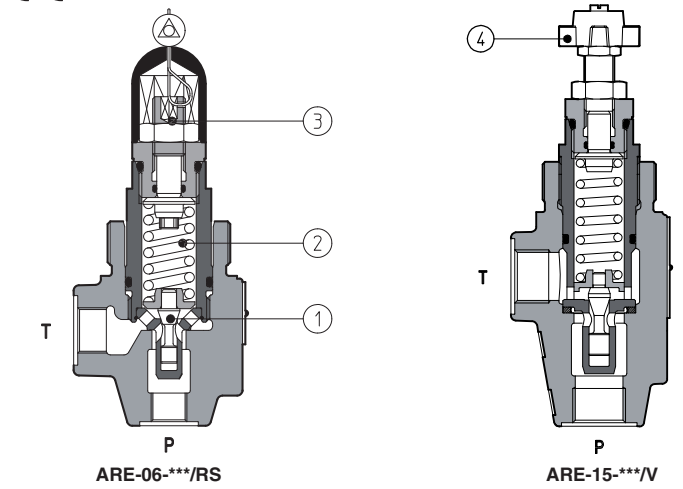

ARE-06-*/RS** **ARE-15-***/V**

ARE are poppet type, directed operated pressure relief valves, with threaded ports for in line mounting.

The flow P→T is permitted when pressure force acting on the poppet ① overcomes the force of the spring ②.

Regulation is operated by means of a screw ③ or optionally by means of a handwheel ④ acting on the spring.

Clockwise rotation increases the pressure.

These valves are available in two sizes, with port P=G 1/4" or G 1/2".

Option **RS**, conforms to the Machine Directive (2006/42/CE), with factory preset and lead sealed regulation.
The factory pressure setting required by the costumer corresponds to the valve's cracking pressure.

Max flow: **100 l/min**:
Max pressure: ARE-06 up to **500 bar**
ARE-15 up to **420 bar**

1 MODEL CODE

ARE	-	06	/	350	/	RS	/	*	**	/	*

ARE = pressure relief valve with thread connections

Available also in cartridge execution, see tab. C010

Size:
06 = port P G 1/4"
15 = port P G 1/2"

Max pressure:
see section 3

Options **(1)**:
R = leak free execution
RS = leak free execution plus lead sealed regulation conforming to 2006/42/CE

Manual override only for standard and /R option:
V = regulating handwheel
VF = regulating knob
VS = regulating knob with safety locking

Only for RS options:
280 = factory pressure setting to be defined depending to the customer requirement (example 280 = 280 bar)

Series number

Seals material, see section 4:
- = NBR
PE = FKM
BT = HNBR

For **PED** version see technical table CY020

(1) Possible combined options:
RV = leak free and regulating handweel
RVF = leak free and regulating knob
RVS = leak free and regulating knob with safety locking

2 HYDRAULIC SYMBOLS

Hydraulic symbol

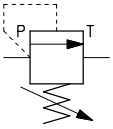

ARE-06
ARE-15

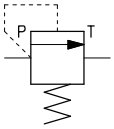

ARE-06 **/RS
ARE-15 **/RS

3 HYDRAULIC CHARACTERISTICS

Valve model		ARE-06					ARE-15						
Max pressure setting [bar]	**Standard**	50	100	210	350	500	15	50	75	150	250	350	420
	/R	50	100	210	350	500	15	50	75	150	250		420
	/RS	220	270	330	350				150	190	230		
Pressure range [bar]	**Standard**	2÷50	3÷100	10÷210	15÷350	30÷500	2÷15	3÷50	4÷75	8÷150	8÷250	30÷350	30÷420
	/R (1)	2÷50	3÷100	10÷210	15÷350	30÷500	2÷15	3÷50	4÷75	8÷150	8÷250	30÷420	
	/RS (1)	200÷250	250÷290	290÷350	310÷370			130÷170	170÷210	210÷250			
Max pressure port T [bar]		50					50						
Max flow [l/min]	**Standard, /R**	40					75						
	/RS	60					100						

(1) The values correspond to the min and max regulation of the valve's craking pressure

4 MAIN CHARACTERISTICS, SEALS AND FLUIDS - for other fluids not included in below table, consult our technical office

Assembly position	Any position		
Compliance	RoHS Directive 2011/65/EU as last update by 2015/863/EU REACH Regulation (EC) n°1907/2006		
Ambient temperature	Standard execution = -30°C ÷ +70°C /PE option = -20°C ÷ +70°C /BT option = -40°C ÷ +70°C		
Seals, recommended fluid temperature	NBR seals (standard) = -20°C ÷ +60°C, with HFC hydraulic fluids = -20°C ÷ +50°C FKM seals (/PE option) = -20°C ÷ +80°C HNBR seals (/BT option) = -40°C ÷ +60°C, with HFC hydraulic fluids = -40°C ÷ +50°C		
Recommended viscosity	15÷100 mm²/s - max allowed range 2,8 ÷ 500 mm²/s		
Fluid contamination class	ISO 4406 class 21/19/16 NAS 1638 class 10, in line filters of 25 μm (β25 ≥75 recommended)		
Hydraulic fluid	**Suitable seals type**	**Classification**	**Ref. Standard**
Mineral oils	NBR, FKM, HNBR	HL, HLP, HLPD, HVLP, HVLPD	DIN 51524
Flame resistant without water	FKM	HFDU, HFDR	ISO 12922
Flame resistant with water	NBR, HNBR	HFC	

5 REGULATED PRESSURE VERSUS FLOW DIAGRAMS (based on mineral oil ISO VG 46 at 50°C)

ARE-06 and ARE-06/R

Min. regulated pressure

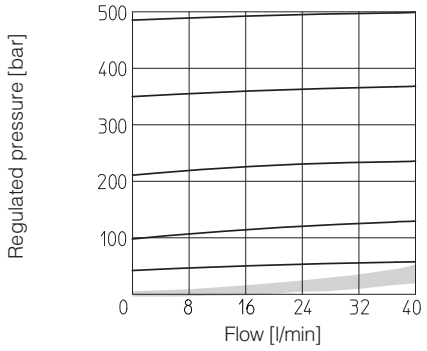

ARE-15 and ARE-15/R

Min. regulated pressure

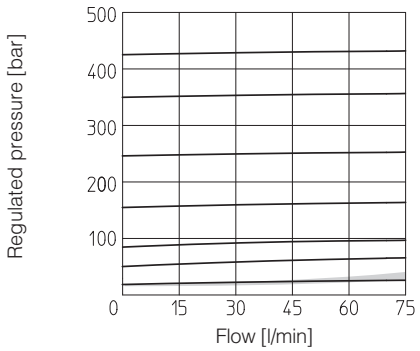

ARE-06 /RS

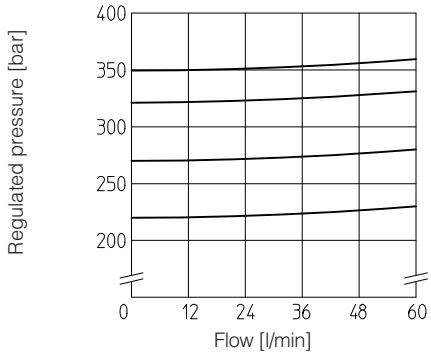

ARE-15 /RS

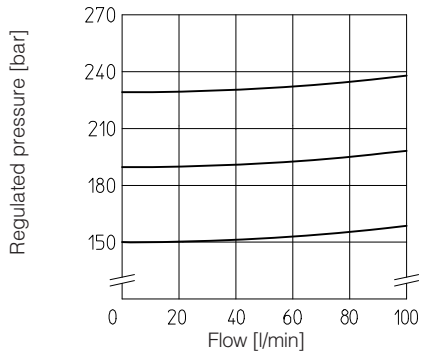

6 DIMENSIONS [mm]

ARE-06

P = INLET PORT G 1/4”
T = OUTLET PORT G 3/8”
Locking ring for fastening the valve.
Model code: SP-6-RE-310030

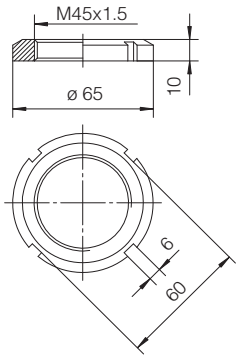

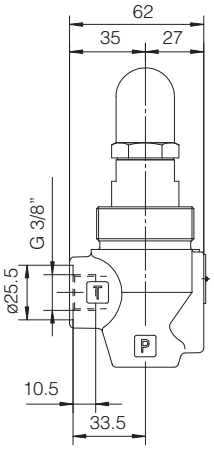

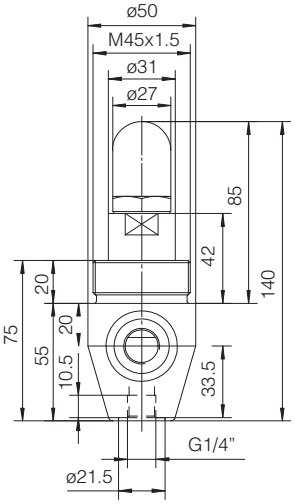

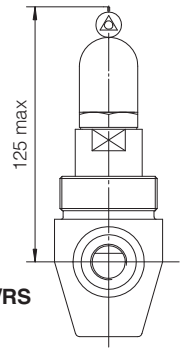

Option /RS

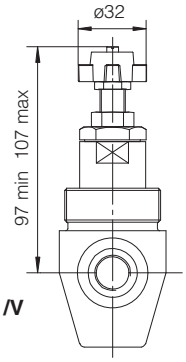

Option /V

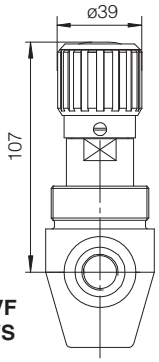

Option /VF /VS

Mass: 1 Kg

ARE-15

P = INLET PORT G 1/2”
T = OUTLET PORT G 1/2”
Locking ring for fastening the valve.
Model code: SP-6-RE-310030

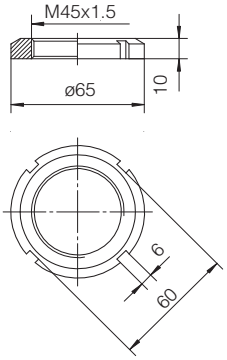

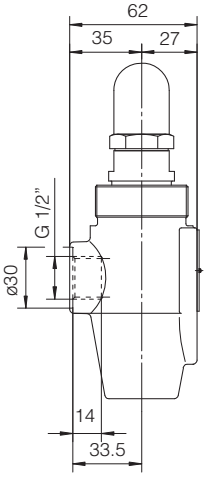

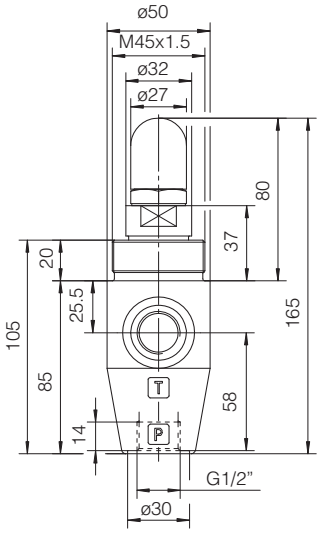

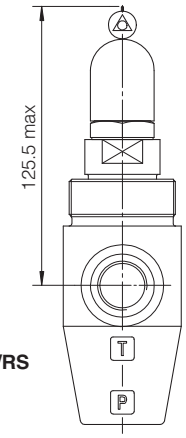

Option /RS

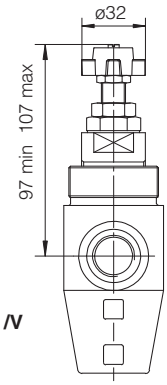

Option /V

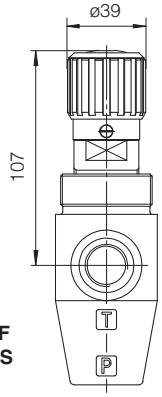

Option /VF /VS

Note:
For handwheel features, see technical table K150.

Mass: 1,3 Kg

Pressure relief valves type ARAM

two stage, in line mounting - G 3/4" and G 1¹/₄" threaded ports

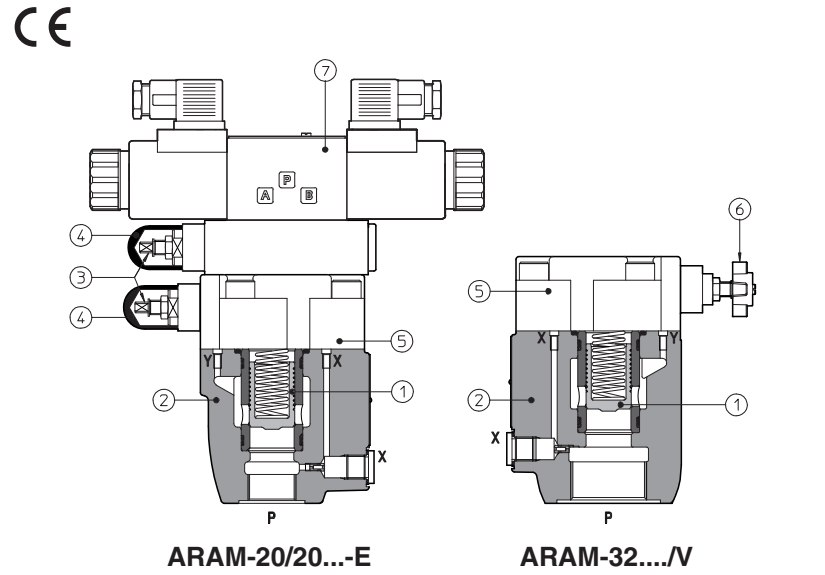

ARAM-20/20...-E **ARAM-32..../V**

ARAM are two stage pressure relief valves with balanced poppet, designed with threaded ports for in-line mounting.

In standard versions the piloting pressure of the poppet ① of the main stage ② is regulated by means of a grub screw ③ protected by cap ④ installed in the cover ⑤.

Optional versions with setting adjustment by handwheel ⑥ instead of the grub screw are available on request.
Clockwise rotation increases the pressure.

ARAM can be equipped with a pilot solenoid valve ⑦ for venting or for different pressure setting, type:

- DHE for AC and DC supply, high performances with **cURus** certified solenoids
- DHL for AC and DC supply, compact execution

Threaded ports: **G 3/4", G 1¹/₄"**
Max flow: **350, 500 l/min**
Max pressure up to **350 bar**

1 MODEL CODE

ARAM	-	20	/	20	/	210	/	100/100	/	V	-	E	X	24DC	**	/	*

ARAM = pressure relief valve threated port connections

Size:
20= port P - G 3/4"
32= port P - G 1¹/₄"

Setting pressure and venting option **(1)**:
- =one setting pressure without option
10=one setting pressure with venting, with de-energized solenoid
11=one setting pressure with venting, with energized solenoid
20=two setting pressure with venting, with de-energized solenoid
21=two setting pressure with venting, with energized solenoid
22=two setting pressure without venting
32=three setting pressure without venting

Setting: see section 4 for available setting

Pressure range of second/third setting **(1)**:
50 = 4÷50 bar **100** = 6÷100 bar
210 = 7÷210 bar **350** = 8÷350 bar

Options, see section 7
E V WP Y

Pilot valve **(1)**:
E = DHE for AC and DC supply, high performances with **cURus** certified solenoids
L = DHL for AC and DC supply, compact execution

X = without connector **(1):**
See section 10 for available connectors, to be ordered separately
-00-AC = AC solenoid valve without coils
-00-DC = DC solenoid valve without coils

Voltage code, see section 6 **(1)**:

Series number

Seals material, see section 11 :
- = NBR
PE = FKM
BT = HNBR **(2)**

For **PED** version see technical table CY045

(1) Only for ARAM with solenoid valve for venting and/or for the selection of the setting pressure.
(2) Not available for -L version (DHL pilot valve)

2 HYDRAULIC SYMBOL

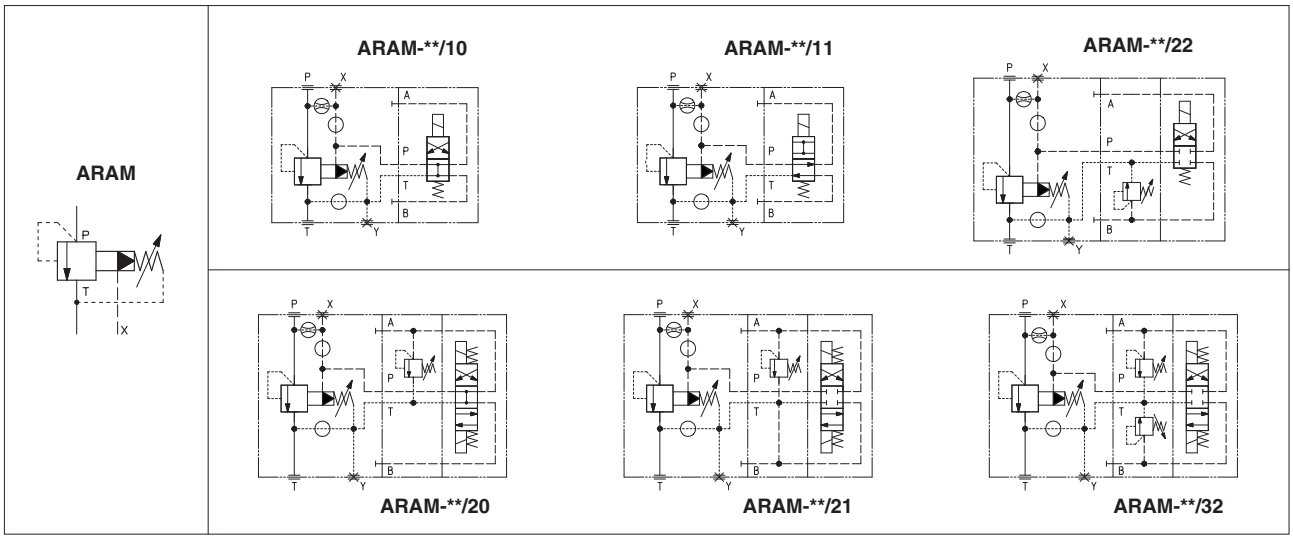

3 GENERAL CHARACTERISTICS

Assembly position	Any position
Subplate surface finishing to ISO 4401	Acceptable roughness index, Ra ≤0,8 recommended Ra 0,4 - flatness ratio 0,01/100
MTTFd valves according to EN ISO 13849	75 years, see technical table P007
Ambient temperature range	**Standard** = -30°C ÷ +70°C **/PE** option = -20°C ÷ +70°C **/BT** option = -40°C ÷ +70°C
Storage temperature range	**Standard** = -30°C ÷ +80°C **/PE** option = -20°C ÷ +80°C **/BT** option = -40°C ÷ +80°C
Surface protection	Body: zinc coating with black passivation Coil: zinc nickel coating (DC version) plastic incapsulation (AC version)
Corrosion resistance	Salt spray test (EN ISO 9227) > 200 h
Compliance	CE to Low Voltage Directive 2014/35/EU RoHS Directive 2011/65/EU as last update by 2015/65/EU REACH Regulation (EC) n°1907/2006

4 HYDRAULIC CHARACTERISTICS

Valve model	**ARAM-20**	**ARAM-32**
Setting [bar]	50; 100;	210; 350
Pressure range [bar]	4÷50; 6÷100;	7÷210; 8÷350
Max pressure [bar]	Ports P, X = 350 Ports T, Y = 210 (without pilot solenoid valve) For version with pilot solenoid valve, see technical tables E015 and E018	
Max flow [l/min]	350	500

5 ELECTRICAL CHARACTERISTICS

Insulation class	**H** (180°C) for DC coils; **F** (155°C) for AC coils Due to the occuring surface temperatures of the solenoid coils, the European standards EN ISO 13732-1 and EN ISO 4413 must be taken into account
Protection degree to DIN EN 60529	**IP 65** (with connectors correctly assembled)
Relative duty factor	100%
Supply voltage and frequency	See section 6
Supply voltage tolerance	± 10%
Certification	**cURus** North American standard - only for DHE pilot valve

6 COIL VOLTAGE

External supply nominal voltage ± 10%	**Voltage code**	Type of connector	-EX Power consumption (2)	-LX Power consumption (2)	Code of spare coil -EX	Code of spare coil -LX
12 DC	**12 DC**	666 or 667	30W	29W	COE-12DC	COL-12DC
14 DC	**14 DC**				COE-14DC	COL-14DC
110 DC	**110 DC**				COE-110DC	COL-110DC
220 DC	**220 DC**				COE-220DC	COL-220DC
110/50 AC (1)	**110/50/60 AC**	666 or 667	58VA (3)	58VA (3)	COE-110/50/60AC	COL-110/50/60AC
115/60 AC	**115/60 AC**		80VA (3)		COE-115/60AC	COL-115/60AC
230/50 AC (1)	**230/50/60 AC**		58VA (3		COE-230/50/60AC	COL-230/50/60AC
230/60 AC	**230/60 AC**		80VA (3)		COE-230/60AC	COL-230/60AC

(1) For other supply voltages available on request see technical tables E015, E018.
(2) Coil can be supplied also with 60 Hz of voltage frequency: in this case the performances are reduced by 10 ÷ 15% and the power consumption is 55 VA (DHL) and 58 VA (DHE)
(3) Average values based on tests performed at nominal hydraulic condition and ambient/coil temperature of 20°C.
(4) When solenoid is energized, the inrush current is approx 3 times the holding current.

7 OPTIONS

/E = external pilot
/V = regulating handwheel instead of grub screw protected by cap (for handwheel features, see table K150)
/WP = prolunged manual override protected by rubber cap (only for ARAM with pilot solenoid valve)
/Y = external drain (only for ARAM with pilot solenoid valve)

8 REGULATED PRESSURE VERSUS FLOW DIAGRAMS based on mineral oil ISO VG 46 at 50°C

ARAM-20

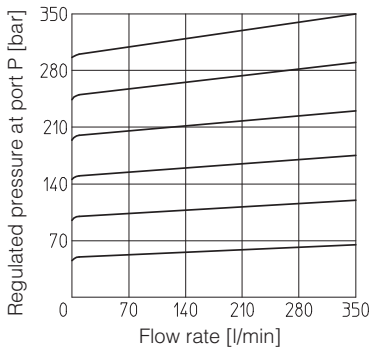

ARAM-32

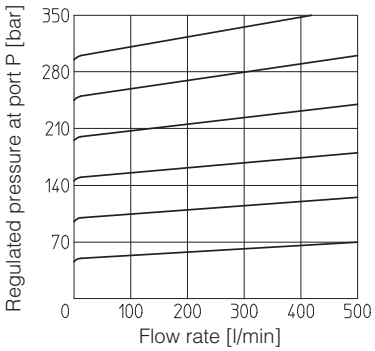

9 MINIMUM PRESSURE VERSUS FLOW DIAGRAMS based on mineral oil ISO VG 46 at 50°C

ARAM-20

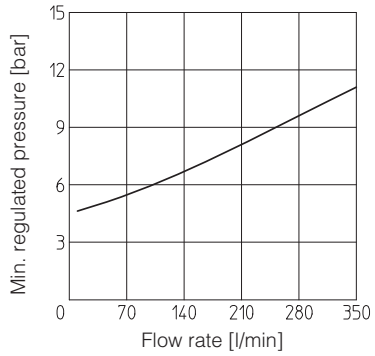

ARAM-32

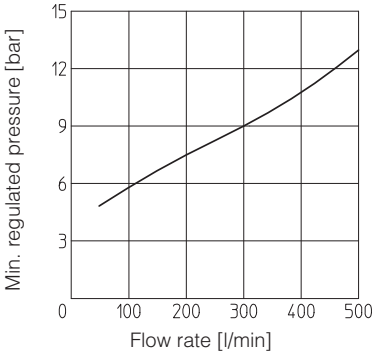

10 ELECTRIC CONNECTORS ACCORDING TO DIN 43650 for ARAM with solenoid valve (to be ordered separately, see tech table K800)

666 = standard connector IP-65, suitable for direct connection to electric supply source
667 = as 666, but with built-in signal led. Available for power supply voltage 24 AC or DC, 110 AC or DC, 220 AC or DC

11 SEALS AND HYDRAULIC FLUID - for other fluids not included in below table, consult our technical office

Seals, reccomended fluid temperature	NBR seals (standard) = -20°C ÷ +80°C, with HFC hydraulic fluids = -20°C ÷ +50°C FKM seals (/PE option) = -20°C ÷ +80°C HNBR seals (/BT option) = -40°C ÷ +60°C, with HFC hydraulic fluids = -40°C ÷ +50°C		
Recommended viscosity	15÷100 mm²/s - max allowed range 2,8 ÷ 500 mm²/s		
Max fluid contamination level	ISO4406 class 20/18/15 NAS1638 class 9, see also filter section at www.atos.com or KTF catalog		
Hydraulic fluid	**Suitable seals type**	**Classification**	**Ref. Standard**
Mineral oils	NBR, FKM, HNBR	HL, HLP, HLPD, HVLP, HVLPD	DIN 51524
Flame resistant without water	FKM	HFDU, HFDR	ISO 12922
Flame resistant with water	NBR, HNBR	HFC	

12 DIMENSIONS [mm]

ARAM-20

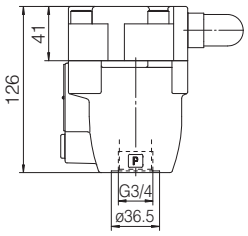

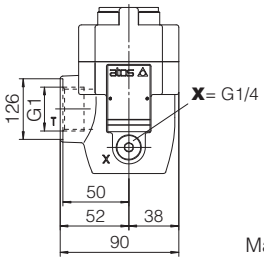

Mass: 3,9 Kg

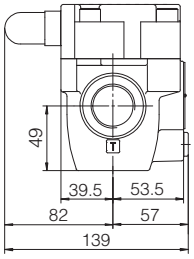

X = port connection for external pilot
Y = port connection for external drain

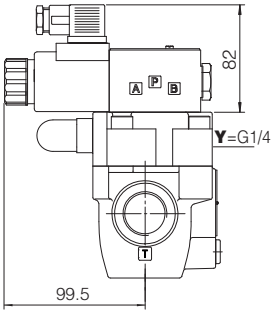

ARAM-20/10/-EX**
ARAM-20/11/-EX**

Mass: 5,7 Kg

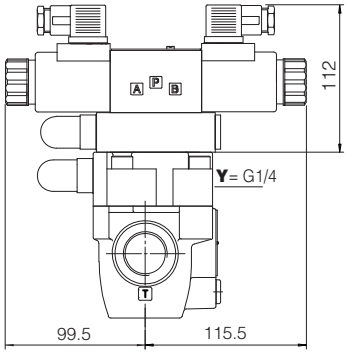

ARAM-20/20/-EX**
ARAM-20/21/-EX**

Mass: 7,7 Kg

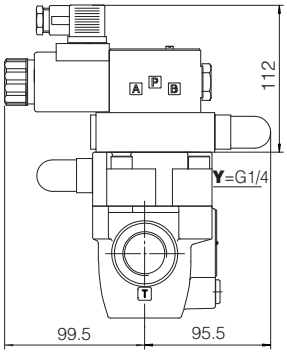

ARAM-20/22/-EX**

Mass: 7,2 Kg

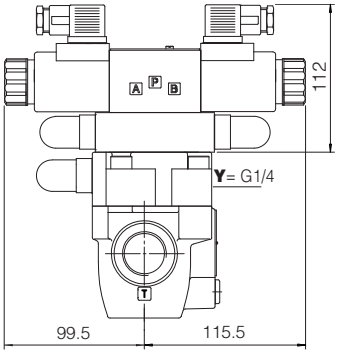

ARAM-20/32/-EX**

Mass: 8 Kg

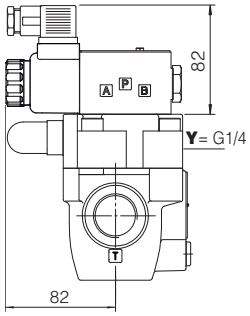

ARAM-20/10/-LX**
ARAM-20/11/-LX**

Mass: 5,5 Kg

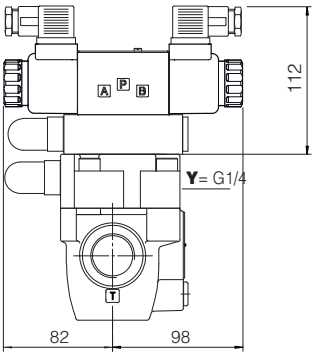

ARAM-20/20/-LX**
ARAM-20/21/-LX**

Mass: 7,3 Kg

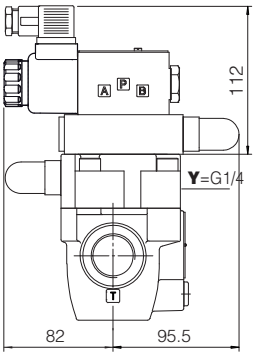

ARAM-20/22/-LX**

Mass: 7 Kg

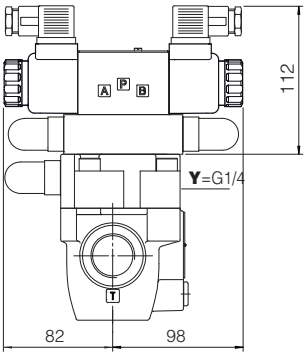

ARAM-20/32/-LX**

Mass: 7,6 Kg

Overall dimensions refer to valves **DC** voltage, with connectors type 666

ARAM-32

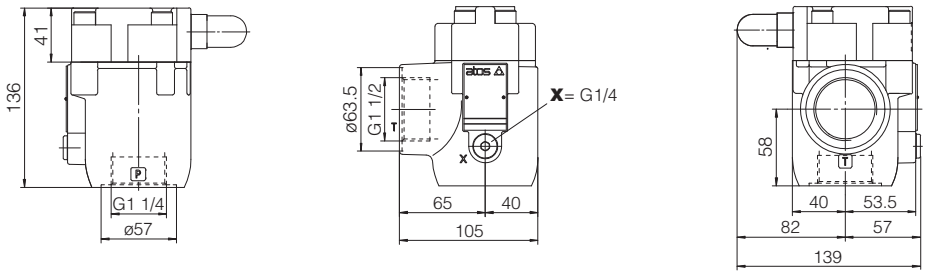

X = port connection for external pilot
Y = port connection for external drain

Mass: 4,7 Kg

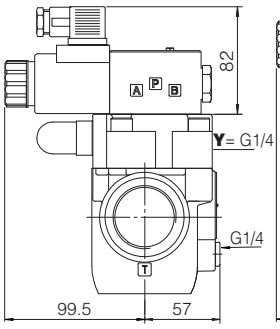

ARAM-32/10/-EX**
ARAM-32/11/-EX**

Mass: 6,5 Kg

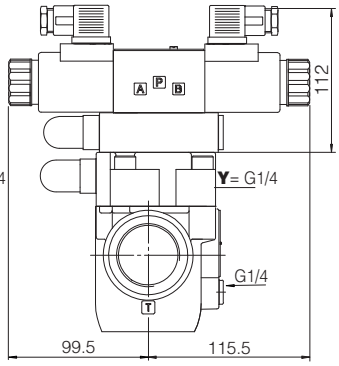

ARAM-32/20/-EX**
ARAM-32/21/-EX**

Mass: 8,5 Kg

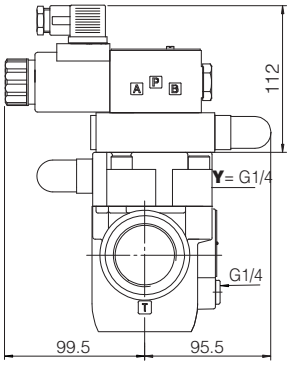

ARAM-32/22/-EX**

Mass: 7,9 Kg

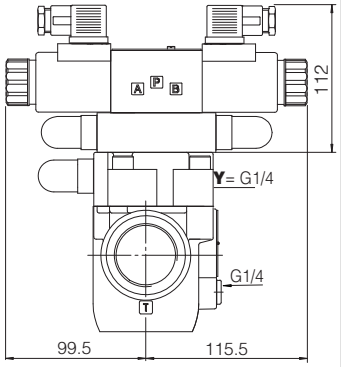

ARAM-32/32/-EX**

Mass: 8,8 Kg

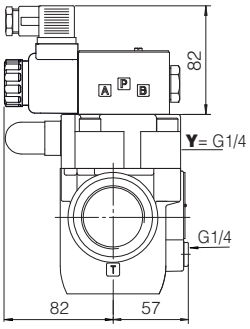

ARAM-32/10/-LX**
ARAM-32/11/-LX**

Mass: 6,3 Kg

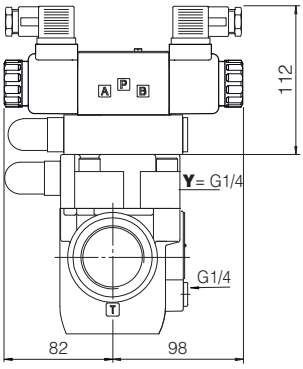

ARAM-32/20/-LX**
ARAM-32/21/-LX**

Mass: 8,1 Kg

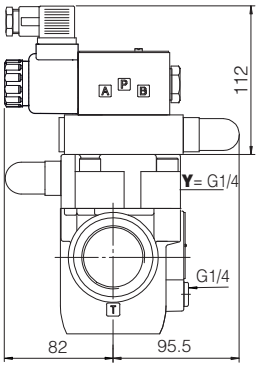

ARAM-32/22/-LX**

Mass: 7,7 Kg

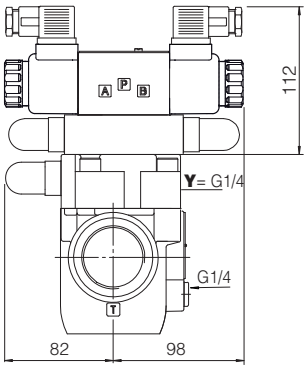

ARAM-32/32/-LX**

Mass: 8,4 Kg

Overall dimensions refer to valves **DC** voltage, with connectors type 666

Pressure relief valves type AGAM

two stage, subplate mounting - ISO 6264 size 10, 20 and 32

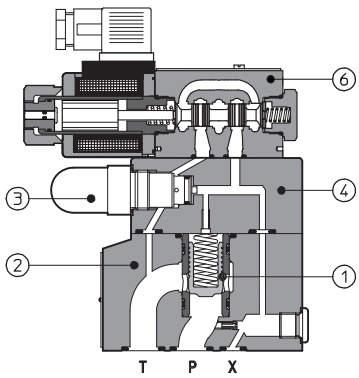

AGAM-10/11...-E

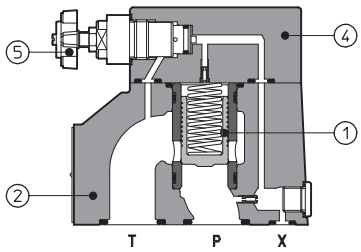

AGAM-20/..../V

AGAM are two stage pressure relief valves with balanced poppet, designed to operate in oil hydraulic systems.

In standard versions the piloting pressure of the poppet ① of the main stage ② is regulated by means of a grub screw protected by cap ③ in the cover ④.

Optional versions with setting adjustment by handwheel ⑤ instead of the grub screw are available on request.

Clockwise rotation increases the pressure.

AGAM can be equipped with a pilot solenoid valve ⑥ for venting or for different pressure setting type:

- DHE for AC and DC supply, high performances with **cURus** certified solenoids
- DHL for AC and DC supply, compact execution

Mounting surface: **ISO 6264 size 10, 20** and **32**
Max flow: **200, 400** and **600 l/min**
Max pressure up to **350 bar**

1 MODEL CODE

AGAM	-	20	/	20	/	210	/	100/100	/	V	-	E	X	24DC	**	/	*

AGAM = pressure relief valve subplate mounting

Size:
10 20 32

Setting pressure and venting option:
- = one setting pressure without option
10 = one setting pressure with venting, with de-energized solenoid
11 = one setting pressure with venting, with energized solenoid
20 = two setting pressure with venting, with de-energized solenoid
21 = two setting pressure with venting, with energized solenoid
22 = two setting pressure without venting
32 = three setting pressure without venting

Setting: see section 3 for available setting **(1)**

Pressure range of second/third setting **(1)**:
50 = 4÷50 bar **100** = 6÷100 bar
210 = 7÷210 bar **350** = 8÷350 bar

Options, see section 7
E V WP Y

Pilot valve **(1)**:
E = DHE for AC and DC supply, high performances with **cURus** certified solenoids
L = DHL for AC and DC supply, compact execution

X = without connector **(1):**
See section 10 for available connectors, to be ordered separately
-00-AC = AC solenoid valve without coils
-00-DC = DC solenoid valve without coils

Voltage code, see section 6 **(1)**:

Series number

Seals material, see section 11:
- = NBR
PE = FKM
BT = HNBR **(2)**

For **PED** version see technical table CY066

(1) Only for AGAM with solenoid valve for venting and/or for the selection of the setting pressure
(2) Not available for -L version (DHL pilot valve)

2 HYDRAULIC SYMBOLS

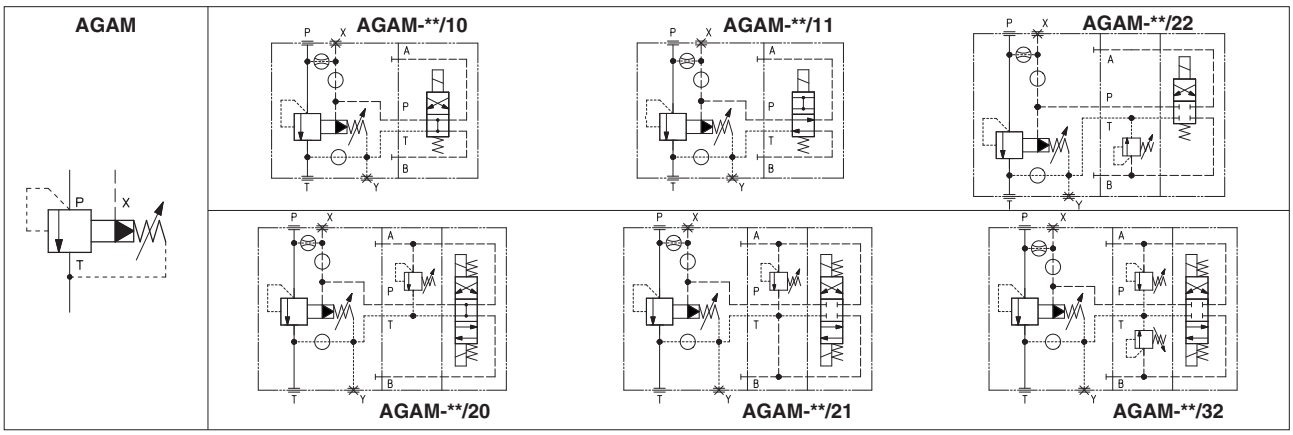

3 GENERAL CHARACTERISTICS

Assembly position	Any position
Subplate surface finishing to ISO 4401	Acceptable roughness index, Ra ≤0,8 recommended Ra 0,4 - flatness ratio 0,01/100
MTTFd valves according to EN ISO 13849	75 years for standard version, 75 years for venting option, see technical table P007
Ambient temperature range	**Standard** = -30°C ÷ +70°C **/PE** option = -20°C ÷ +70°C **/BT** option = -40°C ÷ +70°C
Storage temperature range	**Standard** = -30°C ÷ +80°C **/PE** option = -20°C ÷ +80°C **/BT** option = -40°C ÷ +80°C
Surface protection	Body: zinc coating with black passivation Coil: zinc nickel coating (DC version) plastic incapsulation (AC version)
Corrosion resistance	Salt spray test (EN ISO 9227) > 200 h
Compliance	CE to Low Voltage Directive 2014/35/EU RoHS Directive 2011/65/EU as last update by 2015/863/EU REACH Regulation (EC) n°1907/2006

4 HYDRAULIC CHARACTERISTICS

Valve model	**AGAM-10**	**AGAM-20**	**AGAM-32**
Setting [bar]	50; 100; 210; 350		
Pressure range [bar]	4÷50; 6÷100; 7÷210; 8÷350		
Max pressure [bar]	Ports P, X = 350 Ports T, Y = 210 (without pilot solenoid valve) For version with pilot solenoid valve, see technical tables E015 and E018		
Max flow [l/min]	200	400	600

5 ELECTRICAL CHARACTERISTICS (for AGAM with pilot solenoid valve)

Insulation class	**H** (180°C) for DC coils; **F** (155°C) for AC coils Due to the occuring surface temperatures of the solenoid coils, the European standards EN ISO 13732-1 and EN ISO 4413 must be taken into account
Protection degree to DIN EN 60529	**IP 65** (with connectors correctly assembled)
Relative duty factor	100%
Supply voltage and frequency	See section 6
Supply voltage tolerance	± 10%
Certification	**cURus** North American standard - only for DHE pilot valve

6 COIL VOLTAGE

External supply nominal voltage ± 10%	**Voltage code**	Type of connector	-EX Power consumption (2)	-LX Power consumption (2)	Code of spare coil -EX	Code of spare coil -LX
12 DC	**12 DC**	666 or 667	30W	29W	COE-12DC	COL-12DC
14 DC	**14 DC**				COE-14DC	COL-14DC
110 DC	**110 DC**				COE-110DC	COL-110DC
220 DC	**220 DC**				COE-220DC	COL-220DC
110/50 AC (1)	**110/50/60 AC**	666 or 667	58VA (3)	58VA (3)	COE-110/50/60AC	COL-110/50/60AC
115/60 AC	**115/60 AC**		80VA (3)		COE-115/60AC	COL-115/60AC
230/50 AC (1)	**230/50/60 AC**		58VA (3		COE-230/50/60AC	COL-230/50/60AC
230/60 AC	**230/60 AC**		80VA (3)		COE-230/60AC	COL-230/60AC

(1) For other supply voltages available on request see technical tables E015, E018.
(2) Coil can be supplied also with 60 Hz of voltage frequency: in this case the performances are reduced by 10 ÷ 15% and the power consumption is 55 VA (DHL) and 58 VA (DHE)
(3) Average values based on tests performed at nominal hydraulic condition and ambient/coil temperature of 20°C.
(4) When solenoid is energized, the inrush current is approx 3 times the holding current.

7 OPTIONS

/E = external pilot
/V = regulating handwheel instead of grub screw protected by cap (for handwheel features, see table K150)
/WP = prolunged manual override protected by rubber cap (only for AGAM with pilot solenoid valve)
/Y = external drain (only for AGAM with pilot solenoid valve)

8 REGULATED PRESSURE VERSUS FLOW DIAGRAMS based on mineral oil ISO VG 46 at 50°C

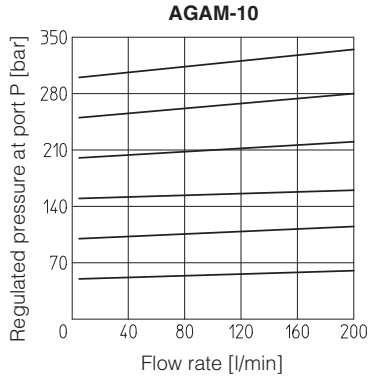

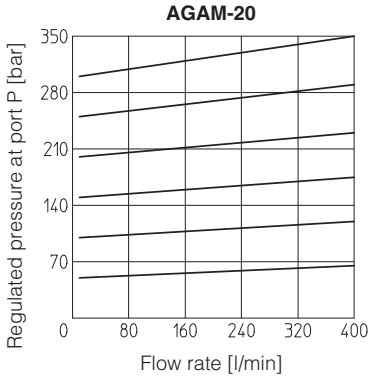

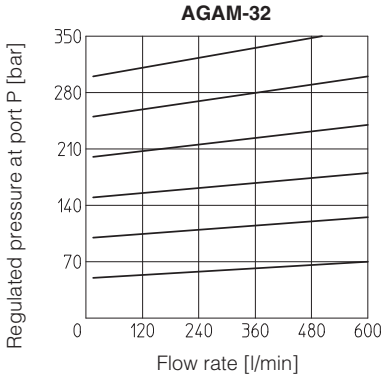

9 MINIMUM PRESSURE VERSUS FLOW DIAGRAMS based on mineral oil ISO VG 46 at 50°C

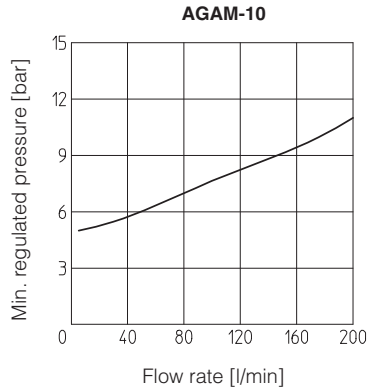

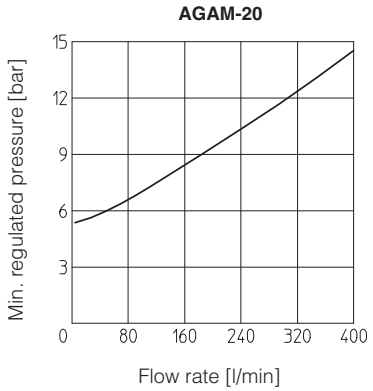

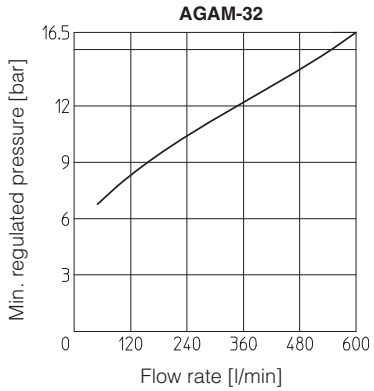

10 ELECTRIC CONNECTORS ACCORDING TO DIN 43650 for AGAM with solenoid valve (to be ordered separately, see tech table K800)

666 = standard connector IP-65, suitable for direct connection to electric supply source
667 = as 666, but with built-in signal led. Available for power supply voltage 24 AC or DC, 110 AC or DC, 220 AC or DC

11 SEALS AND HYDRAULIC FLUID - for other fluids not included in below table, consult our technical office

Seals, reccomended fluid temperature	NBR seals (standard) = -20°C ÷ +80°C, with HFC hydraulic fluids = -20°C ÷ +50°C FKM seals (/PE option) = -20°C ÷ +80°C HNBR seals (/BT option) = -40°C ÷ +60°C, with HFC hydraulic fluids = -40°C ÷ +50°C		
Recommended viscosity	15÷100 mm²/s - max allowed range 2,8 ÷ 500 mm²/s		
Max fluid contamination level	ISO4406 class 20/18/15 NAS1638 class 9, see also filter section at www.atos.com or KTF catalog		
Hydraulic fluid	**Suitable seals type**	**Classification**	**Ref. Standard**
Mineral oils	NBR, FKM, HNBR	HL, HLP, HLPD, HVLP, HVLPD	DIN 51524
Flame resistant without water	FKM	HFDU, HFDR	ISO 12922
Flame resistant with water	NBR, HNBR	HFC	

12 DIMENSIONS [mm]

AGAM-10

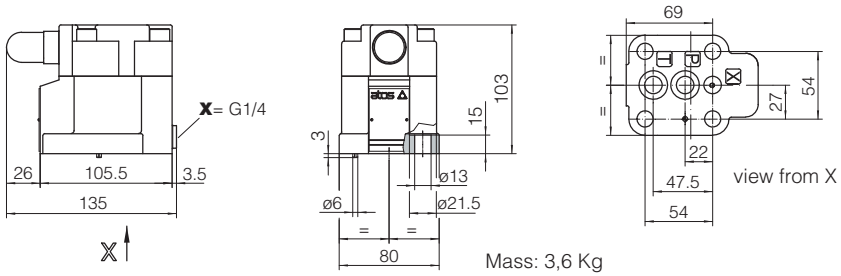

Mass: 3,6 Kg

ISO 6264: 2007
Mounting surface: 6264-06-09-1-97
Fastening bolts:
4 socket head screws
M12x35 class 12.9
Tightening torque = 125 Nm
Seals: 2 OR 123; 1 OR 109/70
Ports P, T: Ø = 14,5 mm
Ports X: Ø = 3,2 mm

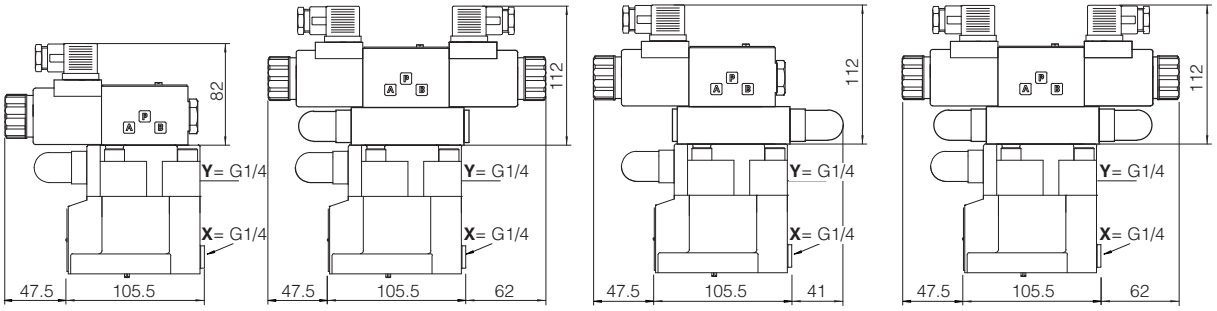

AGAM-10/10/-EX**
AGAM-10/11/-EX**
Mass: 5,1 Kg

AGAM-10/20/-EX**
AGAM-10/21/-EX**
Mass: 6,2 Kg

AGAM-10/22/-EX**
Mass: 5,9 Kg

AGAM-10/32/-EX**
Mass: 6,3 Kg

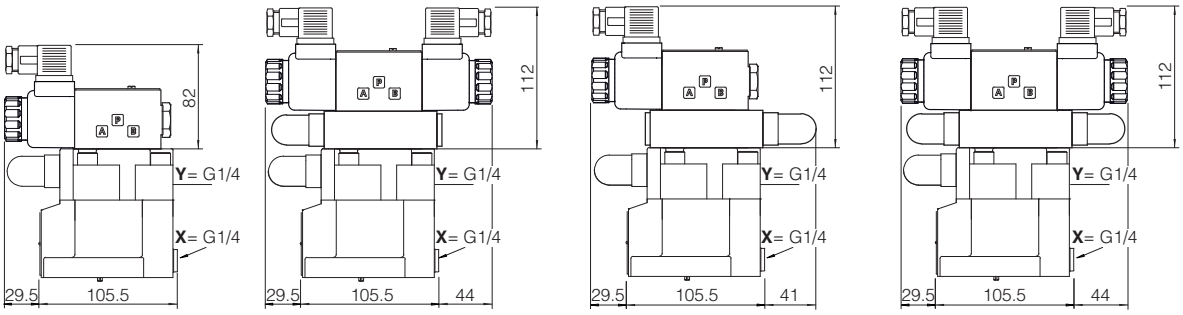

AGAM-10/10/-LX**
AGAM-10/11/-LX**
Mass: 4,8 Kg

AGAM-10/20/-LX**
AGAM-10/21/-LX**
Mass: 5,6 Kg

AGAM-10/22/-LX**
Mass: 5,6 Kg

AGAM-10/32/-LX**
Mass: 5,7 Kg

Overall dimensions refer to valves **DC** voltage, with connectors type 666

AGAM-20

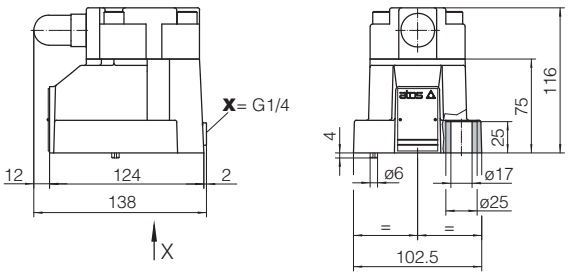

Mass: 4,8Kg

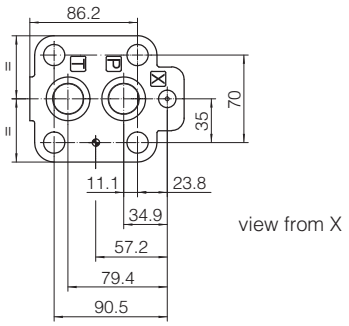

ISO 6264: 2007
Mounting surface: 6264-08-11-1-97
Fastening bolts:
4 socket head screws M16x50 class 12.9
Tightening torque = 300 Nm
Seals: 2 OR 4112; 1 OR 109/70
Ports P, T: Ø = 24 mm
Ports X: Ø = 3,2 mm

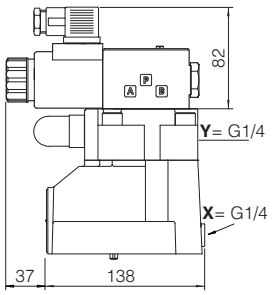

AGAM-20/10/-EX**
AGAM-20/11/-EX**

Mass: 6,3 Kg

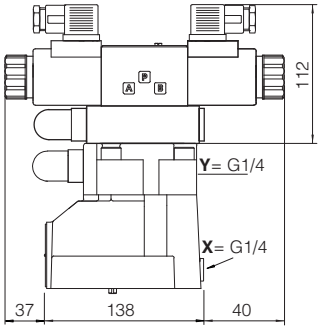

AGAM-20/20/-EX**
AGAM-20/21/-EX**

Mass: 7,4 Kg

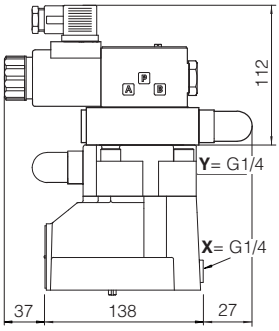

AGAM-20/22/-EX**

Mass: 7,1 Kg

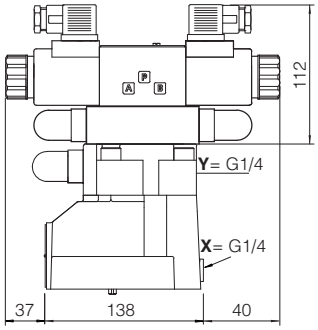

AGAM-20/32/-EX**

Mass: 7,5 Kg

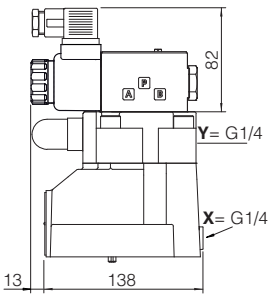

AGAM-20/10/-LX**
AGAM-20/11/-LX**

Mass: 6 Kg

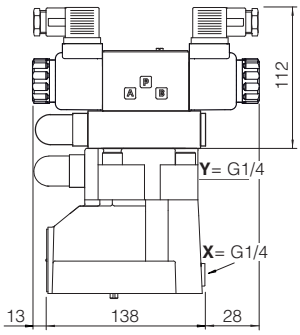

AGAM-20/20/-LX**
AGAM-20/21/-LX**

Mass: 6,8Kg

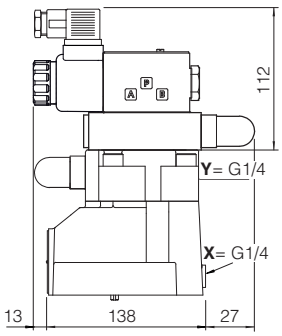

AGAM-20/22/-LX**

Mass: 6,8 Kg

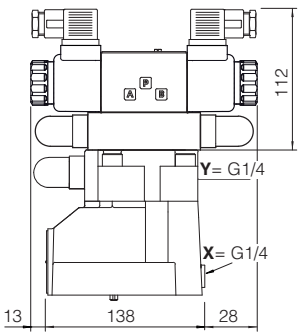

AGAM-20/32/-LX**

Mass: 7 Kg

Overall dimensions refer to valves **DC** voltage, with connectors type 666

AGAM-32

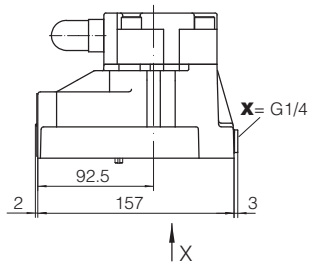

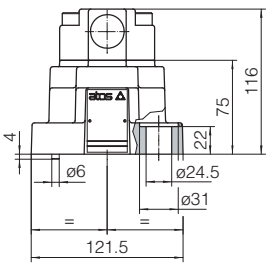

Mass: 6,2 Kg

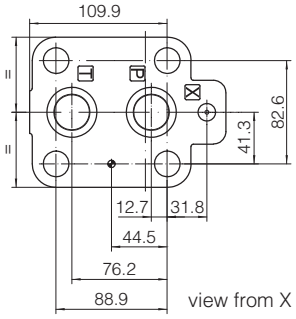

view from X

ISO 6264: 2007
Mounting surface: 6264-10-17-1-97 (with M20 fixing holes instead of standard M18)
Fastening bolts:
4 socket head screws
M20x60 class 12.9
Tightening torque = 600 Nm
Seals: 2 OR 4131; 1 OR 109/70
Ports P, T: Ø = 28,5 mm
Ports X: Ø = 3,2 mm

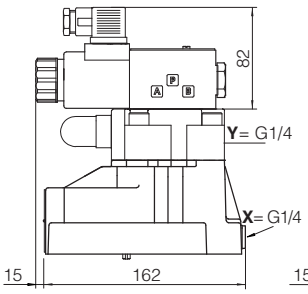

AGAM-32/10/-EX**
AGAM-32/11/-EX**
Mass: 7,7 Kg

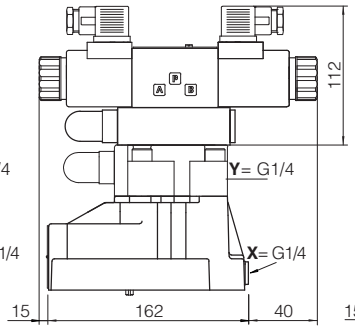

AGAM-32/20/-EX**
AGAM-32/21/-EX**
Mass: 8,8 Kg

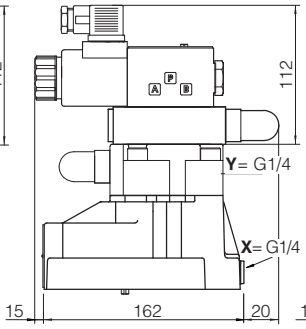

AGAM-32/22/-EX**
Mass: 8,5 Kg

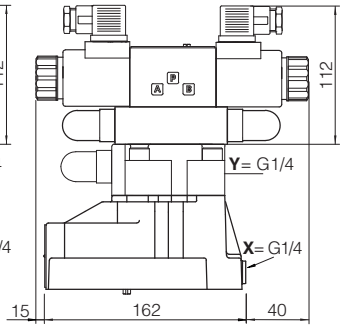

AGAM-32/32/-EX**
Mass: 8,9 Kg

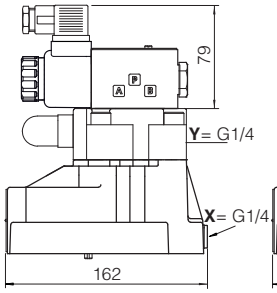

AGAM-32/10/-LX**
AGAM-32/11/-LX**
Mass: 7,4 Kg

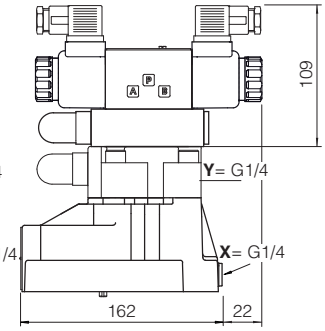

AGAM-32/20/-LX**
AGAM-32/21/-LX**
Mass: 8,2 Kg

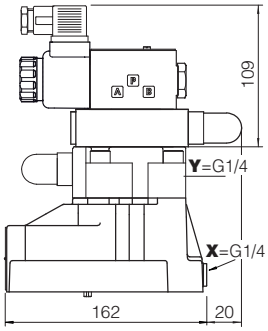

AGAM-32/22/-LX**
Mass: 8,2 Kg

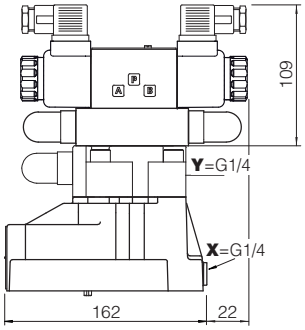

AGAM-32/32/-LX**
Mass: 8,4 Kg

Overall dimensions refer to valves **DC** voltage, with connectors type 666

13 MOUNTING SUBPLATES

Valve	Subplate model	Port location	Ports			Ø Counterbore [mm]			Mass [Kg]
			P	T	X	P	T	X	
AGAM-10	BA-306	Ports P, T, X underneath;	G 1/2"	G 3/4"	G 1/4"	30	36,5	21,5	1,5
AGAM-20	BA-406		G 3/4"	G 3/4"	G 1/4"	36,5	36,5	21,5	3,5
	BA-506		G 1"	G 1"	G 1/4"	46	46	21,5	3,5
AGAM-32	BA-706		G 1 1/2"	G 1 1/2"	G 1/4"	63,5	63,5	21,5	6

The subplates are supplied with fastening bolts. For further details see table K280

Pressure relief valves type REM

two stage, flange mounting SAE 3/4”, 1”, 1¹/₄”

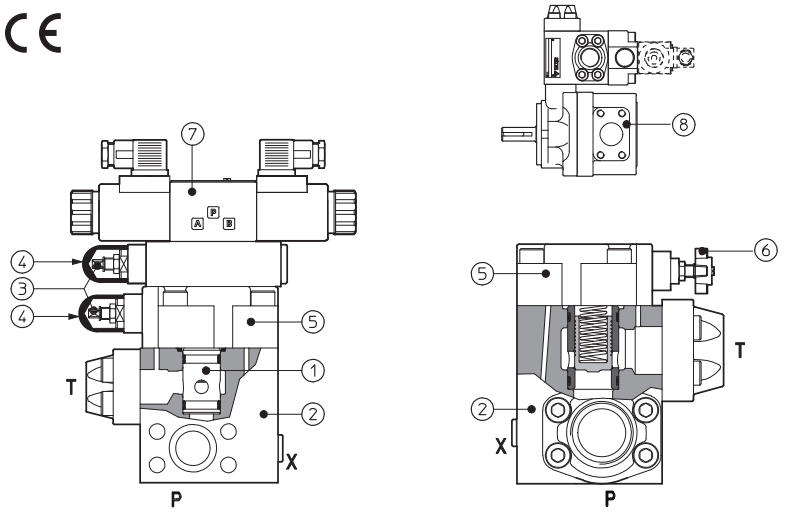

REM-3/20...-E **REM-4/210/V**

REM are two stage pressure relief valves with balanced poppet and SAE flange connection, designed to operate in oil hydraulic systems.

They can be directly mounted with SAE flange attachments on the pumps outlet ports ⑧ and, in particular, on the PFE pumps (see tab. A005, A007).

In standard versions the piloting pressure of the poppet ① of the main stage ② is regulated by means of a grub screw ③ protected by cap ④ in the cover ⑤.

Optional versions with setting adjustment by handwheel ⑥ instead of the grub screw are available on request.

Clockwise rotation increases the pressure.

REM can be equipped with a venting solenoid valve ⑦ type:

- DHE for AC and DC supply, high performances, with **cURus** certified solenoids
- DHL for AC and DC supply, compact execution

Mounting surface:
SAE flange connection: **3/4", 1", 1¹/₄"**
Max flow: **200, 400** and **600 l/min** respectively
Pressure up to **350 bar**

1 MODEL CODE

REM	-	4	/	20	210	/	100/100	/	V	-	E	X	24DC	**	/	*

REM = pressure relief valve SAE flange mounting

Size:
3 = SAE 3/4"
4 = SAE 1"
5 = SAE 1¹/₄"

Setting pressure and venting option (1):
- = one setting pressure without option
10 = one setting pressure with venting, with de-energized solenoid
11 = one setting pressure with venting, with energized solenoid
20 = two setting pressure with venting, with de-energized solenoid
21 = two setting pressure with venting, with energized solenoid
22 = two setting pressure without venting
32 = three setting pressure without venting

Pressure range:
50 = 4÷50 bar;
100 = 6÷100 bar;
210 = 7÷210 bar;
350 = 8÷350 bar (only for REM-3)

Pressure range of second/third setting **(1)**:
50 = 4÷50 bar;
100 = 6÷100 bar;
210 = 7÷210 bar;
350 = 8÷350 bar (only for REM-3)

Pilot valve **(1)**:
E = DHE for AC and DC supply, high performances with **cURus** certified solenoids
L = DHL for AC and DC supply, compact execution

X = without connector **(1):**
See section 10 for available connectors, to be ordered separately
-00-AC = AC solenoid valve without coils
-00-DC = DC solenoid valve without coils

Voltage code, see section 7

Series number

Seals material, see section 7:
- = NBR
PE = FKM
BT = HNBR

Options **(2)**:
WP = prolonged manual override protected by rubber cap (1)
V = regulating by handwheel instead of a grub screw protected by cap

(1) Only for REM with solenoid valve for venting and/or for the selection of the setting pressure
(2) For handwheel features, see technical table K150

2 HYDRAULIC CHARACTERISTICS

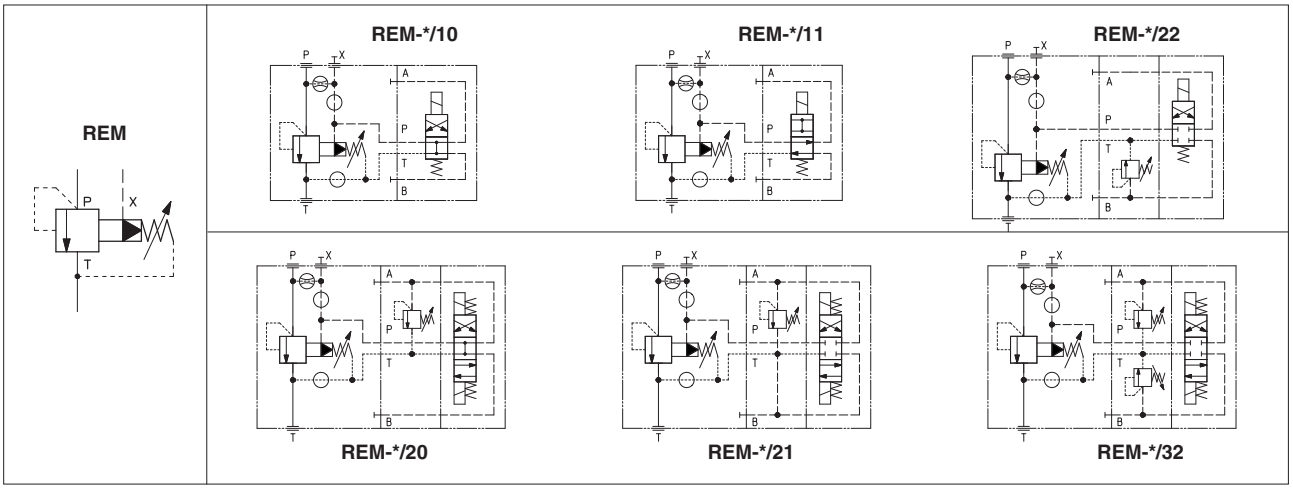

3 GENERAL CHARACTERISTICS

Assembly position	Any position
Subplate surface finishing to ISO 4401	Acceptable roughness index, Ra ≤0,8 recommended Ra 0,4 - flatness ratio 0,01/100
MTTFd valves according to EN ISO 13849	75 years, see technical table P007
Ambient temperature range	**Standard** = -30°C ÷ +70°C **/PE** option = -20°C ÷ +70°C **/BT** option = -40°C ÷ +70°C
Storage temperature range	**Standard** = -30°C ÷ +80°C **/PE** option = -20°C ÷ +80°C **/BT** option = -40°C ÷ +80°C
Surface protection	Body: zinc coating with black passivation Coil: zinc nickel coating (DC version) plastic incapsulation (AC version)
Corrosion resistance	Salt spray test (EN ISO 9227) > 200 h
Compliance	CE to Low Voltage Directive 2014/35/EU RoHS Directive 2011/65/EU as last update by 2015/863/EU REACH Regulation (EC) n°1907/2006

4 HYDRAULIC CHARACTERISTICS

Valve model	**REM-3**	**REM-4**	**REM-5**
Max flow [l/min]	200	400	600
Pressure range [bar]	4-50; 6-100; 7-210; 8-350	4÷50; 6÷100; 7÷210	
Max pressure [bar]	Ports P, X= 350 Port T= 210 without pilot solenoid valve, for version -EX and -LX, see tech tables E015 and E018		

5 ELECTRICAL CHARACTERISTICS (for ARAM with pilot solenoid valve)

Insulation class	**H** (180°C) for DC coils; **F** (155°C) for AC coils Due to the occuring surface temperatures of the solenoid coils, the European standards EN ISO 13732-1 and EN ISO 4413 must be taken into account
Protection degree to DIN EN 60529	**IP 65** (with connectors correctly assembled)
Relative duty factor	100%
Supply voltage and frequency	See section 7
Supply voltage tolerance	± 10%
Certification	**cURus** North American standard - only for DHE pilot valve

6 SEALS AND HYDRAULIC FLUID - for other fluids not included in below table, consult our technical office

Seals, reccomended fluid temperature	NBR seals (standard) = -20°C ÷ +80°C, with HFC hydraulic fluids = -20°C ÷ +50°C FKM seals (/PE option) = -20°C ÷ +80°C HNBR seals (/BT option) = -40°C ÷ +60°C, with HFC hydraulic fluids = -40°C ÷ +50°C		
Recommended viscosity	15÷100 mm²/s - max allowed range 2,8 ÷ 500 mm²/s		
Max fluid contamination level	ISO4406 class 20/18/15 NAS1638 class 9, see also filter section at www.atos.com or KTF catalog		
Hydraulic fluid	**Suitable seals type**	**Classification**	**Ref. Standard**
Mineral oils	NBR, FKM, HNBR	HL, HLP, HLPD, HVLP, HVLPD	DIN 51524
Flame resistant without water	FKM	HFDU, HFDR	ISO 12922
Flame resistant with water	NBR, HNBR	HFC	

7 COIL VOLTAGE

External supply nominal voltage ± 10%	**Voltage code**	Type of connector	-EX Power consumption (2)	-LX Power consumption (2)	Code of spare coil -EX	Code of spare coil -LX
12 DC	**12 DC**	666 or 667	30W	29W	COE-12DC	COL-12DC
14 DC	**14 DC**				COE-14DC	COL-14DC
110 DC	**110 DC**				COE-110DC	COL-110DC
220 DC	**220 DC**				COE-220DC	COL-220DC
110/50 AC (1)	**110/50/60 AC**	666 or 667	58VA (3)	58VA (3)	COE-110/50/60AC	COL-110/50/60AC
115/60 AC	**115/60 AC**		80VA (3)		COE-115/60AC	COL-115/60AC
230/50 AC (1)	**230/50/60 AC**		58VA (3		COE-230/50/60AC	COL-230/50/60AC
230/60 AC	**230/60 AC**		80VA (3)		COE-230/60AC	COL-230/60AC

(1) For other supply voltages available on request see technical tables E015, E018.
(2) Coil can be supplied also with 60 Hz of voltage frequency: in this case the performances are reduced by 10 ÷ 15% and the power consumption is 55 VA (DHL) and 58 VA (DHE)
(3) Average values based on tests performed at nominal hydraulic condition and ambient/coil temperature of 20°C.
(4) When solenoid is energized, the inrush current is approx 3 times the holding current.

8 REGULATED PRESSURE VERSUS FLOW DIAGRAMS based on fluid viscosity of 25 mm²/s at 40°

REM-3

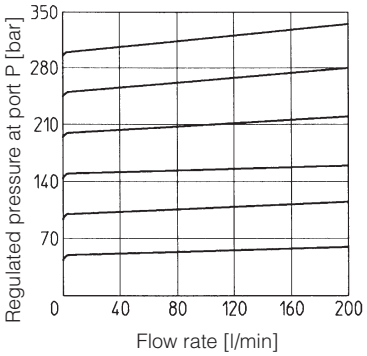

REM-4

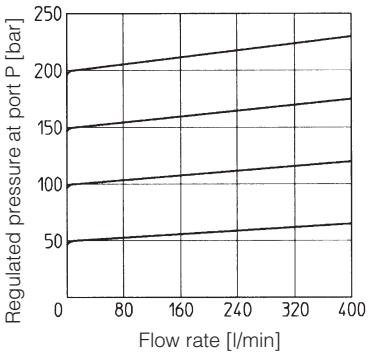

REM-5

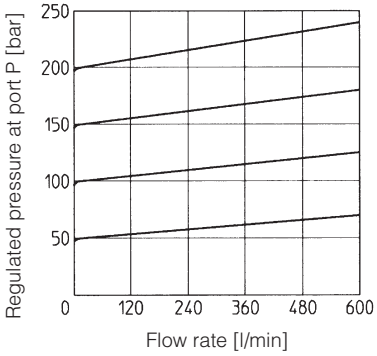

9 MINIMUM PRESSURE VERSUS FLOW DIAGRAMS based on fluid viscosity of 25 mm²/s at 40° C

REM-3

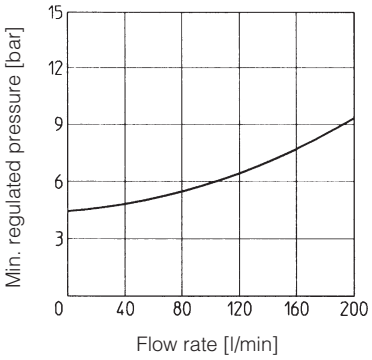

REM-4

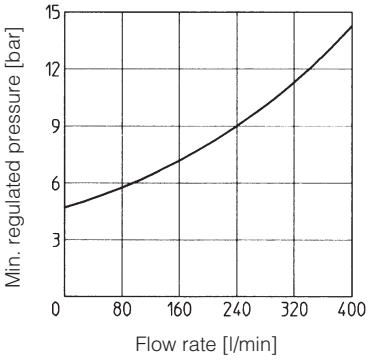

REM-5

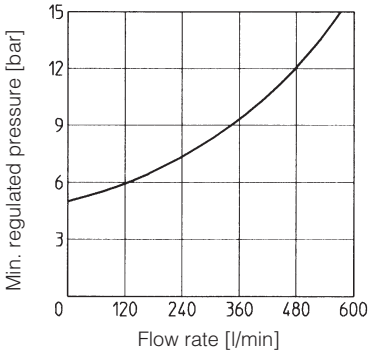

10 ELECTRIC CONNECTORS ACCORDING TO DIN 43650 for REM with solenoid valve (to be ordered separately, see tech table K800)

666 = standard connector IP-65, suitable for direct connection to electric supply source
667 = as 666, but with built-in signal led. Available for power supply voltage 24 AC or DC, 110 AC or DC, 220 AC or DC

REM-3-*-EX

REM-3/10/-EX**
REM-3/11/-EX**

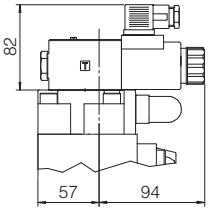

Mass: 8,1 Kg

REM-3/20/-EX**
REM-3/21/-EX**

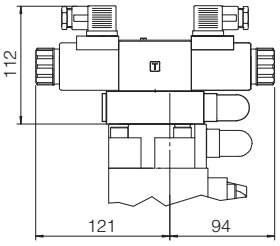

Mass: 9,2 Kg

Flange type WFD-20

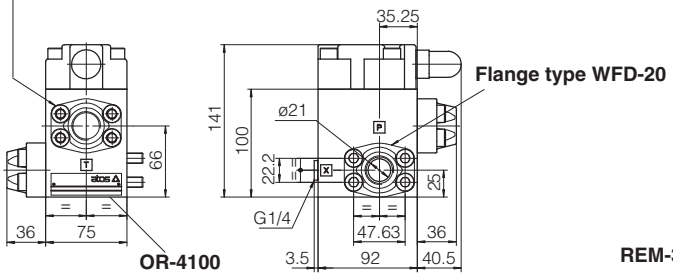

Mass: 6,6 Kg

REM-3/22/-EX**

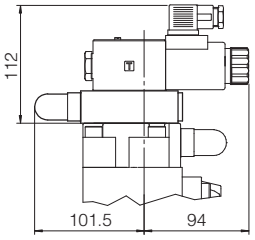

Mass: 8,9 Kg

REM-3/32/-EX**

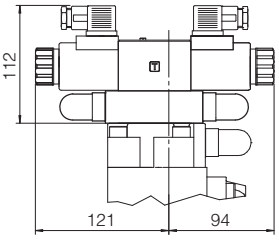

Mass: 9,3 Kg

REM-3-*-LX

REM-3/10/-LX**
REM-3/11/-LX**

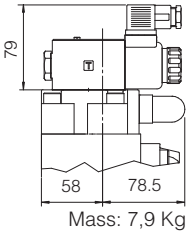

Mass: 7,9 Kg

REM-3/20/-LX**
REM-3/21/-LX**

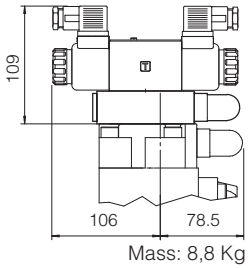

Mass: 8,8 Kg

Flange type WFD-20

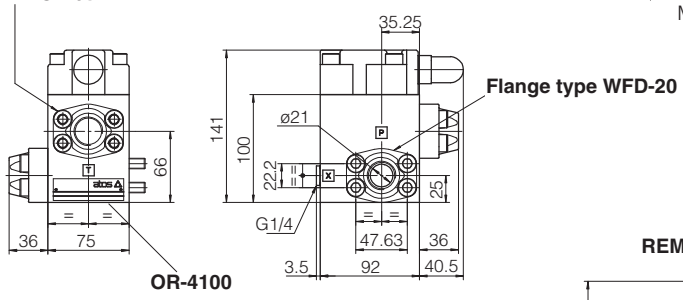

Mass: 6,6 Kg

REM-3/22/-LX**

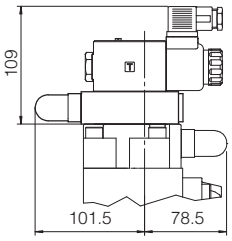

Mass: 8,7 Kg

REM-3/32/-LX**

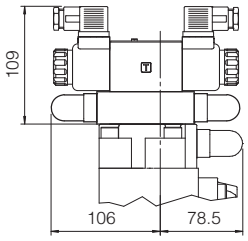

Mass: 8,9 Kg

Overall dimensions refer to valves **DC** voltage, with connectors type 666

REM-4-*-EX

REM-4/10/-EX**
REM-4/11/-EX**

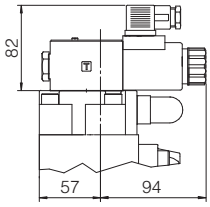

Mass: 8,3 Kg

REM-4/20/-EX**
REM-4/21/-EX**

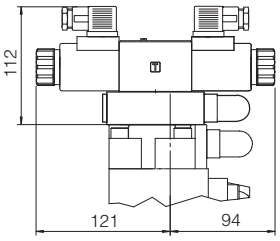

Mass: 9,4 Kg

Flange type WFD-25

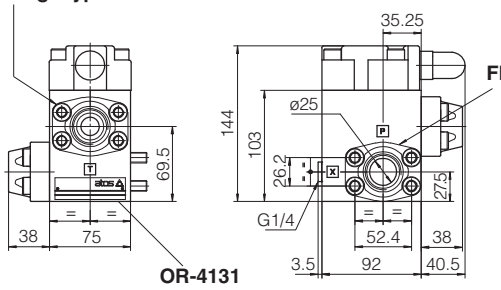

Mass: 6,8 Kg

REM-4/22/-EX**

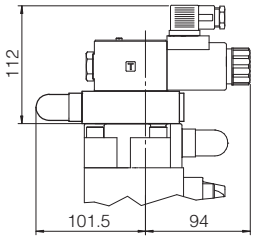

Mass: 9,1 Kg

REM-4/32/-EX**

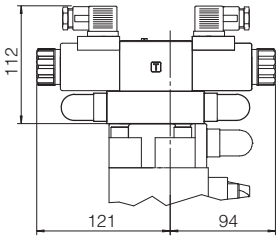

Mass: 9,5 Kg

REM-4-*-LX

REM-4/10/-LX**
REM-4/11/-LX**

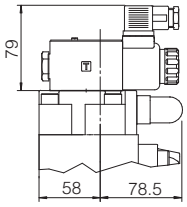

Mass: 8,1 Kg

REM-4/20/-LX**
REM-4/21/-LX**

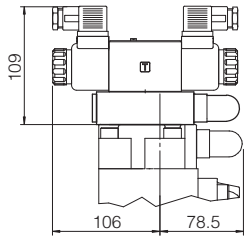

Mass: 9 Kg

Flange type WFD-25

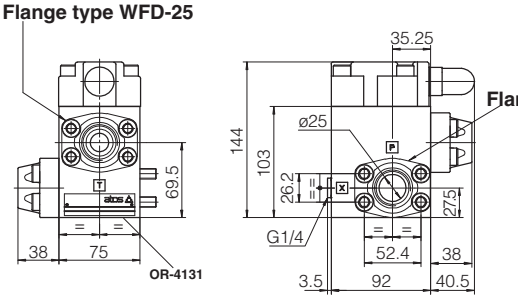

Mass: 6,8 Kg

REM-4/22/-LX**

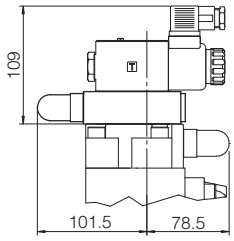

Mass: 8,9 Kg

REM-4/32/-LX**

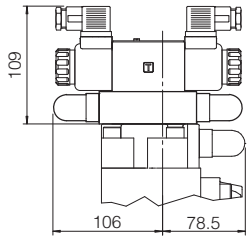

Mass: 9,1 Kg

Overall dimensions refer to valves **DC** voltage, with connectors type 666

REM-5-*-EX

REM-5/10/-EX**
REM-5/11/-EX**

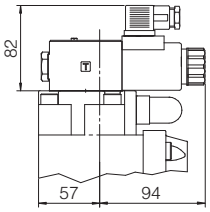

Mass: 9,7 Kg

REM-5/20/-EX**
REM-5/21/-EX

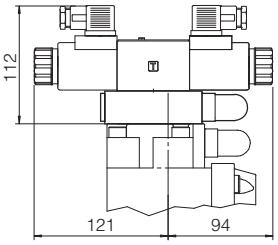

Mass: 10,8 Kg

Flange type WFD-32

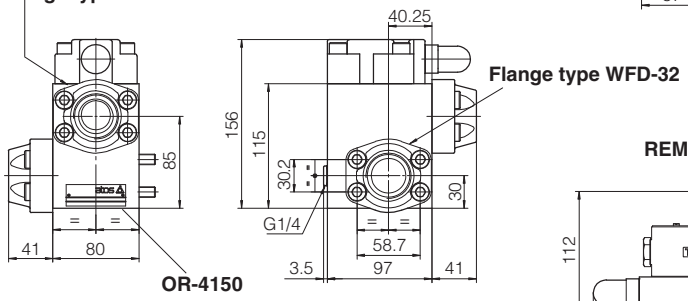

Mass: 8,2 Kg

REM-5/22/-EX**

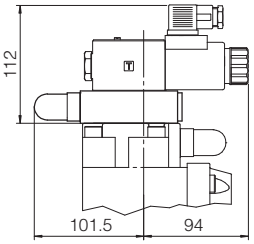

Mass: 10,5 Kg

REM-5/32/-EX**

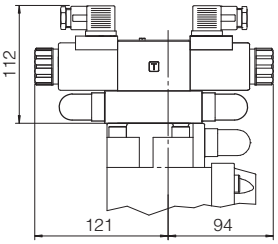

Mass: 10,9 Kg

REM-5-*-LX

REM-5/10/-LX**
REM-5/11/-LX**

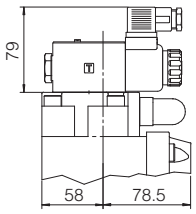

Mass: 9,5 Kg

REM-5/20/-LX**
REM-5/21/-LX**

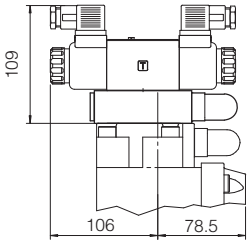

Mass: 10,4 Kg

Flange type WFD-32

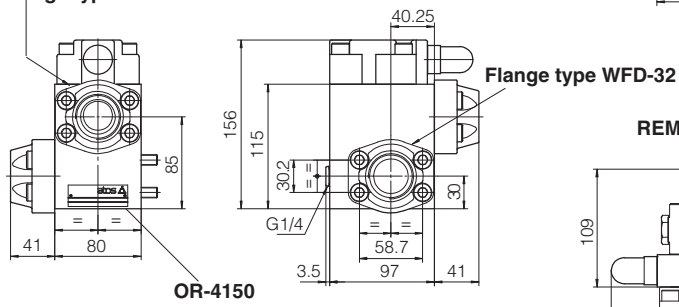

Mass: 8,2 Kg

REM-5/22/-LX**

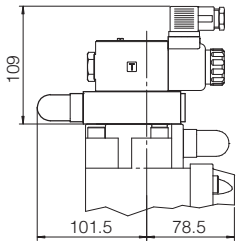

Mass: 10 Kg

REM-5/32/-LX**

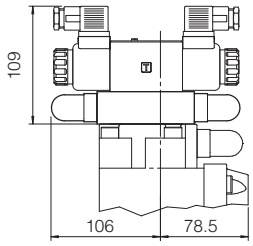

Mass: 10,5 Kg

Overall dimensions refer to valves **DC** voltage, with connectors type 666

12 ASSEMBLY EXAMPLE OF A REM VALVE ON A PFE PUMP

LATERAL VIEW OF PUMP

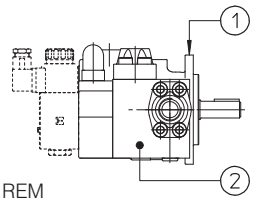

REAR VIEW OF PUMP

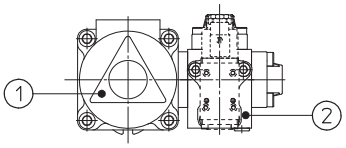

TOP VIEW OF PUMP

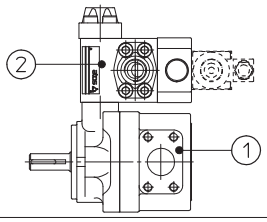

① Pump type PFE
② Relief valve type REM

Pressure control valves type AGIR, AGIS, AGIU

two stage, subplate mounting, ISO 5781 sizes 10, 20 and 32

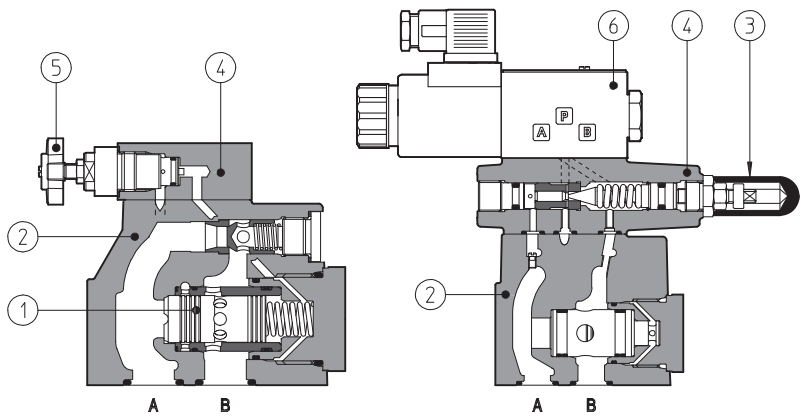

AGIRR-20/*/V** **AGIU-10/11...-E**

Two stage pressure control valves with balanced poppet designed to operate in oil hydraulic systems.
AGIR: pressure reducing;
AGIS: sequence;
AGIU: unloading.
In standard versions the piloting pressure of the poppet ① of the main stage ② is regulated by means of a grub screw protected by cap ③ in the cover ④.
Optional versions with setting adjustment by handwheel ⑤ instead of the grub screw are available on request.
Clockwise rotation increases pressure.
Unloading valves AGIU can be equipped with a venting solenoid valve ⑥ type:

- DHE for AC and DC supply, high performances with **cURus** certified solenoids
- DHL for AC and DC supply, compact execution

Mounting surface: **ISO 5781 size 10, 20 and 32**
Max flow:
AGIR = 160, 300, 400 l/min
AGIS = 200, 400, 600 l/min
AGIU = 100, 200, 300 l/min
Pressure up to **350 bar**

1 MODEL CODE

AGIU	*	-	20	/	10	/	210	/	V	-	E	X	24DC	**	/	*

Pressure control valves subplate mounting
AGIR = pressure reducing
AGIS = sequence
AGIU = unloading

Only for AGIR and AGIS:
R = with check valve
- = without check valve

Size: **10** **20** **32**

Optional solenoid valve for venting **(1)**
10 = venting with de-energized solenoid
11 = venting with energized solenoid

Pressure range:
50 = 4÷50 bar (AGIR*); **100** = 6÷100 bar;
210 = 7÷210 bar; **350** = 8÷350 bar

Options **(2)**:
V = regulating handwheel instead of a grub screw protected by cap
VF = regulating knob instead of a grub screw protected by cap (only for AGIS, AGIU)
VS = manual override with safety locking instead of a grub screw protected by cap (only for AGIS, AGIU)

Only for AGIU:
D = internal drain
WP = prolonged manual override protected by rubber cap **(2)**
- = standard unloading characteristics
5, 6, 7 = other unloading characteristics, see section 8

X = without connector **(1):**
See section 9 for available connectors, to be ordered separately
-00-AC = AC solenoid valve without coils
-00-DC = DC solenoid valve without coils

Pilot valve **(1)**:
E = DHE for AC and DC supply, high performances with **cURus** certified solenoids
L = DHL for AC and DC supply, compact execution

Voltage code, see section 10 **(1)**

Series number

Seals material, see section 6:
- = NBR
PE = FKM
BT = HNBR **(3)**

(1) Only for AGIU with solenoid valve for venting
(2) For handwheel features, see technical table K150
(3) Not available for -L version (DHL pilot valve)

2 HYDRAULIC CHARACTERISTICS

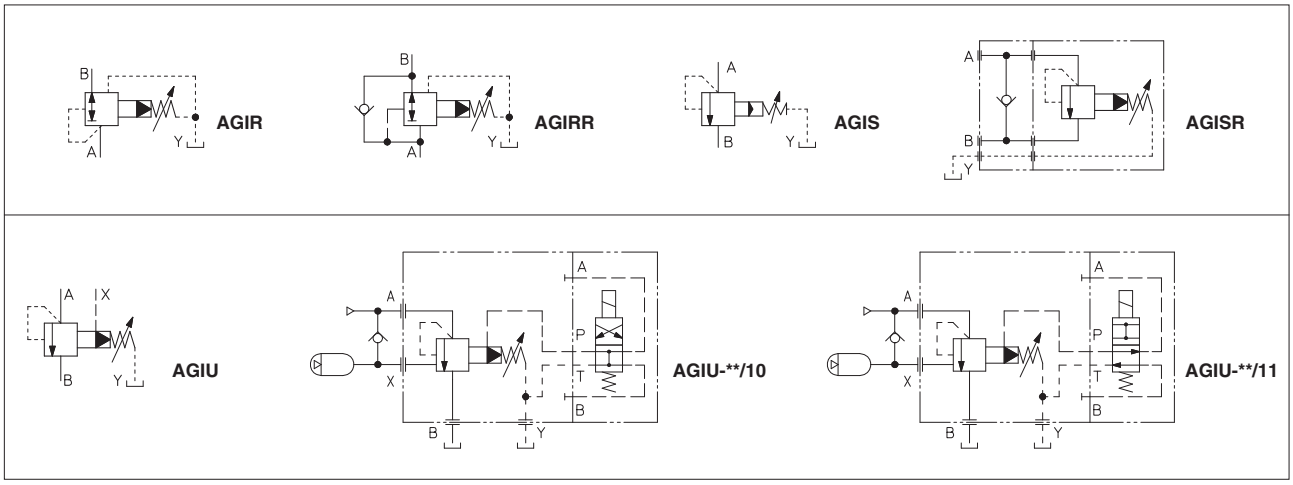

3 GENERAL CHARACTERISTICS

Assembly position	Any position
Subplate surface finishing to ISO 4401	Acceptable roughness index, Ra ≤0,8 recommended Ra 0,4 - flatness ratio 0,01/100
MTTFd valves according to EN ISO 13849	75 years for standard version, 75 years for venting option, see technical table P007
Ambient temperature range	**Standard** = -30°C ÷ +70°C **/PE** option = -20°C ÷ +70°C **/BT** option = -40°C ÷ +70°C
Storage temperature range	**Standard** = -30°C ÷ +80°C **/PE** option = -20°C ÷ +80°C **/BT** option = -40°C ÷ +80°C
Surface protection	Body: zinc coating with black passivation Coil: zinc nickel coating (DC version) plastic incapsulation (AC version)
Corrosion resistance	Salt spray test (EN ISO 9227) > 200 h
Compliance	CE to Low Voltage Directive 2014/35/EU RoHS Directive 2011/65/EU as last update by 2015/863/EU REACH Regulation (EC) n°1907/2006

4 HYDRAULIC CHARACTERISTICS

Valve model	**AGIR-10**	**AGIR-20**	**AGIR-32**	**AGIS-10**	**AGIS-20**	**AGIS-32**	**AGIU-10**	**AGIU-20**	**AGIU-32**
Max flow [l/min]	160	300	400	200	400	600	100	200	300
Pressure range [bar]	4÷50 (AGIR*); 6÷100; 7÷210; 8÷350								
Max pressure [bar]	Ports A, B, X = 350 bar Port Y = 0								

5 ELECTRICAL CHARACTERISTICS (for AGAM with pilot solenoid valve)

Insulation class	**H** (180°C) for DC coils; **F** (155°C) for AC coils Due to the occurring surface temperatures of the solenoid coils, the European standards EN ISO 13732-1 and EN ISO 4413 must be taken into account
Protection degree to DIN EN 60529	**IP 65** (with connectors correctly assembled)
Relative duty factor	100%
Supply voltage and frequency	See section 10
Supply voltage tolerance	± 10%
Certification	**cURus** North American standard - only for DHE pilot valve

6 SEALS AND HYDRAULIC FLUID - for other fluids not included in below table, consult our technical office

Seals, recommended fluid temperature	NBR seals (standard) = -20°C ÷ +80°C, with HFC hydraulic fluids = -20°C ÷ +50°C FKM seals (/PE option) = -20°C ÷ +80°C HNBR seals (/BT option) = -40°C ÷ +60°C, with HFC hydraulic fluids = -40°C ÷ +50°C
Recommended viscosity	15÷100 mm²/s - max allowed range 2,8 ÷ 500 mm²/s
Max fluid contamination level	ISO4406 class 20/18/15 NAS1638 class 9, see also filter section at www.atos.com or KTF catalog

Hydraulic fluid	**Suitable seals type**	**Classification**	**Ref. Standard**
Mineral oils	NBR, FKM, HNBR	HL, HLP, HLPD, HVLP, HVLPD	DIN 51524
Flame resistant without water	FKM	HFDU, HFDR	ISO 12922
Flame resistant with water	NBR, HNBR	HFC	

7 REGULATED PRESSURE VERSUS FLOW DIAGRAMS based on mineral oil ISO VG 46 at 50°C

AGIR-10

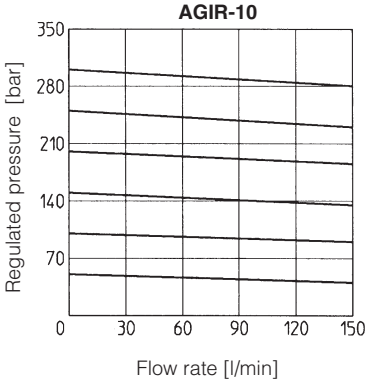

AGIR-20

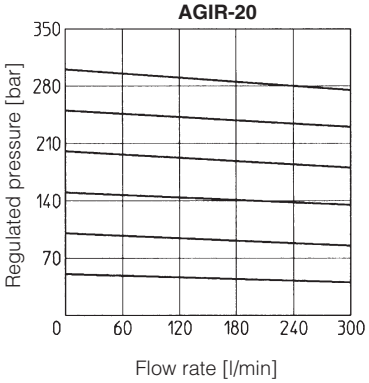

AGIR-32

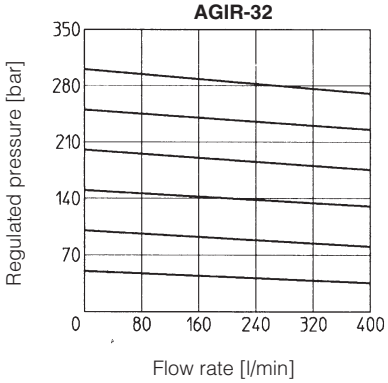

AGIS-10, AGIU-10

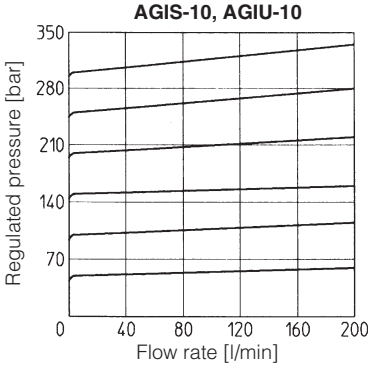

Note: for AGIU-10, the max flow rate is 100 l/min

AGIS-20, AGIU-20

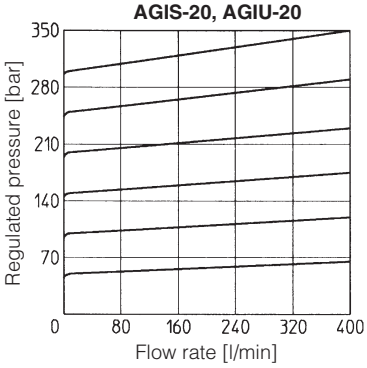

Note: for AGIU-20, the max flow rate is 200 l/min

AGIS-32, AGIU-32

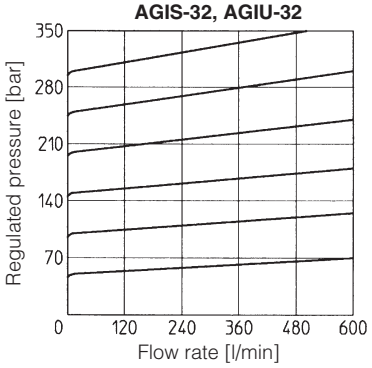

Note: for AGIU-32, the max flow rate is 300 l/min

8 OPERATING DIAGRAM

based on mineral oil ISO VG 46 at 50°C

1 = AGIR-10 A → B
2 = AGIR-20 A → B
3 = AGIR-32 A → B
4 = AGIR-10 B → A
5 = AGIR-20 B → A
6 = AGIR-32 B → A

7 = AGIS-10
8 = AGIS-20
9 = AGIS-32

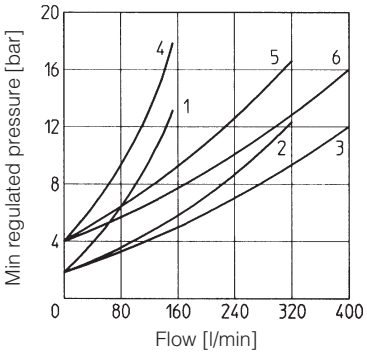

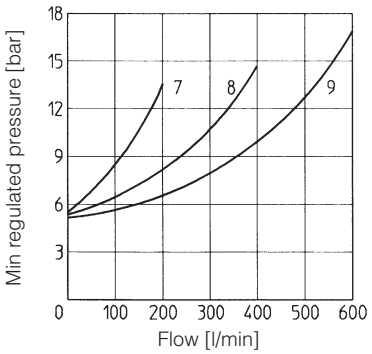

Opening/closing diagram for AGIU

1 = AGIU-**/...(standard) **3** = AGIU-**/.../6
2 = AGIU-**/.../5 **4** = AGIU-**/.../7

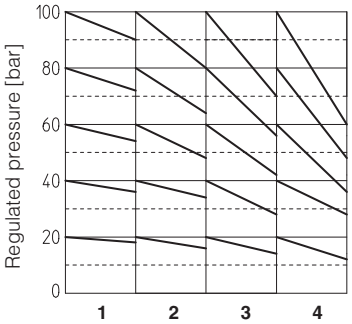

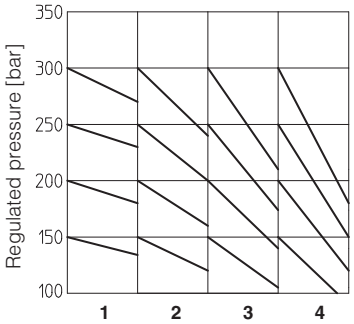

NOTES

1) Short pipes with low resistance must be used between the unloading valve and the accumulator;
2) When the resistance is high, the hydraulic pilot signal must be taken as closed as possible to the accumulator;
3) With high pump flow and small valve differential pressure of intervention it is advisable to use the version with external drain;
4) When to use the BA-*25 subplates:
   a) in applications with working frequencies >10 Hz use subplates type BA-*25/4 (spring with 4 bar of cracking pressure);
   b) in applications with working frequencies <10 Hz use subplates type BA-*25/2 (spring with 2 bar of cracking pressure);

9 ELECTRIC CONNECTORS ACCORDING TO DIN 43650 for AGIU with solenoid valve (to be ordered separately, see tech table K800)

666 = standard connector IP-65, suitable for direct connection to electric supply source
667 = as 666, but with built-in signal led. Available for power supply voltage 24 AC or DC, 110 AC or DC, 220 AC or DC

10 COIL VOLTAGE

External supply nominal voltage ± 10%	**Voltage code**	Type of connector	-EX Power consumption (2)	-LX Power consumption (2)	Code of spare coil -EX	Code of spare coil -LX
12 DC	**12 DC**	666 or 667	30W	29W	COE-12DC	COL-12DC
14 DC	**14 DC**				COE-14DC	COL-14DC
110 DC	**110 DC**				COE-110DC	COL-110DC
220 DC	**220 DC**				COE-220DC	COL-220DC
110/50 AC (1)	**110/50/60 AC**	666 or 667	58VA (3)	58VA (3)	COE-110/50/60AC	COL-110/50/60AC
115/60 AC	**115/60 AC**		80VA (3)		COE-115/60AC	COL-115/60AC
230/50 AC (1)	**230/50/60 AC**		58VA (3		COE-230/50/60AC	COL-230/50/60AC
230/60 AC	**230/60 AC**		80VA (3)		COE-230/60AC	COL-230/60AC

(1) For other supply voltages available on request see technical tables E015, E018.
(2) Coil can be supplied also with 60 Hz of voltage frequency: in this case the performances are reduced by 10 ÷ 15% and the power consumption is 55 VA (DHL) and 58 VA (DHE)
(3) Average values based on tests performed at nominal hydraulic condition and ambient/coil temperature of 20°C.
(4) When solenoid is energized, the inrush current is approx 3 times the holding current.

11 DIMENSIONS [mm]

AGIR, AGIS, AGIU size 10

ISO 5781: 2000
Mounting surface: 5781-06-07-0-00
Fastening bolts:
4 socket head screws M10x45 class 12.9
Tightening torque = 70 Nm
Seals: 2 OR 109/70, 2 OR 3068
Ports A, B: Ø = 14 mm
Ports X, Y: Ø = 5 mm

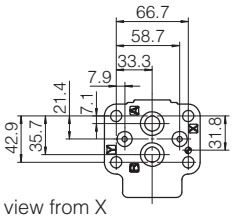

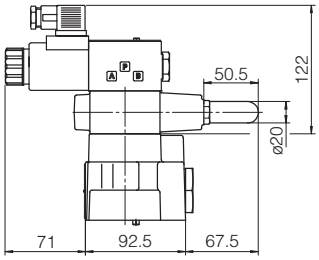

AGIU-10/10/-EX**
Mass = 5,6 Kg

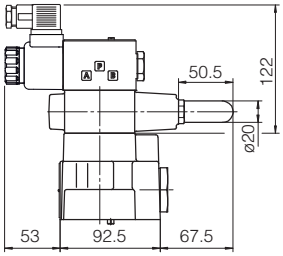

AGIU-10/10/-LX**
Mass = 5,4 Kg

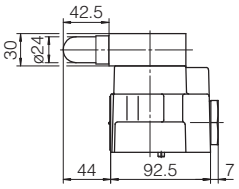

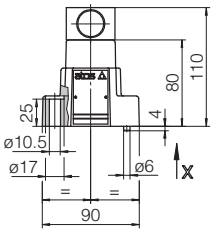

AGIR-10; Mass= 3,3 Kg
AGIRR-10; Mass= 3,5 Kg

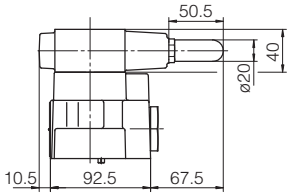

AGIS-10; Mass= 3,8 Kg
AGIU-10; Mass= 3,8 Kg

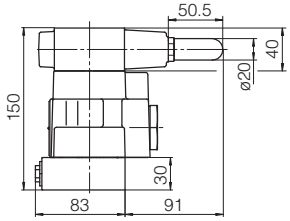

AGISR-10; Mass= 5,3 Kg

Overall dimensions refer to valves **DC** voltage, with connectors type 666

AGIR, AGIS, AGIU size 20

ISO 5781: 2000
Mounting surface: 5781-08-10-0-00
Fastening bolts:
4 socket head screws M10x45 class 12.9
Tightening torque = 70 Nm
Seals: 2 OR 109/70, 2 OR 4100
Ports A, B: Ø = 22 mm
Ports X, Y: Ø = 5 mm

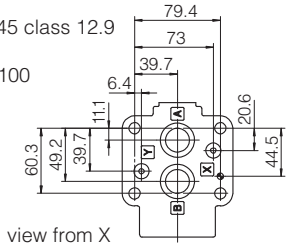

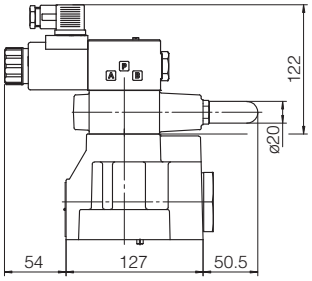

AGIU-20/10/-EX**
Mass = 7,8 Kg

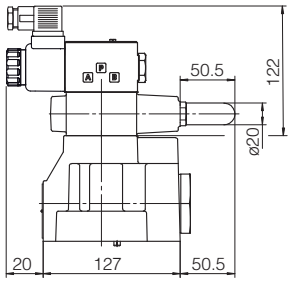

AGIU-20/10/-LX**
Mass = 7,6 Kg

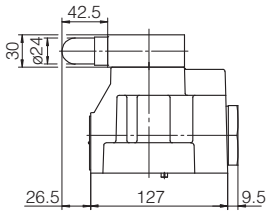

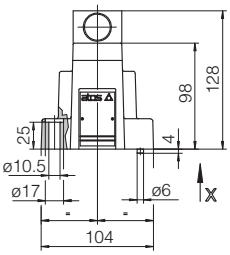

AGIR-20; Mass= 5,5 Kg
AGIRR-20; Mass= 5,7 Kg

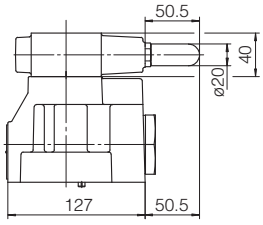

AGIS-20; Mass= 6 Kg
AGIU-20; Mass= 6 Kg

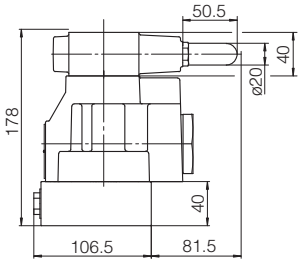

AGISR-20; Mass= 9 Kg

AGIR, AGIS, AGIU size 32

ISO 5781: 2000
Mounting surface: 5781-10-13-0-00
Fastening bolts:
6 socket head screws M10x45 class 12.9
Tightening torque = 70 Nm
Seals: 2 OR 109/70, 2 OR 4131
Ports A, B: Ø = 28 mm
Ports X, Y: Ø = 5 mm

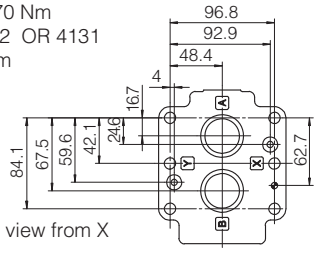

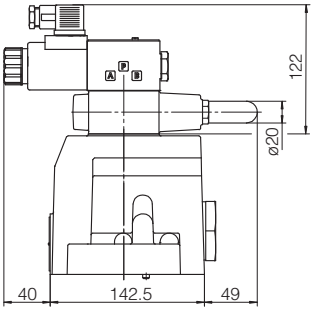

AGIU-32/10/-EX**
Mass = 11,7 Kg

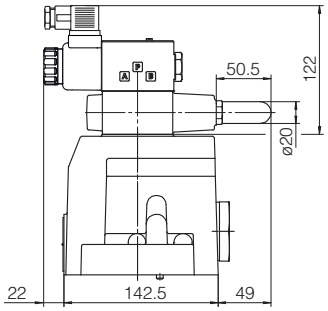

AGIU-32/10/-LX**
Mass = 11,5 Kg

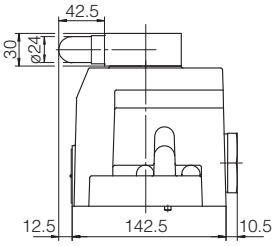

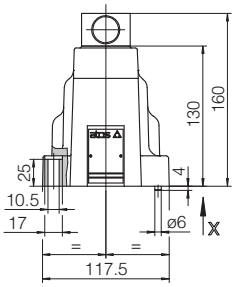

AGIR-32; Mass= 9,4 Kg
AGIRR-32; Mass= 9,6 Kg

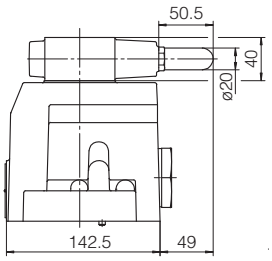

AGIS-32; Mass= 9,9 Kg
AGIU-32; Mass= 9,9 Kg

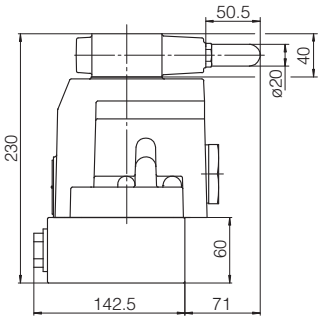

AGISR-32; Mass= 15.5 Kg

Overall dimensions refer to valves **DC** voltage, with connectors type 666

12 MOUNTING SUBPLATES

Valves	Subplate model	Port location	Ports				Ø Counterbore [mm]				Mass [Kg]
			A	B	X-Y	OUT	A	B	X-Y	OUT	
AGI*-10	BA-305	Ports A, B, Y underneath;	G 1/2"	G 1/2"	G 1/4"	-	30	30	21,5	-	1
AGI*-20	BA-505		G 1"	G 1"	G 1/4"	-	46	46	21,5	-	2
AGI*-32	BA-705		G 1 1/2"	G 1 1/2"	G 1/4"	-	63,5	63,5	21,5	-	7,5

The subplates are supplied with fastening bolts. For further details see table K280

Flow control valves type QV-06

pressure compensated, two way, ISO 4401 size 06

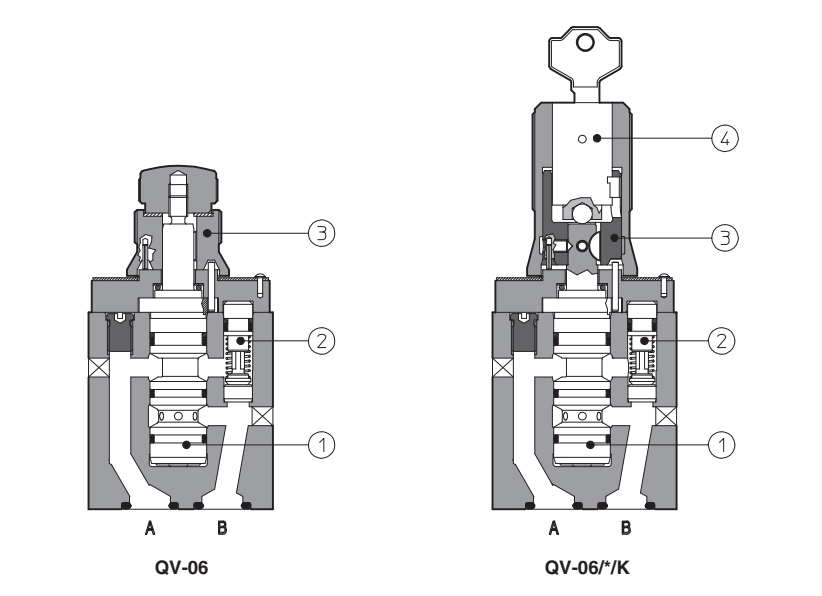

QV-06 QV-06/*/K

QV are flow control valves with pressure compensator ①: the controlled flow rate is independent of pressure variations.

They are usually supplied with a built-in check valve ② to allow the free flow in the opposite direction.

The flow is regulated by turning a graduate micrometer knob ③. Clockwise rotation increases the flow regulation.
Optional versions with locking key ④ on the adjustment knob are available on request.

Valves designed to operate in hydraulic systems with hydraulic mineral oil or synthetic fluid having similar lubricating characteristics.

Size: **06** - ISO 4401
Max flow: **24 l/min**
Max pressure: **250 bar**

1 MODEL CODE

QV	-	06	/	6	/	K		**	/	*

QV: Pressure compensated flow control valve

06: Size: **06**

6: Maximum adjustable flow rate:
1 = 1,5 l/min **11** = 11 l/min **24** = 24 l/min
6 = 6 l/min **16** = 16 l/min

K: Options:
K = with lock key for the setting knob
V = without by-pass check valve

******: Series number

*****: Seals material, see section 3:
- = NBR
PE = FKM
BT = HNBR

2 HYDRAULIC CHARACTERISTICS

Hydraulic symbols

with check valve (standard)

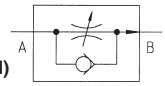

without check valve (option /V)

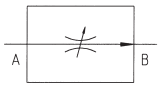

Valve model	QV-06/1	QV-06/6	QV-06/11	QV-06/16	QV-06/24
Max regulated flow [l/min]	1,5	6	11	16	24
Min regulated flow [cm³/min]	50				
Max flow B→A through check valve [l/min]	24				
Regulating Δp [bar]	3	3	5	6,5	8
Max flow on port A [l/min]	24				
Max pressure [bar]	250				

3 MAIN CHARACTERISTICS, SEALS AND FLUIDS - for other fluids not included in below table, consult our technical office

Assembly position	Any position
Compliance	RoHS Directive 2011/65/EU as last update by 2015/863/EU REACH Regulation (EC) n°1907/2006
Ambient temperature	Standard = -30°C ÷ +70°C /PE option = -20°C ÷ +70°C /BT option = -40°C ÷ +70°C
Seals, recommended fluid temperature	NBR seals (standard) = -20°C ÷ +80°C, with HFC hydraulic fluids = -20°C ÷ +50°C FKM seals (/PE option) = -20°C ÷ +80°C HNBR seals (/BT option) = -40°C ÷ +60°C, with HFC hydraulic fluids = -40°C ÷ +50°C
Recommended viscosity	15÷100 mm²/s - max allowed range 2,8 ÷ 500 mm²/s
Max fluid contamination level	ISO4406 class 20/18/15 NAS1638 class 9, see also filter section at www.atos.com or KTF catalog

Hydraulic fluid	Suitable seals type	Classification	Ref. Standard
Mineral oils	NBR, FKM, HNBR	HL, HLP, HLPD, HVLP, HVLPD	DIN 51524
Flame resistant without water	FKM	HFDU, HFDR	ISO 12922
Flame resistant with water	NBR, HNBR	HFC	

4 DIAGRAMS based on mineral oil ISO VG 46 at 50°C

4.1 Regulation diagram

1 = QV-06/1
2 = QV-06/6
3 = QV-06/11
4 = QV-06/16
5 = QV-06/24

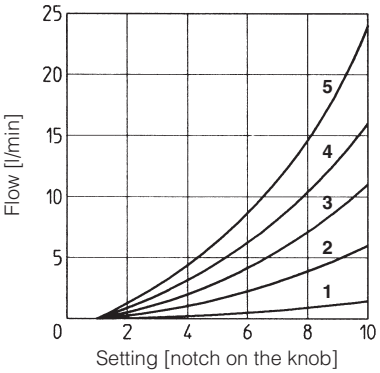

4.2 Q/Δp diagram through the check valve for free flow B→A

6 = QV-06/*

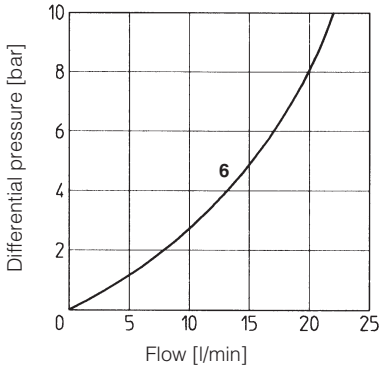

5 DIMENSIONS [mm]

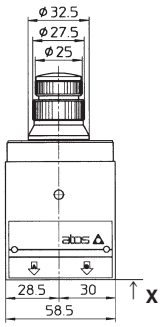

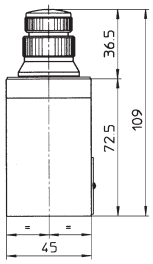

Mass: 1,2 Kg

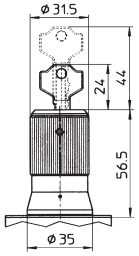

Option /K

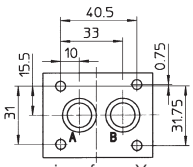

view from X

ISO 4401: 2005
Mounting surface: 4401-03-02-0-05
(see note 1)
Fastening bolts:
4 socket head screws M5x70 class 12.9
Tightening torque = 8 Nm
Seals: 2 OR 117
Diameter of ports A, B: Ø = 7 mm

ASSEMBLY IN MODULAR STACK
see section 6

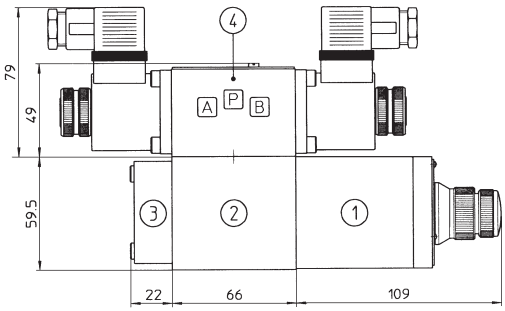

① = Flow control valve type QV-06
Note that the valve(s) is (are) mounted:
- on side port A for BHQ-011, BHQ-013, BHQ-016 and BHQ-023
- on side port B for BHQ-014 and BHQ-024
- on both sides for BHQ-012 and BHQ-022

② = Modular plate type BHQ, see section 6
③ = Closing element. This element can be on side port A or side port B depending on models. It is not present on BHQ-011, BHQ-016, BHQ-012 and BHQ-022
④ = Directional valve type DH* (ISO 4401 size 06)

note 1: the manifold interface has to be provided only of the A and B ports.
The valve cannot be installed on manifolds with ISO 4401-AB-03 interface with P and T ports.

6 MODULAR PLATES TYPE BHQ

The modular plates type BHQ allow the assembling of valves type QV-06 in a modular stack with other components having ISO 4401 size 06 mounting surface. See below for model code and functional sketches; see section 5 for dimensions and example of assembly.

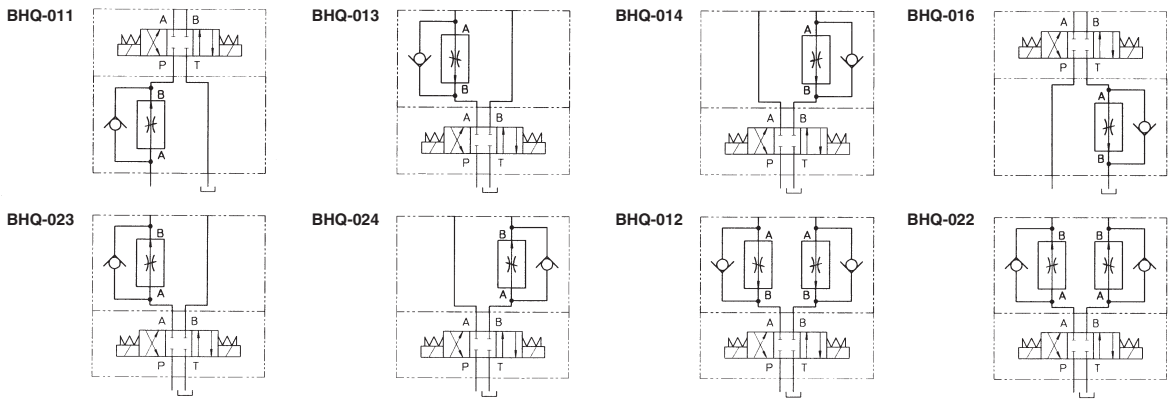

Available also version for phosphate ester (add /PE at the end of the model code).

7 MOUNTING PLATES TYPE BA

Valve	Subplate model	Ports location	Ports A, B, P, T	Ø Counterbore [mm] A, B, P, T	Mass [Kg]
QV-06	BA-202/Q	Ports A, B, P, T underneath;	G 3/8”	–	1,2
	BA-204/Q	Ports P, T underneath; Ports A, B on lateral side	G 3/8”	25,5	1,2
	BA-302/Q	Ports A, B, P, T underneath;	G 1/2”	30	1,8

Flow restrictor valves type AQFR

in-line mounting - from G 3/8" to G 1¹/₄" threaded ports

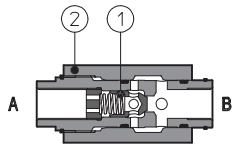

AQFR-10

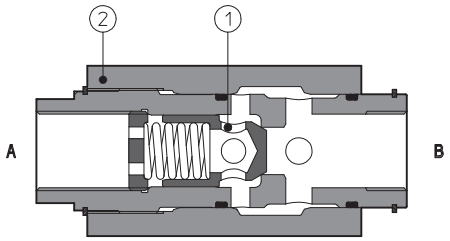

AQFR-32

AQFR are not compensated flow throttling valves with a built-in check valve ① to allow the free flow in the opposite direction.

The flow adjustement is done by turning the external exagon ②. Clockwise rotation increases the throtting (reduced passage). The regulated flow is a function of the pressure drop existing between the inlet and outlet ports.

They are available in five sizes: from 3/8" to 1 ¹/₄" GAS with flow up 30, 50, 80, 160, 250 l/min respectively and pressure up to 400/350 bar (depending on size).

Max flow: **250 l/min**
Max pressure: **400 bar**

1 MODEL CODE

AQF	R	-	10	**	/	*

Throtting valve in-line mounting

R = with check valve for free reverse flow

Size and ports dimensions:

10 = G 3/8" **15** = G 1/2" **20** = G 3/4" **25** = G 1" **32** = G 1 ¹/4"

Series number

Seals material, see section 3:
- = NBR
PE = FKM
BT = HNBR

2 HYDRAULIC CHARACTERISTICS

Hydraulic symbol

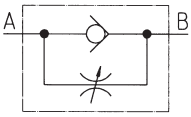

Valve model		AQFR-10	AQFR-15	AQFR-20	AQFR-25	AQFR-32
Max recommended flow	[l/min]	30	50	80	160	250
Max pressure	[bar]	400	350			

3 MAIN CHARACTERISTICS, SEALS AND FLUIDS - for other fluids not included in below table, consult our technical office

Assembly position	Any position
Compliance	RoHS Directive 2011/65/EU as last update by 2015/863/EU REACH Regulation (EC) n°1907/2006
Ambient temperature	Standard execution = -30°C ÷ +70°C; /PE option = -20°C ÷ +70°C; /BT option = -40°C ÷ +70°C
Seals, recommended fluid temperature	NBR seals (standard) = -20°C ÷ +80°C, with HFC hydraulic fluids = -20°C ÷ +50°C FKM seals (/PE option) = -20°C ÷ +80°C HNBR seals (/BT option) = -40°C ÷ +60°C, with HFC hydraulic fluids = -40°C ÷ +50°C
Recommended viscosity	15÷100 mm²/s - max allowed range 2,8 ÷ 500 mm²/s
Max fluid contamination level	ISO4406 class 20/18/15 NAS1638 class 9, see also filter section at www.atos.com or KTF catalog

Hydraulic fluid	Suitable seals type	Classification	Ref. Standard
Mineral oils	NBR, FKM, HNBR	HL, HLP, HLPD, HVLP, HVLPD	DIN 51524
Flame resistant without water	FKM	HFDU, HFDR	ISO 12922
Flame resistant with water	NBR, HNBR	HFC	

4 DIAGRAMS based on mineral oil ISO VG 46 at 50°C

4.1 Q/Δp diagram through the chec valve for free flow B→A with the throttle valve fully open and fully closed

1 = AQFR-10 fully closed
2 = AQFR-10 fully open
3 = AQFR-15 fully closed
4 = AQFR-15 fully open
5 = AQFR-20 fully closed
6 = AQFR-20 fully open
7 = AQFR-25 fully closed
8 = AQFR-25 fully open
9 = AQFR-32 fully closed
10 = AQFR-32 fully open

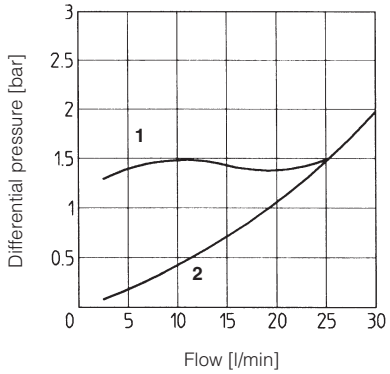

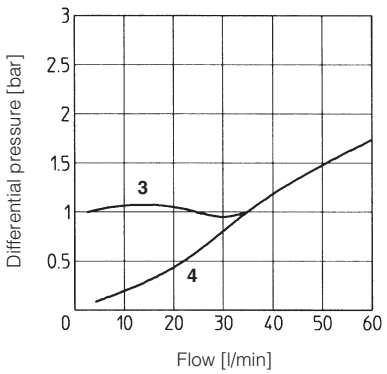

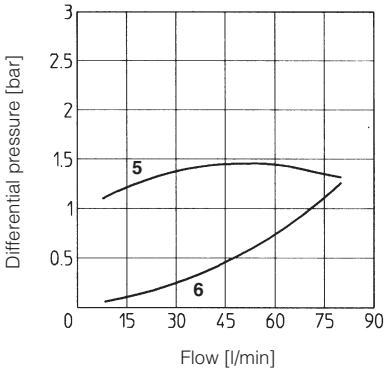

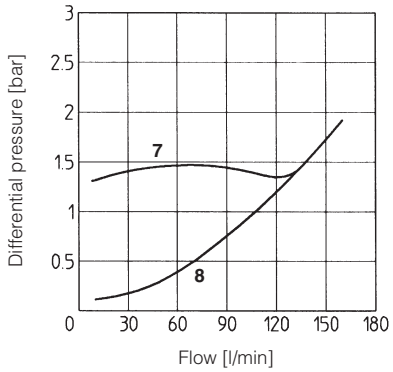

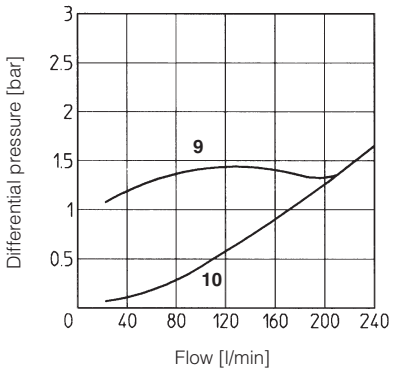

5 DIMENSIONS [mm]

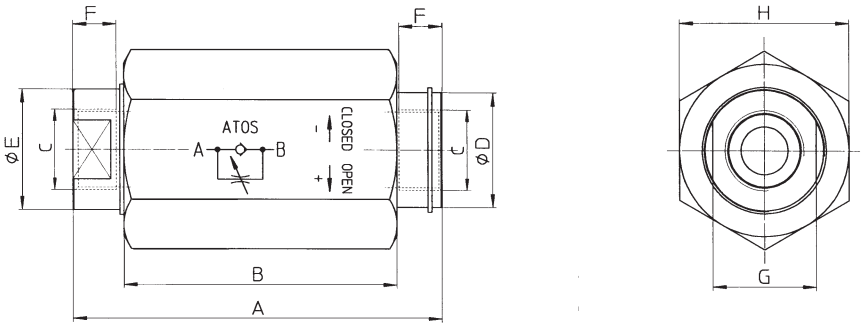

Valve model	A	B	C	ØD	ØE	F	G	H	Mass [Kg]
AQFR-10	93	68	G 3/8”	28	25	13	24	41	0,7
AQFR-15	105	78	G 1/2”	32	30	15	27	46	1
AQFR-20	127	95,5	G 3/4”	36	34	17	32	55	1,6
AQFR-25	153	112	G 1”	48	45	19	42	75	3,5
AQFR-32	196	145	G 1 1/4”	63	60	21	55	90	6,5

Cartridge check valves type DB, DR

screw-in mounting - from G1/4” to G1/2”

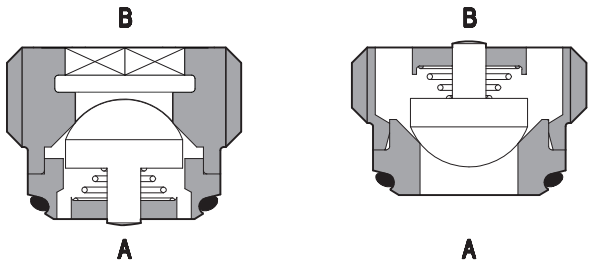

DB-5/G **DR-5/G**

DB, **DR** are direct operated check valves for screw-in mounting in cavities from G1/4” to G1/2”.
They are specifically designed to reduce the manifold dimensions and simplify the installation.
Cartridge designed to operate in hydraulic systems with hydraulic mineral oil or synthetic fluid having similar lubricating characteristics.

Flow up to **95 l/min**.

Max pressure: **350 bar**

1 MODEL CODE

D	B	-	10	/	G	**	/	*

Screw-in check valve

B = function A → B
R = function B → A

Size/threated connections:
5 = G 1/4” **10** = G 3/8” **15** = G 1/2”

G = Gas threading

Series number

Seals material, see section 3:
- = NBR
PE = FKM
BT = HNBR

2 HYDRAULIC CHARACTERISTICS

Hydraulic symbol	DB-*/G			DR-*/G		
Valve model	**DB-5/G**	**DR-5/G**	**DB-10/G**	**DR-10/G**	**DB-15/G**	**DR-15/G**
Nominal flow (at Δp = 8 bar) [l/min]	25	35	55	65	85	95
Max pressure [bar]	350					
Cracking pressure [bar]	0,3					

3 MAIN CHARACTERISTICS, SEALS AND FLUIDS - for other fluids not included in below table, consult our technical office

Assembly position	Any position
Compliance	RoHS Directive 2011/65/EU as last update by 2015/863/EU REACH Regulation (EC) n°1907/2006
Ambient temperature	Standard = -30°C ÷ +70°C /PE option = -20°C ÷ +70°C /BT option = -40°C ÷ +70°C
Seals, recommended fluid temperature	NBR seals (standard) = -20°C ÷ +80°C, with HFC hydraulic fluids = -20°C ÷ +50°C FKM seals (/PE option) = -20°C ÷ +80°C HNBR seals (/BT option) = -40°C ÷ +60°C, with HFC hydraulic fluids = -40°C ÷ +50°C
Recommended viscosity	15÷100 mm²/s - max allowed range 2,8 ÷ 500 mm²/s
Max fluid contamination level	ISO4406 class 20/18/15 NAS1638 class 9, see also filter section at www.atos.com or KTF catalog
Flow direction	As shown in the symbol at section 2
Rated flow	See diagrams Q/Δp at section 4

Hydraulic fluid	Suitable seals type	Classification	Ref. Standard
Mineral oils	NBR, FKM, HNBR	HL, HLP, HLPD, HVLP, HVLPD	DIN 51524
Flame resistant without water	FKM	HFDU, HFDR	ISO 12922
Flame resistant with water	NBR, HNBR	HFC	

4 FLOW VERSUS PRESSURE DROP DIAGRAMS based on mineral oil ISO VG 46 at 50°C

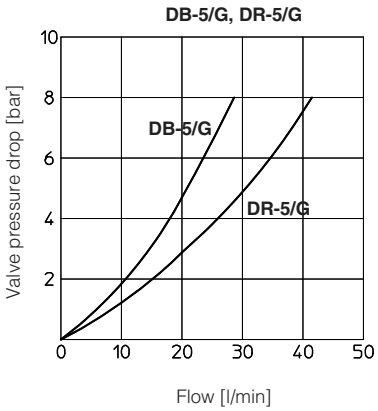

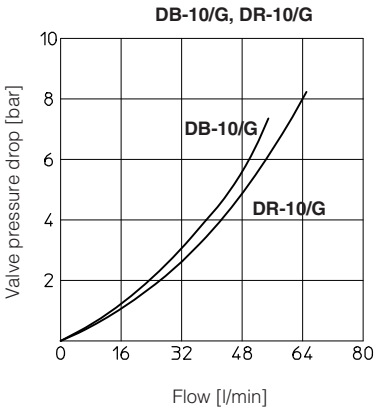

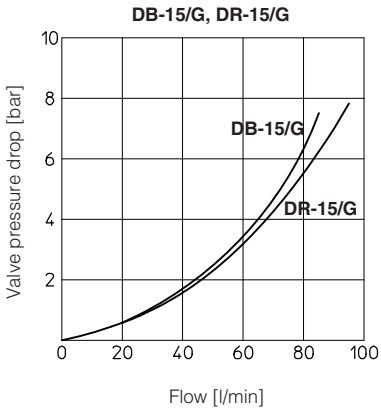

5 RECESS DIMENSIONS [mm]

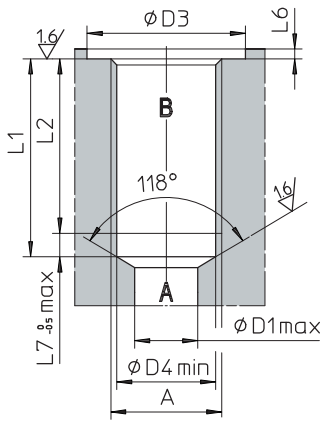

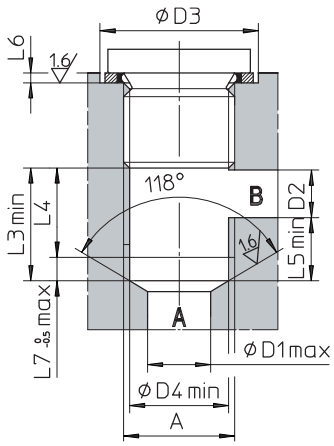

	A	D1	D2	D3	D4	L1	L2	L3	L4	L5	L6	L7
DB-5/G	G 1/4”	8	6	22	11,6	22	19	14	11	8	1,5	3
DR-5/G												
DB-10/G	G 3/8”	9	8	26	15	24	21	17	14	9	1,5	3
DR-10/G												
DB-15/G	G 1/2”	12	12	30	18,75	28	24,5	22	18,5	10	1,5	3,5
DR-15/G												

6 VALVE DIMENSIONS [mm]

DB
DR

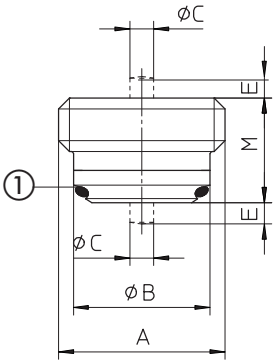

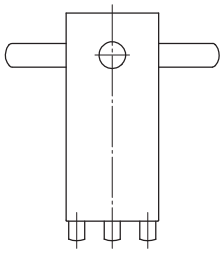

***-DRG-205000**

Note: this special key is required for assembling the valve in the cavity

	A	B	C	E	M	1	Mass (Kg)
DB-5/G	G 1/4”	11,5	2,1	1,5	10,3	OR-9x1/70	0,060
DR-5/G			2,4		9		
DB-10/G	G 3/8”	15	2,8	2	11,3	OR-11x1,5/70	0,012
DR-10/G			3,3	2,5	11,4		
DB-15/G	G 1/2”	18,5	3,2	2,5	12,9	OR-14x1,5/70	0,020
DR-15/G			4	2,5	13,6		

	A	KEY	Tightening torque (Nm)
DB-5/G	G 1/4”	CH 7 ⬡	15
DR-5/G		5-DRG-205000	
DB-10/G	G 3/8”	CH 6 ⬡	20
DR-10/G		10-DRG-205000	
DB-15/G	G 1/2”	CH 8 ⬡	40
DR-15/G		15-DRG-205000	

Check valves type ADR

in-line mounting - from G 1/4" to G 1 1/4" threaded ports

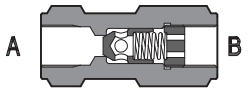

ADR-10

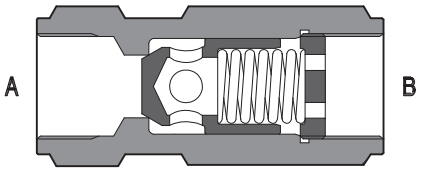

ADR-32

ADR are direct operated check valves for in-line mounting available with port size from 1/4" to 1 1/4" GAS.

Cartridge designed to operate in hydraulic systems with hydraulic mineral oil or synthetic fluid having similar lubricating characteristics.

Flow up to **500 l/min**
Pressure up to **400 bar**

1 MODEL CODE

ADR	-	10	/	4	**	/	**
Check valve in-line mounting					Series number		Fluid temperature: - = -20°C ÷ +80°C **BT** = -40°C ÷ +80°C

Size/threated connections:
06 = G 1/4"
10 = G 3/8"
15 = G 1/2"
20 = G 3/4"
25 = G 1"
32 = G 1 1/4"

Cracking pressure:
- = 0,5 bar
/2 = 2 bar
/4 = 4 bar
/8 = 8 bar

2 HYDRAULIC CHARACTERISTICS

Hydraulic symbol						
Valve model	**ADR-06**	**ADR-10**	**ADR-15**	**ADR-20**	**ADR-25**	**ADR-32**
Max recommended flow [l/min]	40	80	150	300	360	500
Max pressure [bar]	400		350			

3 MAIN CHARACTERISTICS, SEALS AND FLUIDS - for other fluids not included in below table, consult our technical office

Assembly position	Any position
Compliance	RoHS Directive 2011/65/EU as last update by 2015/863/EU REACH Regulation (EC) n°1907/2006
Fluid	Hydraulic oil as per DIN 51524 ... 535;
Fluid temperature	Standard version = -20°C ÷ +80°C BT option = -40°C ÷ +80°C
Recommended viscosity	15÷100 mm²/s - max allowed range 2,8 ÷ 500 mm²/s
Max fluid contamination level	ISO4406 class 20/18/15 NAS1638 class 9, see also filter section at www.atos.com or KTF catalog
Flow direction	As shown in the symbol at section 2
Rated flow	See diagrams Q/Δp at section 4

4 FLOW VERSUS PRESSURE DROP DIAGRAMS Based on based on mineral oil ISO VG 46 at 50°C

ADR-06

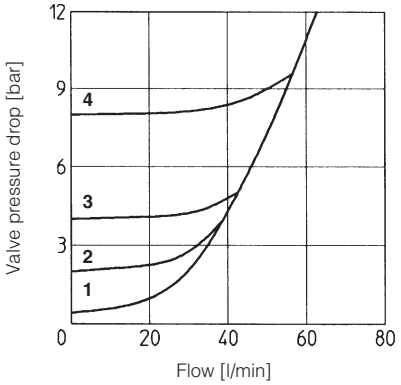

1 = ADR-06
2 = ADR-06/2
3 = ADR-06/4
4 = ADR-06/8

ADR-10

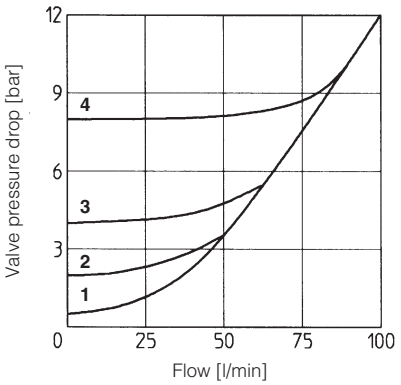

1 = ADR-10
2 = ADR-10/2
3 = ADR-10/4
4 = ADR-10/8

ADR-15

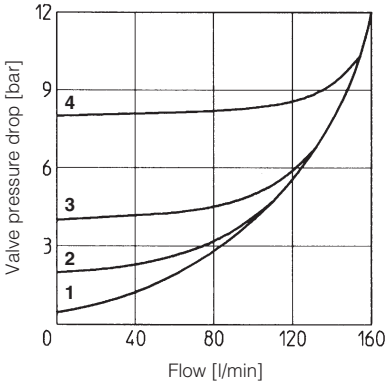

1 = ADR-15
2 = ADR-15/2
3 = ADR-15/4
4 = ADR-15/8

ADR-20

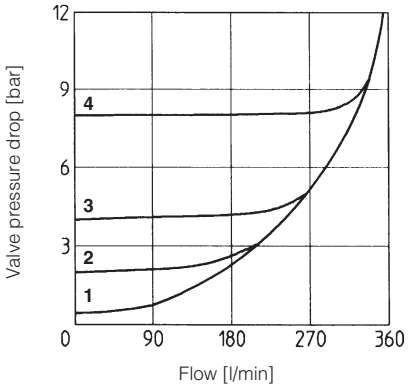

1 = ADR-20
2 = ADR-20/2
3 = ADR-20/4
4 = ADR-20/8

ADR-25

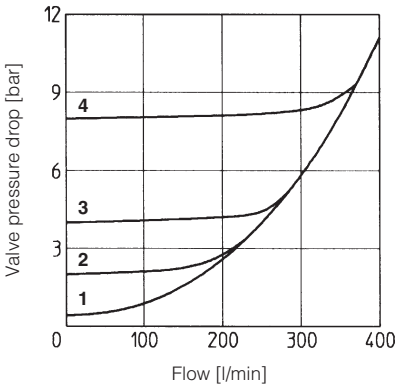

1 = ADR-25
2 = ADR-25/2
3 = ADR-25/4
4 = ADR-25/8

ADR-32

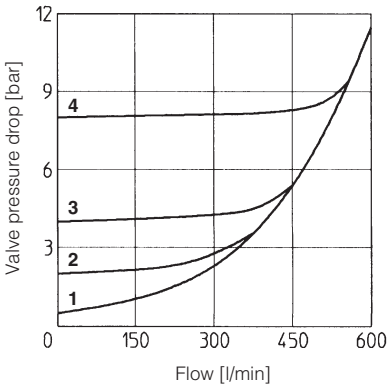

1 = ADR-32
2 = ADR-32/2
3 = ADR-32/4
4 = ADR-32/8

5 DIMENSIONS [mm]

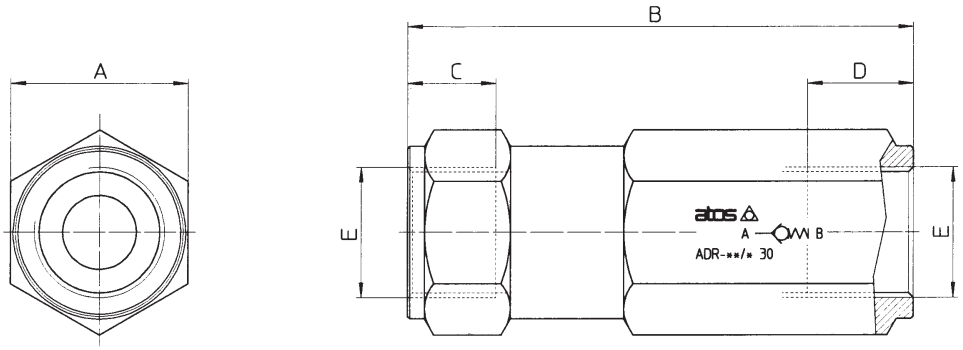

Model	A	B	C	D	E	Mass [kg]
ADR - 06	22	67	12	13	G 1/4”	0,2
ADR - 10	27	70	12	13	G 3/8”	0,4
ADR - 15	32	82,5	14	17	G 1/2”	0,6
ADR - 20	36	102,5	16	21,5	G 3/4”	0,9
ADR - 25	46	120	18	24,5	G 1”	2,1
ADR - 32	55	137,5	20	23	G 1 1/4”	2,5

Pilot operated check valves type ADRL, AGRL, AGRLE

in-line mounting, port size from G 3/8” to G 1 1/4”
subplate mounting, ISO 5781 size 10, 20 and 32

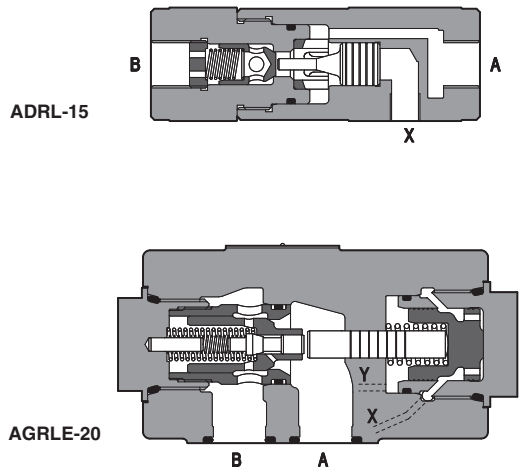

ADRL are pilot operated (port X) check valves for in-line mounting available with port size from 3/8" GAS to 1 1/4" GAS.
Flow up to 300 l/min.
Pressure up to 400 bar.

AGRL and **AGRLE** are pilot operated (port X) check valves for subplate mounting available with mounting surface ISO 5781 size 10, 20 and 32.
Flow up to 500 l/min.
Max pressure: 315 bar.

AGRLE versions have an external drain (port Y) of the pilot chamber to permit a correct use of pilot operated check valve in systems where valve must open in presence of pressure at port A: infact pressure at port A, on regular pilot operated check valves, may affect the check opening by acting against the pilot device.

Valves designed to operate in hydraulic systems with hydraulic mineral oil or synthetic fluid having similar lubricating characteristics.

1 MODEL CODE

AGRL | **E** | - | **10** | / | * | ** | / | *

ADRL =pilot operated check valve in-line mounting
AGRL =pilot operated check valve subplate mounting

Only for AGRL:
- = without external drain
E = with external drain

Threaded connections for ADRL:
10 = G 3/8”
15 = G 1/2”
20 = G 3/4”
32 = G 1 1/4”

Size for AGRL and AGRLE:
10 **20** **32**

Cracking pressure
for ADRL
- = 0,5 bar
2 = 2 bar
4 = 4 bar
8 = 8 bar
for AGRL
- = 0,5 bar

Series number

Seals material, see section 4:
- = NBR
PE = FKM
BT = HNBR

2 HYDRAULIC CHARACTERISTICS

Hydraulic symbols

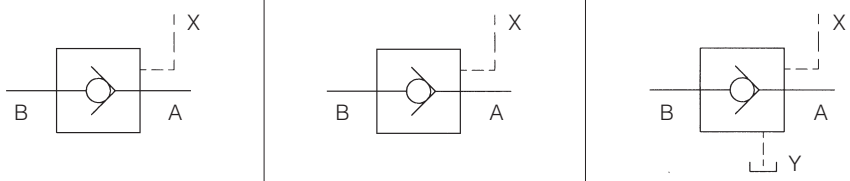

Model	ADRL-10	ADRL-15	ADRL-20	ADRL-32	AGRL-10	AGRL-20	AGRL-32	AGRLE-10	AGRLE-20	AGRLE-32
Piloting ratio (1)	2,8	2,7	2,5	2,3	13,6	14,0	14,4	13,6	14,0	14,4
Max recommended flow [l/min]	30	60	100	300	160	300	500	160	300	500
Max pressure [bar]	400	350			315					

(1) Applying the pilot pressure through the pilot port X, the pilot spool opens the check valve, allowing free flow B→A.
The minimum pilot pressure for correct operation depends on the pilot ratio indicated in the table and on the pressure closing the check. i.e.: the pilot pressure for ADRL-20 is the pressure on the check divided by 2,5. The valves AGRL-* and AGRLE-*, are equipped with a decompression system.

3 MAIN CHARACTERISTICS, SEALS AND FLUIDS - for other fluids not included in below table, consult our technical office

Assembly position	Any position. For AGRLE valves, the drain port Y has to be connected directly to the tank without counter pressure
Compliance	RoHS Directive 2011/65/EU as last update by 2015/863/EU REACH Regulation (EC) n°1907/2006
Ambient temperature	Standard execution = -30°C ÷ +70°C /PE option = -20°C ÷ +70°C /BT option = -40°C ÷ +70°C
Seals, recommended fluid temperature	NBR seals (standard) = -20°C ÷ +80°C, with HFC hydraulic fluids = -20°C ÷ +50°C FKM seals (/PE option) = -20°C ÷ +80°C HNBR seals (/BT option) = -40°C ÷ +60°C, with HFC hydraulic fluids = -40°C ÷ +50°C
Recommended viscosity	15÷100 mm^2/s - max allowed range 2,8 ÷ 500 mm^2/s
Max fluid contamination level	ISO4406 class 20/18/15 NAS1638 class 9, see also filter section at www.atos.com or KTF catalog
Subplate surface finishing	Roughness index Ra 0,4 - flatness ratio 0,01/100 (ISO 1101)

Hydraulic fluid	Suitable seals type	Classification	Ref. Standard
Mineral oils	NBR, FKM, HNBR	HL, HLP, HLPD, HVLP, HVLPD	DIN 51524
Flame resistant without water	FKM	HFDU, HFDR	ISO 12922
Flame resistant with water	NBR, HNBR	HFC	

4 FLOW VERSUS PRESSURE DROP DIAGRAMS FOR ADRL based on mineral oil ISO VG 46 at 50°C

1 = **ADRL-10** B→A
2 = **ADRL-10** A→B
3 = **ADRL-15** B→A
4 = **ADRL-15** A→B
5 = **ADRL-20** B→A
6 = **ADRL-20** A→B
7 = **ADRL-32** B→A
8 = **ADRL-32** A→B

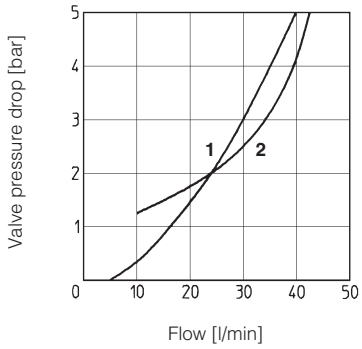

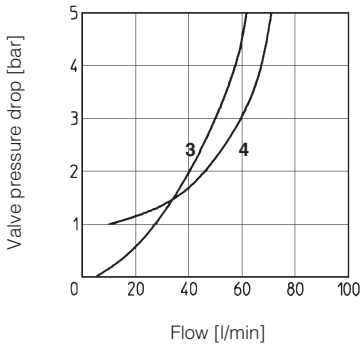

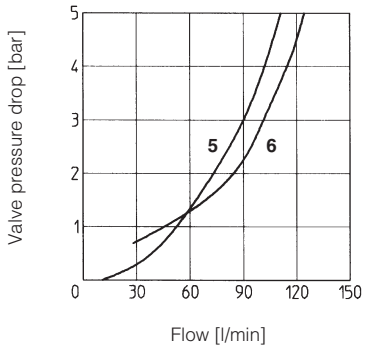

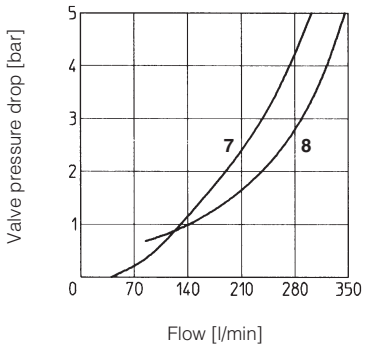

5 FLOW VERSUS PRESSURE DROP DIAGRAMS FOR AGRL AND AGRLE based on mineral oil ISO VG 46 at 50°C

1 = **AGRL-10, AGRLE-10** B→A
2 = **AGRL-10, AGRLE-10** A→B
3 = **AGRL-20, AGRLE-20** B→A
4 = **AGRL-20, AGRLE-20** A→B
5 = **AGRL-32, AGRLE-32** B→A
6 = **AGRL-32, AGRLE-32** A→B

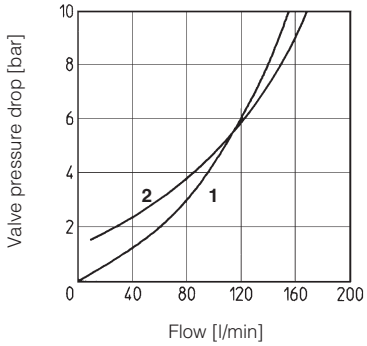

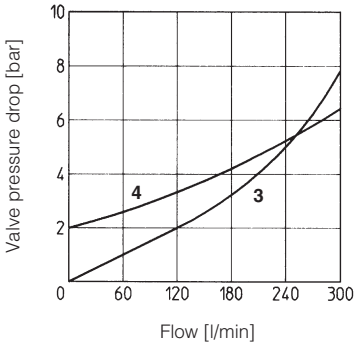

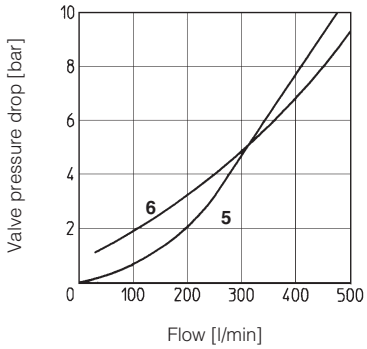

6 DIMENSIONS FOR ADRL VALVES [mm]

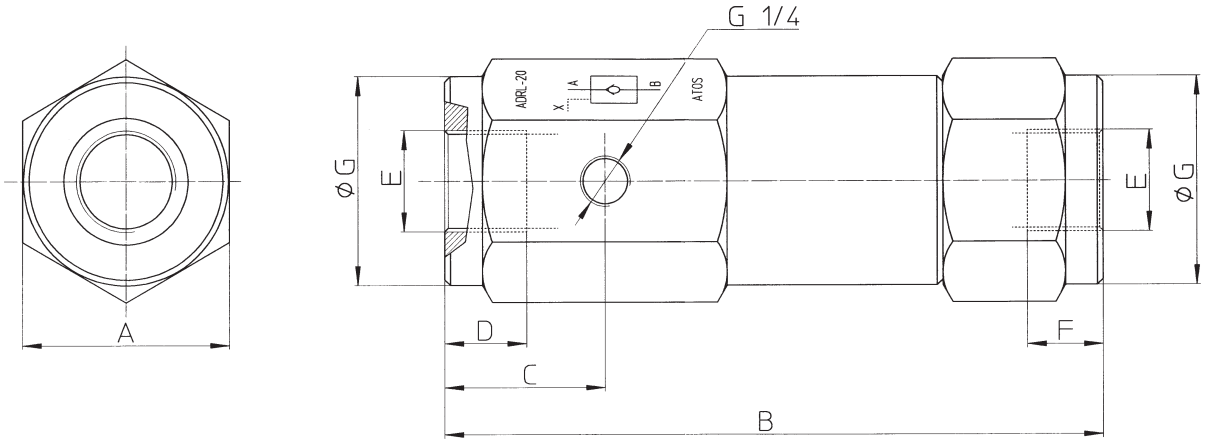

Model	A	B	C	D	E	F	ØG	Mass [Kg]
ADRL-10	41	120	30	14	G 3/8”	12	40	1
ADRL-15	50	145	33	16	G 1/2”	16	49	2
ADRL-20	55	175	42,5	18,5	G 3/4”	19	54,5	2,5
ADRL-32	90	245	53	23,5	G 1 1/4”	25	87,5	7

7 DIMENSIONS FOR AGRL AND AGRLE VALVES [mm]

AGRL-10
AGRLE-10

ISO 5781: 2000
Mounting surface: 5781-06-07-0-00
Fastening bolts: 4 socket head screws M10x45 class 12.9
Tightening torque = 70 Nm
Seals: 2 OR 3068; 2 OR 109/70
Ports A, B: Ø = 15 mm
Ports X, Y: Ø = 5 mm

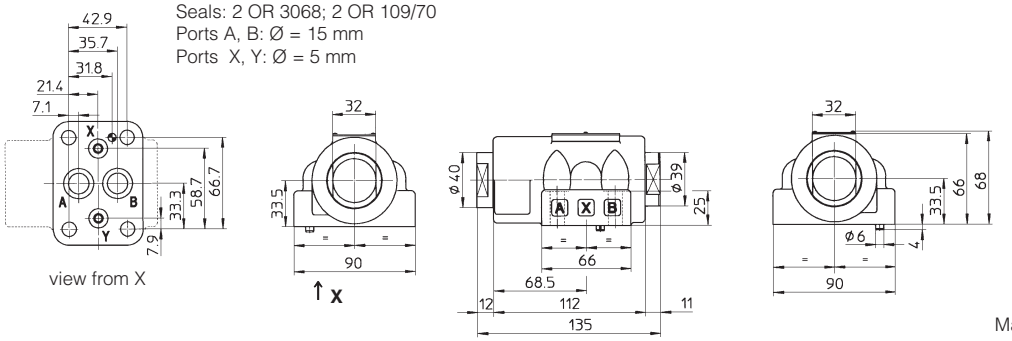

Mass: 4 Kg

AGRL-20
AGRLE-20

ISO 5781: 2000
Mounting surface: 5781-08-10-0-00
Fastening bolts: 4 socket head screws M10x45 class 12.9
Tightening torque = 70 Nm
Seals: 2 OR 4100; 2 OR 109/70
Ports A, B: Ø = 23 mm
Ports X, Y: Ø = 5 mm

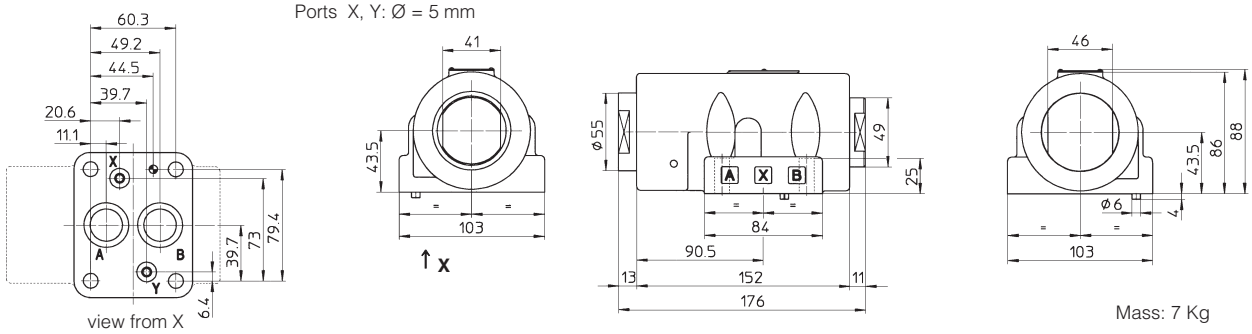

Mass: 7 Kg

AGRL-32
AGRLE-32

ISO 5781: 2000
Mounting surface: 5781-10-13-0-00
Fastening bolts: 6 socket head screws M10x100 class 12.9
Tightening torque = 70 Nm
Seals: 2 OR 4131; 2 OR 109/70
Ports A, B: Ø = 30 mm
Ports X, Y: Ø = 5 mm

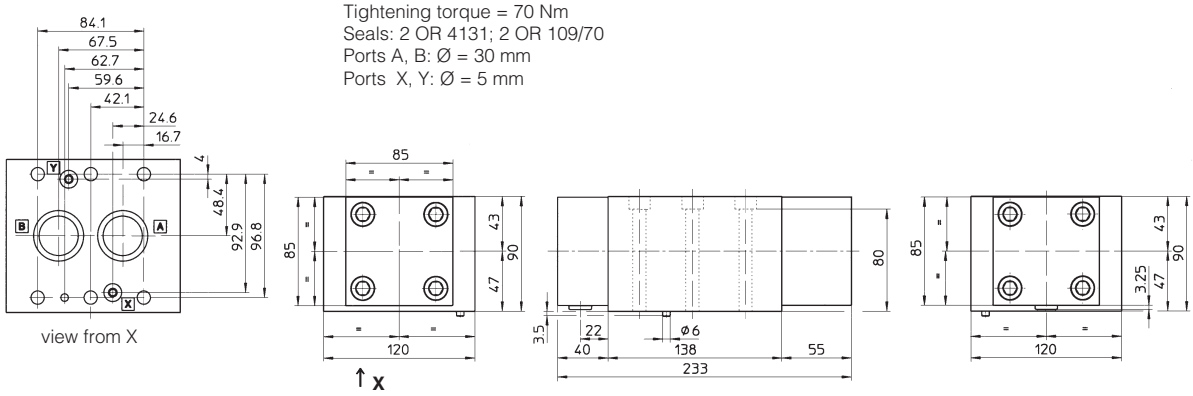

Mass: 14,8 Kg

8 MOUNTING SUBPLATES FOR AGRL AND AGRLE VALVES

Valve	Subplate model	Port location	GAS ports				Ø Counterbore [mm]				Mass [kg]
			A	B	X	Y	A	B	X	Y	
AGRL-10, AGRLE-10	BA-305	Ports A, B, X, Y underneath;	1/2”	1/2”	1/4”	1/4”	30	30	21,5	21,5	1
AGRL-20, AGRLE-20	BA-505		1”	1”	1/4”	1/4”	46	46	21,5	21,5	2
AGRL-32, AGRLE-32	BA-705		1 1/2”	1 1/2”	1/4”	1/4”	63,5	63,5	21,5	21,5	7,5

The subplates are supplied with fastening bolts. For further details see table K280.

Safety directional valves with spool position monitoring

On-off, direct operated, conforming to Machine Directive 2006/42/EC - certified by

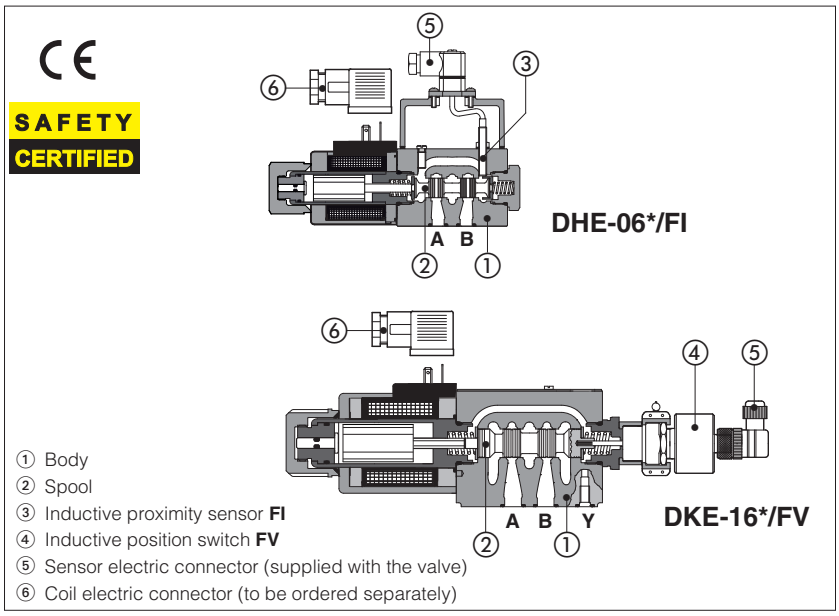

Direct operated safety directional valves with spool position monitoring, **CE** marked and certified by **TÜV** in accordance with safety requirements of Machine Directive 2006/42/EC.

DHE, size 06, high performances, for AC and DC supply with cURus certified solenoids

DKE, size 10, for AC and DC supply with cURus certified solenoids

The valves are equipped with **FI** inductive proximity sensor or **FV** inductive position switch for the spool position monitoring, see section 1 and 11 for sensors availability and technical characteristics.

Certification
The **TÜV** certificate can be downloaded from www.atos.com, catalog on line, technical information section.

Mounting surface: **ISO 4401**, size **06** and **10**

Max flow: **DHE 80 l/min**
DKE 150 l/min

Max pressure: **350 bar**

1 RANGE OF VALVE'S MODELS

Valve code	Size	Description	DC solenoids		AC solenoids	
			Sensor type			
			/FI	/FV	/FI	/FV
DHE-06	06	direct operated solenoid valves, on-off, single solenoid	•	•	•	•
DHE-07	06	direct operated solenoid valves, on-off, double solenoid	•	•	•	
DKE-16	10	direct operated solenoid valves, on-off, single solenoid	•	•	•	•
DKE-17	10	direct operated solenoid valves, on-off, double solenoid	•	•	•	

Notes:
FI = inductive proximity sensor, type NO (normally open) or NC (normally closed)
FV = inductive position switch providing both NO and NC contacts to be wired on the electric connector
See section 11 for sensor's characteristics

1.1 FI sensor & FV switch configurations

Single solenoid valves size 06 & 10 are provided with n°1 FI sensor or n° 1 FV switch for the spool position monitoring

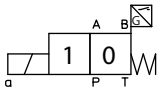

FI or FV

Double solenoid valves size 06 & 10 are provided with n° 2 FI sensors or n° 1 FV switch for the spool position monitoring

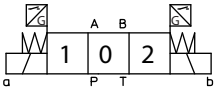

FI

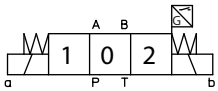

FV

Double solenoid valves size 06 with detent are provided with n°2 FI sensors or n° 1 FV switch for the spool position monitoring

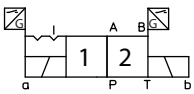

FI

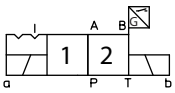

FV

Double solenoid valves size 10 with detent are provided with n° 1 FI sensor or n° 1 FV switch for the spool position monitoring

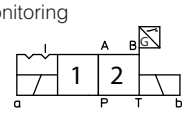

FI or FV

For model code of DHE safety valves, see section 2
For model code of DKE safety valves, see section 4

2 MODEL CODE OF DHE

DHE	-	0	63	1/2	/	A	/	FV	*	-	X	24DC	**	/	*

Directional control valve size 06
DHE = max flow 80 l/min

Size ISO 4401
0 = size 06

Valve configuration, see section 3
61 = single solenoid, central plus external position, spring centered
63 = single solenoid, 2 external positions, spring offset
67 = single solenoid, external plus central position, spring offset
71 = double solenoid, 3 positions, spring centered
75 = double solenoid, 2 external positions, with detent

Spool type, see section 3

Options, see section 8

(1) the **FV** inductive position switch provides both NC and NO contacts

Spool position monitor:
FI = inductive proximity switch
FV = inductive position switch (double contact)

Electrical signal - only for **FI** version (1):
/NC = electric contact is closed when the valve is de-energized
/NO = electric contact is open when the valve is de-energized

X = without connector, see section 10 for available connectors, to be ordered separately

Voltage code, see section 9

Series number

Seals material see sect. 6,7
- = NBR
PE = FKM

3 CONFIGURATIONS AND SPOOLS (representation according to ISO 1219-1)

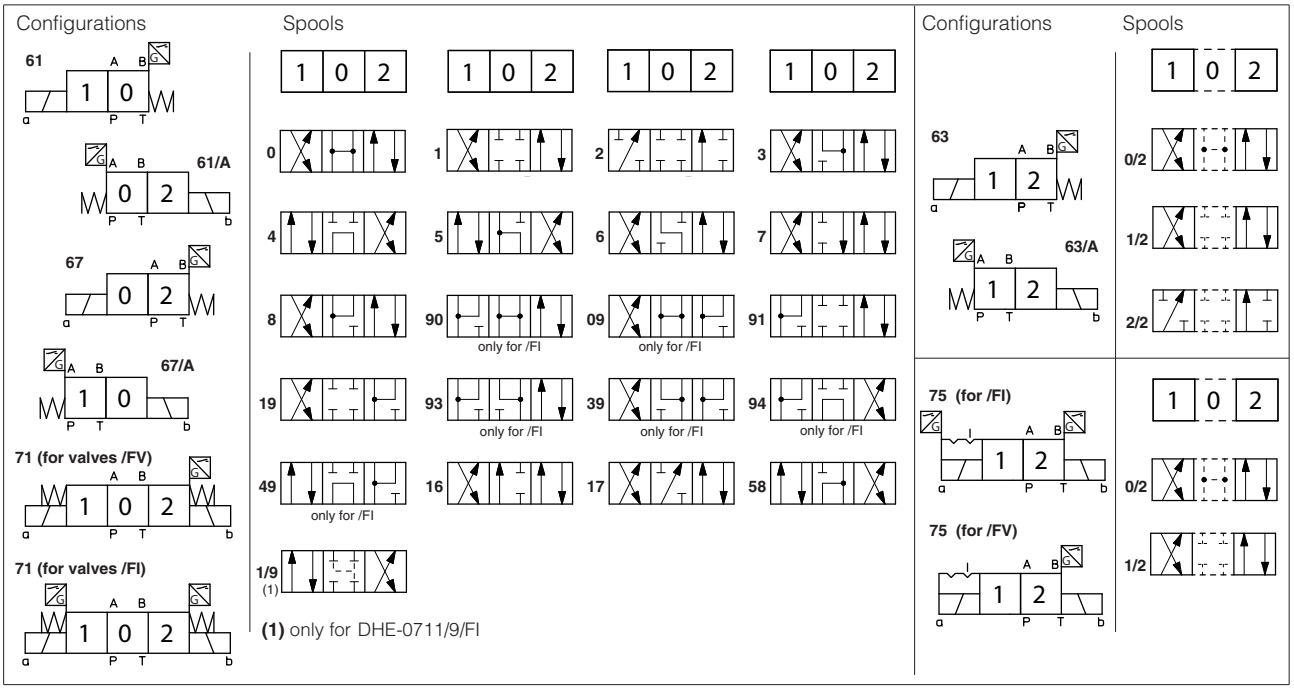

3.1 Configuration for spool */7

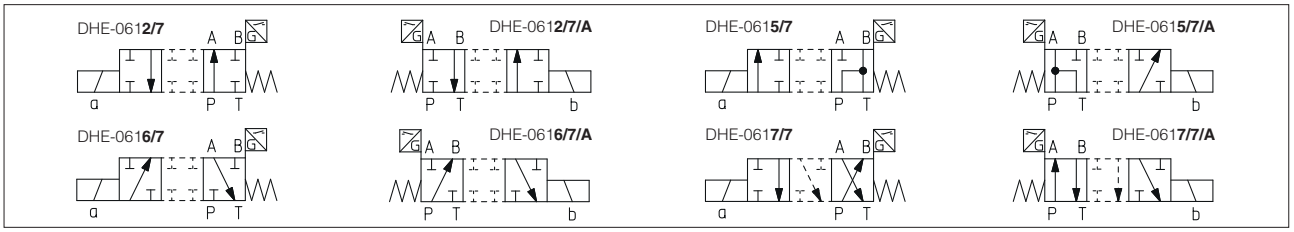

3.2 Special shaped spools for DHE

- spools type **0** and **3** are also available as **0/1** and **3/1** with restricted oil passages in central position, from user ports to tank.
- spools type **1, 4**, **5** and **58** are also available as **1/1, 4/8, 5/1** and **58/1**.
  They are properly shaped to reduce water-hammer shocks during the swiching.
- spools type **1, 1/2, 3, 8** are available as **1P, 1/2P, 3P, 8P** to limit valve internal leakages.
- Other types of spools can be supplied on request.

3.3 Standard spool availability for DHE - spools not listed in the table are available for all valves models

Valve type	standard spool						
	09	90	39	93	49	94	1/9
DHE/FI	•	•	•	•	•	•	•
DHE/FV							

4 MODEL CODE OF DKE

DKE	-	1	63	1/2	/	A	/	FV	*	-	X	24DC	**	/	*

Directional control valve size 10

Size ISO 4401
1 = size 10

Valve configuration, see section 5
61 = single solenoid, central plus external position, spring centered
63 = single solenoid, 2 external positions, spring offset
67 = single solenoid, external plus central position, spring offset
71 = double solenoid, 3 positions, spring centered
75 = double solenoid, 2 external positions, with detent

Spool type, see section 5

Options, see section 8

Spool position monitor:
FI = inductive proximity switch
FV = inductive position switch (double contact)

Electrical signal - only for **FI** version (1):
/NC = electric contact is closed when the valve is de-energized
/NO = electric contact is open when the valve is de-energized

X = without connector, see section 10 for available connectors, to be ordered separately

Voltage code, see section 9

Series number

Seals material see sect. 6,7
- = NBR
PE = FKM

DKE/FI and /FV are always provided with Y drain port
(1) the **FV** inductive position switch provides both NC and NO contacts

5 CONFIGURATIONS AND SPOOLS (representation according to ISO 1219-1)

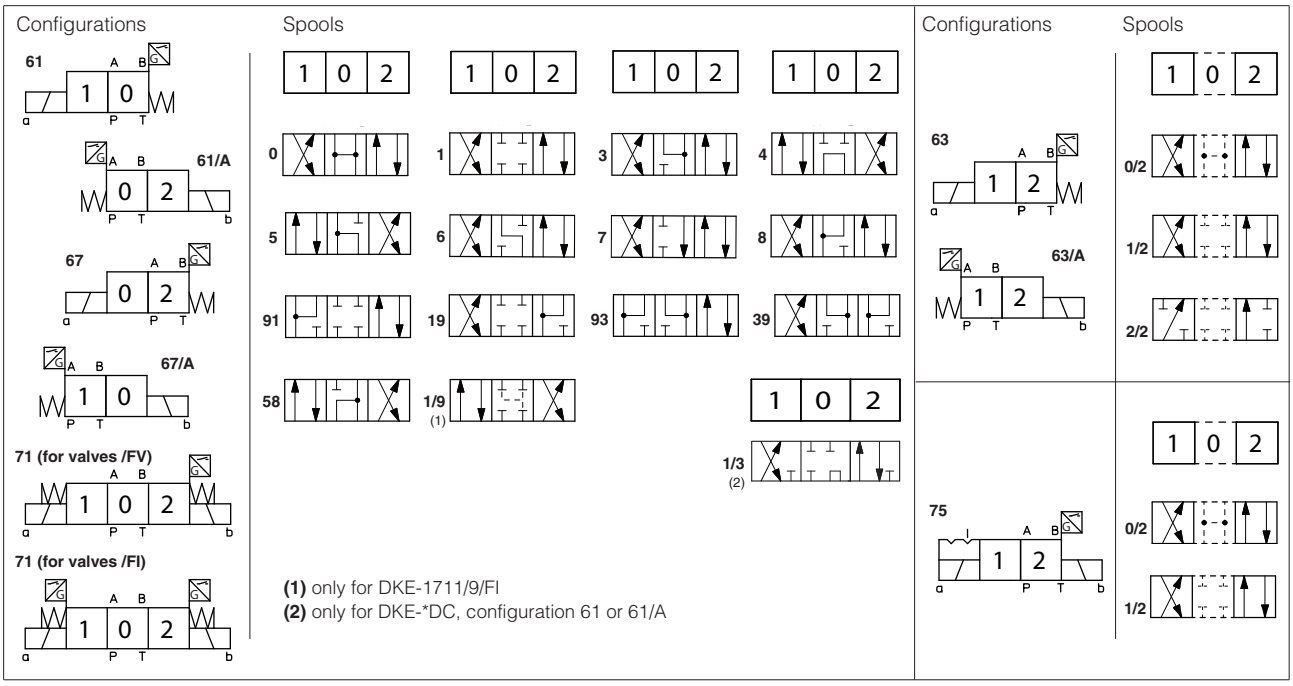

5.1 Configuration for spool */7

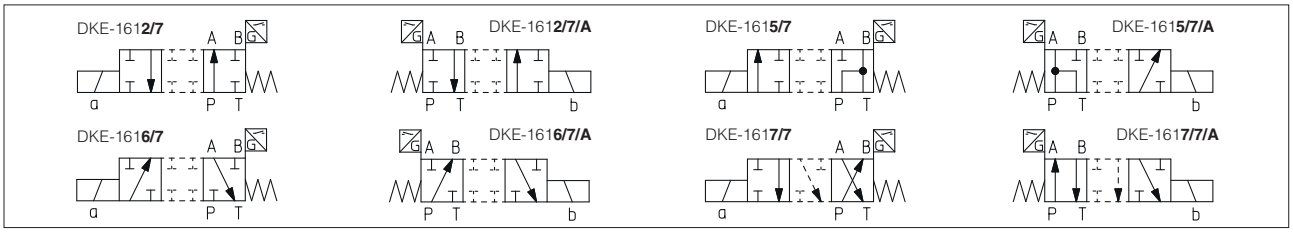

5.2 Special shaped spools for DKE

- spools type **0** and **3** are also available as **0/1** and **3/1** with restricted oil passages in central position, from user ports to tank.
- spools type **1** is also available as **1/1**, properly shaped to reduce the water-hammer shocks during the switching.
- spool type **1/9** has closed center in rest position but it avoids the pressurization of A and B ports due to the internal leakages.
- other types of spools can be supplied on request.

6 MAIN CHARACTERISTICS

Assembly position / location		Any position
Subplate surface finishing		Roughness index Ra 0,4 - flatness ratio 0,01/100 (ISO 1101)
MTTFd values according to EN ISO 13849		150 years, for further details see technical table P007
Compliance		CE to Machine Directive 2006/42/EC. -EC type-examination certificate for safety components **(1)** -ISO 13849 category 1, PLC in high demand mode CE to Low Voltage Directive 2014/35/EU and Machine Directive 2006/42/EC. RoHS Directive 2011/65/EU as last update by 2015/863/EU REACH Regulation (EC) n°1907/2006
Ambient temperature		**Standard** = -30°C ÷ +70°C **/PE** option = -20°C ÷ +70°C
Flow direction		As shown in the symbols of table 3 and 5
Surface protection		Zinc coating with black passivation Coil: zinc nickel coating (DC version) plastic incapsulation (AC version)
Corrosion resistance		Salt spry test (EN ISO 9227) > 200h
Operating pressure	**DHE**	P, A, B = **350 bar** T = **100 bar** (version /FI); **210 bar** (DC solenoid - version /FV); **160 bar** (AC solenoid - version /FV)
	DKE	P, A, B = **350 bar** T = (with Y port not connected to tank) **100 bar** (version /FI); **210 bar** (DC solenoid - version /FV); **120 bar** (AC solenoid - version /FV) T = (with Y port drained to tank) **250 bar**
Rated flow		see diagrams Q/Δp at section 14
Maximum flow	**DHE**	**80 l/min** see section 15
	DKE	**150 l/min** see section 15

(1) The type-examination certificate can be download from www.atos.com

6.1 Coils characteristics

Insulation class	**H** (180°C) for DC coils **F** (155°C) for AC coils Due to the occuring surface temperatures of the solenoid coils, the European standards EN ISO 13732-1 and EN ISO 4413 must be taken into account
Protection degree to DIN EN 60529	**IP 65** (with connectors correctly assembled)
Relative duty factor	100%
Supply voltage and frequency	See electric features 9
Supply voltage tolerance	± 10%
Certification	**cURus** North American standard

7 SEALS AND HYDRAULIC FLUID - for other fluids not included in below table, consult our technical office

Seals, recommended fluid temperature	NBR seals (standard) = -20°C ÷ +80°C, with HFC hydraulic fluids = -20°C ÷ +50°C FKM seals (/PE option) = -20°C ÷ +80°C		
Recommended viscosity	15÷100 mm²/s - max allowed range 2,8 ÷ 500 mm²/s		
Max fluid contamination level	ISO4406 class 20/18/15 NAS1638 class 9, see also filter section at www.atos.com or KTF catalog		
Hydraulic fluid	**Suitable seals type**	**Classification**	**Ref. Standard**
Mineral oils	NBR, FKM	HL, HLP, HLPD, HVLP, HVLPD	DIN 51524
Flame resistant without water	FKM	HFDU, HFDR	ISO 12922
Flame resistant with water	NBR	HFC	

8 OPTIONS

A = Single solenoid valves: solenoid mounted at side of port B. In standard versions the solenoid is mounted at side of port A.
Double solenoid valves DHE/FV(DC), DKE/FV(DC): FV inductive position switch mounted at side of port A. In standard versions the position switch is mounted at side of port B.

WARNING: the manual operation is not permitted for safety valves, than the valve is provided with solenoid blind rings to prevent the access to the manual override. The manual override protected by rubber cup (option /WP) is not available

WARNING: the inobservance of following prescriptions invalidates the certification and may represent a risk for personnel injury
Safety valves must be installed and commissioned only by qualified personnel
Safety valves must not be disassembled
The inductive proximity FI or the inductive position switch FV can be adjusted only by the valve's manufacturer or Atos authorized service centers
Valve's components cannot be interchanged
The valves must operate without switching shocks and spool vibrations

9 ELECTRIC FEATURES

9.1 COILS FOR DHE VALVES

External supply nominal voltage ± 10%	**Voltage code**	Type of connector	Power consumption (2)	Code of spare coil
12 DC	**12 DC**	666 or 667	30 W	COE-12DC
14 DC	**14 DC**			COE-14DC
24 DC	**24 DC**			COE-24DC
28 DC	**28 DC**			COE-28DC
48 DC	**48 DC**			COE-48DC
110 DC	**110 DC**			COE-110DC
125 DC	**125 DC**			COE-125DC
220 DC	**220 DC**			COE-220DC
110/50 AC	**110/50/60 AC**		58 VA (3)	COE-110/50/60AC
115/60 AC	**115/60 AC**		80 VA (3)	COE-115/60AC
230/50 AC	**230/50/60 AC**		58 VA (3)	COE-230/50/60AC
230/60 AC	**230/60 AC**		80 VA (3)	COE-230/60AC
110/50 AC	**110RC**	669	30 W	COE-110RC
120/60 AC				
230/50 AC	**230RC**			COE-230RC
230/60 AC				

(1) In case of 60 Hz voltage frequency the performances are reduced by 10÷15% and the power consumption is 58 VA
(2) Average values based on tests performed at nominal hydraulic condition and ambient/coil temperature of 20°C.
(3) When solenoid is energized, the inrush current is approx 3 times the holding current.

9.2 COILS FOR DKE VALVE

External supply nominal voltage ± 10%	**Voltage code**	Type of connector	Power consumption (2)	Code of spare coil
12 DC	**12 DC**	666 or 667	36 W	CAE-12DC
14 DC	**14 DC**			CAE-14DC
24 DC	**24 DC**			CAE-24DC
28 DC	**28 DC**			CAE-28DC
110 DC	**110 DC**			CAE-110DC
125 DC	**125 DC**			CAE-125 DC
220 DC	**220 DC**			CAE-220DC
110/50/60 AC	**110/50/60 AC**		100 VA (3)	CAE-110/50/60AC (1)
230/50/60 AC	**230/50/60 AC**			CAE-230/50/60AC (1)
115/60 AC	**115/60 AC**		130 VA (3)	CAE-115/60AC
230/60 AC	**230/60 AC**			CAE-230/60AC
110/50/60 AC	**110 DC**	669	36 W	CAE-110DC
230/50/60 AC	**220 DC**			CAE-220DC

(1) In case of 60 Hz voltage frequency the performances are reduced by 10÷15% and the power consumption is 90 VA
(2) Average values based on tests performed at nominal hydraulic condition and ambient/coil temperature of 20°C.
(3) When solenoid is energized, the inrush current is approx 3 times the holding current.

10 COILS ELECTRIC CONNECTORS - according to din 43650 (to be ordered separately)

666, 667 (for AC or DC supply)	**669** (for AC supply)	**CONNECTOR WIRING**		
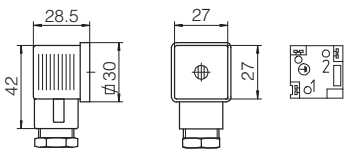	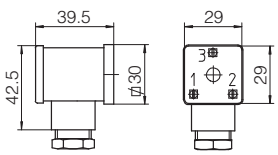	**666, 667** 1 = Positive ⊕ 2 = Negative ⊖ ⊕ = Coil ground		**669** 1,2= Supply voltage VAC 3 = Coil ground
		SUPPLY VOLTAGES		
		666 All voltages	**667** 24 AC or DC 110 AC or DC 220 AC or DC	**669** 110/50 AC 110/60 AC 230/50 AC 230/60 AC

11 TECHNICAL CHARACTERISTICS OF INDUCTIVE PROXIMITY AND POSITION SWITCHES

Type of switch		**/FI** proximity sensor	**/FI** scheme	**/FV** position switch	**/FV** scheme
Supply voltage	[V]	10÷30	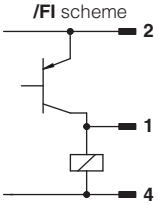	20÷32	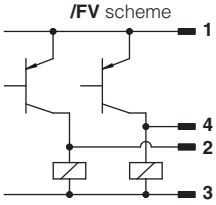
Ripple max	[%]	≤ 20		≤ 10	
Max current	[mA]	200		400	
Max peak pressure	[bar]	100		400	
Mechanical life		virtually infinite		virtually infinite	
Switch logic		PNP		PNP	
			1 output signal **2** supply +24 VDC **4** GND	**1** supply +24 VDC **2** output signal	**3** GND **4** output signal

12 CONNECTING SCHEMES OF INDUCTIVE PROXIMITY AND POSITION SWITCHES - FI and FV sensor's connector are always supplied with the valve

DHE/FI single solenoid / double solenoid (dotted line)	**/FV (all valves)** single solenoid	**/FV (all valves)** double solenoid	**DKE/FI** single solenoid	**DKE/FI** double solenoid
Connector type **345** IP65	Connector type **ZBE-06** IP65	Connector type **ZBE-06** IP65	Connector type **666** IP65	Connector type **664** IP65
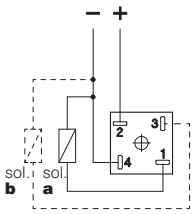	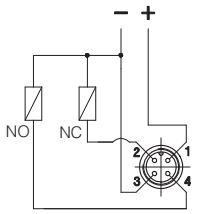	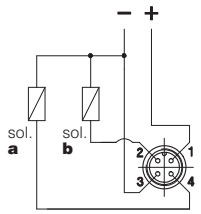	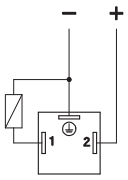	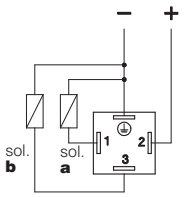
1 =output signal 2 =supply +24 VDC 3 = output signal for double solenoid 4 = GND	1 = supply +24 VDC 2 = output signal NC 3 = GND 4 = output signal NO	1 = supply +24 VDC 2 = output signal sol.**b** 3 = GND 4 = output signal sol.**a**	1 = output signal S 2 = supply +24 VDC ⏚ = GND	1 = output signal sol.**a** 2 = supply +24 VDC 3 = output signal sol.**b** ⏚ = GND

NOTE: the /FI proximity and /FV position switch are not provided with a protective earth connection

13 STATUS OF OUTPUT SIGNAL

13.1 Signal status for FI versions

Signal status for standard version

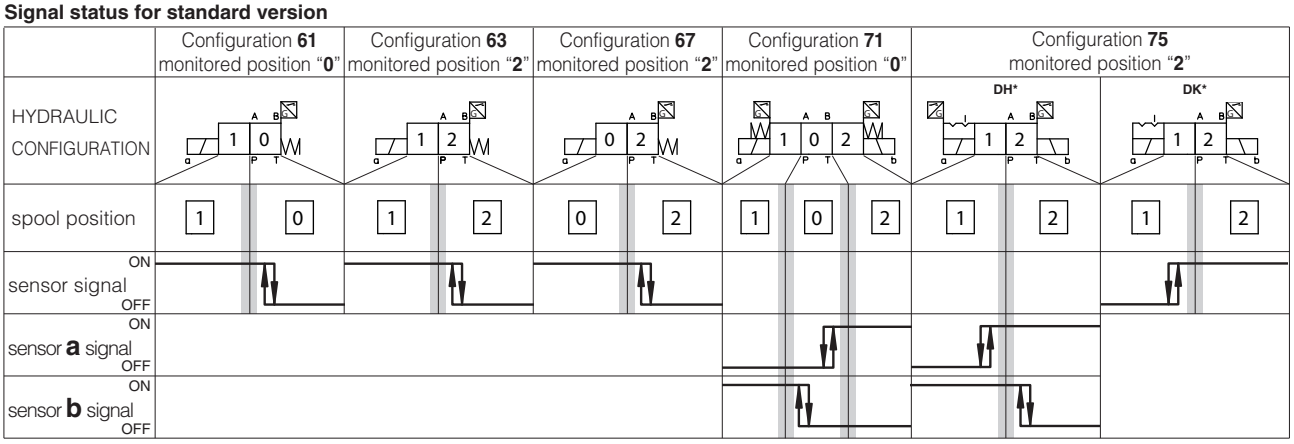

Diagrams show the behaviour of the output signal for inductive switches type **FI/NO**.
For inductive switches type **FI/NC** option the behaviour is opposite (high level signal instead of low level signal and viceversa)

Signal status for option /A

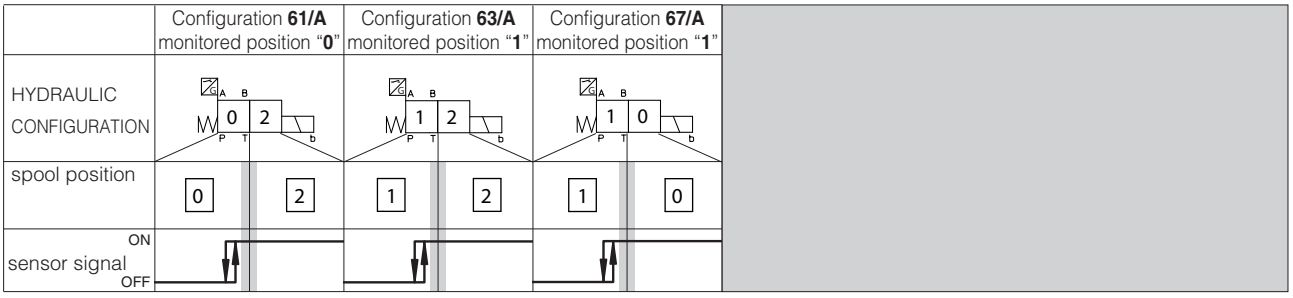

Diagrams show the behaviour of the output signal for inductive switches type **FI/NO**.
For inductive switches type **FI/NC** option the behaviour is opposite (high level signal instead of low level signal and viceversa)

13.2 Signal status for FV versions

Signal status for standard version

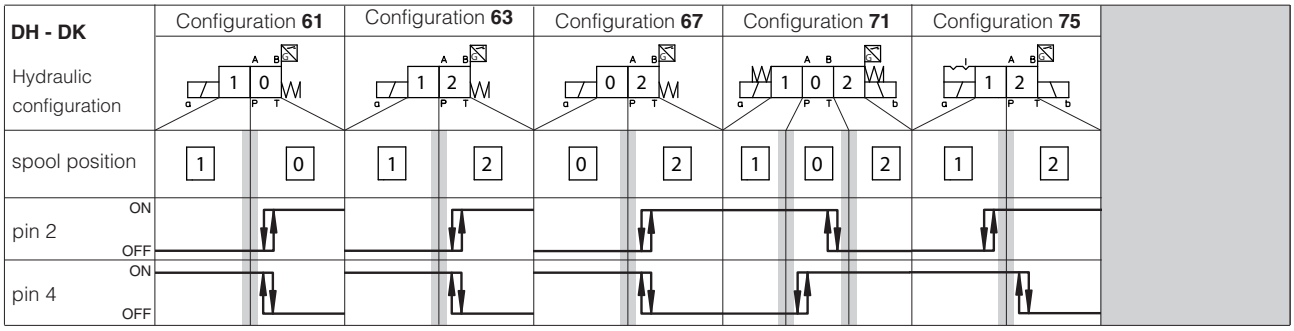

Note: FV position switch can be electrically wired by the customer as NO or NC and then the status of the output signal will be in accordance to the selected configuration

= intermediate spool position corresponding to the hydraulic configuration change

Signal status for option /A

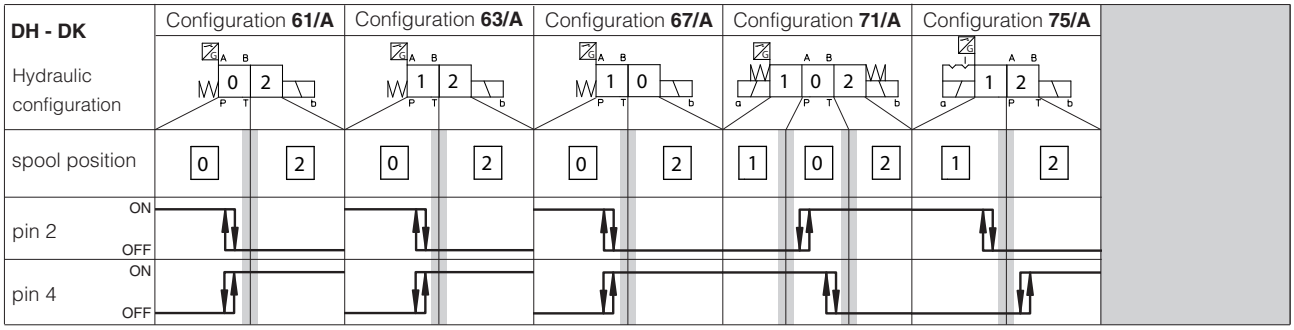

Note: FV position switch can be electrically wired by the customer as NO or NC and then the status of the output signal will be in accordance to the selected configuration

= intermediate spool position corresponding to the hydraulic configuration change

14 Q/ΔP DIAGRAMS based on mineral oil ISO VG 46 at 50°C

DHE

Spool type \ Flow direction	P→A	P→B	A→T	B→T	P→T
0, 0/1	A	A	C	C	D
1, 1/1, 1/9	D	C	C	C	
3, 3/1	D	D	A	A	
4, 4/8, 5, 5/1, 49, 58, 58/1, 94	F	F	G	C	E
1/2, 0/2	D	D	D	D	
6, 7, 16, 17	D	D	D	D	
8	A	A	E	E	
2	D	D			
2/2	F	F			
09, 19, 90, 91	E	E	D	D	
39, 93	F	F	G	G	
2/7	E		E		
5/7	D	E		C	F
6/7		D	E		
7/7		F	F	F	

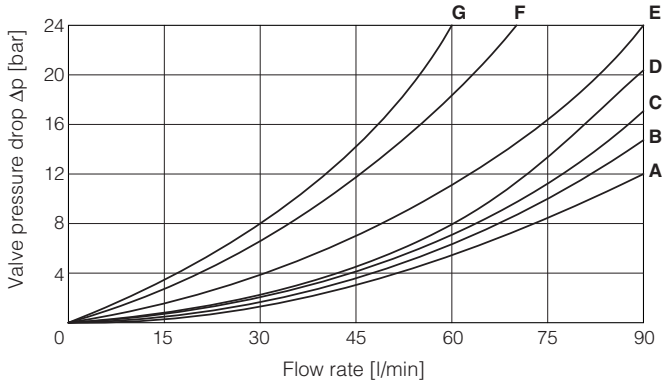

DKE

Spool type \ Flow direction	P→A	P→B	A→T	B→T	P→T	B→A
0, 0/1, 0/2, 2/2	A	A	B	B		
1, 1/1, 1/9, 6, 8	A	A	D	C		
3, 3/1, 7	A	A	C	D		
4	B	B	B	B	F	
5, 58	A	B	C	C	G	
1/2	B	C	C	B		
19, 91	E	E	G	G		H
39, 93	F	F	G	G		H
2/7	G			H		
5/7	D			C	G	
6/7		G	H			
7/7		H	H	H		

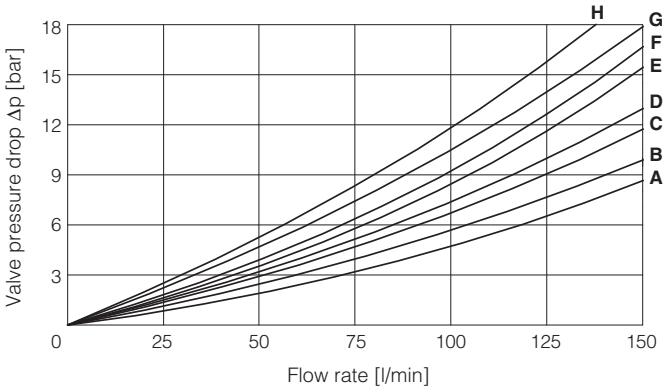

15 **OPERATING LIMITS** based on mineral oil ISO VG 46 at 50°C

The diagrams have been obtained with warm solenoids and power supply at lowest value (V_{nom} - 10%). The curves refer to application with symmetrical flow through the valve (i.e. P→A and B→T). In case of asymmetric flow and if the valves have the devices for controlling the switching times the operating limits must be reduced.

DHE

Curve	Spool type AC	Spool type DC
A	1,1/2, 8	0, 0/1, 1, 1/2, 3, 8
B	0, 0/1, 0/2, 1/1, 1/9, 3	0/2, 1/1, 6, 7, 1/9, 19
C	3, 3/1, 6, 7	3/1, 4, 4/8, 5, 5/1, 16, 17, 19, 39, 49, 58, 58/1, 09, 90, 91, 93, 94
D	4, 4/8, 5, 5/1, 16, 17, 19, 39, 58, 58/1, 09, 90, 91, 93, 94	2, 2/2
E	2, 2/2	-
F	2/7, 6/7	2/7, 6/7
G	5/7	5/7
H	7/7	7/7

DHE - AC

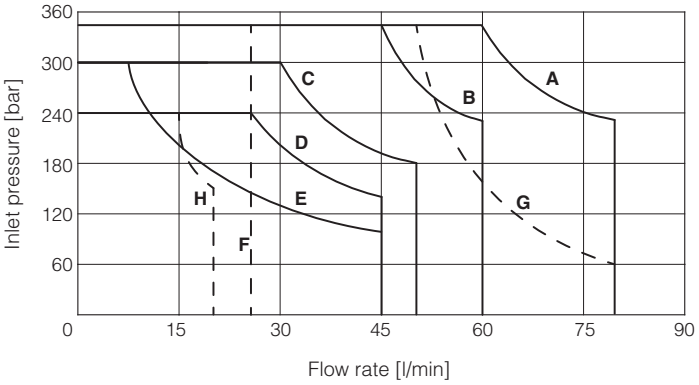

DHE - DC

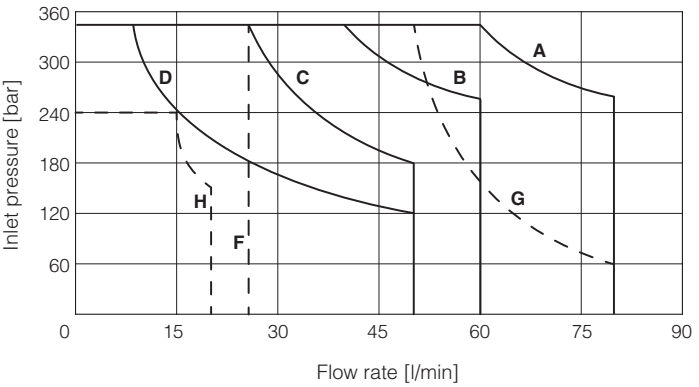

DKE

Curve	Spool type AC	Spool type DC
A	0/1	0, 0/1, 1, 1/1, 3, 3/1, 1/2, 0/2, 8
B	4, 5, 19, 91	6, 7
C	0, 1/1, 3, 3/1	19, 91
D	1, 1/2, 0/2	4, 5
E	6, 7, 8, 2/2	2/2
F	2/7	2/7
G	5/7	5/7
H	6/7	6/7
I	7/7	7/7

DKE - AC

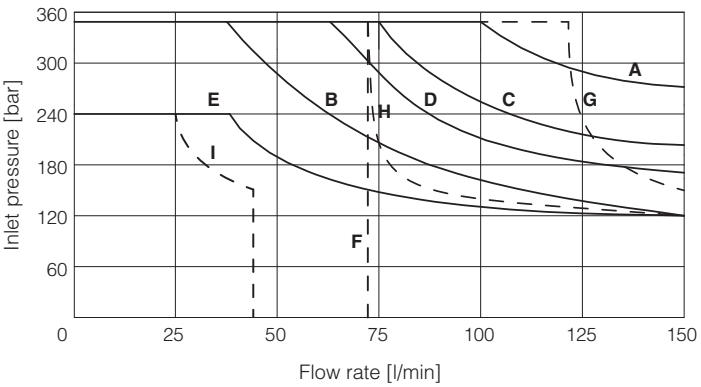

DKE - DC

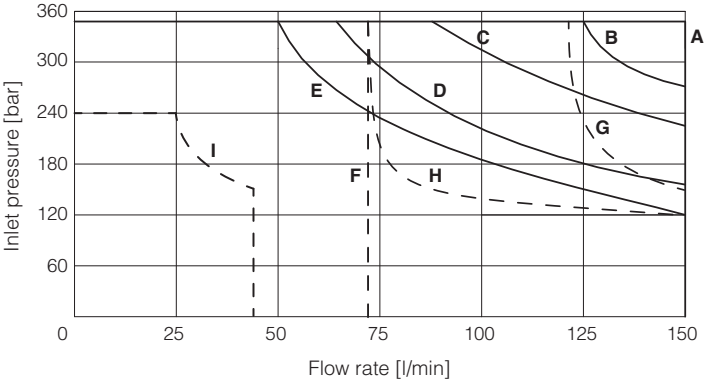

16 DIMENSIONS FOR DHE SOLENOID SAFETY VALVES [mm]

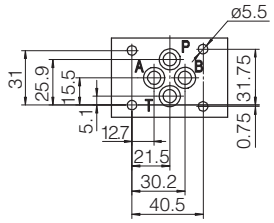

valve's bottom view

ISO 4401: 2005
Mounting surface: 4401-03-02-0-05
Fastening bolts:
4 socket head screws M5x30 class 12.9
Tightening torque = 8 Nm
Seals: 4 OR 108
Ports P,A,B,T: Ø = 7.5 mm (max)

P = PRESSURE PORT
A, B = USE PORT
T = TANK PORT

option /A
Single solenoid valves: solenoid mounted at side of port B.
Double solenoid valves DHE/FV(DC): FV inductive position switch mounted at side of port A

DHE-06*/FI (DC)
DHE-07*/FI (DC) dotted line

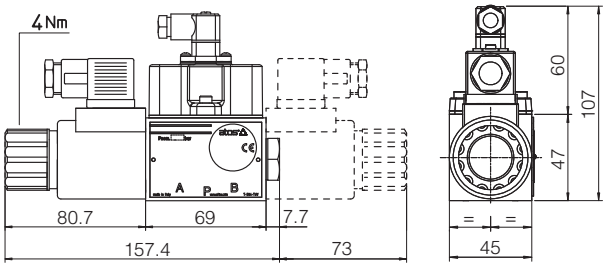

Mass:
kg 1,85 (one solenoid)
kg 2,1 (two solenoids)

DHE-06*/FI (AC)
DHE-07*/FI (AC) dotted line

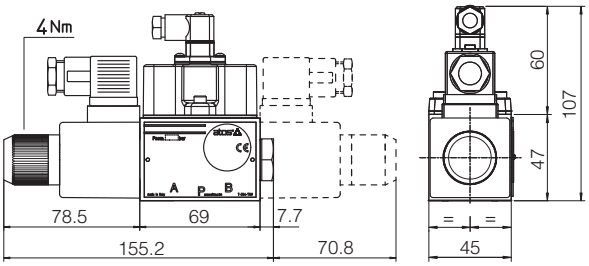

Mass:
kg 1,85 (one solenoid)
kg 2,1 (two solenoids)

DHE-06*/FV (DC)

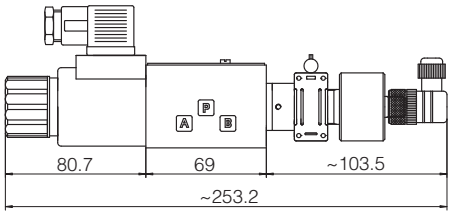

Mass: kg 1,95

DHE-06*/FV (AC)

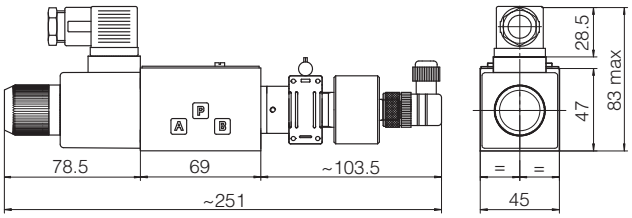

Mass: kg 1,8

DHE-07*/FV (DC)

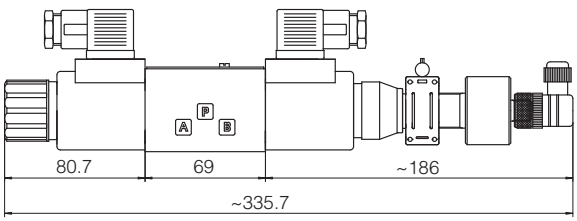

Mass: kg 2,2

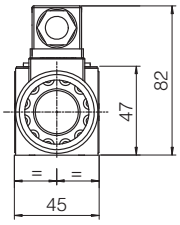

17 DIMENSIONS OF DKE SOLENOID SAFETY VALVES [mm]

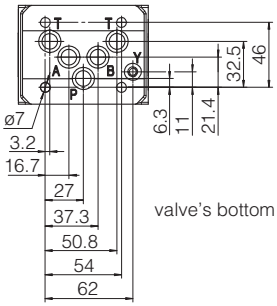

valve's bottom view

ISO 4401: 2005
Mounting surface:
4401-05-05-0-05
(without port X)
Fastening bolts:
4 socket head screws M6x40 class 12.9
Tightening torque = 15 Nm
Seals: 5 OR 2050. 1 OR 108
Ports P,A,B,T: Ø = 11.5 mm (max)
Ports Y: Ø = 5 mm

P = PRESSURE PORT
A, B = USE PORT
T = TANK PORT
Y = DRAIN PORT

option /A
Single solenoid valves: solenoid mounted at side of port B.
Double solenoid valves DKE/FV(DC): FV inductive position switch mounted at side of port A

DKE-16*/FI (DC)
DKE-17*/FI (DC) dotted line

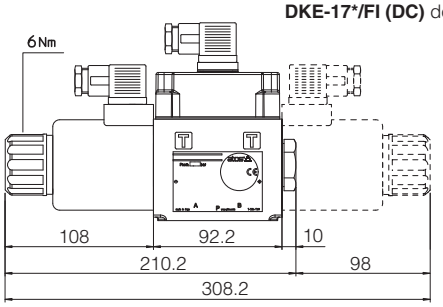

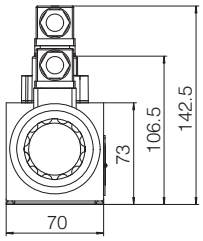

Mass:
kg 4,4 (one solenoid)
kg 5,8 (two solenoids)

DKE-16*/FI (AC)
DKE-17*/FI (AC) dotted line

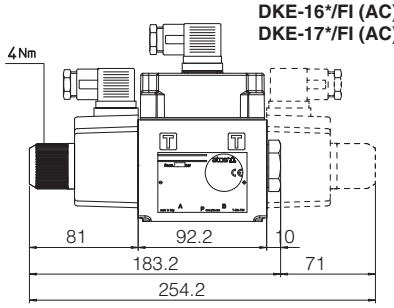

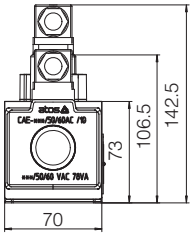

Mass:
kg 3,7 (one solenoid)
kg 4,4 (two solenoids)

DKE-16*/FV (DC)

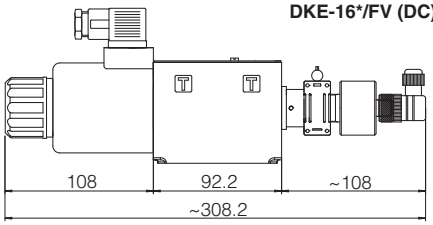

Mass: kg 4,4

DKE-17*/FV (DC)

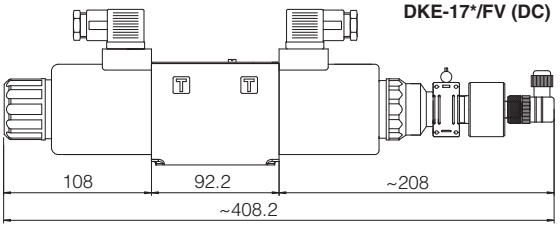

Mass: kg 5,9

DKE-16*/FV (AC)

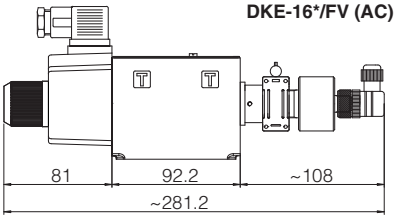

Mass: kg 3,8

Safety modular valves with spool position monitoring

On-off, direct, conforming to Machine Directive 2006/42/EC - certified by

SAFETY CERTIFIED

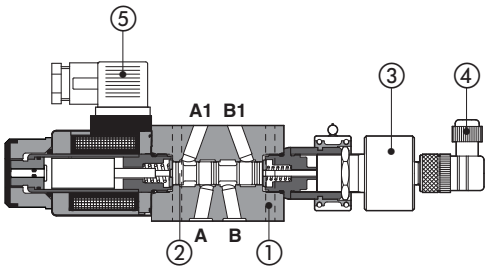

HF-0611/FV

① Body
② Spool
③ Inductive position switch **FV**
④ Sensor electric connector (supplied with the valve)
⑤ Coil electric connector (to be ordered separately)

HF are spool type, direct operated solenoid valves in modular execution, normally used for safety functions to shut-off or to by-pass the hydraulic user lines.
They are provided with **FV** inductive position switch for spool position monitoring, **CE** marked and certified by **TÜV** in accordance with safety requirements of Machine Directive 2006/42/EC.

The modular execution permits to make compact functional circuits, by the stack mounting with other modular valves and solenoid valves size 06.

Applications
Syncro press brakes, vertical presses, plastic injection, ceramic presses.

Certification
The **TÜV** certificate can be downloaded from www.atos.com, catalog on line, technical information section.

Mounting Surface: **ISO 4401 size 06**
Max flow: **60 l/min**
Max pressure: **350 bar**

1 MODEL CODE

HF-0	61	1	/	A	/	FV	-	E	X	24DC	**	/*

HF-0: Modular directional valve size 06

61: **Valve configuration**, see section 2
61 = single solenoid, central plus external position, spring centered
67 = single solenoid, central plus external position, spring offset

1: **Spool type**: **1**, **3**, **4** see section 2

A: **Options**:
A = solenoid mounted at side of port B
B = orientation of coil and proximity connectors rotated of 180°

FV: **Optional spool position monitor**:
FV = inductive position switch (only for HF-0611, HF-0614, HF-0673)

E: **E** = solenoid OE for AC and DC supply

X: **X** = without connector
See section 6 for available connectors, to be ordered separately

24DC: **Voltage code**, see section 7

******: Series number

/*: Seals material, see section 4:
- = NBR
PE = FKM

2 CONFIGURATION

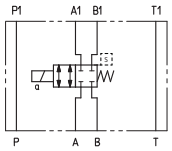

HF-0611/FV

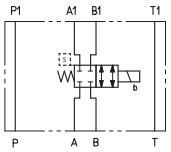

HF-0611/AFV

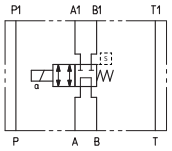

HF-0614/FV

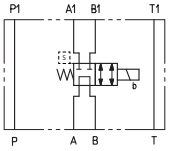

HF-0614/AFV

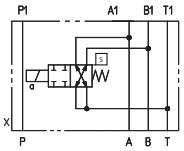

HF-0673/FV

3 MAIN CHARACTERISTICS

Assembly position / location	Any position
Subplate surface finishing	Roughness index Ra 0,4 - flatness ratio 0,01/100 (ISO 1101)
MTTFd values according to EN ISO 13849	150 years, for further details see technical table P007
Compliance	CE to Machine Directive 2006/42/EC. -EC type-examination certificate for safety components **(1)** -ISO 13849 category 1, PLC in high demand mode CE to Low Voltage Directive 2014/35/EU and Machine Directive 2006/42/EC. RoHS Directive 2011/65/EU as last update by 2015/863/EU REACH Regulation (EC) n°1907/2006
Ambient temperature	**Standard** = -30°C ÷ +70°C **/PE** option = -20°C ÷ +70°C
Flow direction	As shown in the symbols of table 2
Operating pressure	Ports P,A,B: **350** bar; Port T: **210** bar (DC solenoid); **160** bar (AC solenoid)
Maximum flow	**60 l/min**

(1) The type-examination certificate can be download from www.atos.com

3.1 Coils characteristics

Insulation class	**H** (180°C) for DC coils **F** (155°C) for AC coils Due to the occuring surface temperatures of the solenoid coils, the European standards EN ISO 13732-1 and EN ISO 4413 must be taken into account
Protection degree to DIN EN 60529	**IP 65** (with mating connectors correctly assembled)
Relative duty factor	100%
Supply voltage and frequency	See electric features 7
Supply voltage tolerance	± 10%
Certification	**cURus** North American standard

4 SEALS AND HYDRAULIC FLUID - for other fluids not included in below table, consult our technical office

Seals, recommended fluid temperature	NBR seals (standard) = -20°C ÷ +80°C, with HFC hydraulic fluids = -20°C ÷ +50°C FKM seals (/PE option) = -20°C ÷ +80°C		
Recommended viscosity	15÷100 mm²/s - max allowed range 2,8 ÷ 500 mm²/s		
Max fluid contamination level	ISO4406 class 20/18/15 NAS1638 class 9, see also filter section at www.atos.com or KTF catalog		
Hydraulic fluid	**Suitable seals type**	**Classification**	**Ref. Standard**
Mineral oils	NBR, FKM	HL, HLP, HLPD, HVLP, HVLPD	DIN 51524
Flame resistant without water	FKM	HFDU, HFDR	ISO 12922
Flame resistant with water	NBR	HFC	

5 OPTIONS

A = Solenoid mounted at side of port B. In standard versions, solenoid is mounted at side of port A.
B = Orientation of coil and proximity connectors rotated of 180°

the manual operation is not permitted for safety valves, than they are provided with solenoid blind rings to prevent the access to the manual override.

6 ELECTRIC CONNECTORS ACCORDING TO DIN 43650 (to be ordered separately)

666, 667 (for AC or DC supply)	**669** (for AC supply)	**CONNECTOR WIRING**	
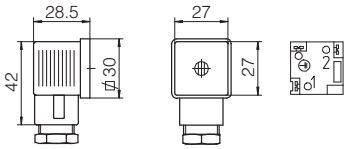	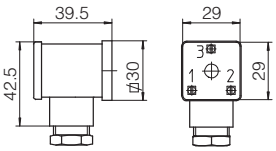	**666, 667** 1 = Positive ⊕ 2 = Negative ⊖ ⊕ = Coil ground	**669** 1,2 = Supply voltage VAC 3 = Coil ground
		SUPPLY VOLTAGES	
		666	**667** / **669**
		All voltages	**667**: 24 AC or DC, 110 AC or DC, 220 AC or DC **669**: 110/50 AC, 110/60 AC, 230/50 AC, 230/60 AC

Note: for electronic connectors type **E-SD**, see tab. K500

7 ELECTRIC FEATURES

External supply nominal voltage ± 10%	**Voltage code**	Type of connector	Power consumption (2)	Code of spare coil
12 DC	**12 DC**	666 or 667	30 W	COE-12DC
14 DC	**14 DC**			COE-14DC
24 DC	**24 DC**			COE-24DC
28 DC	**28 DC**			COE-28DC
48 DC	**48 DC**			COE-48DC
110 DC	**110 DC**			COE-110DC
125 DC	**125 DC**			COE-125DC
220 DC	**220 DC**			COE-220DC
110/50 AC	**110/50/60 AC**		58 VA (3)	COE-110/50/60AC (1)
230/50 AC	**230/50/60 AC**			COE-230/50/60AC (1)
115/60 AC	**115/60 AC**		80 VA (3)	COE-115/60AC
230/60 AC	**230/60 AC**			COE-230/60AC
110/50 AC - 120/60 AC	**110 RC**	669	30 W	COE-110RC
230/50 AC - 230/60 AC	**230 RC**			COE-230RC

(1) Coil can be supplied also with 60 Hz of voltage frequency: in this case the performances are reduced by 10 ÷15% and the power consumption is 52 VA.
(2) Average values based on tests preformed at nominal hydraulic condition and ambient/coil temperature of 20°C.
(3) When solenoid is energized, the inrush current is approx 3 times the holding current.

8 TECHNICAL CHARACTERISTICS OF FV INDUCTIVE POSITION SWITCH

Type of switch		contactless inductive position switch with integrated amplifier
Supply voltage	[V]	20÷32
Ripple max	[%]	≤ 10
Max current	[mA]	400
Reaction time	[ms]	15
Max peak pressure	[bar]	400
Mechanical life		virtually infinite
Switch logic		PNP

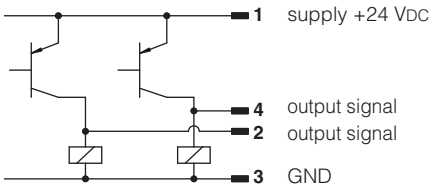

9 CONNECTING SCHEME OF FV INDUCTIVE POSITION SWITCH

single solenoid

Connector type **ZBE-06**
(supplied with the valve)

1 = supply +24 VDC
2 = output signal NC
3 = GND
4 = output signal NO

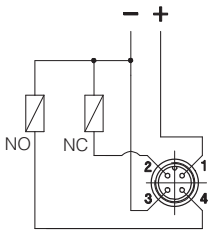

Note: the /FV position switch is not provided with a protective earth connection

10 STATUS OF OUTPUT SIGNAL FOR MODULAR VALVES WITH /FV INDUCTIVE POSITION SWITCH

Hydraulic configuration	Configuration **611**	Configuration **614**	Configuration **673**
spool position			
pin 2 (ON / OFF)			
pin 4 (ON / OFF)			

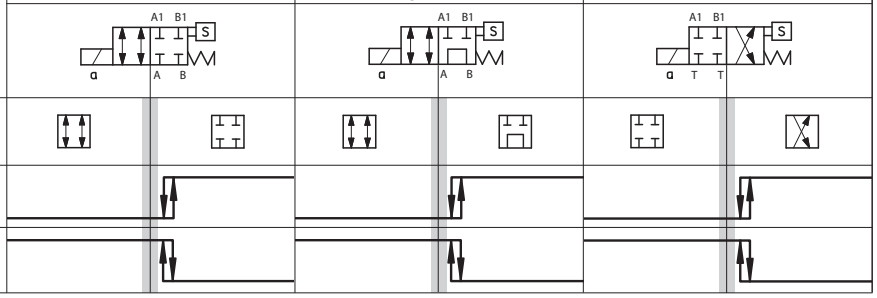

Note: FV position switch can be electrically wired by the customer as NO or NC and then the status of the output signal will be in accordance to the selected configuration

= intermediate spool position corresponding to the hydraulic configuration change

11 Q/ΔP DIAGRAMS based on mineral oil ISO VG 46 at 50°C

Valve type \ Flow direction	A→A1	B→B1	A→B	A1→T	B1→T
HF-0611	1	2			
HF-0614	1	2	3		
HF-0673	3	3		4	4

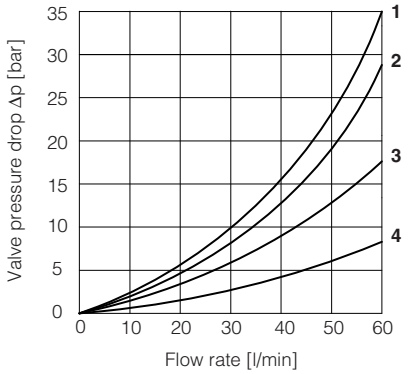

12 OPERATING LIMITS based on mineral oil ISO VG 46 at 50°C

The diagrams have been obtained with warm solenoids and power supply at lowest value (V_{nom} - 10%)

Valve type	Curve
HF-0611	**A**
HF-0614, HF-0673	**B**

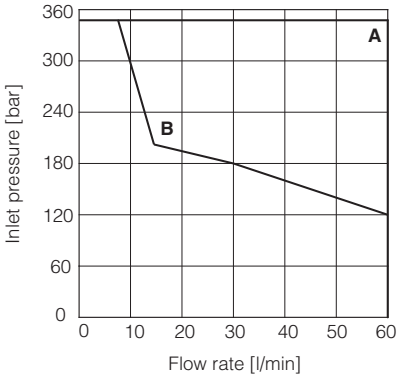

13 DIMENSIONS [mm]

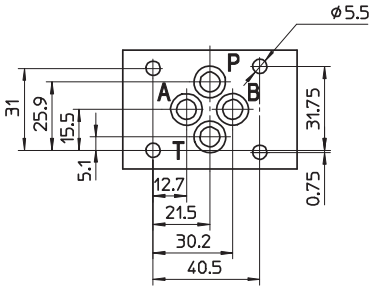

ISO 4401: 2005
Mounting surface: 4401-03-02-0-05
Seals: 4 OR 108
Ports P, A, B, T: Ø = 7.5 mm (max).

HF-0611/FV
HF-0614/FV
HF-0673/FV

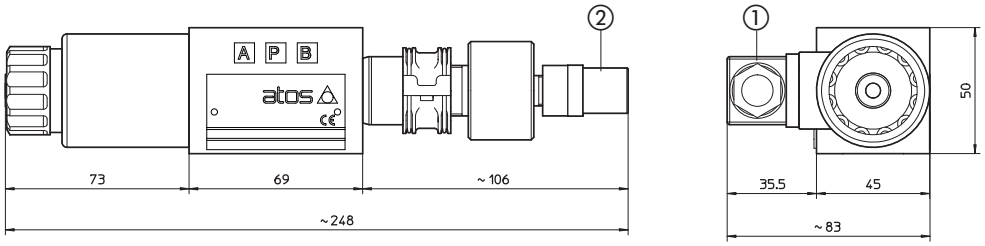

① = Power supply connector code 666, 667 or 669, to be ordered separately

② = Inductive position switch connector code ZBE-06, supplied with the valve

Safety directional valves with spool position monitoring

On-off, pilot operated, conforming to Machine Directive 2006/42/EC - certified by

CE

SAFETY CERTIFIED

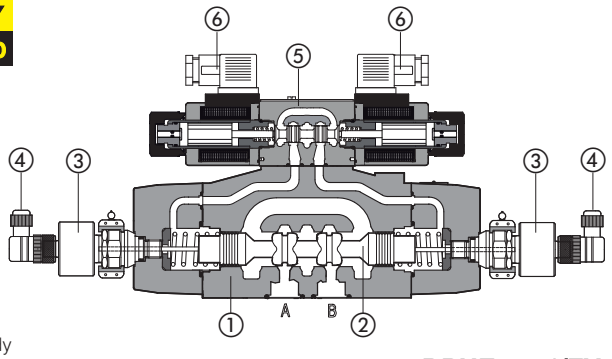

DPHE-271*/FV

① Main body
② Main spool
③ Inductive position switch **FV**
④ Sensor electric connector (supplied with the valve)
⑤ Pilot solenoid valve
⑥ Coil electric connector (to be ordered separately)

Pilot operated safety directional valves with main spool position monitoring, **CE** marked and certified by **TÜV** in accordance with safety requirements of Machine Directive 2006/42/EC.

DPHE high performances, for AC and DC supply, solenoid pilot valve ⑤ type DHE with cURus certified solenoids, see tech. table E015

The valves are equipped with **FV** inductive position switch for the main spool position monitoring, see section 9 for sensor's technical characteristics.

Certification

The **TÜV** certificate can be downloaded from www.atos.com, catalog on line, technical information section.

Mounting surface: **ISO 4401, size 10, 16, 25**
Max flow: **160, 300, 700 l/min**
Max pressure: **350 bar**

1 MODEL CODE

DPH	E	-	2	71	1	/	A	/	FV	X	24DC	**	/	*

Pilot operated directional control valve

Solenoid pilot valve:
E = DHE for AC and DC supply, high performances with **cURus** certified solenoids

Valve size, ISO 4401:
1 = 10 **2** = 16 **4** = 25

Valve configuration, see section 2:
61 = single solenoid, center plus external position, spring centered
63 = single solenoid, 2 external positions, spring offset
67 = single solenoid, center plus external position, spring offset
71 = double solenoid, 3 positions, spring centered
75 = double solenoid, 2 external positions, with detent

Spool type, see section 2

Hydraulic options, see section 5
A, **D**, **E**, **R**
Optional devices for main spool switching control, see section 6
H, **H9**, **L9**

Spool position monitor
FV = inductive position switch (double contact)

X = without connector, see section 8 for available connectors, to be ordered separately

Voltage code, see section 7

Series number

Seals material see sect. 3,4
- = NBR
PE = FKM

Notes:
FV = inductive position switch providing both NO and NC contacts to be wired on the electric connector
The FV inductive position switch is directly connected to the valve main spool
In pilot operated valves only the main spool position is monitored; the pilot solenoid valve is not monitored

2 CONFIGURATIONS and SPOOLS (representation according to ISO 1219-1)

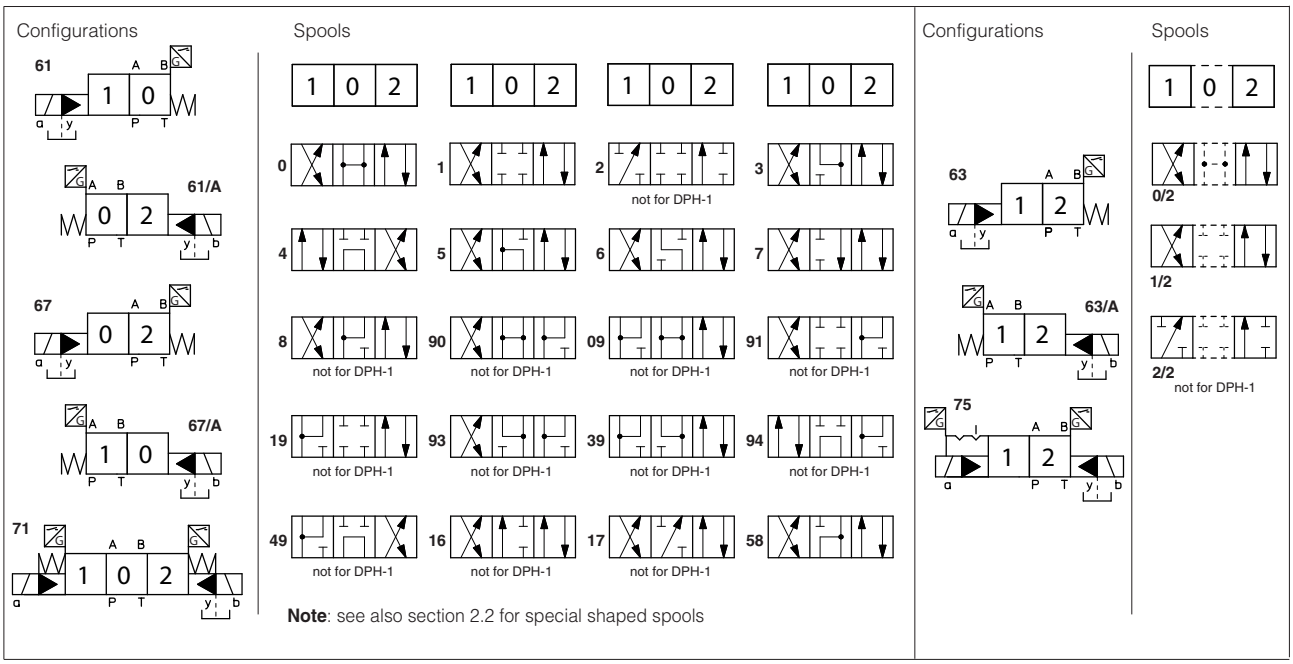

2.1 Standard spools availability

- DPHE-1 are available only with spools **0, 0/2, 1, 1/2, 3, 4, 5, 58, 6, 7**
- DPHE-2 and DPHE-4 are available with all spools shown in the above table

2.2 Special shaped spools

- spools type **0** and **3** are also available as **0/1** and **3/1** with restricted oil passages in central position, from user ports to tank.
- spools type **1, 4, 5, 58, 6** and **7** are also available as **1/1, 4/8, 5/1, 58/1, 6/1** and **7/1** that are properly shaped to reduce water-hammer shocks during the switching.

2.3 Special spool availability

Valve size	special shaped spool							
	0/1	3/1	1/1	4/8	5/1	58/1	6/1	7/1
DPHE-1	•	•		•				
DPHE-2, DPHE-4	•	•	•	•	•	•	•	•

3 MAIN CHARACTERISTICS

Assembly position / location	Any position
Subplate surface finishing	Roughness index Ra 0,4 - flatness ratio 0,01/100 (ISO 1101)
MTTFd values according to EN ISO 13849	75 years, for further details see technical table P007
Compliance	CE to Machine Directive 2006/42/EC. -EC type-examination certificate for safety components **(1)** -ISO 13849 category 1, PLC in high demand mode CE to Low Voltage Directive 2014/35/EU and Machine Directive 2006/42/EC. RoHS Directive 2011/65/EU as last update by 2015/863/EU REACH Regulation (EC) n°1907/2006
Ambient temperature	**Standard** = -30°C ÷ +70°C **/PE** option = -20°C ÷ +70°C
Flow direction	As shown in the symbols of table 2
Operating pressure	P, A, B, X = **350 bar** (for pilot pressure see also option /L9 at section 6) T = **250 bar** for external drain (standard) T with internal drain (option /D) = **210 bar** DPHE (DC); **160 bar** DPHE (AC) Y = 0 bar Minimum pilot pressure for correct operation is **8 bar**
Maximum flow	DPHE-1: **160 l/min;** DPHE-2: **300 l/min;** DPHE-4: **700 l/min** (see Q/Δp diagrams at section 12 and operating limits at section 13)

(1) The type-examination certificate can be download from www.atos.com

3.1 Coils characteristics

Insulation class	**H** (180°C) for DC coils **F** (155°C) for AC coils Due to the occuring surface temperatures of the solenoid coils, the European standards EN ISO 13732-1 and EN ISO 4413 must be taken into account
Protection degree to DIN EN 60529	**IP 65** (with connectors correctly assembled)
Relative duty factor	100%
Supply voltage and frequency	See electric features 7
Supply voltage tolerance	± 10%
Certification	**cURus** North American standard

4 SEALS AND HYDRAULIC FLUID - for other fluids not included in below table, consult our technical office

Seals, recommended fluid temperature	NBR seals (standard) = -20°C ÷ +80°C, with HFC hydraulic fluids = -20°C ÷ +50°C FKM seals (/PE option) = -20°C ÷ +80°C		
Recommended viscosity	15÷100 mm²/s - max allowed range 2,8 ÷ 500 mm²/s		
Max fluid contamination level	ISO4406 class 20/18/15 NAS1638 class 9, see also filter section at www.atos.com or KTF catalog		
Hydraulic fluid	**Suitable seals type**	**Classification**	**Ref. Standard**
Mineral oils	NBR, FKM	HL, HLP, HLPD, HVLP, HVLPD	DIN 51524
Flame resistant without water	FKM	HFDU, HFDR	ISO 12922
Flame resistant with water	NBR	HFC	

5 HYDRAULIC OPTIONS

5.1 option /A = Solenoid mounted at side of port A of main body (only for single solenoid valves)
In standard version the solenoid is mounted at side of port B
For sensor position, see sect 16

5.2 option /D = Internal drain (standard configuration is external drain)

5.3 option /E = External pilot pressure (standard configuration is internal pilot pressure)

5.4 option /R = Pilot pressure generator (4 bar on port P - not for DPH*-1)
The device **/R** generates an additional pressure drop, in order to ensure the minimum pilot pressure, for correct operation of the valves with internal pilot and fitted with spools type **0, 0/1, 4, 4/8, 5, 58, 09, 90, 94, 49.**
The device **/R** has to be fitted when the pressure drop in the valve, verified on flow versus pressure diagrams, is lower than the minimum pilot pressure value.

Pressure drop through the pilot pressure generator /R

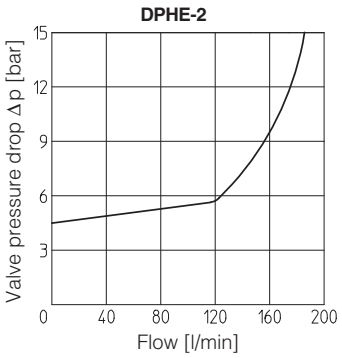

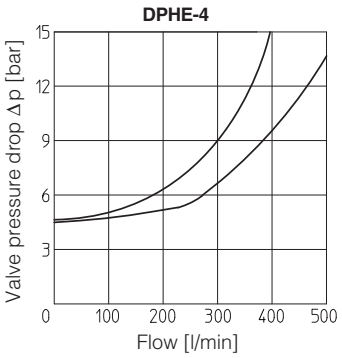

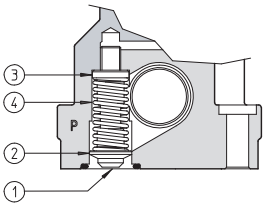

① Flapper-guide ③ Spring stop-washer
② Flapper ④ Spring

Ordering code of spare pilot pressure generator

R/DP	-	*
Pilot pressure generator		Size: **2** for DPHE-2 **4** for DPHE-4

WARNING: the manual operation is not permitted for safety valves, than the valve is provided with solenoid blind rings to prevent the access to the manual override. The manual override protected by rubber cup (option /WP) is not available

WARNING: the inobservance of following prescriptions invalidates the certification and may represent a risk for personnel injury
Safety valves must be installed and commissioned only by qualified personnel
Safety valves must not be disassembled
The inductive position switch FV can be adjusted only by the valve's manufacturer or Atos authorized service centers
Valve's components cannot be interchanged
The valves must operate without switching shocks and spool vibrations

6 DEVICES FOR MAIN SPOOL SWITCHING CONTROL

Following options are suggested to reduce the hydraulic shocks at the valve operation

6.1 option /H = Adjustable chokes (meter-out to the pilot chambers of the main valve)

6.2 option /H9 = Adjustable chokes (meter-in to the pilot chambers of the main valve)

6.3 option /L9 = Only for DP-2 and DP-4: plug with calibrated restictor in P port of pilot valve, suggested in case of pilot pressure higher than 210 bar or to limit the hydraulics shocks caused by the fast main spool switching

Plug code:
PLUG-12A ø1,2 mm for DP-2
PLUG-15A ø1,5 mm for DP-4

FUNCTIONAL SCHEME (config. 71)
example of switching control options

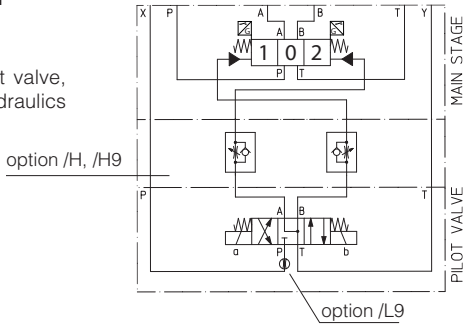

7 COIL VOLTAGE

Valve code	External supply nominal voltage ± 10%	**Voltage code**	Type of connector	Power consumption (2)	Code of spare coil DHE
DPHE	12 DC	**12 DC**	666 or 667	30 W	COE-12DC
	14 DC	**14 DC**			COE-14DC
	24 DC	**24 DC**			COE-24DC
	28 DC	**28 DC**			COE-28DC
	48 DC	**48 DC**			COE-48DC
	110 DC	**110 DC**			COE-110DC
	125 DC	**125 DC**			COE-125DC
	220 DC	**220 DC**			COE-220DC
	24/50 AC	**24/50/60 AC**		58 VA (3)	COE-24/50/60AC (1)
	48/50 AC	**48/50/60 AC**			COE-48/50/60AC (1)
	110/50 AC	**110/50/60 AC**			COE-110/50/60AC (1)
	230/50 AC	**230/50/60 AC**			COE-230/50/60AC (1)
	115/50 AC	**115/60 AC**		80 VA (3)	COE-115/60AC
	230/50 AC	**230/60 AC**			COE-230/60AC
	110/50 AC - 120/60 AC	**110 RC**	669	30 W	COE-110RC
	230/50 AC - 230/60 AC	**230 RC**			COE-230RC

(1) Coil can be supplied also with 60 Hz of voltage frequency: in this case the performances are reduced by 10 ÷15% and the power consumption is 52 VA.
(2) Average values based on tests preformed at nominal hydraulic condition and ambient/coil temperature of 20°C.
(3) When solenoid is energized, the inrush current is approx 3 times the holding current.

8 COILS ELECTRIC CONNECTORS according to din 43650 (to be ordered separately)

666, 667 (for AC or DC supply)	**669** (for AC supply)	**CONNECTOR WIRING**	
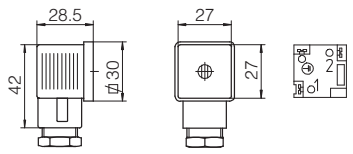	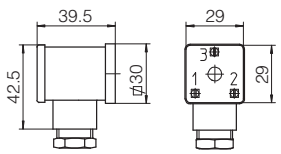	**666, 667** 1 = Positive ⊕ 2 = Negative ⊖ ⊕ = Coil ground	**669** 1,2= Supply voltage VAC 3 = Coil ground
		SUPPLY VOLTAGES	
		666 All voltages	**667** 24 AC or DC 110 AC or DC 220 AC or DC
			669 110/50 AC 110/60 AC 230/50 AC 230/60 AC

9 TECHNICAL CHARACTERISTICS OF FV INDUCTIVE POSITION SWITCH

Type of switch		contactless inductive position switch with integrated amplifier
Supply voltage	[V]	20÷32
Ripple max	[%]	≤ 10
Max current	[mA]	400
Reaction time	[ms]	15
Max peak pressure	[bar]	400
Mechanical life		virtually infinite
Switch logic		PNP

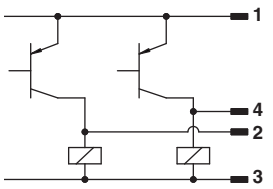

10 CONNECTING SCHEME OF FV INDUCTIVE POSITION SWITCH

Connector type **ZBE-06** (supplied with the valve)

1 = supply +24 VDC
2 = output signal NC
3 = GND
4 = output signal NO

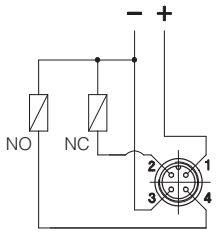

Note: the /FV position switch is not provided with a protective earth connection

11 STATUS OF OUTPUT SIGNAL

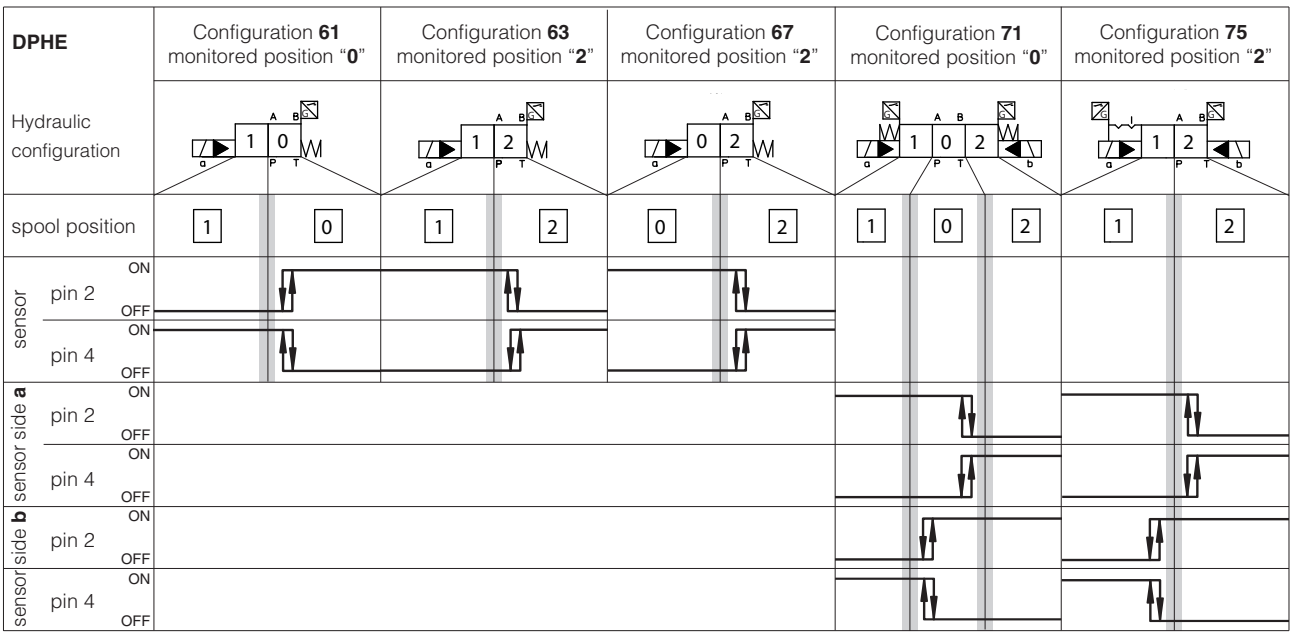

Note:
FV position switch can be electrically wired by the customer as NO or NC and then the status of the output signal will be in accordance to the selected configuration

= intermediate spool position corresponding to the hydraulic configuration change

12 Q/Δp DIAGRAMS based on mineral oil ISO VG 46 at 50°C

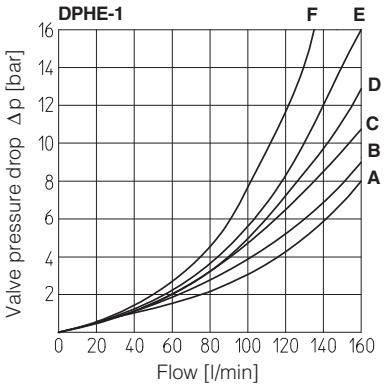

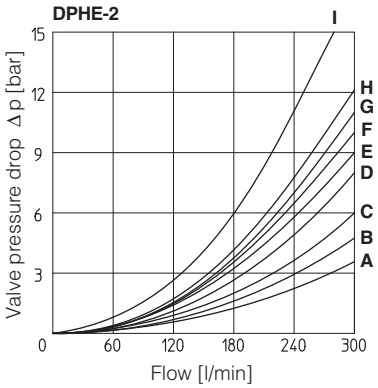

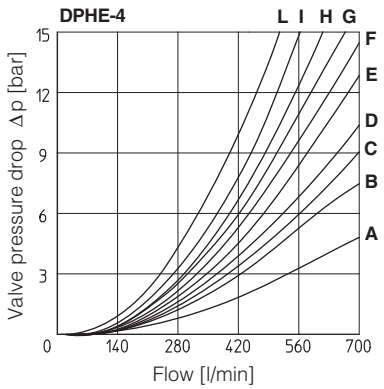

DPHE-1

Spool type \ Flow direction	P→A	P→B	A→T	B→T	P→T
0/2, 1/2	D	E	D	C	-
0	D	E	C	C	E
1	A	B	D	C	-
3, 6, 7	A	B	C	C	-
4, 4/8	B	C	D	D	-
5, 58	A	E	C	C	F

DPHE-2

Spool type \ Flow direction	P→A	P→B	A→T	B→T	P→T
0/2, 1, 3, 6, 7, 8	A	A	D	A	-
1/1, 1/2, 7/1	B	B	D	E	-
0	A	A	D	E	C
0/1	A	A	D	-	-
2	A	A	-	-	-
2/2	B	B	-	-	-
3/1	A	A	D	D	-
4	C	C	H	I	F
4/8	C	C	G	I	F
5	A	B	F	H	G
5/1	A	B	D	F	-
6/1	B	B	C	E	-
09	A	-	-	G	-
16	A	C	D	F	-
17	C	A	E	F	-
19	C	-	-	G	-
39	C	-	-	H	-
49	-	D	-	-	-
58	B	A	F	H	H
58/1	B	A	D	F	-
90	A	A	E	-	D
91	C	C	E	-	-
93	-	C	D	-	-
94	D	-	-	-	-

DPHE-4

Spool type \ Flow direction	P→A	P→B	A→T	B→T	P→T
1	B	B	B	D	-
1/1	D	E	E	F	-
1/2	E	D	B	C	-
0	D	C	D	E	F
0/1, 3/1, 5/1, 6, 7	D	D	D	F	-
0/2	D	D	D	E	-
2	B	B	-	-	-
2/2	E	D	-	-	-
3	B	B	D	F	-
4	C	C	H	L	L
5	A	D	D	D	H
6/1	D	E	D	F	-
7/1	D	E	F	F	-
8	D	D	E	F	-
09	D	-	-	F	F
16	C	D	E	F	-
17	E	D	E	F	-
19	F	-	-	E	-
39	G	F	-	F	-
58	E	A	B	F	H
58/1	E	D	D	F	-
90	D	D	D	-	F
91	F	F	D		
93	-	G	D	-	-

13 OPERATING LIMITS based on mineral oil ISO VG 46 at 50°C

For a correct valve operation do not exceed the max recommended flow rates (l/min) shown in the below tables

DPHE-1

Spool	Inlet pressure [bar]			
	70	160	210	350
	Flow rate [l/min]			
0, 1, 3, 6, 7	160	160	160	145
4, 4/8	160	160	135	100
5, 58	160	160	145	110
0/1, 0/2, 1/2	160	160	145	135

DPHE-2

Spool	Inlet pressure [bar]			
	70	140	210	350
	Flow rate [l/min]			
0, 1, 3, 6, 7, 8	300	300	300	300
2, 4, 4/8	300	300	240	140
5	260	220	180	100
0/1, 0/2, 1/2	300	250	210	180
16, 17, 56, *9, 9*	300	300	270	200

DPHE-4

Spool	Inlet pressure [bar]			
	70	140	210	350
	Flow rate [l/min]			
1, 6, 7, 8	700	700	700	600
2, 4, 4/8	500	500	450	400
5, 0/1, 0/2, 1/2	600	520	400	300
0, 3	700	700	600	540
16, 17, 58, *9, 9*	500	500	500	450

14 SWITCHING TIMES (average values in m sec)

TEST CONDITIONS:
- Nominal voltage supply DC (direct) and AC (alternating) with connector type SP-666. The use of other connectors can affect the switching time;
- 2 bar of counter pressure on port T;
- mineral oil: ISO VG 46 at 50°C

Piloting pressure		70 bar		140 bar		250 bar	
Valve model		Alternating current	Direct current	Alternating current	Direct current	Alternating current	Direct current
DPHE-1	Switch ON	35÷50	50÷75	30÷40	45÷65	20÷30	35÷50
	Switch OFF	50÷80					
DPHE-2	Switch ON	40÷55	55÷80	30÷45	50÷70	20÷35	40÷55
	Switch OFF	60÷95					
DPHE-4	Switch ON	60÷95	80÷115	45÷75	60÷95	30÷50	45÷65
	Switch OFF	80÷130					

15 PLUGS LOCATION FOR PILOT/DRAIN CHANNELS

Depending on the position of internal plugs, different pilot/drain configurations can be obtained as shown below.
To modify the pilot/drain configuration, proper plugs must only be interchanged. The plugs have to be sealed using loctite 270.
Standard valves configuration provides internal pilot and external drain

DPHE-1

Pilot channels

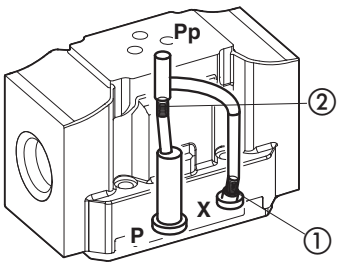

Drain channels

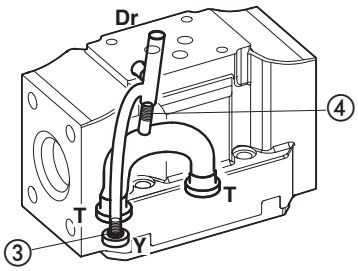

Internal piloting: blinded plug SP-X300F ① in X;
plug SP-X310F ② in Pp;
External piloting: blinded plug SP-X300F ② in Pp;
plug SP-X310F ① in X;
Internal drain: blinded plug SP-X300F ③ in Y;
External drain: blinded plug SP-X300F ④ in Dr.

DPHE-2

Pilot channels

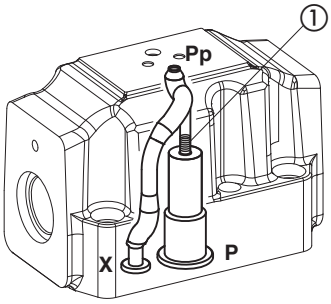

Drain channels

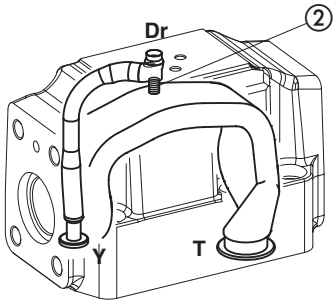

Internal piloting: Without blinded plug SP-X300F ①;
External piloting: Add blinded plug SP-X300F ①;
Internal drain: Without blinded plug SP-X300F ②;
External drain: Add blinded plug SP-X300F ②.

Option L9
This option provides a calibrated restrictor PLUG-H-12A (Ø 1,2 mm) in the P port of the pilot valve

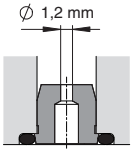

PLUG-12A

DPHE-4

Pilot channels

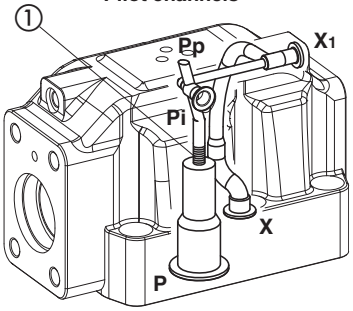

Drain channels

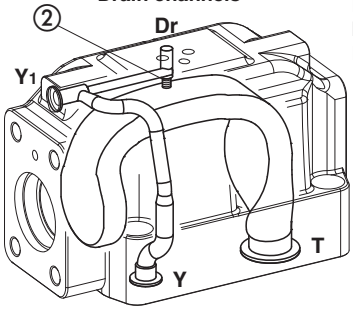

Internal piloting: Without blinded plug SP-X500F ①;
External piloting: Add blinded plug SP-X500F ①;
Internal drain: Without blinded plug SP-X300F ②;
External drain: Add blinded plug SP-X300F ②.

Option L9
This option provides a a calibrated restrictor PLUG-H-15A (Ø 1,5 mm) in the P port of the pilot valve

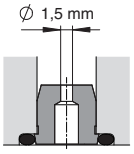

PLUG-15A

DPHE-1/FV

ISO 4401: 2005
Mounting surface:
4401-05-05-0-05
Fastening bolts:
4 socket head screws M6x40 class 12.9
Tightening torque = 15 Nm
Seals: 5 OR 2050, 2 OR 108
Ports P,A,B,T: Ø = 11 mm (max)
Ports X, Y: Ø = 5 mm

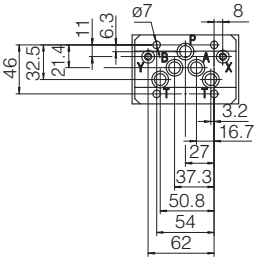

Mass (Kg)	
DPHE-16	7,2
DPHE-17	7,9
Option H, H9	+1,0

P = PRESSURE PORT
A, B = USE PORT
T = TANK PORT
X = EXTERNAL OIL PILOT PORT
Y = DRAIN PORT

DPHE-171*
DPHE-175*

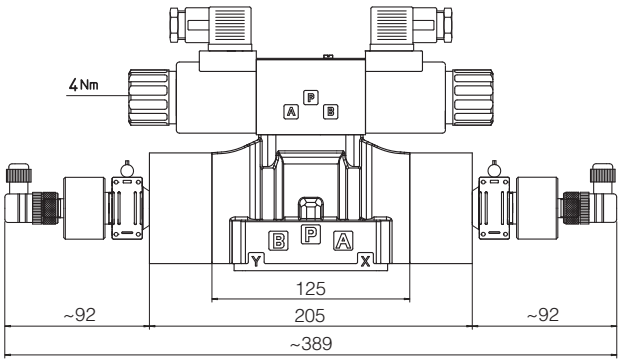

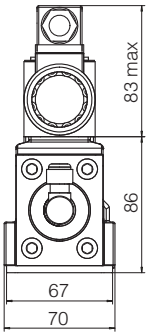

DPHE-161*

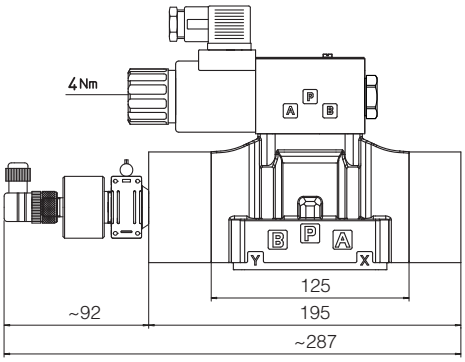

DPHE-161*/A

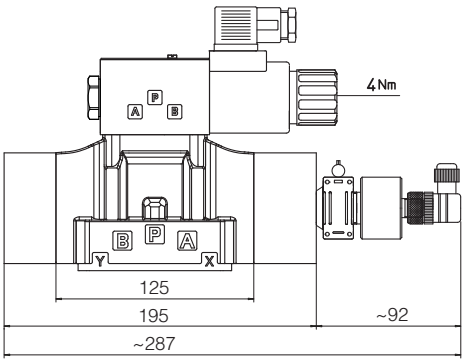

DPHE-163*
DPHE-167*

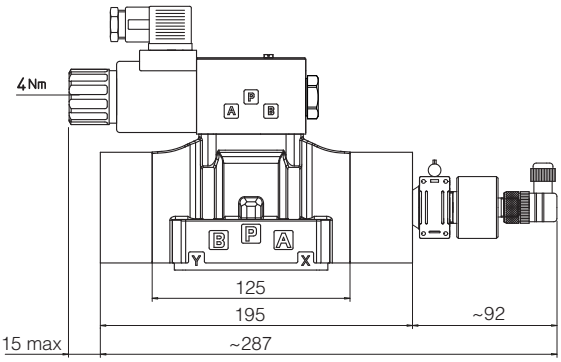

DPHE-163*/A
DPHE-167*/A

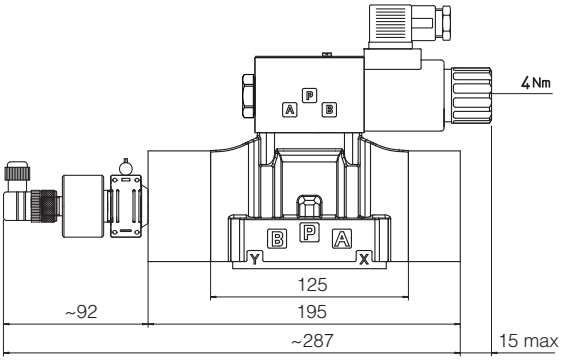

DPHE-2*/FV

ISO 4401: 2005
Mounting surface: 4401-07-07-0-05

Fastening bolts:
4 socket head screws M10x50 class 12.9
Tightening torque = 70 Nm
2 socket head screws M6x45 class 12.9
Tightening torque = 15 Nm
Diameter of ports A, B, P, T: Ø = 20 mm;
Diameter of ports X, Y: Ø = 7 mm;
Seals: 4 OR 130, 2 OR 2043

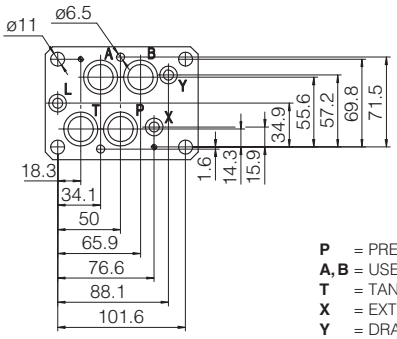

Mass (Kg)	
DPHI-26	10,1
DPHI-27	10,7
DPHE-26	10,2
DPHE-27	10,9
Option H, H9	+1,0

P = PRESSURE PORT
A, B = USE PORT
T = TANK PORT
X = EXTERNAL OIL PILOT PORT
Y = DRAIN PORT

DPHE-271*
DPHE-275*

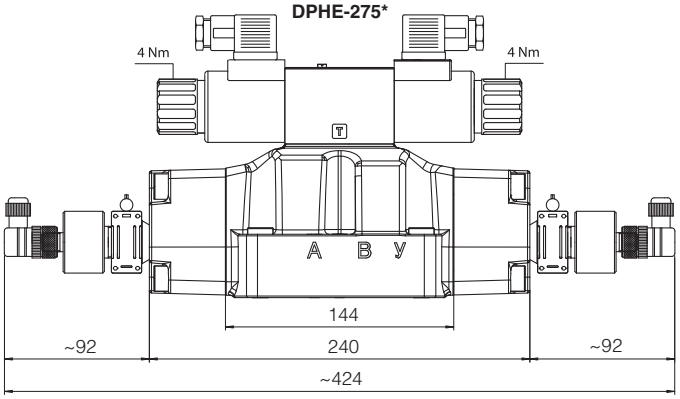

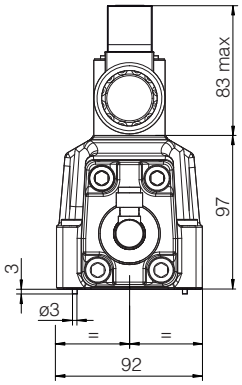

DPHE-261*

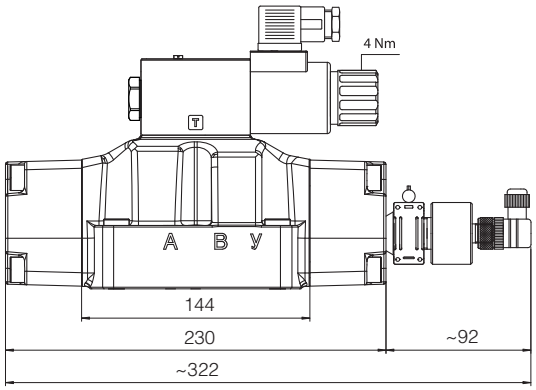

DPHE-261*/A

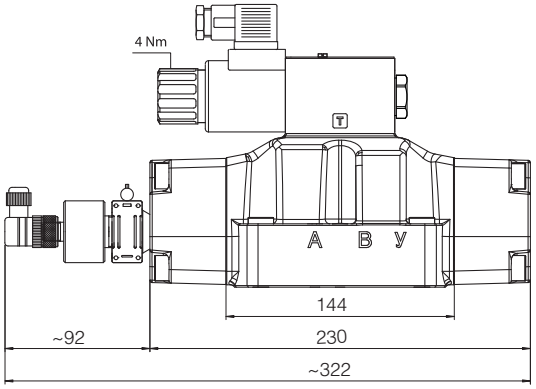

DPHE-263*
DPHE-267*

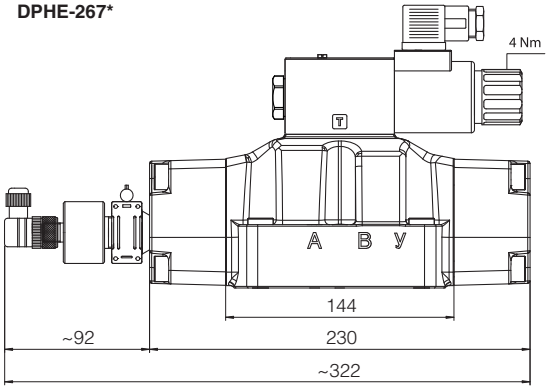

DPHE-263*/A
DPHE-267*/A

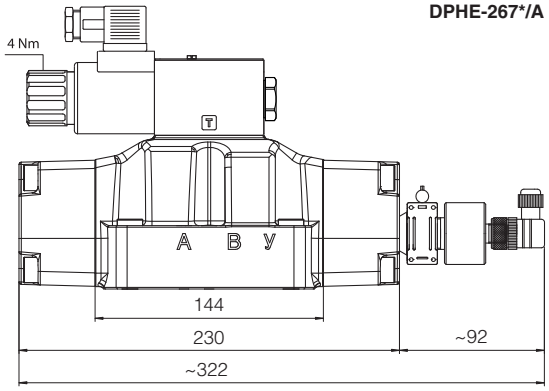

DPHE-4*/FV

ISO 4401: 2005
Mounting surface: 4401-08-08-0-05

Fastening bolts:
6 socket head screws M12x60 class 12.9
Tightening torque = 125 Nm
Diameter of ports A, B, P, T: Ø = 24 mm;
Diameter of ports X, Y: Ø = 7 mm;
Seals: 4 OR 4112, 2 OR 3056

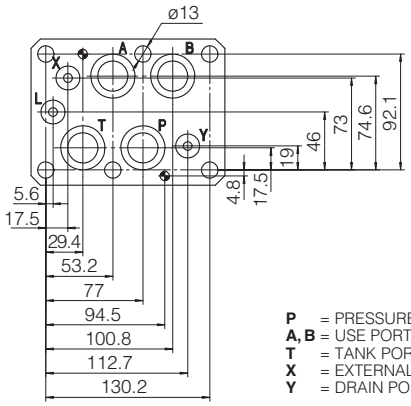

Mass (Kg)	
DPHI-46	17,6
DPHI-47	18,2
DPHE-46	17,7
DPHE-47	18,4
Option H, H9	+1,0

P = PRESSURE PORT
A, B = USE PORT
T = TANK PORT
X = EXTERNAL OIL PILOT PORT
Y = DRAIN PORT

DPHE-471*
DPHE-475*

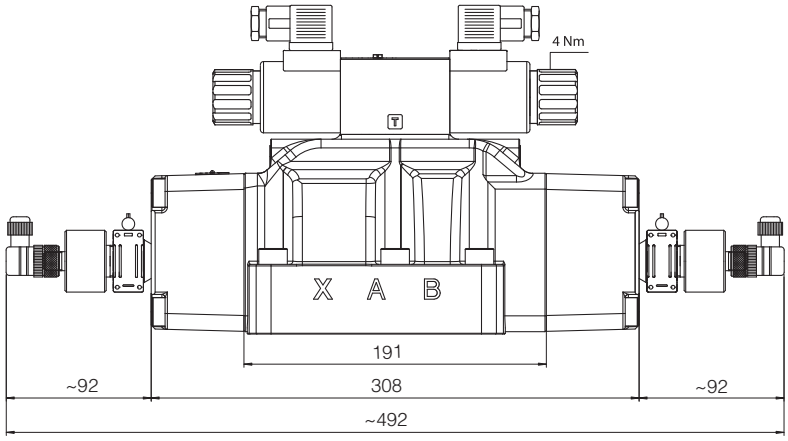

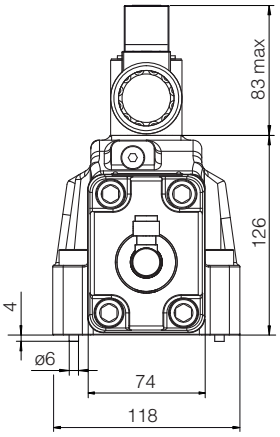

DPHE-461*

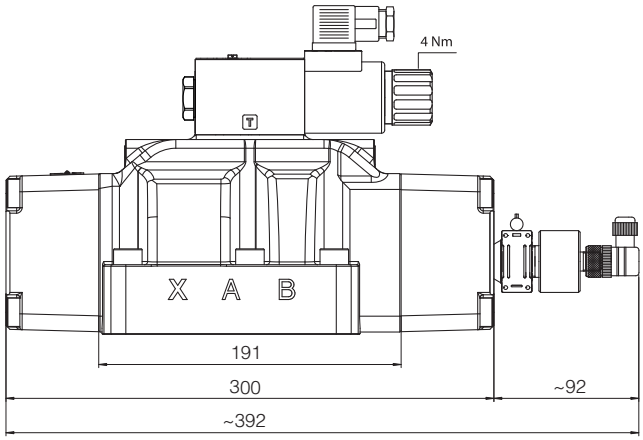

DPHE-461*/A

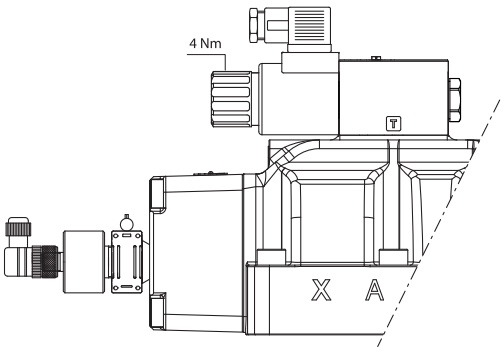

DPHE-463*
DPHE-467*

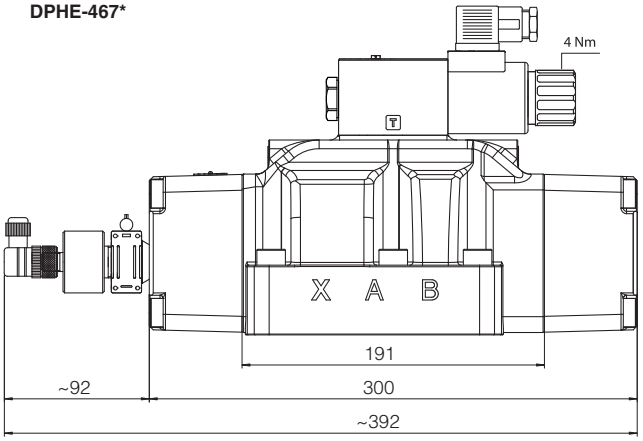

DPHE-463*/A
DPHE-467*/A

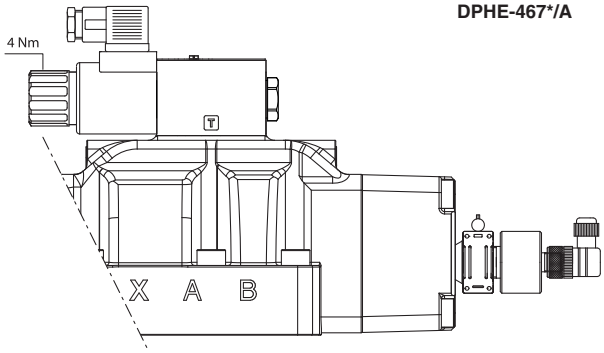

Safety cartridge valves with poppet position monitoring

screw-in, 2-way, poppet type, leak free, conforming to Machine Directive 2006/42/CE - certified by

CE

SAFETY CERTIFIED

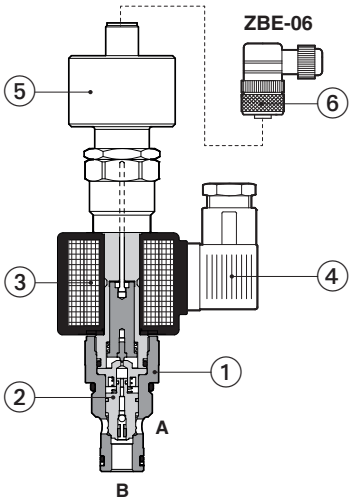

① cartridge body
② poppet
③ coil
④ coil connectors
⑤ inductive position switch
⑥ sensor connector (to be ordered separately)

JO-DL-4-2/FV-X 24DC

JO-DL are leak free, poppet type solenoid cartridges in screw-in execution normally used to cut off the hydraulic power supply line. They are available in normally closed NC configuration.

They are provided with /**FV** inductive position switch (double contact NC/NO) ⑤ wich supplies the output electrical on-off signal indicating the poppet ② position (open/closed), and therefore they can be used as safety valves for emergency conditions.

They are **CE** marked and certified by **TÜV** in accordance with safety requirements of Machine Directive 2006/42/CE.

Certification
The **TÜV** certificate can be downloaded from www.atos.com, catalog on line, technical information section.

Max flow: **300 l/min**
Max pressure: **350 bar**

1 MODEL CODE

JO	-	D	L	-	4	-	2	/	FV	-	X	24 DC	**	/	*

Cartridge valve screw-in type UNF

D = Directional control

L = Poppet type

Size:
4 = 3/4”-16UNF-2A
6 = 7/8”-14UNF-2A
10 = 1 5/16”-12UNF-2A

2 = Two-way

Version:
FV = normally closed in rest position, with inductive position switch (double contact)

X = Without connector, see section 5 for available connector

Voltage code:
12DC = 12 VDC
24DC = 24 VDC

Series number

Seals material, see section 4:
- = NBR
PE = FKM

2 HYDRAULIC CHARACTERISTICS

Hydraulic symbol

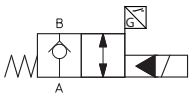

Model		JO-DL-4-2/FV	JO-DL-6-2/FV	JO-DL-10-2/FV
Operating pressure	[bar]	Ports A and B **350**		
Max flow	[l/min]	40	75	300
Response time: energizing	[ms]	35	30	35
de-energizing	[ms]	50	60	70
Internal leakage		less than 5 drops/min (≤ 0,36 cm³/min) max at 350 bar		

3 GENERAL CHARACTERISTICS

Installation position	Any position
Cavity	JO-DL-4 = SAE-08-2N; JO-DL-6 = SAE-10-2N; JO-DL-10 = SAE-16-2N
MTTFd values according to EN ISO 13849	150 years, for further details see technical table P007
Compliance	CE to Machine Directive 2006/42/EC. -EC type-examination certificate for safety components **(1)** -ISO 13849 category 1, PLC in high demand mode CE to Low Voltage Directive 2014/35/EU and Machine Directive 2006/42/EC.
Ambient temperature	**Standard** execution = -20°C ÷ +50°C **/PE** option = -20°C ÷ +50°C

(1) The type-examination certificate can be download from www.atos.com

4 SEALS AND HYDRAULIC FLUID - for other fluids not included in below table, consult Atos Technical Office

Seals, recommended fluid temperature	NBR seals (standard) = -20°C ÷ +80°C, with HFC hydraulic fluids = -20°C ÷ +50°C FKM seals (/PE option) = -20°C ÷ +80°C		
Recommended viscosity	15÷100 mm²/s - max allowed range 2.8 ÷ 500 mm²/s		
Fluid contamination class	ISO 4406 class 21/19/16 NAS 1638 class 10, in line filters of 25 µm (β10 ≥ 75 recommended)		
Hydraulic fluid	**Suitable seals type**	**Classification**	**Ref. Standard**
Mineral oils	NBR, FKM	HL, HLP, HLPD, HVLP, HVLPD	DIN 51524
Flame resistant without water	FKM	HFDU, HFDR	ISO 12922
Flame resistant with water	NBR	HFC	

5 ELECTRIC CHARACTERISTICS

Relative duty factor	100%	
Supply voltage	See model code at section 1	
Supply voltage tolerance	±10%	
Max power	20 Watt	
Power connector	666 (plastic - black); 3 pins, cable clamp PG11, cable max ø 11 mm	**to be ordered separately**
Type of connector for /FV version	Type ZBE-06 (plastic); 4 pins, cable clamp PG9, cable max ø 8 mm	
Connectors features	666: DIN 43650 - ISO 4400; IP65 (DIN 40050); VDE 0110C	
	ZBE-06: M12 - IEC60947-5-2; IP67 (DIN 40050)	

6 INSTALLATION NOTES

1) The assembling of cartridges inside manifolds must be done tightening the valve exagonal ring (for tightening torque, see section 10).
   Excessive values can cause anomalous deformation and poppet sticking.
   For the /FV versions avoid to tighten through the position sensor.
2) The CE certification is valid only with shielded electric cables and connector. Consult also tab. P004.
   These safety valves must be supplied only and always as one complete component, proximity sensor is factory adjusted.
   The supply of subcomponents invalidates the certification.

7 TECHNICAL CHARACTERISTICS AND CONNECTING SCHEME OF INDUCTIVE POSITION SWITCH /FV

Type of switch		position switch **/FV**
Supply voltage	[V]	20÷32
Ripple max	[%]	10
Max current	[mA]	400
Max peak pressure	[bar]	400
Mechanical life		virtually infinite
Switch logic		PNP

Note: the /FV position switch are not provided with a protective earth connection

Connector type **ZBE-06**

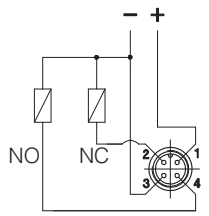

1 = supply +24 VDC
2 = output signal NC
3 = GND
4 = output signal NO

8 SIGNAL STATUS - VERSIONS /FV

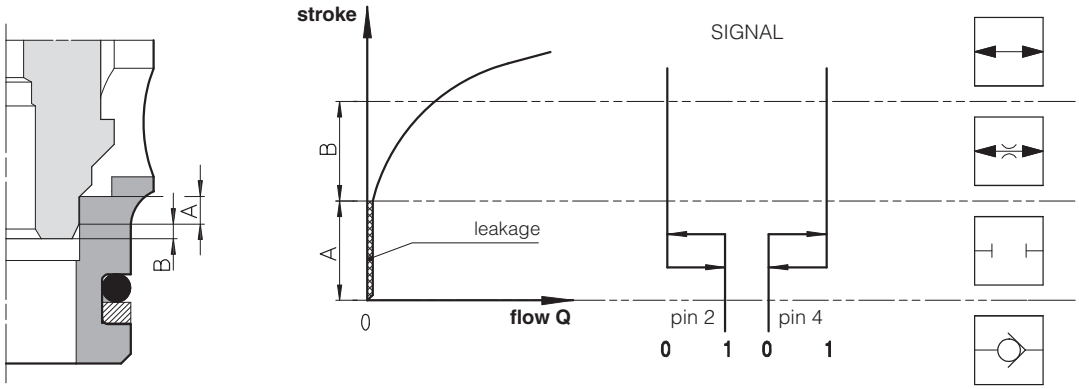

A: overlapping stroke
B: damping stroke

According the criteria of safety specifications, the poppet position signal must change its status inside the overlapping stroke (before the effective valve opening).

9 DIAGRAMS based on mineral oil ISO VG 46 at 50°C

9.1 JO-DL-4

Valve pressure drop - FV version
1= A → B energized
2= B → A de-energized
3= B → A energized

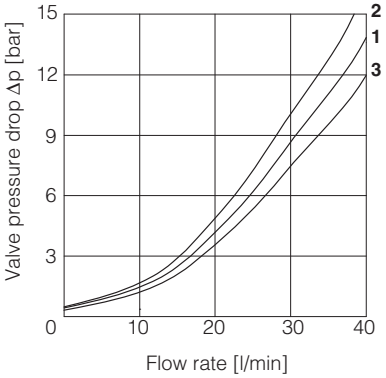

9.2 JO-DL-6

Valve pressure drop - FV version
1= A → B energized
2= B → A de-energized
3= B → A energized

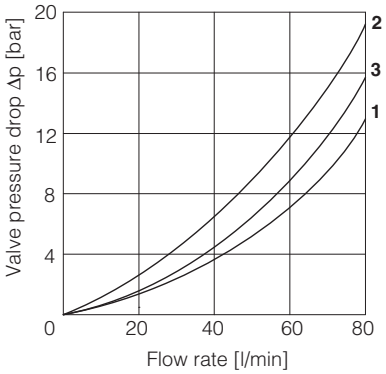

9.3 JO-DL-10

Valve pressure drop - FV version
1= A → B energized
2= B → A de-energized
3= B → A energized

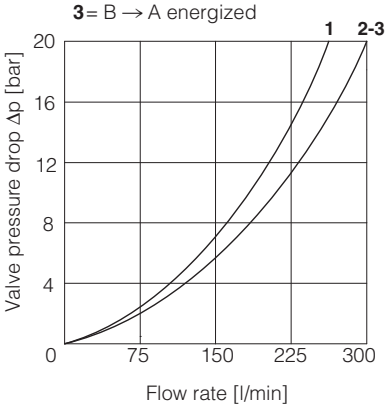

10 DIMENSIONS [mm]

JO-DL-4-2-2/FV
Mass 0.5 Kg

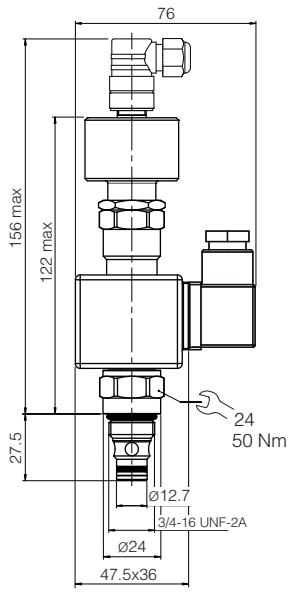

JO-DL-6-2/FV
Mass 0.5 Kg

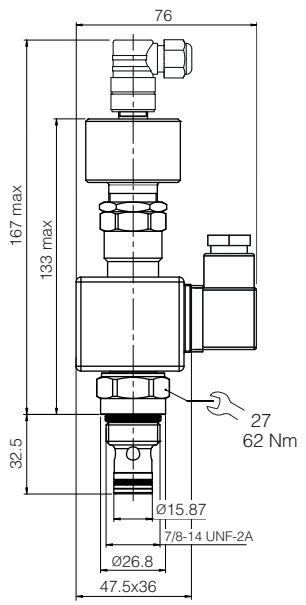

JO-DL-10-2/FV
Mass 0.7 Kg

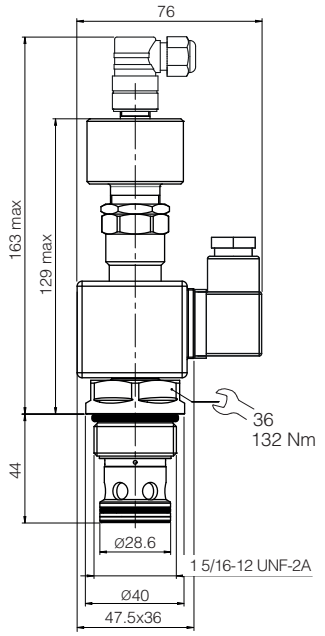

Note: cavity compatible with old cartridge series

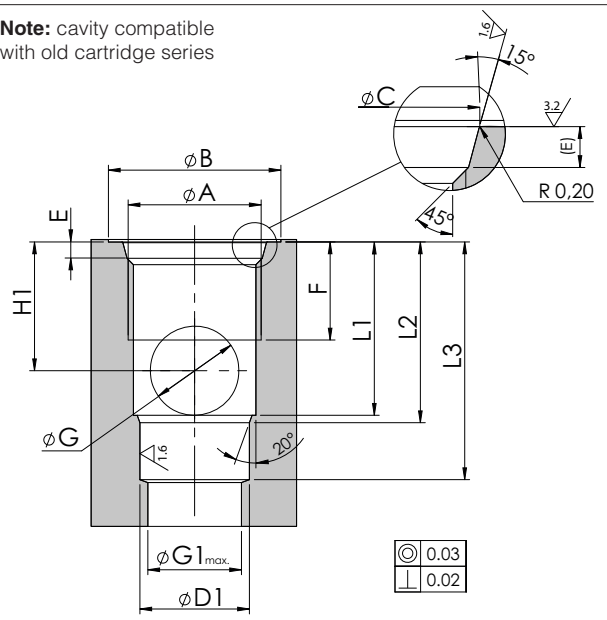

	JO-DL-4-2	JO-DL-6-2	JO-DL-10-2
A	3/4-16 UNF	7/8-14 UNF	1 5/16-12 UNF
B	26	30	42
C	$20.6^{+0.1}_{0}$	$23.9^{+0.1}_{0}$	$35.5^{+0.1}_{0}$
D1	$12.7^{+0.05}_{0}$	$15.87^{+0.05}_{0}$	$28.60^{+0.05}_{0}$
E	$2.6^{+0.3}_{0}$	$2.6^{+0.3}_{0}$	$3.3^{+0.3}_{0}$
F	13	15	20
G	9	12	19
G1	12	15	24
H1	14	18	25
L1	19.1	24.2	33.5
L2	20.5	25.5	36
L3	29	34.5	49

Safety cartridge valves with poppet position monitoring

ISO standard, on-off, poppet type, conforming to Machine Directive 2006/42/EC - certified by

SAFETY CERTIFIED

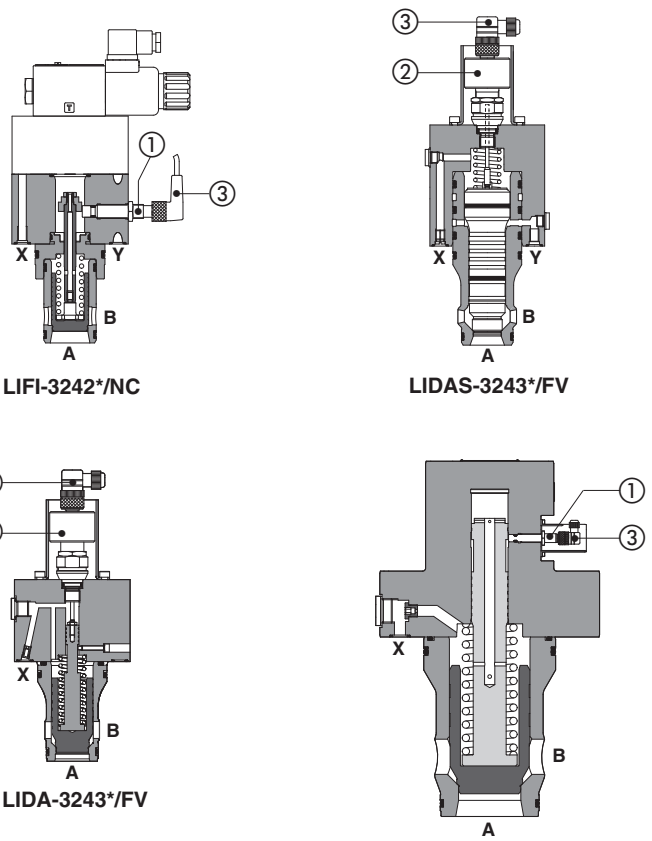

① Inductive proximity sensor **FI**
② Inductive position switch **FV**
③ Sensor electric connector (supplied with the valve)

Safety cartridge valves with poppet position monitoring, **CE** marked and certified by **TÜV**, in accordance with safety requirements of Machine Directive 2006/42/EC.
They are used to cut-off the hydraulic user line, preventing undesired movements of the machine actuators.

Contactless sensor type **FI** (inductive proximity) or **FV** (inductive position switch) monitors the poppet "closed" position so that the valve "safe" condition can be clearly verified by the machine controller

Available models:

LIFI: intermediate safety element and cartridge with sensor type **FI**, designed for coupling with functional covers type LIDA, LIDB, LIDEW, LIDBH, to realize different hydraulic schemes.

LIDA: integral cover design and cartridge with sensor type FV (size 16-50) or FI (size 63-100), typically used to intercept the flow in one direction.
LIDAH version with solenoid pilot valve to control the poppet opening / closing.

LIDAS: actively pilot operated valve with sensor type FV.
The valve's poppet is hydraulically controlled in both open or closed position by a pilot pressure though X and Y ports.
LIDASH version with sensor type FV (size 16-50) or FI (size 63-80) and solenoid pilot valve to control the poppet opening / closing.

Certification
The **TÜV** certificate can be downloaded from www.atos.com, catalog on line, technical information section.

Mounting surface & cavity:
ISO 7368 size **16** to **100**
Max flow: **6300 l/min** at Δp = 5 bar
Max pressure: up to **420 bar**

1 RANGE OF SAFETY CARTRIDGE MODELS

Valve code	size ISO 7368	Description	Max flow [l/min] at Δp 5 bar	Max pressure [bar]	Pilot valve	Sensor type	
						/FI	/FV
LIFI	16÷50	intermediate elements with cartridge, to be coupled with a functional cover	1800	420	-	●	
LIDA /FV	16÷50	cartridge valve, integral cover design	2200	420	-		●
LIDA /FI	63÷100		6300	420	-	●	
LIDAH /FV-E	16÷50	cartridge valve, integral cover design with pilot solenoid valve	2200	350	DHE		●
LIDAH /FV-EP	16÷50		2200	420	DHEP		●
LIDAS /FV	16÷50	cartridges valve, actively pilot operated	1800	420	-		●
LIDASH /FV-E	16÷50	cartridge valve, actively pilot operated with pilot solenoid valve	1800	350	DHE		●
LIDASH /FV-EP	16÷50		1800	420	DHEP		●
LIDASH /FI-E	63, 80		3000	350	DKE	●	
LIDASH /FI-EP	63, 80		3000	420	DKEP	●	

Notes: **FI** = inductive proximity sensor, type NC (normally closed)
FV = inductive position switch providing both NO and NC contacts to be wired on the electric connector
See section 18 and 19 for sensor's characteristics

2 MODEL CODE OF LIFI INTERMEDIATE SAFETY ELEMENT to be coupled with covers in section 3

LI	FI	-	25	42	1	/	NC	**	/	*

Intermediate saferty element and cartridge according to ISO 7368

Poppet position monitor:F
I = inductive proximity switch

Size ISO 7368
16; 25; 32; 40; 50
Other dimensions available on request

Type of poppet, see sect. 21 for Q/Δp diagrams
42 = with damping nose, area ratio 1:1,1
43 = with damping nose, area ratio 1:2 (size 16 and 25), 1:1,6 (size 32, 40, 50)

/NC = closed contact with poppet in resting position

Series number

Seals material:
- = NBR
PE = FKM

Spring cracking pressure:
1 = 0,3 bar for poppet 42; 0,6 bar for poppet 43
2 = 1,5 bar for poppet 42
3 = 3 bar for all poppets
6 = 5,5 bar for all poppets

2.1 Hydraulic symbols of LIFI

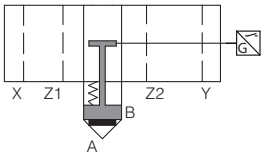

Note: in LIFI safety valves the cartridge and the intermediate element with poppet position sensor cannot be separated

3 MODEL CODE OF FUNCTIONAL COVERS to be coupled with LIFI safety valves (see also tech tables H030, H040)

LID	A	-	2	/	*	F	-	E	X	24DC	**	/	*	/	*

Cover according to ISO 7368

Cover type, see section 3.1 for hydraulic configuration:
A = direct pilot
B = with shuttle valve for pilot selection;
EW* = with solenoid valve for pilot selection
BH** = as EW* but with shuttle valve for pilot selection;

Size ISO 7368
1 = 16; **2** = 25; **3** = 32; **4** = 40; **5**= 50;

Options:
B = cartridge piloted via port B of solenoid valve (only for LIDEW* and LIDBH**)
E = with external attachment X (1/4" GAS) and underneath port X plugged

F = prearranged for coupling with LIFI cover

Optional different setting of calibrated plugs in the pilot channels (see tech. tables H030, H040)

Seals material:
- = NBR
PE = FKM

Series number

Voltage code only for LIDEW* and LIDBH**: see section 16

Only for LIDEW* and LIDBH**:
X = without connector, to be order separately see section 17

Type of pilot solenoid valve only for LIDBH** and LIDEW*:
E = DHE Pmax **350 bar**
EP = DHEP Pmax **420 bar**

For valve type LIDB, LIDEW (in the configuration with external pilot line) Atos can supply leak free poppet type directional pilot valves type DLEH-3*. Consult our technical office for detailed information.

3.1 HYDRAULIC SYMBOLS OF FUNCTIONAL COVERS

the following symbols show the functional covers coupled with intermediate safety element type LIFI

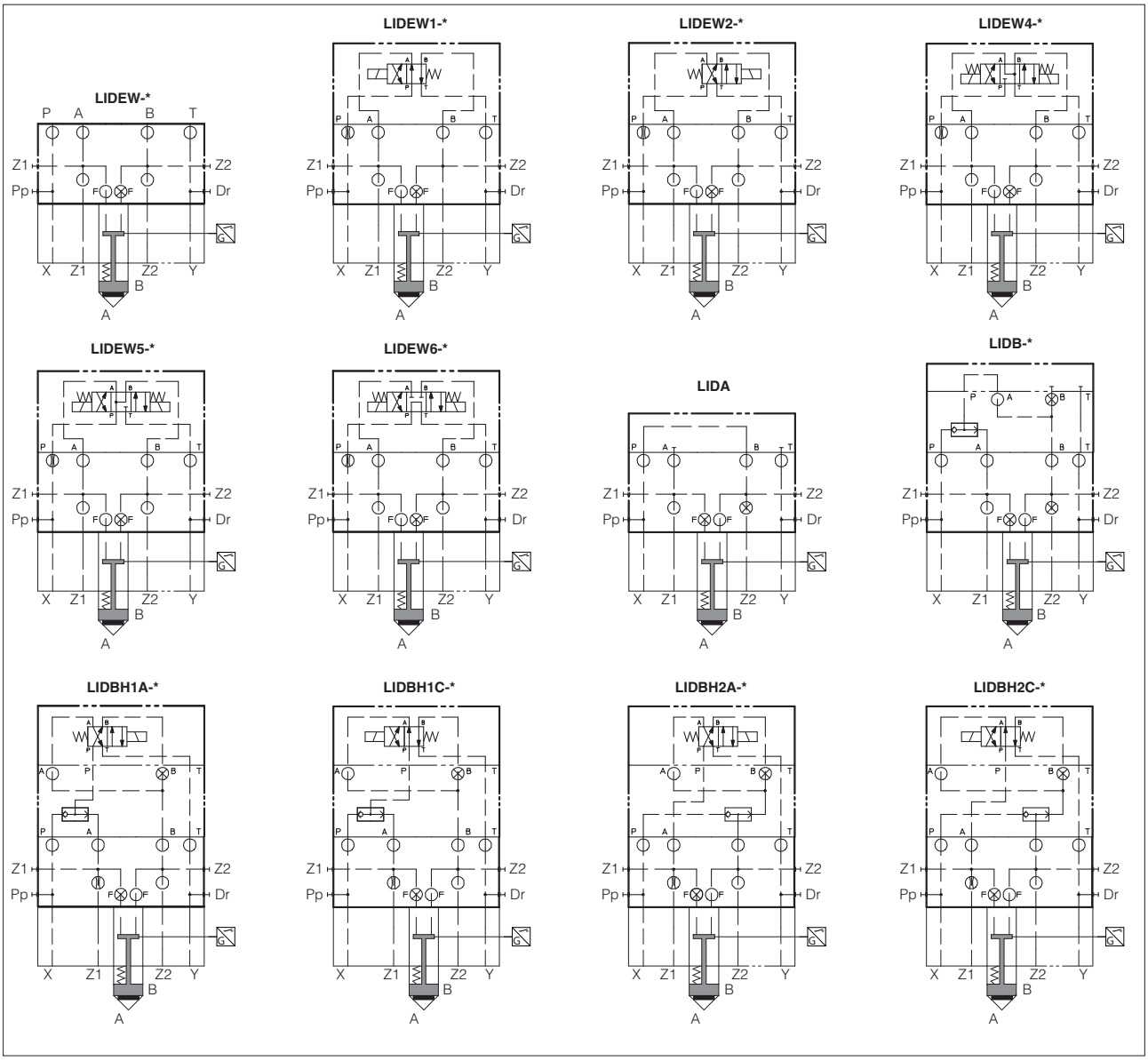

4 EXAMPLES OF LIFI COUPLED WITH OTHER COVERS (examples in size 32)

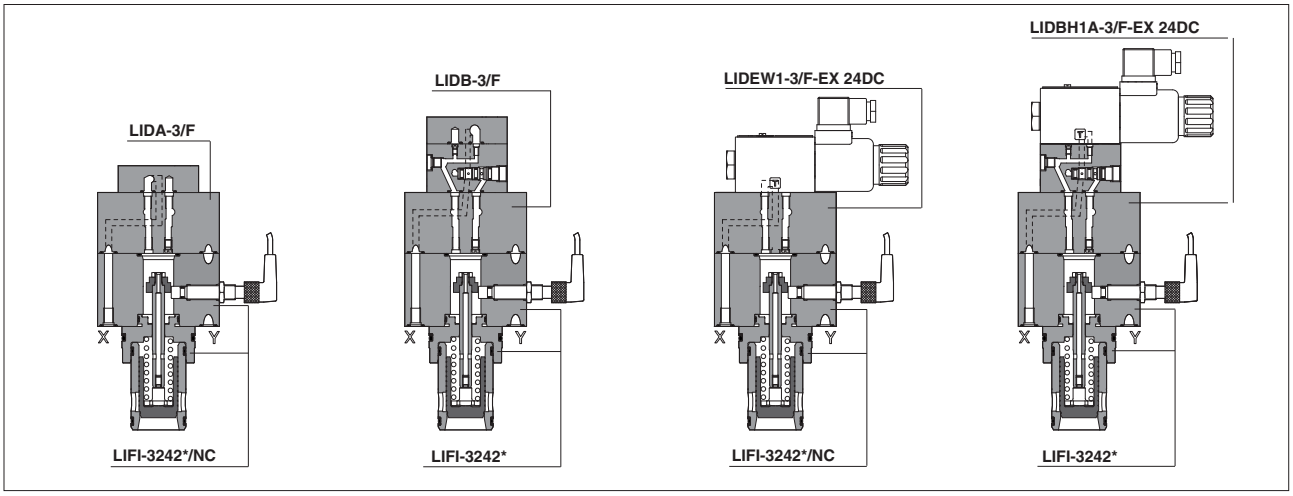

5 MODEL CODE OF LIDA integral cover design

LIDA	-	25	43	3	/	FI	**	/	*

Safety cartridge valve

Size ISO 7368:
16; **25**; **32**; **40**;
50; **63**; **80**; **100**;

poppet type:
43 = with damping nose area ratio 1:1,5

spring cracking pressure:
1 = 0,6 bar (not for size 63÷100)
3 = 3 bar
6 = 5,5 bar (not for size 63÷100)

Seals material:
- = NBR
PE = FKM

Series number

Poppet position monitor:
For size 16÷50
FV = inductive position switch (double contact)
For size 63÷100
FI = inductive proximity sensor

6 MODEL CODE OF LIDAH integral cover design, with pilot solenoid valve

LIDA	H	-	25	43	3	/	FV	-	E	X	24DC	**	/	*

Safety cartridge valve

H = with pilot solenoid valve

Size ISO 7368:
16; **25**; **32**; **40**; **50**

poppet type:
43 = with damping nose area ratio 1:1,5

spring cracking pressure:
1 = 0,6 bar **3** = 3 bar **6** = 5,5 bar

Poppet position monitor:
FV = inductive position switch (double contact)

Pilot solenoid valve
E = DHE Pmax **350 bar**
EP = DHEP Pmax **420 bar**

X = without connector, to be order separately see section 17

Voltage code, see section 16

Series number

Seals material:
- = NBR
PE = FKM

6.1 HYDRAULIC SYMBOLS OF LIDA /FV (/FI) and LIDAH /FV

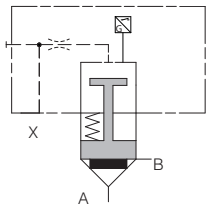

LIDA-43/FI**
(size 63÷100)

LIDA-43/FV**
(size 16÷50)

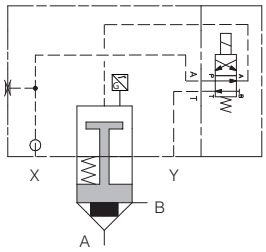

LIDAH-43/FV**
(size 16÷50)

7 MODEL CODE OF LIDAS actively pilot operated

LIDAS	-	40	43	3	/	FV	**	/	*

Safety cartridges, actively piloted operated

Size ISO 7368:
16; **25**; **32**; **40**; **50**

Poppet type:
43 = with damping nose

Spring cracking pressure
3 = 3 bar

Poppet position monitor:
FV = inductive position switch (double contact)

Series number

Seals material:
- = NBR
PE = FKM

8 MODEL CODE OF LIDASH actively pilot, with pilot solenoid valve

LIDAS	H	-	40	43	3	/	FV	-	E	X	24DC	**	/	*

Safety cartridges, actively piloted operated

H = with pilot solenoid valve

Size ISO 7368:
16; **25**; **32**; **40**; **50**; **63**; **80**;

Poppet type:
43 = with damping nose

Spring cracking pressure
3 = 3 bar

Poppet position monitor:
For size 16÷50
FV = inductive position switch (double contact)
For size 63 and 80
FI = inductive proximity sensor

Pilot solenoid valve
E = DHE (size 16÷50) Pmax **350 bar**
DKE (size 63 and 80) Pmax **350 bar**
EP = DHEP (size 16÷50) Pmax **420 bar**
DKEP (size 63 and 80) Pmax **420 bar**

X = without connector, to be order separately see section 17

voltage code, see section 16

Series number

Seals material:
- = NBR
PE = FKM

8.1 HYDRAULIC SYMBOLS OF LIDAS

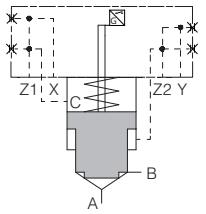

LIDAS/FV

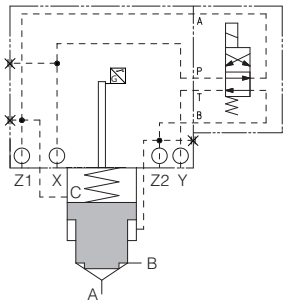

LIDASH-*/FV
(size 16÷50)
LIDASH-*/FI
(size 63 and 80)

9 GENERAL CHARACTERISTICS

Assembly position	Any position
Subplate surface finishing to ISO 4401	Acceptable roughness index: Ra ≤0,8, recommended Ra 0,4 – Flatness ratio 0,01/100
MTTFd valves according to EN ISO 13849	150 years for LIFI, LIDA, LIDAS; 75 years for LIDAH, LIDASH for futher details see technical table P007
Ambient temperature range	**Standard** = -20°C ÷ +60°C **/PE** option = -20°C ÷ +60°C
Storage temperature range	**Standard** = -20°C ÷ +70°C **/PE** option = -20°C ÷ +70°C
Surface protection	Zinc coating with black passivation, galvanic treatment (driver housing)
Corrosion resistance	Salt spray test (EN ISO 9227) > 200 h
Vibration resistance	See technical table G004
Compliance	CE according to EMC directive 2014/30/EU (Immunity: EN 61000-6-2; Emission: EN 61000-6-3) RoHS Directive 2011/65/EU as last update by 2015/863/EU REACH Regulation (EC) n°1907/2006

10 FLOW DIRECTION AND OPERATING PRESSURE

Flow direction	A→B or B→A
Operating pressure	**LIFI** A, B, X, Z1, Z2 = **420** bar;
	LIDA /FV (size 16÷50), **LIDA /FI** (size 63÷100) A, B, X = **420** bar;
	LIDAH /FV-E A, B, X = **350** bar; Y = **210** bar (DC), **160** bar (AC)
	LIDAH /FV-EP A, B, X = **420** bar; Y = **210** bar (DC), **160** bar (AC)
	LIDAS /FV A, B, X, Y, Z1, Z2 = **420** bar;
	LIDASH /FV-E A, B, X, Z1, Z2 = **350** bar; Y = **210** bar (DC), **160** bar (AC)
	LIDASH /FV-EP A, B, X, Z1, Z2 = **420** bar; Y = **210** bar (DC), **160** bar (AC)

11 HYDRAULIC CHARACTERISTICS OF LIFI

Size	**16**	**25**	**32**	**40**	**50**
Poppet type **42** **Nominal flow** at Δp 5 bar (l/min) 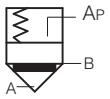	140	300	550	1150	1800
Area ratio A:Ap	1:1,1				
Poppet type **43** **Nominal flow** at Δp 5 bar (l/min) 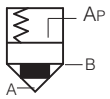	120	280	440	860	1370
Area ratio A:Ap	1:2		1:1,6		

12 HYDRAULIC CHARACTERISTICS OF LIDA, LIDAH

Size	**16**	**25**	**32**	**40**	**50**	**63**	**80**	**100**
Poppet type **43** **Nominal flow** at Δp 5 bar (l/min) 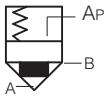	240	500	800	1400	2200	3300	4000	6300
Area ratio A:Ap	1:1,5							

13 HYDRAULIC CHARACTERISTICS OF LIDAS, LIDASH

Size	**16**	**25**	**32**	**40**	**50**	**63**	**80**
Maximum flow at Δp = 5 bar [l/min]	200	300	550	1100	1800	2400	3000
Poppet characteristics	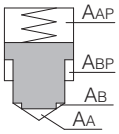 **Poppet areas** **AA** = main flow (side A) **AB** = main flow (side B) **AAP** = piloting area (close) **ABP** = piloting area (open) Thanks to the areas ratio AAP/(AA+AB), the valve closing is always ensured with a piloting pressure (X port) equal to the line pressure (A or B line).						
AA [cm²]	1,43	3,46	5,30	8,04	13,85	30,19	35,68
AB (% of AA)	58,6	41,7	51,5	56,3	41,7	46,34	49,75
ABP (% of AA)	107,0	90,5	85,2	87,9	97,8	30,74	28,40
AAP (% of AA)	265,6	232,2	236,7	244,1	239,2	177,0	178,20
AA / (AA + AB) poppet ratio	0,6					0,68	
AAP / (AA + AB) piloting ratio	1,6					1,2	1,19

14 SEALS AND HYDRAULIC FLUID - for other fluids not included in below table, consult our technical office

Seals, recommended fluid temperature	NBR seals (standard) = -20°C ÷ +80°C, with HFC hydraulic fluids = -20°C ÷ +50°C FKM seals (/PE option) = -20°C ÷ +80°C		
Recommended viscosity	15÷100 mm²/s - max allowed range 2,8 ÷ 500 mm²/s		
Max fluid contamination level	ISO4406 class 20/18/15 NAS1638 class 9, see also filter section at www.atos.com or KTF catalog		
Hydraulic fluid	**Suitable seals type**	**Classification**	**Ref. Standard**
Mineral oils	NBR, FKM	HL, HLP, HLPD, HVLP, HVLPD	DIN 51524
Flame resistant without water	FKM	HFDU, HFDR	ISO 12922
Flame resistant with water	NBR	HFC	

15 COILS CHARACTERISTICS

Insulation class	Pilot valve **E**, **EP**: **H** (180°C) for DC coils **F** (155°C) for AC coils Due to the occuring surface temperatures of the solenoid coils, the European standards EN ISO 13732-1 and EN ISO 4413 must be taken into account
Protection degree to DIN EN 60529	**IP 65** (with connectors 666, 667, 669 correctly assembled)
Relative duty factor	100%
Supply voltage and frequency	See electric feature 10
Supply voltage tolerance	± 10%
Certification	**cURus** North American Standard

16 COIL VOLTAGE

External supply nominal voltage ± 10%	**Voltage code** (1)	-EX, -EPX (DHE, DHEP) Power consumption (3)	-EPX (DKE, DKEP) Power consumption (3)	-EX, -EPX (DHE, DHEP) Code of spare coil pilot valve	-EX, -EPX (DKE, DKEP) Code of spare coil pilot valve
12 DC	**12 DC**	30W	36W	COE-12DC	CAE-12DC
24 DC	**24 DC**			COE-24DC	CAE-24DC
110 DC	**110 DC**			COE-110DC	CAE-110DC
220 DC	**220 DC**			COE-220DC	CAE-220DC
110/50 AC (2)	**110/50/60 AC**	58VA (4)	-	COE-110/50/60AC	-
110/50/60 AC		-	100VA (4)	-	CAE-110/50/60AC
115/60 AC (2)	**115/60 AC**	80VA (4)	130VA (4)	COE-115/60AC	CAE-115/60AC
230/50 AC (2)	**230/50/60 AC**	58VA (4)	-	COE-230/50/60AC	-
230/50/60 AC		-	100VA (4)	-	CAE-230/50/60AC
230/60 AC	**230/60 AC**	80VA (4)	130VA (4)	COE-230/60AC	CAE-230/60AC

(1) For other supply voltages available on request see technical tables of specific pilot solenoid valve.
(2) Coil can be supplied also with 60 Hz of voltage frequency: in this case the performances are reduced by 10 ÷ 15% and the power consumption is 58 VA (DHE*), 90 VA (DKE*)
(3) Average values based on tests performed at nominal hydraulic condition and ambient/coil temperature of 20°C.
(4) When solenoid is energized, the inrush current is approx 3 times the holding current.

17 COILS ELECTRIC CONNECTORS FOR PILOT SOLENOID VALVES according to DIN EN 175201-804 (ex DIN 43651), to be ordered separately

666, 667 (for AC or DC supply)	**669** (for AC supply)	**CONNECTOR WIRING**	
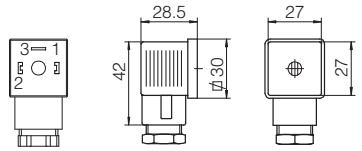	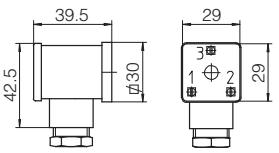	**666, 667** 1 = Positive ⊕ 2 = Negative ⊖ ⊕ = Coil ground	**669** 1,2= Supply voltage VAC 3 = Coil ground
		SUPPLY VOLTAGES	
		666 All voltages	**667** 24 AC or DC 110 AC or DC 220 AC or DC
			669 110/50 AC 110/60 AC 230/50 AC 230/60 AC

18 TECHNICAL CHARACTERISTICS OF /FI INDUCTIVE PROXIMITY SENSOR

Valve type	**LIFI, LIDA*/FI, LIDAS*/FI**	**/FI** scheme	Connector type **BKS-B-20-4-03**
Type of switch	**/FI** proximity sensor	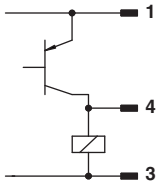	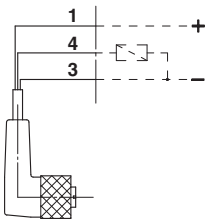
Supply voltage [V]	10÷30		
Ripple max [%]	≤ 20		
Max current [mA]	200		
Max peak pressure [bar]	500	**1** supply +24 VDC **3** GND **4** output signal	**1** (brown) = supply +24 VDC **3** (blue) = GND **4** (black) = output signal CABLE LENGHT = 3 m
Mechanical life	virtually infinite		
Switch logic	PNP		

19 TECHNICAL CHARACTERISTICS OF /FV POSITION SWITCH

Valve type	**LIDA*/FV, LIDAS*/FV**	**/FV** scheme	Connector type **ZBE-06** IP65
Type of switch	**/FV** proximity sensor	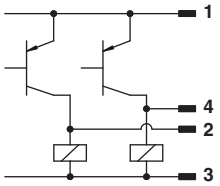	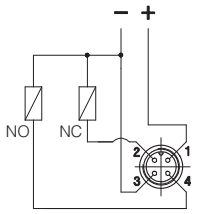
Supply voltage [V]	20÷32		
Ripple max [%]	≤ 10		
Max current [mA]	400		
Max peak pressure [bar]	400	**1** supply +24 VDC **2** output signal **3** GND **4** output signal	**1** = supply +24 VDC **2** = output signal NC **3** = GND **4** = output signal NO
Mechanical life	virtually infinite		
Switch logic	PNP		

20 STATUS OF OUTPUT SIGNALS

A: overlapping stroke
B: damping stroke

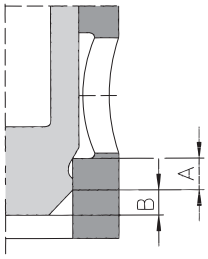

According the criteria of safety specifications, the poppet position signal must change its status inside the overlapping stroke (before the effective valve opening).

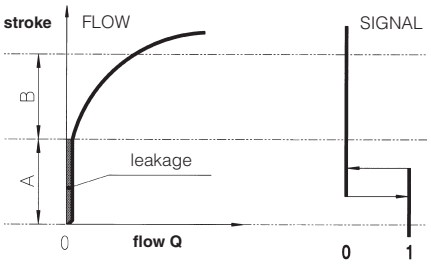

WARNING: the inobservance of following prescriptions invalidates the certification and may represent a risk for personnel injury

Safety valves must be installed and commissioned only by qualified personnel
Safety valves must not be disassembled
The inductive proximity FI or the inductive position switch FV can be adjusted only by the valve's manufacturer or Atos authorized service centers
Valve's components cannot be interchanged
The valves must operate without switching shocks and spool vibrations

21 Q/Δp DIAGRAMS based on mineral oil ISO VG 46 at 50 °C

21.1 Q/Δp DIAGRAMS of LIFI

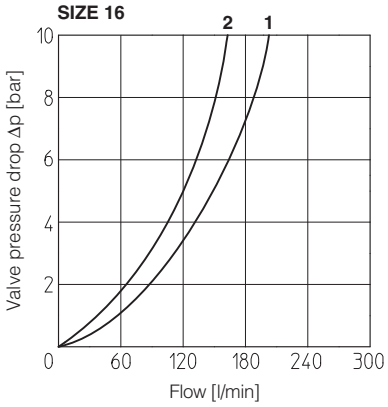

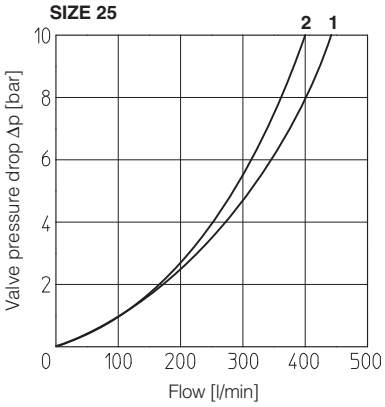

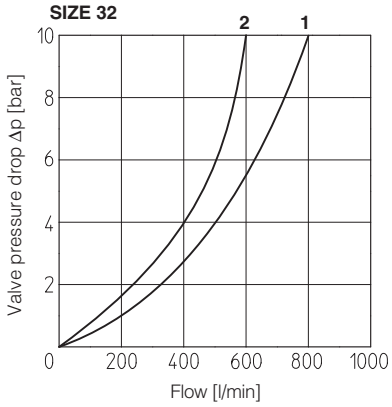

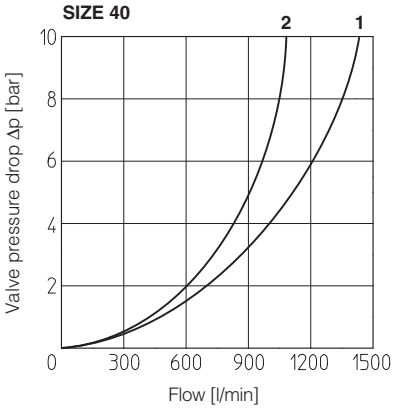

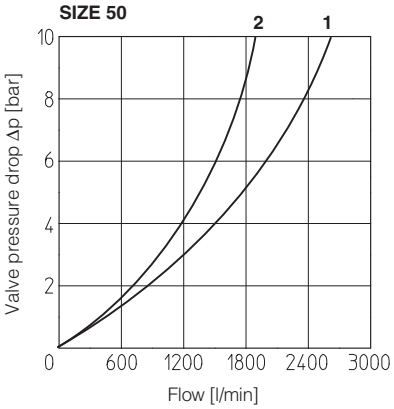

1 = poppet type 42
2 = poppet type 43

21.2 Q/Δp DIAGRAMS of LIDA /FV and LIDAH /FV

SIZE 16

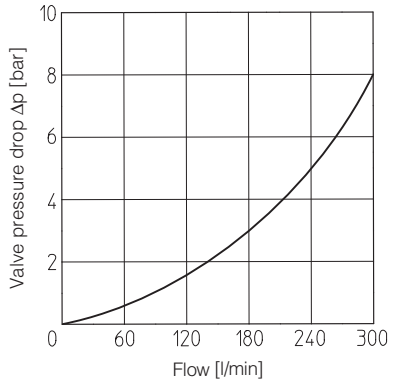

SIZE 25

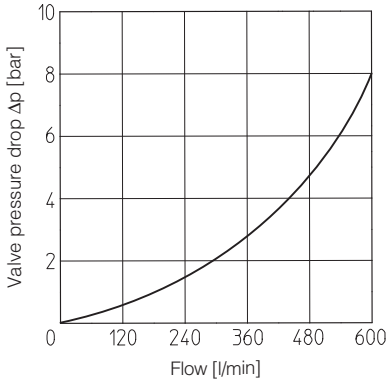

SIZE 32

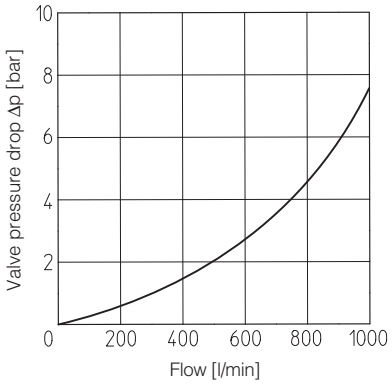

SIZE 40

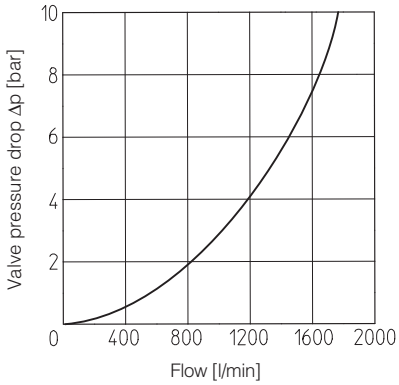

SIZE 50

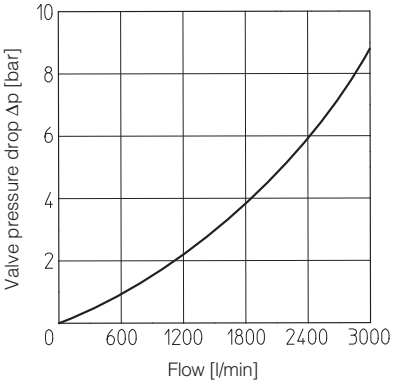

21.3 Q/Δp DIAGRAMS of LIDA /FI

SIZE 63

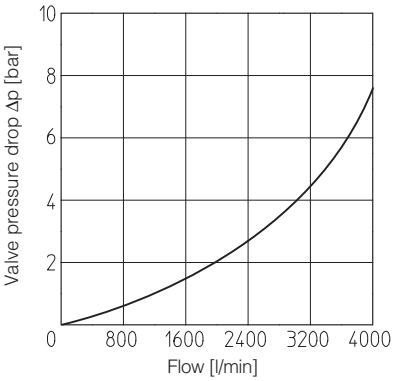

SIZE 80

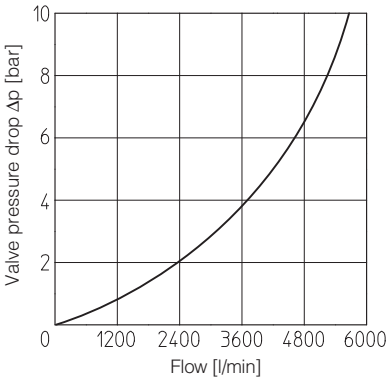

SIZE 100

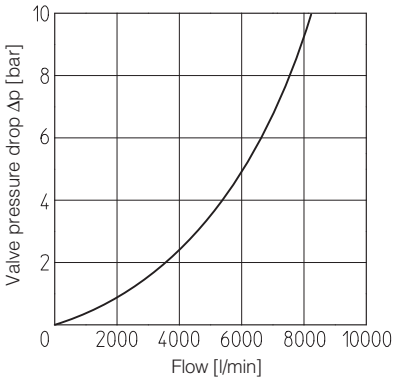

21.4 Q/Δp DIAGRAMS OF LIDAS /FV and LIDASH /FV

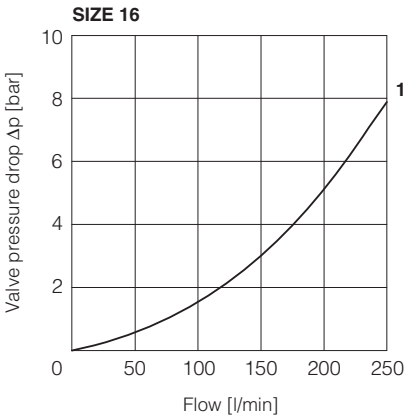

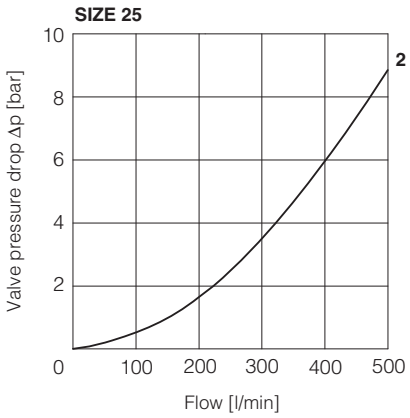

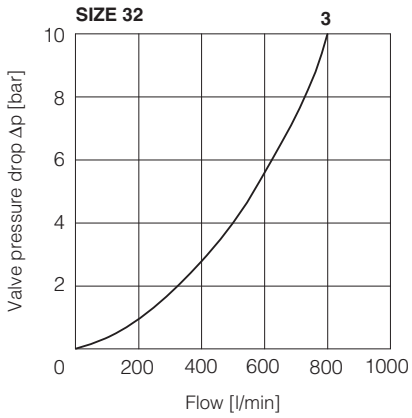

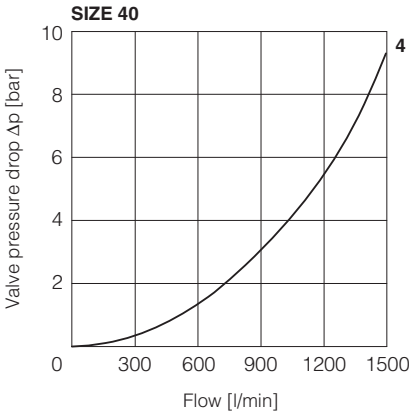

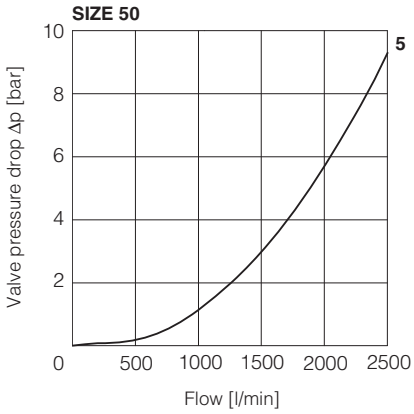

21.5 Q/Δp DIAGRAMS OF LIDASH/FI

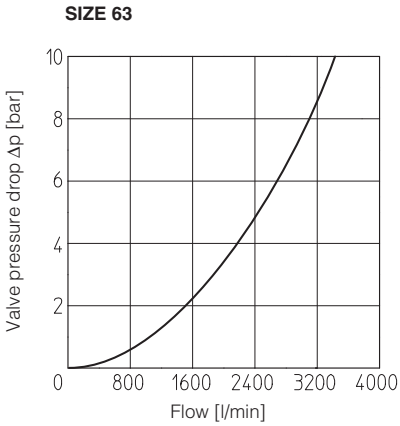

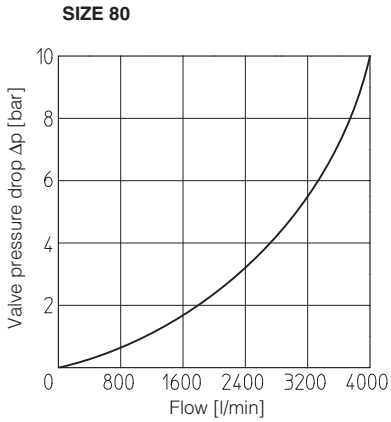

22 INSTALLATION DIMENSIONS of LIFI [mm]

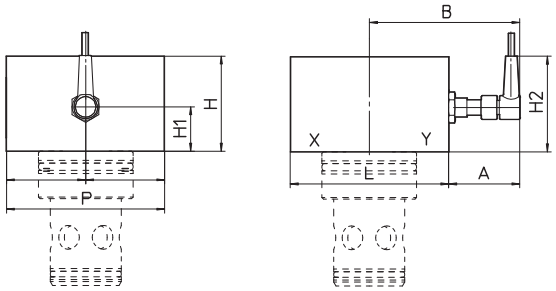

	A	B	H	H1	H2	L	P
LIFI-16	54,5	94	50	25	56	72	65
LIFI-25	54,5	97	55	28	59	85	85
LIFI-32	47	97	60	28	59	100	100
LIFI-40	41	103,5	60	30	61	125	125
LIFI-50	44	114	70	30	61	140	140

Note: for cover interface and cavity dimensions ISO 7368, see table P006

23 INSTALLATION DIMENSIONS of LIDA /FV and LIDA /FI [mm]

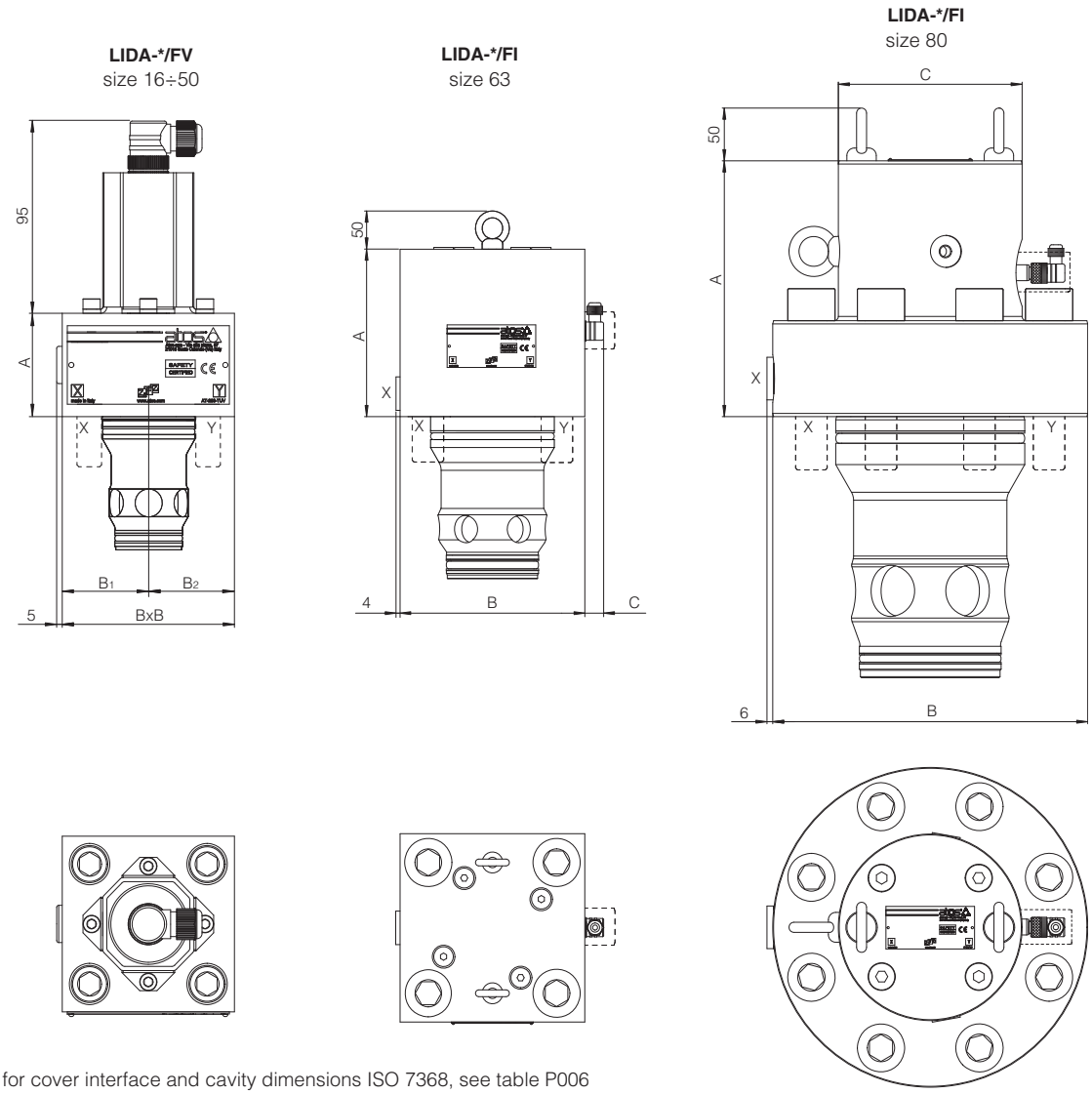

Note: for cover interface and cavity dimensions ISO 7368, see table P006
Ports Z_1, Z_2 not connected

Size	A	B	B1	B2	C	Seal	connection port X	Fastening bolts class 12.9	Mass (Kg)
16	56	65x72	32.5	32.5	-	4 OR 108	G1/4”	N°4 M8x50 35 Nm	2,7
25	60	85	42.5	42.5	-	4 OR 108	G1/4”	N°4 M12x60 125 Nm	4,5
32	70	100	50	50	-	4 OR 2043	G1/4”	N°4 M16x70 300 Nm	6,7
40	91.5	125	62.5	62.5	-	4 OR 3043	G1/4”	N°4 M20x80 600 Nm	13,7
50	95	140	70	70	-	4 OR 3043	G1/4”	N°4 M20x80 600 Nm	14,5
63	160	180	-	-	34	1 OR 3050	G3/4”	N°4 M30x120 2100 Nm	41
80	200	Ø250	-	-	160	1 OR 4075	G1/2”	N°8 M24x120 1000 Nm	60
100	240	Ø300	-	-	175	1 OR 4087	G1/2”	N°8 M30x140 2100 Nm	120

24 INSTALLATION DIMENSIONS of LIDAH /FV [mm] (with pilot solenoid valve)

LIDAH-*/FV

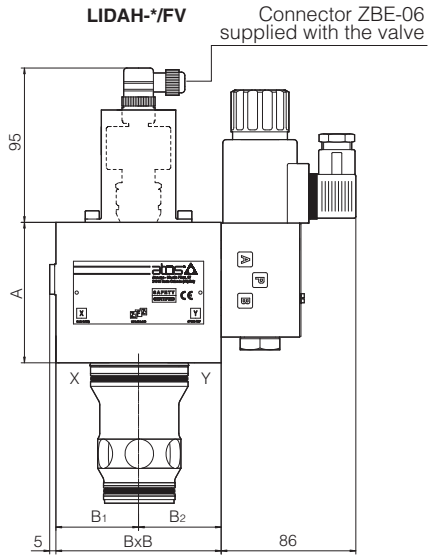

Note: for cover interface and cavity dimensions ISO 7368, see table P006

Size	A	B	B1	B2	Seal	connection port X	Fastening bolts class 12.9	Mass (Kg)
16	80	65x72	32.5	32.5	4 OR 108	G1/4”	N°4 M8x90 35 Nm	4,5
25	80	85	42.5	42.5	4 OR 108	G1/4”	N°4 M12x80 125 Nm	7,0
32	85	100	50	50	4 OR 2043	G1/4”	N°4 M16x70 300 Nm	8,2
40	91.5	125	62.5	62.5	4 OR 3043	G1/4”	N°4 M20x80 600 Nm	14,2
50	95	140	70	70	4 OR 3043	G1/4”	N°4 M20x80 600 Nm	16

25 INSTALLATION DIMENSIONS of LIDAS /FV [mm]

LIDAS-*/FV

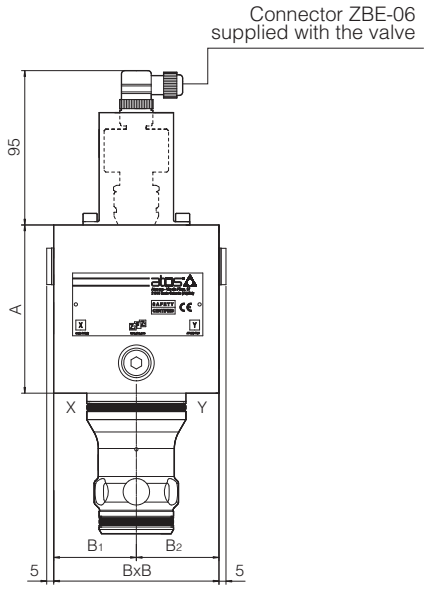

Note: for cover interface and cavity dimensions ISO 7368, see table P006

Size	A	B	B1	B2	Seal	connection port X, Y, Z1, Z2	Fastening bolts class 12.9	Mass (Kg)
16	85	65	39.5	39.5	4 OR 108	G1/8”	N°4 M8x80 35 Nm	3
25	102	85	42.5	42.5	4 OR 108	G1/8”	N°4 M12x95 125 Nm	5,9
32	104	100	50	50	4 OR 2043	G3/8”	N°4 M16x90 300 Nm	7,5
40	111	125	62.5	62.5	4 OR 2043	G3/8”	N°4 M20x70 600 Nm	14,7
50	135	140	70	70	4 OR 2043	G3/8”	N°4 M20x80 600 Nm	19,7

26 INSTALLATION DIMENSIONS of LIDASH /FV and LIDASH /FI [mm] (with pilot solenoid valve)

LIDASH-*/FV
size 16÷50

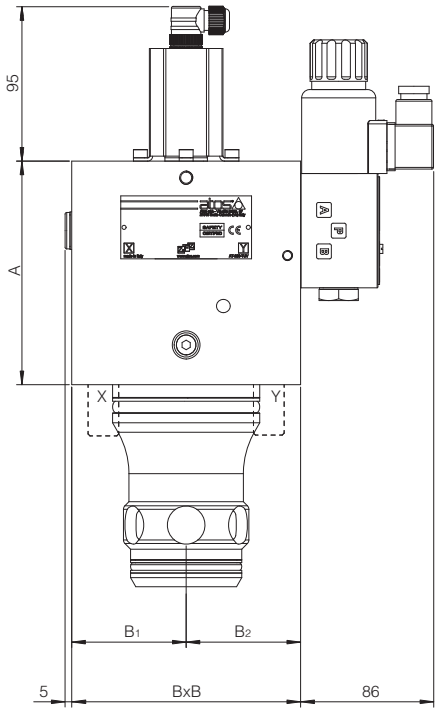

LIDASH-*/FI
size 63 and 80

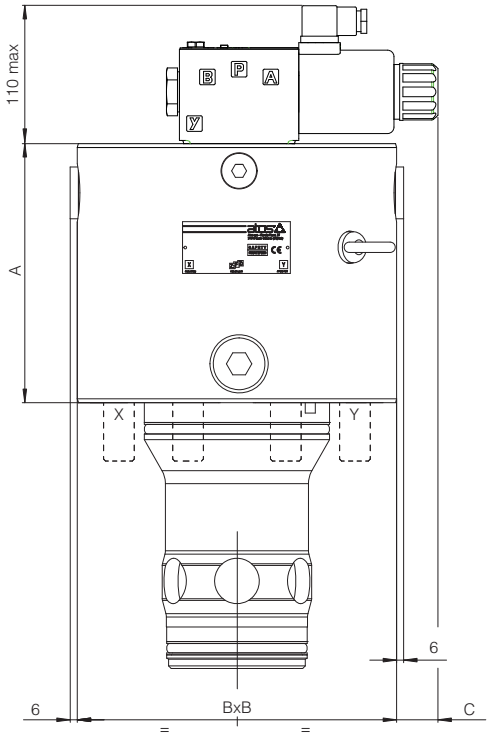

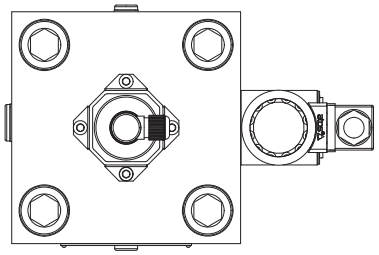

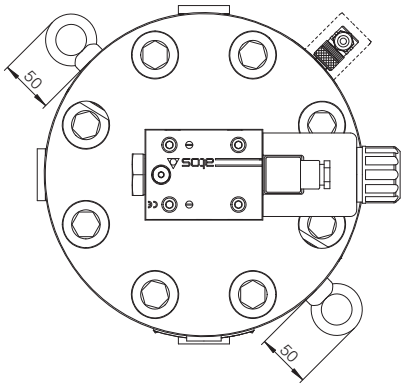

Note: for cover interface and cavity dimensions ISO 7368, see table P006

Size	A	B	B1	B2	C (max)	Seal	connection port X, Z1, Z2	Fastening bolts class 12.9	Mass (Kg)
16	96	65x72	32.5	39.5	-	4 OR 108	G1/8”	N°4 M8x80 35 Nm	4,6
25	115	85	42.5	42.5	-	4 OR 108	G1/8”	N°4 M12x95 125 Nm	7,6
32	116	100	50	50	-	4 OR 2043	G3/8”	N°4 M16x90 300 Nm	9,1
40	125	125	62.5	62.5	-	4 OR 2043	G3/8”	N°4 M20x70 600 Nm	15,8
50	135	140	70	70	-	4 OR 2043	G3/8”	N°4 M20x80 600 Nm	20,8
63	192	180	-	-	65	4 OR 3050	(X, Y, Z1, Z2) G3/8”	N°4 M30x120 2100 Nm	51
80	200	Ø250	-	-	15	4 OR 4106	(X, Y, Z1, Z2) G1”	N°8 M24x100 1000 Nm	80

Safety pressure relief valves

direct, screw-in, conforming to PED Directive 2014/68/EU - certified by DEKRA

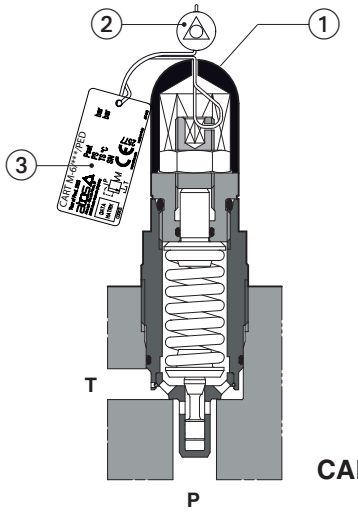

CART M-6/420/PED

① plastic cap
② lead sealing
③ nameplate with factory pressure setting

CART /PED

Safety pressure relief valves, certified by DEKRA according to Pressure Equipment Directive 2014/68/EU (PED).

They are designed to operate as safety components, limiting the maximum system pressure or to protect parts of the hydraulic circuit and accumulators from overpressure.

The valves are factory set at the pressure level required by the costumer, see section 6.

The pressure adjustment screw is protected with a lead sealed plastic cap to avoid any tampering.

The screw-in execution is specifically designed to reduce the dimension of blocks and manifolds, without penalizing the functional characteristics.

Size: **G1/2" ÷ M35**
Max flow: **2,5 ÷ 150 l/min**
Max pressure: up to **420 bar**

1 MODEL CODE

CART	M-6	/	420	/	PED	/	280	*	/	*

CART: Safety pressure relief valves, screw-in

M-6:
Size:
M-3 = G1/2 **(1)**
M-4 = M14x1
M-5 = M20x1,5
M-6 = M33x1,5 **(1)**
ARE-15 = M32x1,5
ARE-20 = M35x1,5 **(1)**

420:
Max pressure:
420 = 420 bar

PED = EU Type examination to 2014/68/EU - certified by DEKRA

280:
Factory pressure setting (bar):
to be defined by the customer
min step 1 bar (example **280** = 280 bar)
min pressure setting:
25 = for CART-M* and CART ARE-15
30 = for CART ARE-20

*****: Series number

*****:
Seals material, see section 5:
- = NBR
PE = FKM
BT = HNBR

(1) Available also in stainless steel execution, see technical table CWY010

2 HYDRAULIC SYMBOL

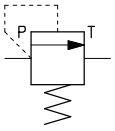

CART* /PED

3 GENERAL CHARACTERISTICS

Assembly position	Any position
Cavity	See section 9
MTTFd values according to EN ISO 13849	150 years, for further details see technical table P007
Ambient temperature range	**Standard** = -30°C ÷ +80°C **/PE** option = -20°C ÷ +80°C **/BT** option = -40°C ÷ +70°C
Storage temperature range	**Standard** = -30°C ÷ +80°C **/PE** option = -20°C ÷ +80°C **/BT** option = -40°C ÷ +70°C
Surface protection	Zinc coating with black passivation - salt spray test (EN ISO 9227) > 200h
Compliance	PED Directive 2014/68/EU - EU type-examination certificate **(1)** RoHS Directive 2011/65/EU as last update by 2015/863/EU REACH Regulation (EC) n°1907/2006

(1) The type-examination certificate can be download from www.atos.com

4 HYDRAULIC CHARACTERISTICS

Valve model	CART M-3	CART M-4	CART M-5	CART M-6	CART ARE-15	CART ARE-20
Max pressure [bar] on port P	420	420	420	420	420	420
Factory pressure setting range [bar]	25÷420	25÷420	25÷420	25÷420	25÷420	30÷420
Max pressure on port T [bar] **(1)**	50	50	50	50	50	50
Max flow [l/min] **(2)**	2,5	15	50	60	100	150

(1) The valves should be operated without counterpressure on T line, see note 2 at section 8
(2) Max flow without conterpressure on T line, see diagrams at section 8 for max ammissible flow

5 SEALS AND HYDRAULIC FLUIDS - for other fluids not included in below table, consult our technical office

Seals, recommended fluid temperature	NBR seals (standard) = -20°C ÷ +80°C, with HFC hydraulic fluids = -20°C ÷ +50°C FKM seals (/PE option) = -20°C ÷ +80°C HNBR seals (/BT option) = -40°C ÷ +60°C, with HFC hydraulic fluids = -40°C ÷ +50°C		
Recommended viscosity	15÷100 mm²/s - max allowed range 2,8 ÷ 500 mm²/s		
Max fluid contamination level	ISO 4406 class 20/18/15 NAS 1638 class 9, see also filter section www.atos.com or KTF catalog		
Hydraulic fluid	**Suitable seals type**	**Classification**	**Ref. Standard**
Mineral oils	NBR, FKM, HNBR	HL, HLP, HLPD, HVLP, HVLPD	DIN 51524
Flame resistant without water	FKM	HFDU, HFDR	ISO 12922
Flame resistant with water	NBR, HNBR	HFC	

6 FACTORY PRESSURE SETTING

The /PED valves are factory set at the pressure level required by the costumer (min step: 1bar). The factory pressure setting is performed at the flow shown in the following table. The factory pressure setting is marked on the valve nameplate, see section 7

VALVE MODEL	FLOW FOR FACTORY PRESSURE SETTING (l/min)
CART M-3	0.5
CART M-4	0.5
CART M-5	2
CART M-6	2
CART ARE-15	2
CART ARE-20	2

⚠ Any tampering of the lead sealing invalidates the certification

7 NAMEPLATE MARKING

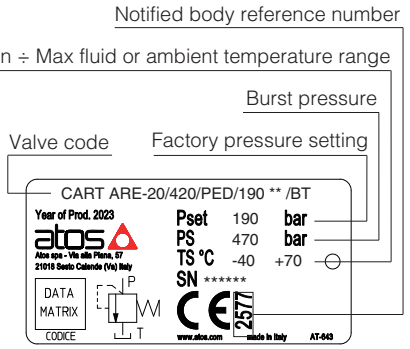

Note: **TS** values are referred to the extreme temperatures, regardless of whether the fluid or the ambient

8 PERMITTED WORKING RANGE (based on mineral oil ISO VG 46 at 50°C)

CART M-3 **/PED

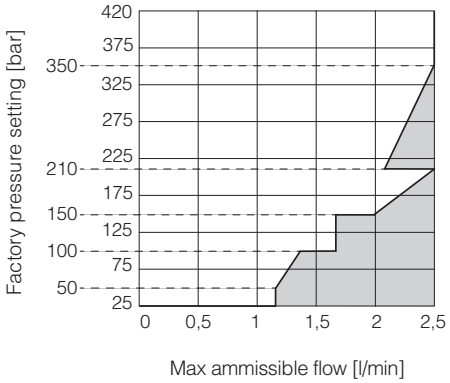

CART M-4 **/PED

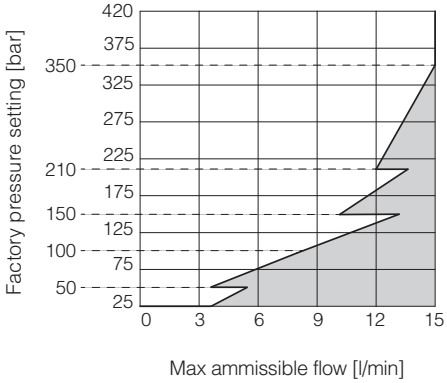

CART M-5 **/PED

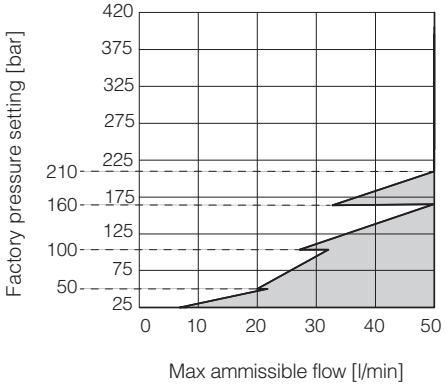

CART M-6 **/PED

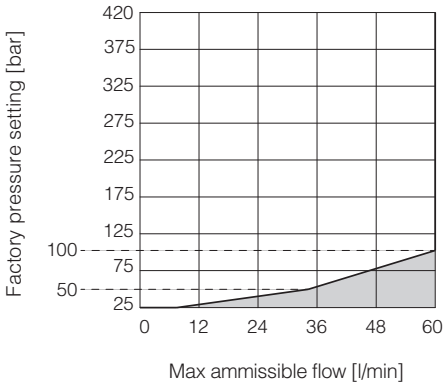

CART ARE-15 **/PED

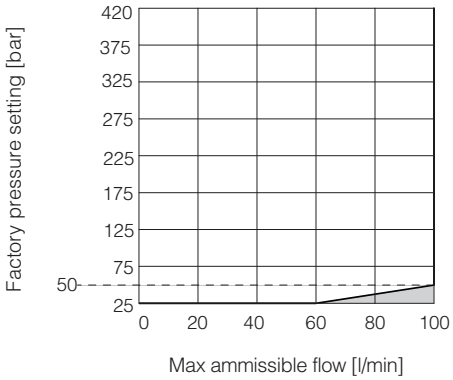

CART ARE-20 **/PED

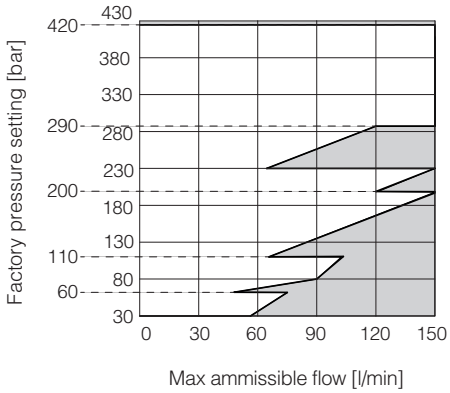

Notes:

1) The valves can operate only in the white area of the above diagrams.
The max admissible flow values within the white area are those for which the pressure increase remains within **+10% with respect to the factory pressure setting.**
Pressure / flow values located in gray areas cannot be performed.

⚠ Before ordering the valve, check that the maximum admissible flow at the required pressure setting, is greater than the maximum flow rate of the system or the accumulator to be protected.

2) The working range in above diagrams is valid without counterpressure in T line.
The factory pressure setting is increased by the counterpressure valve in T line.
As general rule PED valves should be operated without counter pressure in the T line.
In case of counter pressure in T line, the maximum admissible flow has to be reduced with respect to the values reported in the diagram, so as not to exceed the limit of +10% with respect to the factory pressure setting. Contact Atos technical office for details.

9 CAVITY AND INSTALLATION DIMENSIONS [mm]

CART M-3

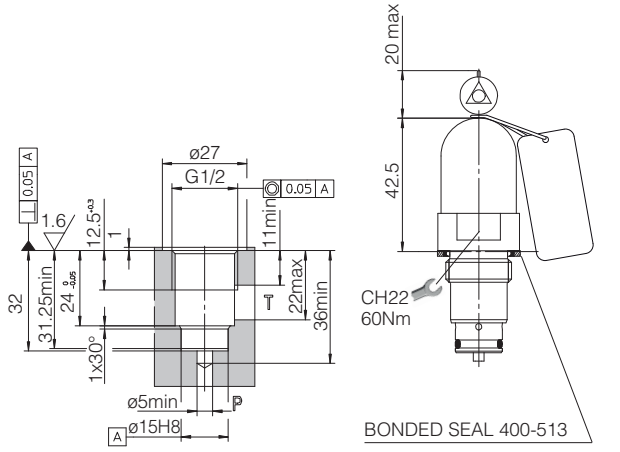

Mass [kg]	0,12

CART M-4

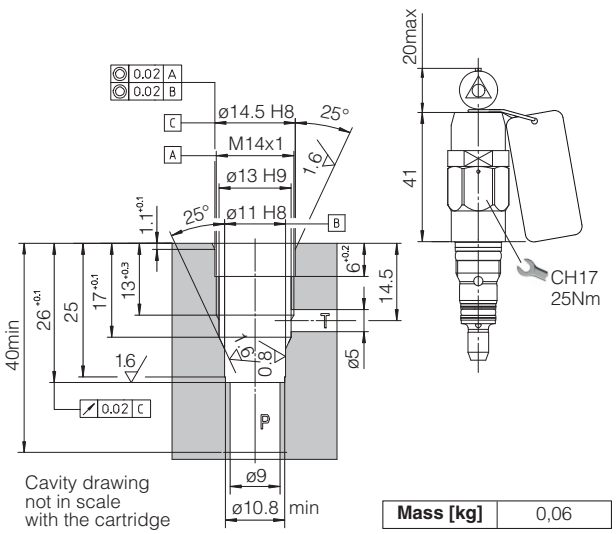

Mass [kg]	0,06

CART M-5

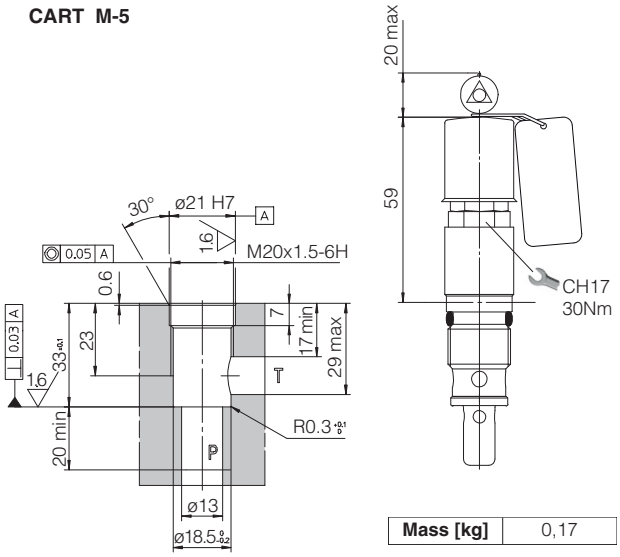

Mass [kg]	0,17

CART M-6

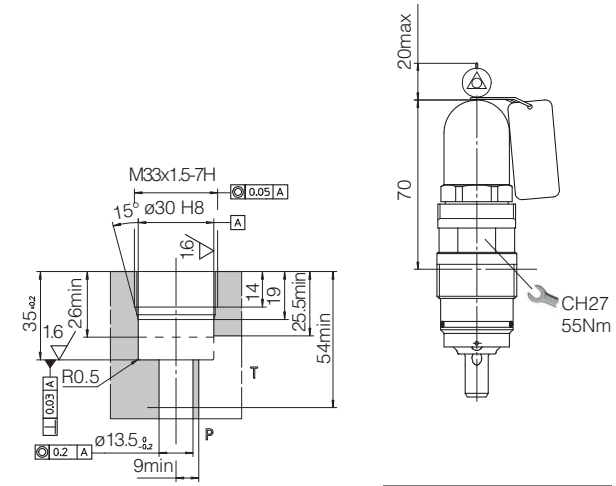

Mass [kg]	0,37

CART ARE-15

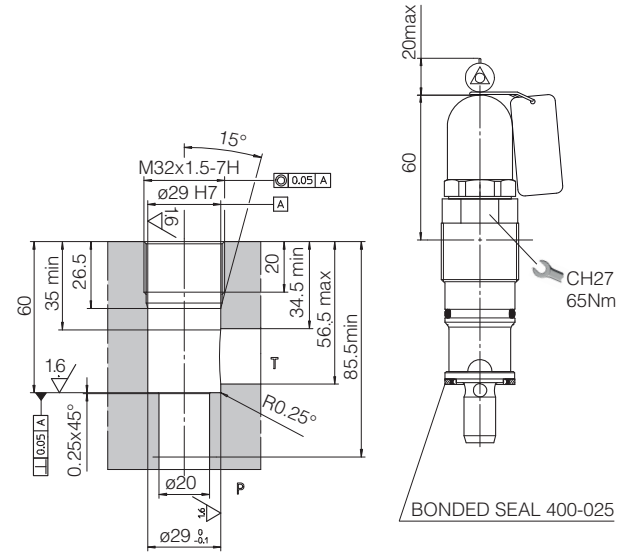

Mass [kg]	0,7

CART ARE-20

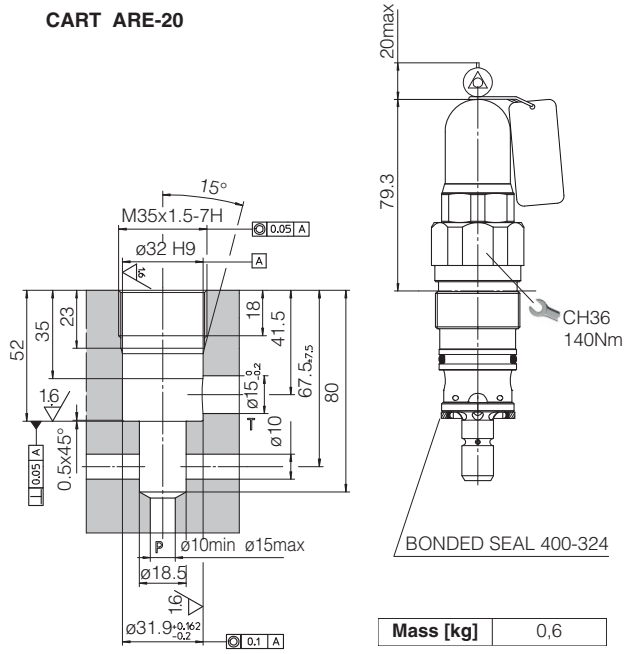

Mass [kg]	0,6

10 RELATED DOCUMENTATION

CY900	Operating and maintenance information for PED certified valves

Safety pressure relief valves

in line, direct, conforming to PED Directive 2014/68/EU - certified by DEKRA

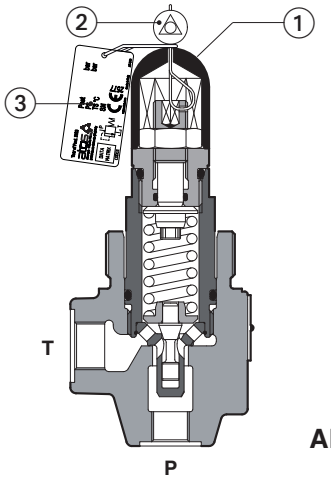

ARE-06/420/PED

① plastic cap
② lead sealing
③ nameplate with factory pressure setting

ARE /PED

Safety pressure relief valves, certified by DEKRA according to Pressure Equipment Directive 2014/68/EU (PED).

They are designed to operate as safety components, limiting the maximum system pressure or to protect parts of the hydraulic circuit and accumulators from overpressure.

The valves are provided with threaded ports for in-line mounting.

The valves are factory set at the pressure level required by the costumer, see section 6.

The pressure adjustment screw is protected with a lead sealed plastic cap to avoid any tampering.

ARE-06: Size: **G 1/4**"
Max flow: **60 l/min**
Max pressure: **420 bar**

ARE-15: Size: **G 1/2**"
Max flow: **100 l/min**
Max pressure: **420 bar**

1 MODEL CODE

ARE	-	06	/	420	/	PED	/	280	*	/	*

ARE: Safety pressure relief valves, in-line

06: **Size:**
06 = Port P G 1/4"
15 = Port P G 1/2"

420: **Max pressure**:
420 = 420 bar

PED = EU Type examination to 2014/68/EU - certified by DEKRA

280: **Factory pressure setting** (bar):
to be defined by the customer
min step 1 bar (example **280** = 280 bar)
min pressure setting 25 bar

*****: Series number

*****: **Seals material,** see section 5:
- = NBR
PE = FKM
BT = HNBR:

2 HYDRAULIC SYMBOL

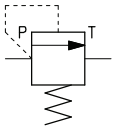

ARE-06* /PED

ARE-15* /PED

3 GENERAL CHARACTERISTICS

Assembly position	Any position
MTTFd values according to EN ISO 13849	150 years, for further details see technical table P007
Ambient temperature range	**Standard** = -30°C ÷ +80°C **/PE** option = -20°C ÷ +80°C **/BT** option = -40°C ÷ +70°C
Storage temperature range	**Standard** = -30°C ÷ +80°C **/PE** option = -20°C ÷ +80°C **/BT** option = -40°C ÷ +70°C
Surface protection	Zinc coating with black passivation - salt spray test (EN ISO 9227) > 200h
Compliance	PED Directive 2014/68/EU - EU type-examination certificate **(1)** RoHS Directive 2011/65/EU as last update by 2015/863/EU REACH Regulation (EC) n°1907/2006

(1) The type-examination certificate can be download from www.atos.com

4 HYDRAULIC CHARACTERISTICS

Valve model		**ARE-06**	**ARE-15**
Max pressure on port P	[bar]	420	420
Factory pressure setting range	[bar]	25÷420	25÷420
Max pressure on port T **(1)**	[bar]	50	50
Max flow **(2)**	[l/min]	60	100

(1) Ped valves should be operated without counterpressure on T line, see note 2 at section 8
(2) For PED valves see diagrams at section 8

5 SEALS AND HYDRAULIC FLUIDS - for other fluids not included in below table, consult our technical office

Seals, recommended fluid temperature	NBR seals (standard) = -20°C ÷ +80°C, with HFC hydraulic fluids = -20°C ÷ +50°C FKM seals (/PE option) = -20°C ÷ +80°C HNBR seals (/BT option) = -40°C ÷ +60°C, with HFC hydraulic fluids = -40°C ÷ +50°C		
Recommended viscosity	15÷100 mm^2/s - max allowed range 2,8 ÷ 500 mm^2/s		
Max fluid contamination level	ISO 4406 class 20/18/15 NAS 1638 class 9, see also filter section www.atos.com or KTF catalog		
Hydraulic fluid	**Suitable seals type**	**Classification**	**Ref. Standard**
Mineral oils	NBR, FKM, HNBR	HL, HLP, HLPD, HVLP, HVLPD	DIN 51524
Flame resistant without water	FKM	HFDU, HFDR	ISO 12922
Flame resistant with water	NBR, HNBR	HFC	

6 FACTORY PRESSURE SETTING

The /PED valves are factory set at the pressure level required by the costumer (min step: 1bar). The factory pressure setting is performed at the flow shown in the following table. The factory pressure setting is marked on the valve nameplate, see section 7

VALVE MODEL	**FLOW FOR FACTORY PRESSURE SETTING (l/min)**
ARE-06	2
ARE-15	2

⚠ Any tampering of the lead sealing invalidates the certification

7 NAMEPLATE MARKING

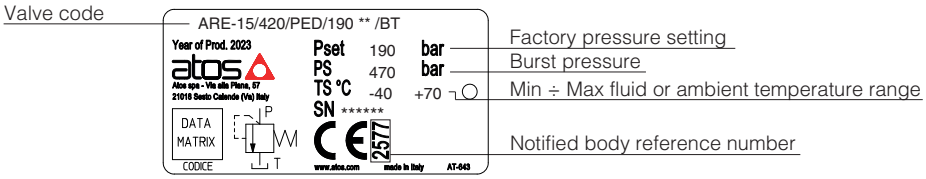

Note: **TS** values are referred to the extreme temperatures, regardless of whether the fluid or the ambient

8 PERMITTED WORKING RANGE (based on mineral oil ISO VG 46 at 50°C)

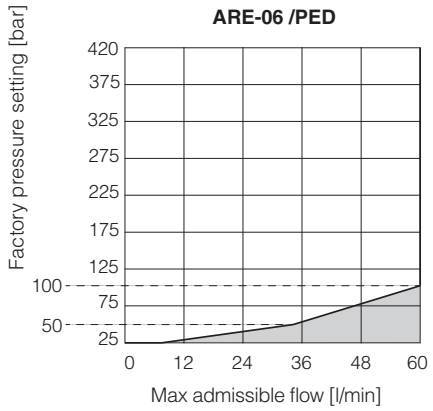

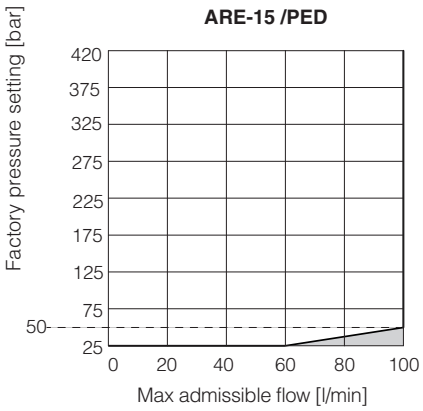

Notes:

1) The valves can operate only in the white area of the above diagrams.
The max admissible flow values within the white area are those for which the pressure increase remains within **+10% with respect to the factory pressure setting.**
Pressure / flow values located in gray areas cannot be performed.

⚠ Before ordering the valve, check that the maximum admissible flow at the required pressure setting, is greater than the maximum flow rate of the system or the accumulator to be protected.

2) The working range in above diagrams is valid without counterpressure in T line.
The factory pressure setting is increased by the counterpressure valve in T line.
As general rule PED valves should be operated without counter pressure in the T line.
In case of counter pressure in T line, the maximum admissible flow has to be reduced with respect to the values reported in the diagram, so as not to exceed the limit of +10% with respect to the factory pressure setting. Contact Atos technical office for details.

9 INSTALLATION DIMENSIONS [mm]

ARE-06

P = INLET PORT G 1/4”
T = OUTLET PORT G 3/8”
Locking ring for fastening the valve.
Model code: SP-6-RE-310030

Mass [kg]	
ARE-06	1,0

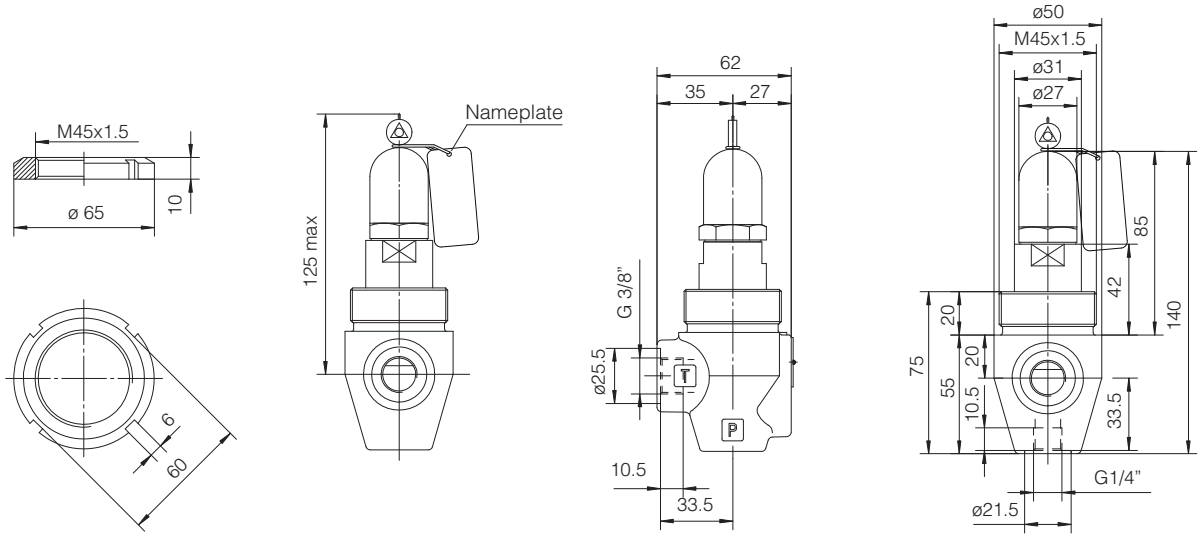

ARE-15

P = INLET PORT G 1/2”
T = OUTLET PORT G 1/2”
Locking ring for fastening the valve.
Model code: SP-6-RE-310030

Mass [kg]	
ARE-15	1,3

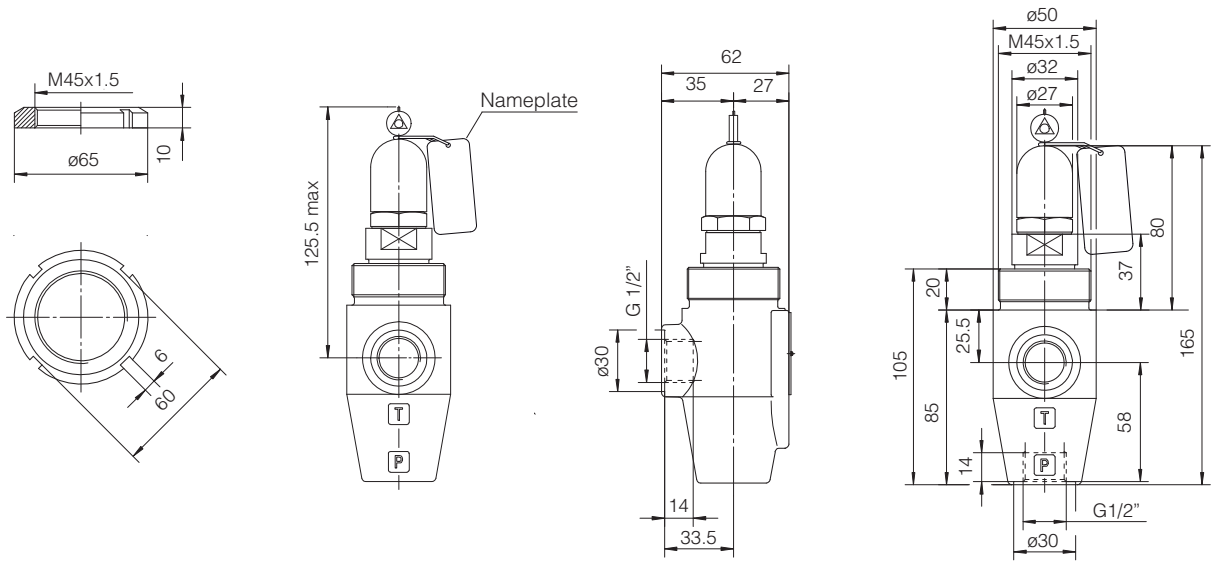

10 RELATED DOCUMENTATION

CY900	Operating and maintenance information for PED certified valves

Safety pressure relief valves

piloted, in-line, conforming to PED Directive 2014/68/EU - certified by DEKRA

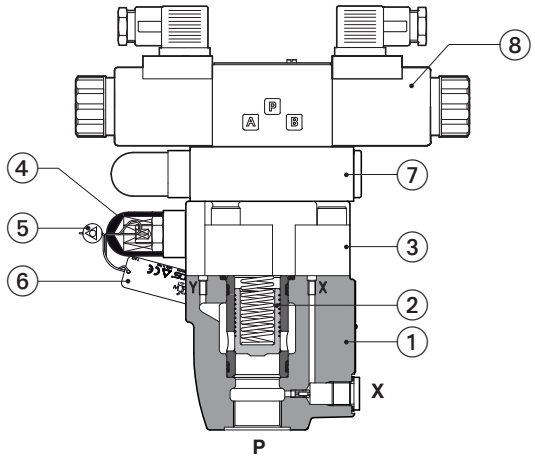

① main body
② poppet
③ pilot stage
④ plastic cap
⑤ lead sealing
⑥ nameplate with factory pressure setting
⑦ second /third pressure setting
⑧ pilot solenoid valve for pressure selection

ARAM-20/20/*/PED

ARAM /PED

Safety pressure relief valves, certified by DEKRA according to Pressure Equipment Directive 2014/68/EU (PED).

They are designed to operate as safety components, limiting the maximum system pressure or to protect parts of the hydraulic circuit and accumulators from overpressure.

The valves are factory set at the pressure level required by the costumer, see section 10.

The pressure adjustment screw is protected with a lead sealed plastic cap to avoid any tampering.

ARAM can be equipped with a pilot solenoid valve for venting or for multiple pressure selection.

Size: **G 3/4"** and **G 1 1/4"**
Max flow: **400** and **600 l/min**
Max pressure: **420 bar**

1 MODEL CODE

ARAM - 20 / 20 / 420 / 210/100 / E / PED / 280 - EP X 24DC * / *

ARAM: Piloted pressure relief valve, in-line

Valve size ISO 6264:
20 = port P - G 3/4"
32 = port P - G 1 1/4"

Configuration, see section 2 :
- = without pilot solenoid valve
10, 11:
with pilot solenoid valve for venting
20, 21, 22, 32:
with pilot solenoid valve for multiple pressure selection

Max pressure:
420 = 420 bar

Pressure range of second / third setting (1):
50 = 50 bar **100** = 100 bar
210 = 210 bar **350** = 350 bar **420** = 420 bar

Options, see section 9 :
E **WP** **Y**

PED = EU Type examination to 2014/68/EU - certified by DEKRA

Factory pressure setting (bar):
to be defined by the customer min step 1 bar
(example **280** = 280 bar)
min pressure setting 30 bar

Pilot valve (2):
EP= DHEP for AC and DC supply, high performances with **cURus** certified solenoids

X = without connector **(2)**:
Connectors to be ordered separately:
see section 7
-00-AC = AC solenoid valve without coils
-00-DC = DC solenoid valve without coils

Voltage code, see section 6 **(2)**:

Series number

Seals material, see section 8 :
- = NBR
PE = FKM
BT = HNBR

(1) Only for ARAM-* /20, /21, /22, /32; the set pressure cannot be higher than PED factory pressure setting
(2) Only for ARAM with pilot solenoid valve

2 CONFIGURATIONS AND HYDRAULIC SYMBOLS

ARAM

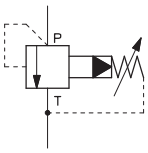

ARAM /E

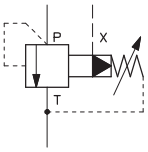

ARAM /Y

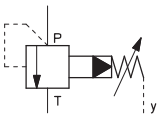

ARAM /EY

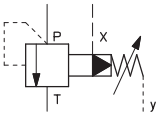

ARAM-/10**
one setting pressure + venting
with de-energized solenoid

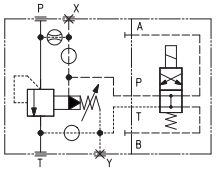

ARAM-/11**
one setting pressure + venting
with energized solenoid

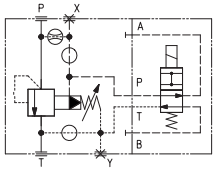

ARAM-/22**
two setting pressure
without venting

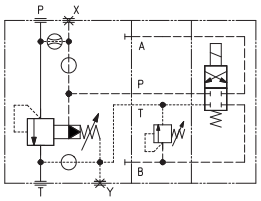

ARAM-/20**
two setting pressure + venting
with de-energized solenoid

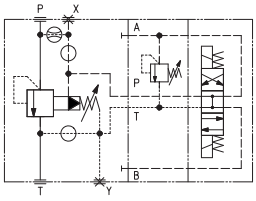

ARAM-/21**
two setting pressure + venting
with energized solenoid

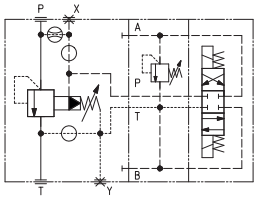

ARAM-/32**
three setting pressure
without venting

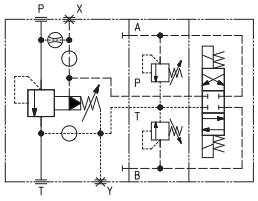

Example of complete hydraulic symbol of ARAM-**10 option /E, option /Y and option /EY

ARAM-/10** option **/E**

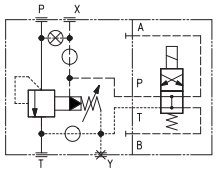

ARAM-/10** option **/Y**

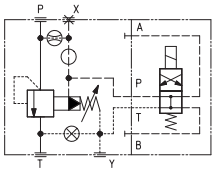

ARAM-/10** option **/EY**

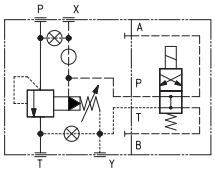

3 GENERAL CHARACTERISTICS

Assembly position / location		Any position
MTTFd values according to EN ISO 13849		75 years, for further details see technical table P007
Ambient temperature	Without pilot valve	**Standard** = -30°C ÷ +80°C **/PE** option = -20°C ÷ +80°C **/BT** option = -40°C ÷ +70°C
	With pilot valve	**Standard** = -30°C ÷ +70°C **/PE** option = -20°C ÷ +70°C **/BT** option = -40°C ÷ +70°C
Storage temperature range	Without pilot valve	**Standard** = -30°C ÷ +80°C **/PE** option = -20°C ÷ +80°C **/BT** option = -40°C ÷ +70°C
	With pilot valve	**Standard** = -30°C ÷ +70°C **/PE** option = -20°C ÷ +70°C **/BT** option = -40°C ÷ +70°C
Surface protection		Zinc coating with black passivation -salt spray test (EN ISO9227) > 200h
Compliance		PED Directive 2014/68/EU - EU type-examination certificate **(1)** RoHs Directive 2011/65/EU as last update by 2015/863/EU REACH Regulation (EC) n°1907/2006

(1) The type-examinatior certificate can be download from www.atos.com

4 HYDRAULIC CHARACTERISTICS

Valve model	**ARAM-20**	**ARAM-32**
Max pressure on ports P, X [bar]	420	
Max pressure on ports T, Y **(1)** [bar]	0 with internal drain 15 bar with external drain, option Y	
Factory pressure setting range [bar]	25÷420	
Max flow [l/min]	400	600

(1) PED valves must be operated without counterpressure in T line to comply with permessible range in section 12
A max counterpressure of 15 bar is allowed only with external drain configuration (option Y)

5 ELECTRICAL CHARACTERISTICS - for ARAM with pilot solenoid valve

Insulation class	**H** (180°C) for DC coils; **F** (155°C) for AC coils Due to the occuring surface temperatures of the solenoid coils, the European standards EN ISO 13732-1 and EN ISO 4413 must be taken into account
Protection degree to DIN EN 60529	**IP 65** (with connectors correctly assembled)
Relative duty factor	100%
Supply voltage and frequency	See section 6
Supply voltage tolerance	± 10%
Certification	**cURus** North American standard

6 COIL VOLTAGE - for ARAM with pilot solenoid valve

External supply nominal voltage ± 10%	**Voltage code**	Type of connector	Power consumption (2)	Code of spare coil
12 DC	**12 DC**	666 or 667	30 W	COE-12DC
14 DC	**14 DC**			COE-14DC
24 DC	**24 DC**			COE-24DC
28 DC	**28 DC**			COE-28DC
48 DC	**48 DC**			COE-48DC
110 DC	**110 DC**			COE-110DC
125 DC	**125 DC**			COE-125DC
220 DC	**220 DC**			COE-220DC
110/50 AC	**110/50/60 AC**		58 VA (3)	COE-110/50/60AC
115/60 AC	**115/60 AC**		80 VA (3)	COE-115/60AC
230/50 AC	**230/50/60 AC**		58 VA (3)	COE-230/50/60AC
230/60 AC	**230/60 AC**		80 VA (3)	COE-230/60AC
110/50 AC	**110RC**	669	30 W	COE-110RC
120/60 AC				
230/50 AC	**230RC**			COE-230RC
230/60 AC				

(1) In case of 60 Hz voltage frequency the performances are reduced by 10÷15% and the power consumption is 58 VA
(2) Average values based on tests performed at nominal hydraulic condition and ambient/coil temperature of 20°C.
(3) When solenoid is energized, the inrush current is approx 3 times the holding current.

7 ELECTRIC CONNECTORS ACCORDING TO DIN 43650 - for ARAM with pilot solenoid valve

The connectors must be ordered separately.

Code of connector	Function
666	Connector IP-65, suitable for direct connection to electric supply source
667	As 666 connector IP-65 but with built-in signal led, suitable for direct connection to electric supply source

For other available connectors, see tech table K800

8 SEALS AND HYDRAULIC FLUIDS - for other fluids not included in below table, consult our technical office

Seals, recommended fluid temperature	NBR seals (standard) = -20°C ÷ +80°C, with HFC hydraulic fluids = -20°C ÷ +50°C FKM seals (/PE option) = -20°C ÷ +80°C HNBR seals (/BT option) = -40°C ÷ +60°C, with HFC hydraulic fluids = -40°C ÷ +50°C		
Recommended viscosity	15÷100 mm^2/s - max allowed range 2,8 ÷ 500 mm^2/s		
Max fluid contamination level	ISO 4406 class 20/18/15 NAS 1638 class 9, see also filter section www.atos.com or KTF catalog		
Hydraulic fluid	**Suitable seals type**	**Classification**	**Ref. Standard**
Mineral oils	NBR, FKM, HNBR	HL, HLP, HLPD, HVLP, HVLPD	DIN 51524
Flame resistant without water	FKM	HFDU, HFDR	ISO 12922
Flame resistant with water	NBR, HNBR	HFC	

9 OPTIONS

E = External pilot option to be selected when the pilot pressure is supplied from a different line respect to the P main line.
With option E the internal connection between port P and X of the valve is plugged.
The pilot pressure must be connected to the X port available on the valve's mounting surface or on main body (threaded pipe connection G ¼").

WP = Prolunged manual override protected by rubber cap - only for AGAM with pilot solenoid valve

Y = External drain configuration to be selected in case of counterpressure in T line. Valves with option Y are supplied with the drain port G1/4" factory plugged with plastic plug

E option

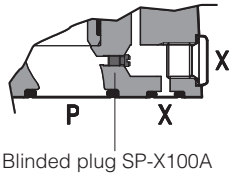

WP option

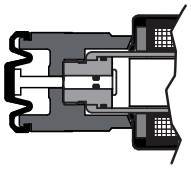

Y option

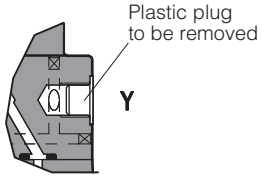

10 FACTORY PRESSURE SETTING

The /PED valves are factory set at the pressure level required by the costumer (min step: 1bar). The factory pressure setting is performed at the flow shown in the following table. The factory pressure setting is marked on the valve nameplate, see section 11 .

VALVE MODEL	FLOW FOR FACTORY PRESSURE SETTING (l/min)
ARAM-20	25
ARAM-32	25

⚠ Any tampering of the lead sealing invalidates the certification

11 NAMEPLATE MARKING

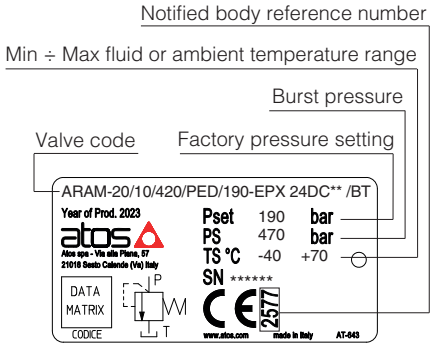

Note: **TS** values are referred to the extreme temperatures, regardless of whether the fluid or the ambient

12 PERMISSIBLE RANGE - based on mineral oil ISO VG 46 at 50°C

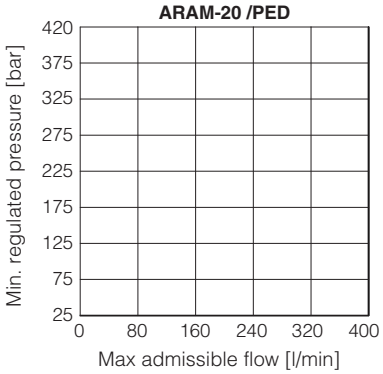

(no flow limitation up to 420 bar)

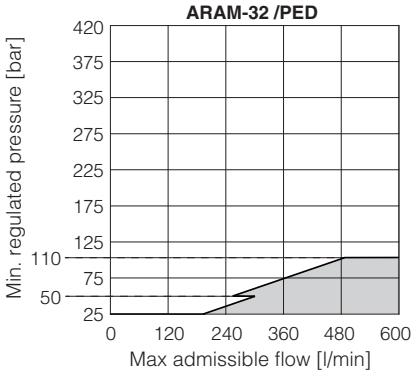

Notes:

1) The valves can operate only in the white area of the above diagrams.
The max admissible flow values within the white area are those for which the pressure increase remains within **+10% with respect to the factory pressure setting.**

Pressure / flow values located in gray areas cannot be performed.

⚠ Before ordering the valve, check that the maximum admissible flow at the required pressure setting, is greater than the maximum flow rate of the system or the accumulator to be protected.

2) The permissible range in the above diagrams is valid only without counterpressure in T line.
In case of counterpressure in T line (up to max 15 bar) the external drain configuration (option Y) is highly recommended.
With internal drain (standard configuration), the max system pressure increases by the counter pressure value in the T line .
To ensure that this increase in max system pressure does not exceed 10% of the valve's factory pressure setting, the admissible flow must be reduced dependent on the counter pressure value in the T line.

13 INSTALLATION DIMENSIONS [mm]

ARAM-20

	Mass [kg]
ARAM-20	3,9

	Mass [kg] with option EPX
ARAM-20/10	5,7
ARAM-20/11	
ARAM-20/20	7,7
ARAM-20/21	
ARAM-20/22	7,2
ARAM-20/32	8,0

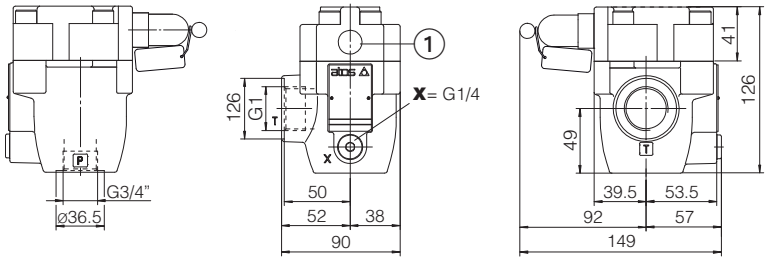

(1) External drain, only for option Y
Y port G1/4" factory plugged with plastic plug

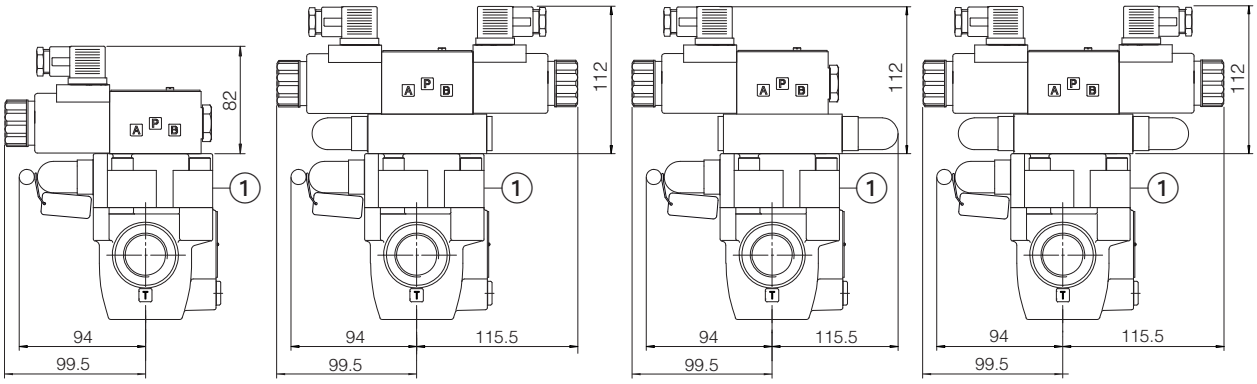

ARAM-20/10/-EPX**
ARAM-20/11/-EPX**

ARAM-20/20/-EPX**
ARAM-20/21/-EPX**

ARAM-20/22/-EPX**

ARAM-20/32/-EPX**

ARAM-32

	Mass [kg]
ARAM-32	4,7

	Mass [kg] with option EPX
ARAM-32/10	6,5
ARAM-32/11	
ARAM-32/20	8,5
ARAM-32/21	
ARAM-32/22	7,9
ARAM-32/32	8,2

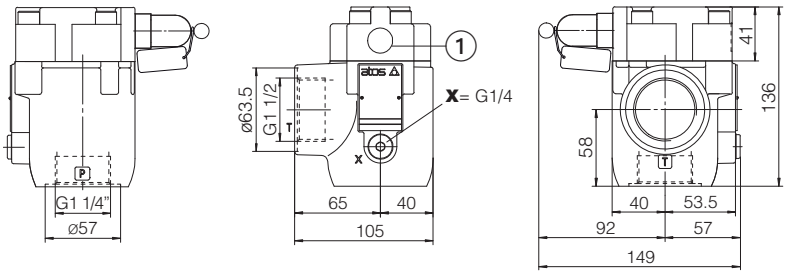

(1) External drain, only for option Y
Y port G1/4" factory plugged with plastic plug

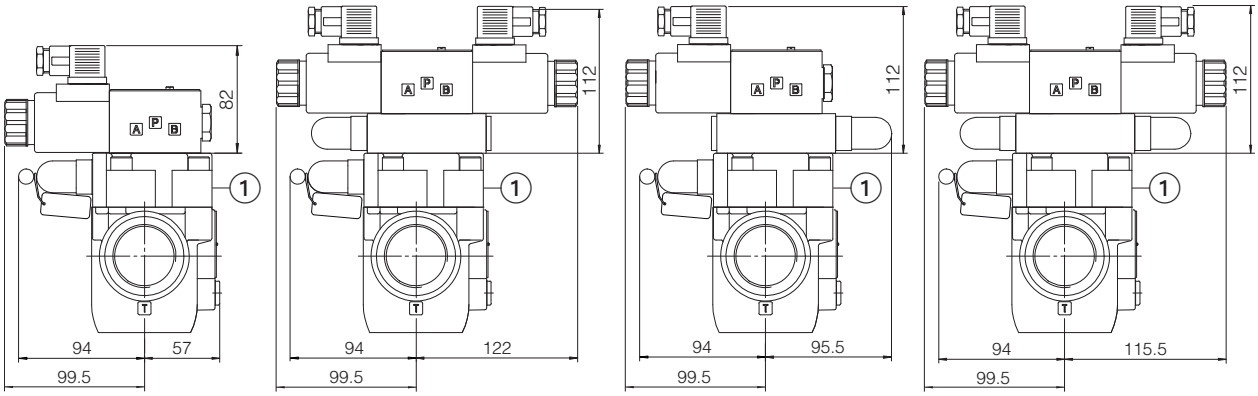

ARAM-32/10/-EPX**
ARAM-32/11/-EPX**

ARAM-32/20/-EPX**
ARAM-32/21/-EPX**

ARAM-32/22/-EPX**

ARAM-32/32/-EPX**

Overall dimensions refer to valves **DC** voltage, with connectors type 666

14 RELATED DOCUMENTATION

CY900	Operating and maintenance information for PED certified valves

Safety pressure relief valves

piloted, subplate, conforming to PED Directive 2014/68/EU - certified by DEKRA

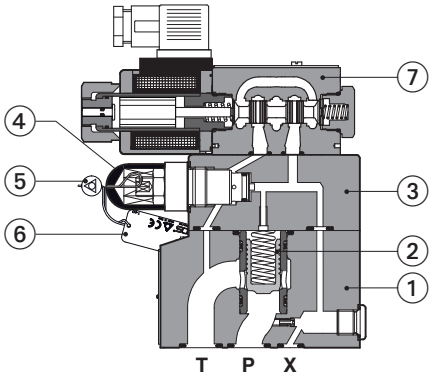

① main body
② poppet
③ pilot stage
④ plastic cap
⑤ lead sealing
⑥ nameplate with factory pressure setting
⑦ pilot solenoid valve for pressure selection

AGAM-10/11/*/PED

AGAM /PED

Safety pressure relief valves, certified by DEKRA according to Pressure Equipment Directive 2014/68/EU (PED).

They are designed to operate as safety components, limiting the maximum system pressure or to protect parts of the hydraulic circuit and accumulators from overpressure.

The valves are factory set at the pressure level required by the costumer, see section 10.

The pressure adjustment screw is protected with a lead sealed plastic cap to avoid any tampering.

AGAM can be equipped with a pilot solenoid valve for venting or for different pressure selection.

Size: **10, 20** and **32** - ISO 6264
Max flow: **200, 400** and **600 l/min**
Max pressure: **420 bar**

1 MODEL CODE

AGAM - 20 / 20 / 420 / 210/100 / E / PED / 280 - EP X 24DC * / *

AGAM: Piloted pressure relief valve, subplate

20: **Valve size** ISO 6264: **10 20 32**

20: **Configuration**, see section 2:
- **-** = without pilot solenoid valve
10, 11: with pilot solenoid valve for venting
20, 21, 22, 32: with pilot solenoid valve for multiple pressure selection

420: **Max pressure**:
420 = 420 bar

210/100: **Pressure range of second / third setting (1)**:
50 = 50 bar **100** = 100 bar
210 = 210 bar **350** = 350 bar **420** = 420 bar

E: **Options**, see section 9:
E WP Y

PED = EU Type examination to 2014/68/EU - certified by DEKRA

280: **Factory pressure setting** (bar):
to be defined by the customer min step 1 bar
(example **280** = 280 bar)
min pressure setting 30 bar

EP: **Pilot valve (2)**:
EP= DHEP for AC and DC supply, high performances with **cURus** certified solenoids

X:
X = without connector **(2)**:
See section 7 for available connectors, to be ordered separately
-00-AC = AC solenoid valve without coils
-00-DC = DC solenoid valve without coils

24DC: **Voltage code**, see section 6 **(2)**:

*****: Series number

*****: **Seals material,** see section 8:
- = NBR
PE = FKM
BT = HNBR

(1) Only for AGAM-* /20, /21, /22, /32; the set pressure cannot be higher than PED factory pressure setting
(2) Only for AGAM with pilot solenoid valve

2 CONFIGURATIONS AND HYDRAULIC SYMBOLS

AGAM

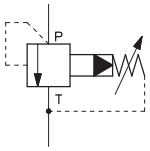

AGAM /E

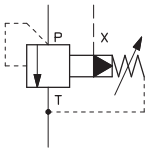

AGAM /Y

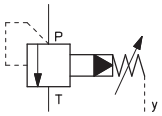

AGAM /EY

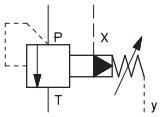

AGAM-/10**
one setting pressure + venting
with de-energized solenoid

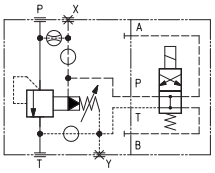

AGAM-/11**
one setting pressure + venting
with energized solenoid

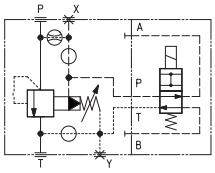

AGAM-/22**
two setting pressure
without venting

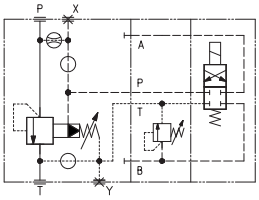

AGAM-/20**
two setting pressure + venting
with de-energized solenoid

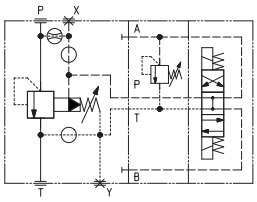

AGAM-/21**
two setting pressure + venting
with energized solenoid

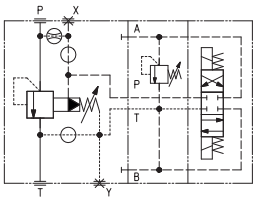

AGAM-/32**
three setting pressure
without venting

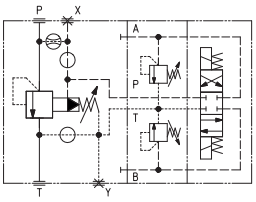

Example of complete hydraulic symbol of AGAM-**10 option /E, option /Y and option /EY

AGAM-/10** option **/E**

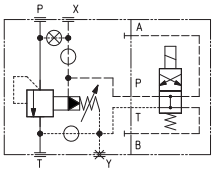

AGAM-/10** option **/Y**

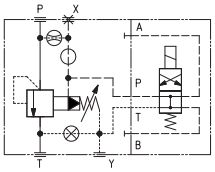

AGAM-/10** option **/EY**

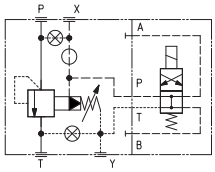

3 GENERAL CHARACTERISTICS

Assembly position / location		Any position
MTTFd values according to EN ISO 13849		75 years, for further details see technical table P007
Ambient temperature	Without pilot valve	**Standard** = -30°C ÷ +80°C **/PE** option = -20°C ÷ +80°C **/BT** option = -40°C ÷ +70°C
	With pilot valve	**Standard** = -30°C ÷ +70°C **/PE** option = -20°C ÷ +70°C **/BT** option = -40°C ÷ +70°C
Storage temperature range	Without pilot valve	**Standard** = -30°C ÷ +80°C **/PE** option = -20°C ÷ +80°C **/BT** option = -40°C ÷ +70°C
	With pilot valve	**Standard** = -30°C ÷ +70°C **/PE** option = -20°C ÷ +70°C **/BT** option = -40°C ÷ +70°C
Surface protection		Zinc coating with black passivation -salt spray test (EN ISO9227) > 200h
Compliance		PED Directive 2014/68/EU - EU type-examination certificate **(1)** RoHs Directive 2011/65/EU as last update by 2015/863/EU REACH Regulation (EC) n°1907/2006

(1) The type-examinator certificate can be download from www.atos.com

4 HYDRAULIC CHARACTERISTICS

Valve model		**AGAM-10**	**AGAM-20**	**AGAM-32**
Max pressure on ports P, X	[bar]	420		
Max pressure on ports T **(1)**	[bar]	0 with internal drain 15 bar with external drain, option Y		
Max pressure on port Y	[bar]	0		
Factory pressure setting range	[bar]	25÷420		
Max flow	[l/min]	200	400	600

(1) PED valves must be operated without counterpressure in T line to comply with permessible range in section 12
A max counterpressure of 15 bar is allowed only with external drain configuration (option Y)

5 ELECTRICAL CHARACTERISTICS - for AGAM with pilot solenoid valve

Insulation class	**H** (180°C) for DC coils; **F** (155°C) for AC coils Due to the occuring surface temperatures of the solenoid coils, the European standards EN ISO 13732-1 and EN ISO 4413 must be taken into account
Protection degree to DIN EN 60529	**IP 65** (with connectors correctly assembled)
Relative duty factor	100%
Supply voltage and frequency	See section 6
Supply voltage tolerance	± 10%
Certification	**cURus** North American standard

6 COIL VOLTAGE - for AGAM with pilot solenoid valve

External supply nominal voltage ± 10%	**Voltage code**	Type of connector	Power consumption (2)	Code of spare coil
12 DC	**12 DC**	666 or 667	30 W	COE-12DC
14 DC	**14 DC**			COE-14DC
24 DC	**24 DC**			COE-24DC
28 DC	**28 DC**			COE-28DC
48 DC	**48 DC**			COE-48DC
110 DC	**110 DC**			COE-110DC
125 DC	**125 DC**			COE-125DC
220 DC	**220 DC**			COE-220DC
110/50 AC	**110/50/60 AC**		58 VA (3)	COE-110/50/60AC
115/60 AC	**115/60 AC**		80 VA (3)	COE-115/60AC
230/50 AC	**230/50/60 AC**		58 VA (3)	COE-230/50/60AC
230/60 AC	**230/60 AC**		80 VA (3)	COE-230/60AC
110/50 AC	**110RC**	669	30 W	COE-110RC
120/60 AC				
230/50 AC	**230RC**			COE-230RC
230/60 AC				

(1) In case of 60 Hz voltage frequency the performances are reduced by 10÷15% and the power consumption is 58 VA
(2) Average values based on tests performed at nominal hydraulic condition and ambient/coil temperature of 20°C.
(3) When solenoid is energized, the inrush current is approx 3 times the holding current.

7 ELECTRIC CONNECTORS ACCORDING TO DIN 43650 - for AGAM with pilot solenoid valve

The connectors must be ordered separately.

Code of connector	Function
666	Connector IP-65, suitable for direct connection to electric supply source
667	As 666 connector IP-65 but with built-in signal led, suitable for direct connection to electric supply source

For other available connectors, see tech table K800

8 SEALS AND HYDRAULIC FLUIDS - for other fluids not included in below table, consult our technical office

Seals, recommended fluid temperature	NBR seals (standard) = -20°C ÷ +80°C, with HFC hydraulic fluids = -20°C ÷ +50°C FKM seals (/PE option) = -20°C ÷ +80°C HNBR seals (/BT option) = -40°C ÷ +60°C, with HFC hydraulic fluids = -40°C ÷ +50°C		
Recommended viscosity	15÷100 mm²/s - max allowed range 2,8 ÷ 500 mm²/s		
Max fluid contamination level	ISO 4406 class 20/18/15 NAS 1638 class 9, see also filter section www.atos.com or KTF catalog		
Hydraulic fluid	**Suitable seals type**	**Classification**	**Ref. Standard**
Mineral oils	NBR, FKM, HNBR	HL, HLP, HLPD, HVLP, HVLPD	DIN 51524
Flame resistant without water	FKM	HFDU, HFDR	ISO 12922
Flame resistant with water	NBR, HNBR	HFC	

9 OPTIONS

E = External pilot option to be selected when the pilot pressure is supplied from a different line respect to the P main line.
With option E the internal connection between port P and X of the valve is plugged.
The pilot pressure must be connected to the X port available on the valve's mounting surface or on main body (threaded pipe connection G ¼").

WP = Prolunged manual override protected by rubber cap - only for AGAM with pilot solenoid valve

Y = External drain configuration to be selected in case of counterpressure in T line. Valves with option Y are supplied with the drain port G1/4" factory plugged with plastic plug

E option

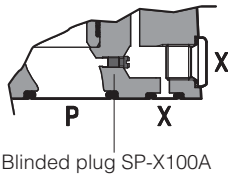

WP option

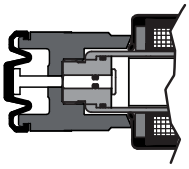

Y option

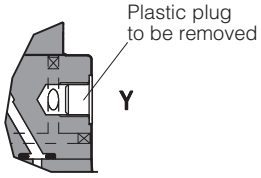

10 FACTORY PRESSURE SETTING

The /PED valves are factory set at the pressure level required by the costumer (min step: 1bar). The factory pressure setting is performed at the flow shown in the following table. The factory pressure setting is marked on the valve nameplate, see section 11 .

VALVE MODEL	FLOW FOR FACTORY PRESSURE SETTING (l/min)
AGAM-10	10
AGAM-20	25
AGAM-32	25

⚠ Any tampering of the lead sealing invalidates the certification

11 NAMEPLATE MARKING

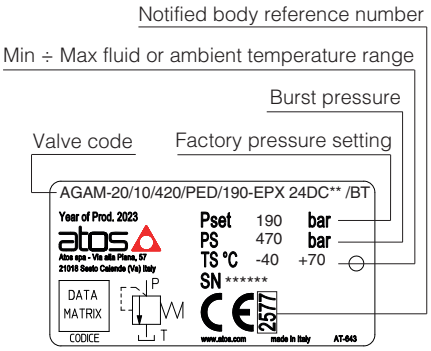

Note: **TS** values are referred to the extreme temperatures, regardless of whether the fluid or the ambient

12 PERMISSIBLE RANGE - based on mineral oil ISO VG 46 at 50°C

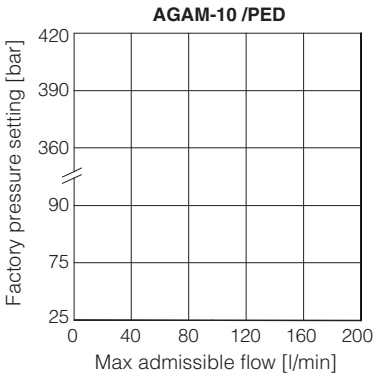

(no flow limitation up to 420 bar)

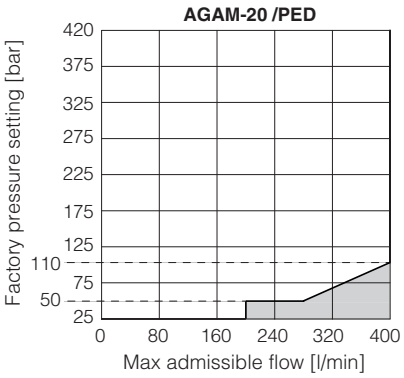

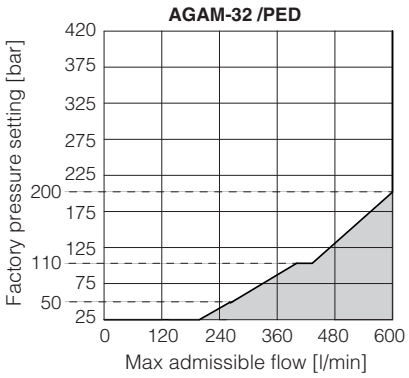

Notes:

1) The valves can operate only in the white area of the above diagrams.
The max admissible flow values within the white area are those for which the pressure increase remains within **+10% with respect to the factory pressure setting.**

Pressure / flow values located in gray areas cannot be performed.

⚠ Before ordering the valve, check that the maximum admissible flow at the required pressure setting, is greater than the maximum flow rate of the system or the accumulator to be protected.

2) The permissible range in the above diagrams is valid only without counterpressure in T line.
In case of counterpressure in T line (up to max 15 bar) the external drain configuration (option Y) is highly recommended.
With internal drain (standard configuration), the max system pressure increases by the counter pressure value in the T line .
To ensure that this increase in max system pressure does not exceed 10% of the valve's factory pressure setting, the admissible flow must be reduced dependent on the counter pressure value in the T line.

13 INSTALLATION DIMENSIONS [mm]

AGAM-10

ISO 6264: 2007
Mounting surface: 6264-06-09-1-97
Fastening bolts:
4 socket head screws M12x35 class 12.9
Tightening torque = 125 Nm
Seals: 2 OR 123; 1 OR 109/70
Ports P, T: Ø = 14,5 mm
Ports X: Ø = 3,2 mm

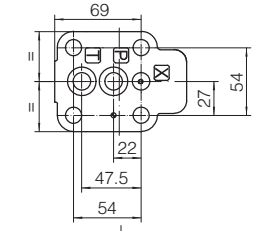

	Mass [kg]
AGAM-10	3,6

	Mass [kg]
	with option EPX
AGAM-10/10	5,4
AGAM-10/11	
AGAM-10/20	6,2
AGAM-10/21	
AGAM-10/22	5,9
AGAM-10/32	6,3

(1) External drain, only for option Y
Y port G1/4" factory plugged with plastic plug

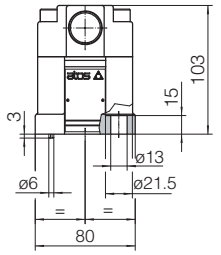

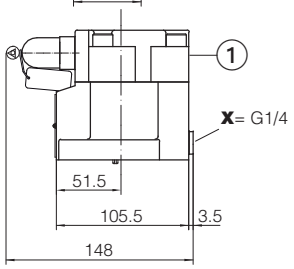

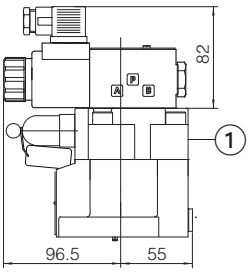

AGAM-10/10/-EPX**
AGAM-10/11/-EPX**

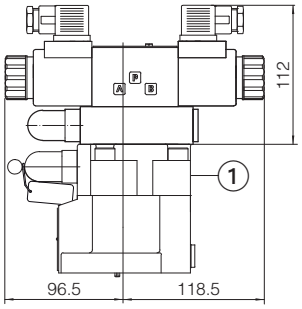

AGAM-10/20/-EPX**
AGAM-10/21/-EPX**

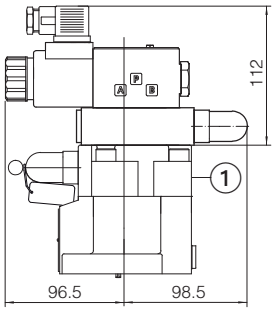

AGAM-10/22/-EPX**

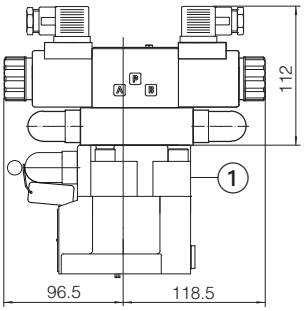

AGAM-10/32/-EPX**

Overall dimensions refer to valves **DC** voltage, with connectors type 666

AGAM-20

ISO 6264: 2007
Mounting surface: 6264-08-13-1-97
Fastening bolts:
4 socket head screws M16x50 class 12.9
Tightening torque = 300 Nm
Seals: 2 OR 4112; 1 OR 109/70
Ports P, T: Ø = 24 mm
Ports X: Ø = 3,2 mm

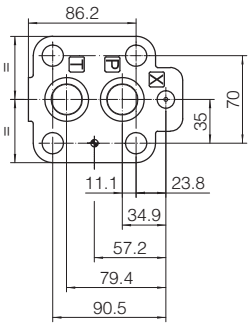

	Mass [kg]
AGAM-20	4,8

	Mass [kg]
	with option EPX
AGAM-20/10	6,6
AGAM-20/11	
AGAM-20/20	7,7
AGAM-20/21	
AGAM-20/22	7,4
AGAM-20/32	7,8

(1) External drain, only for option Y
Y port G1/4" factory plugged with plastic plug

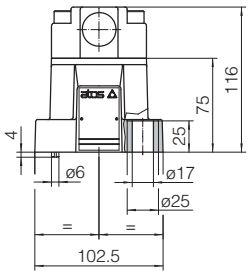

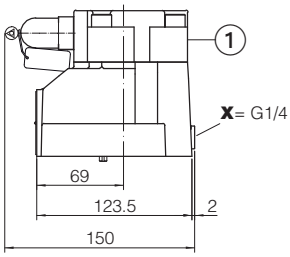

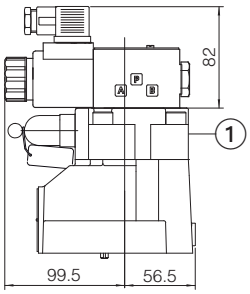

AGAM-20/10/-EPX**
AGAM-20/11/-EPX**

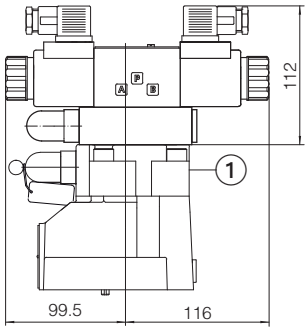

AGAM-20/20/-EPX**
AGAM-20/21/-EPX**

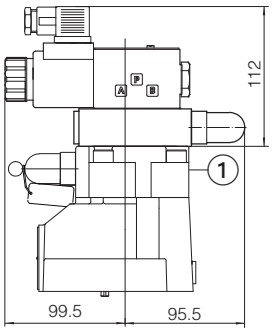

AGAM-20/22/-EPX**

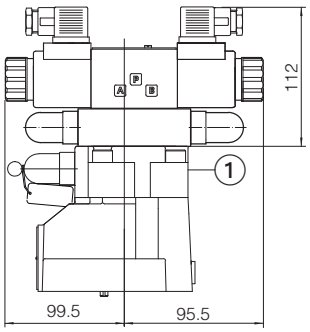

AGAM-20/32/-EPX**

Overall dimensions refer to valves **DC** voltage, with connectors type 666

AGAM-32

ISO 6264: 2007
Mounting surface: 6264-10-17-1-97
(with M20 fixing holes instead of standard M18)
Fastening bolts:
4 socket head screws M20x60 class 12.9
Tightening torque = 600 Nm
Seals: 2 OR 4131; 1 OR 109/70
Ports P, T: Ø = 28,5 mm
Ports X: Ø = 3,2 mm

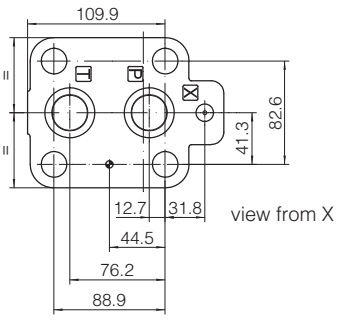

	Mass [kg]
AGAM-32	6.2

	Mass [kg]
	with option EPX
AGAM-32/10	8
AGAM-32/11	
AGAM-32/20	8,1
AGAM-32/21	
AGAM-32/22	8,8
AGAM-32/32	9,5

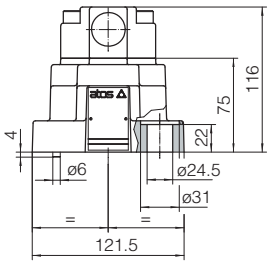

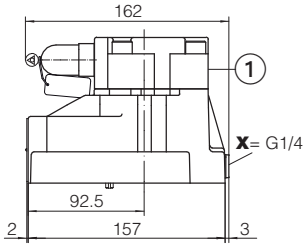

(1) External drain, only for option Y
Y port G1/4" factory plugged with plastic plug

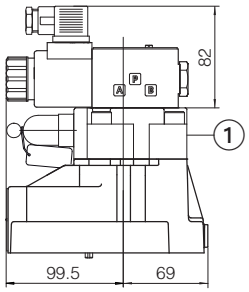

AGAM-32/10/-EPX**
AGAM-32/11/-EPX**

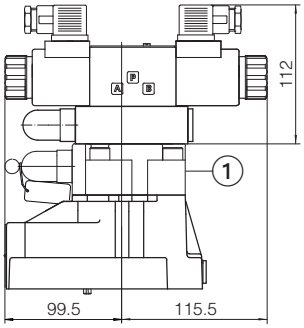

AGAM-32/20/-EPX**
AGAM-32/21/-EPX**

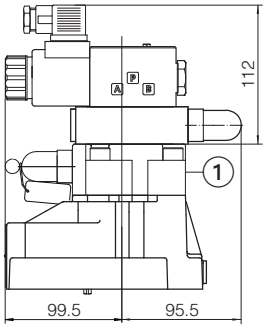

AGAM-32/22/-EPX**

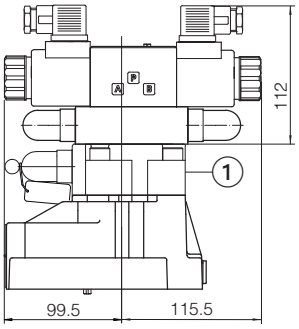

AGAM-32/32/-EPX**

Overall dimensions refer to valves **DC** voltage, with connectors type 666

14 MOUNTING SUBPLATES - see table K280

Valve	Subplate model	Port location	Ports			Ø Counterbore [mm]			Mass [Kg]
			P	T	X	P	T	X	
AGAM-10	BA-306	Ports P, T, X underneath;	G 1/2"	G 3/4"	G 1/4"	30	36,5	21,5	1,5
AGAM-20	BA-406		G 3/4"	G 3/4"	G 1/4"	36,5	36,5	21,5	3,5
	BA-506		G 1"	G 1"	G 1/4"	46	46	21,5	3,5
AGAM-32	BA-706		G 1 1/2"	G 1 1/2"	G 1/4"	63,5	63,5	21,5	6

15 RELATED DOCUMENTATION

CY900	Operating and maintenance information for PED certified valves

Solenoid modular valves

direct, modular, spool type

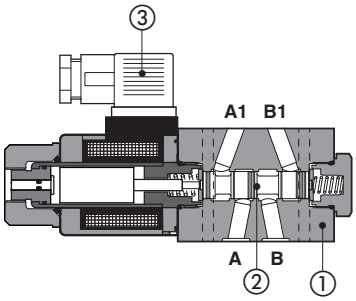

HF-0611

① Body
② Spool
③ Coil electric connector (to be ordered separately)

HF are spool type, direct operated solenoid valves in modular execution, normally used for shut-off or to by-pass the hydraulic user lines.

The modular execution permits to make compact functional circuits, by the stack mounting with other modular valves and solenoid valves size 06.

Mounting Surface: **ISO 4401 size 06**
Max flow: **60 l/min**
Max pressure: **350 bar**

1 MODEL CODE

HF-0	611	/	A	-	E	X	24DC	**	/*

HF-0: Modular directional valve, size 06

611: **Valve configuration and spool:**
611, 613, 614, 673
see section 2

A: **Options**:
A = solenoid mounted at side of port B
B = orientation of coil rotated of 180°
WP = prolunged manual override protected by a rubber cap

E: **E** = solenoid OE for AC and DC supply

X: **X** = without connector
See section 6 for available connectors, to be ordered separately
Coils with special connectors
XJ = AMP Junior Timer connector
XK = Deutsch connector
XS = Lead Wire connection

24DC: **Voltage code**, see section 7

******: Series number

/*: Seals material, see section 4:
- = NBR
PE = FKM
BT = HNBR

2 CONFIGURATION

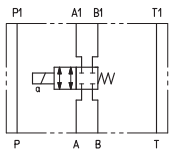

HF-0611

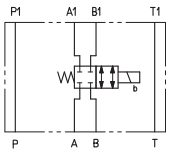

HF-0611/A

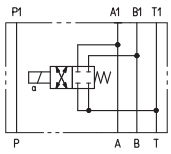

HF-0613

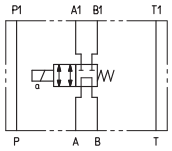

HF-0614

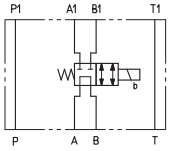

HF-0614/A

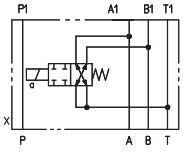

HF-0673

3 MAIN CHARACTERISTICS

Assembly position / location	Any position
Subplate surface finishing	Roughness index Ra 0,4 - flatness ratio 0,01/100 (ISO 1101)
MTTFd values according to EN ISO 13849	150 years, for further details see technical table P007
Compliance	CE to Low Voltage Directive 2014/35/EU and Machine Directive 2006/42/EC. RoHS Directive 2011/65/EU as last update by 2015/863/EU REACH Regulation (EC) n°1907/2006
Ambient temperature	**Standard** -30°C ÷ +70°C **/PE** option -20°C ÷ +70°C **/BT** option -40°C ÷ +70°C
Flow direction	As shown in the symbols of table 2
Operating pressure	Ports P,A,B: **350** bar; Port T: **210** bar (DC solenoid); **160** bar (AC solenoid)
Maximum flow	**60 l/min**

3.1 Coils characteristics

Insulation class	**H** (180°C) for DC coils **F** (155°C) for AC coils Due to the occuring surface temperatures of the solenoid coils, the European standards EN ISO 13732-1 and EN ISO 4413 must be taken into account
Protection degree to DIN EN 60529	**IP 65** (with mating connectors correctly assembled)
Relative duty factor	100%
Supply voltage and frequency	See electric features 7
Supply voltage tolerance	± 10%
Certification	**cURus** North American standard

4 SEALS AND HYDRAULIC FLUID - for other fluids not included in below table, consult our technical office

Seals, recommended fluid temperature	NBR seals (standard) = -20°C ÷ +80°C, with HFC hydraulic fluids = -20°C ÷ +50°C FKM seals (/PE option) = -20°C ÷ +80°C HNBR seals (/BT option)= -40°C ÷ +60°C, with HFC hydraulic fluids = -40°C ÷ +50°C		
Recommended viscosity	15÷100 mm²/s - max allowed range 2,8 ÷ 500 mm²/s		
Max fluid contamination level	ISO4406 class 20/18/15 NAS1638 class 9, see also filter section at www.atos.com or KTF catalog		
Hydraulic fluid	**Suitable seals type**	**Classification**	**Ref. Standard**
Mineral oils	NBR, FKM, HNBR	HL, HLP, HLPD, HVLP, HVLPD	DIN 51524
Flame resistant without water	FKM	HFDU, HFDR	ISO 12922
Flame resistant with water	NBR, HNBR	HFC	

5 OPTIONS

A = Solenoid mounted at side of port B. In standard versions, solenoid is mounted at side of port A.

B = Orientation of coil and proximity connectors rotated of 180°

WP = Prolunged manual override protected by a rubber cap (not for FV)

6 ELECTRIC CONNECTORS ACCORDING TO DIN 43650 (to be ordered separately)

666, 667 (for AC or DC supply)	**669** (for AC supply)	**CONNECTOR WIRING**	
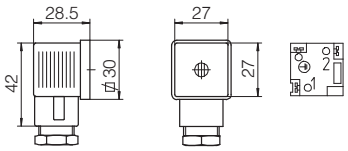	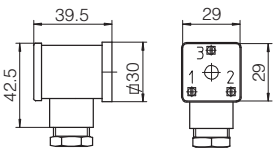	**666, 667** 1 = Positive ⊕ 2 = Negative ⊖ ⊕ = Coil ground	**669** 1,2 = Supply voltage VAC 3 = Coil ground
		SUPPLY VOLTAGES	
		666	**667** / **669**
		All voltages	**667**: 24 AC or DC, 110 AC or DC, 220 AC or DC **669**: 110/50 AC, 110/60 AC, 230/50 AC, 230/60 AC

Note: for electronic connectors type **E-SD**, see tab. K500

7 ELECTRIC FEATURES

External supply nominal voltage ± 10%	**Voltage code**	Type of connector	Power consumption (2)	Code of spare coil
12 DC	**12 DC**	666 or 667	30 W	COE-12DC
14 DC	**14 DC**			COE-14DC
24 DC	**24 DC**			COE-24DC
28 DC	**28 DC**			COE-28DC
48 DC	**48 DC**			COE-48DC
110 DC	**110 DC**			COE-110DC
125 DC	**125 DC**			COE-125DC
220 DC	**220 DC**			COE-220DC
110/50 AC	**110/50/60 AC**		58 VA (3)	COE-110/50/60AC (1)
230/50 AC	**230/50/60 AC**			COE-230/50/60AC (1)
115/60 AC	**115/60 AC**		80 VA (3)	COE-115/60AC
230/60 AC	**230/60 AC**			COE-230/60AC
110/50 AC - 120/60 AC	**110 RC**	669	30 W	COE-110RC
230/50 AC - 230/60 AC	**230 RC**			COE-230RC

(1) Coil can be supplied also with 60 Hz of voltage frequency: in this case the performances are reduced by 10 ÷15% and the power consumption is 52 VA.
(2) Average values based on tests preformed at nominal hydraulic condition and ambient/coil temperature of 20°C.
(3) When solenoid is energized, the inrush current is approx 3 times the holding current.

8 Q/ΔP DIAGRAMS based on mineral oil ISO VG 46 at 50°C

Flow direction / Valve type	**A→A1**	**B→B1**	**A→B**	**A1→T**	**B1→T**
HF-0611	1	2			
HF-0614	1	2	3		
HF-0673	3	3		4	4

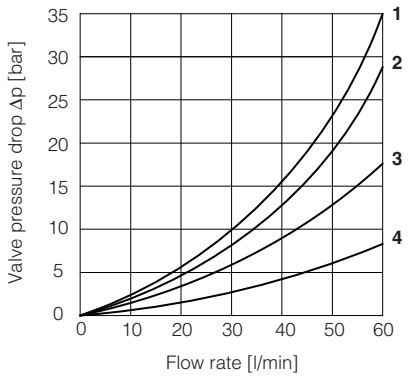

9 OPERATING LIMITS based on mineral oil ISO VG 46 at 50°C

The diagrams have been obtained with warm solenoids and power supply at lowest value (V_{nom} - 10%)

Valve type	Curve
HF-0611	**A**
HF-0614, HF-0673	**B**

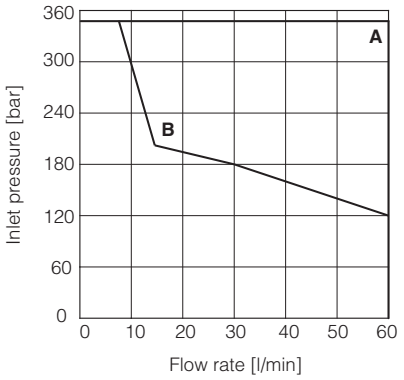

10 DIMENSIONS [mm]

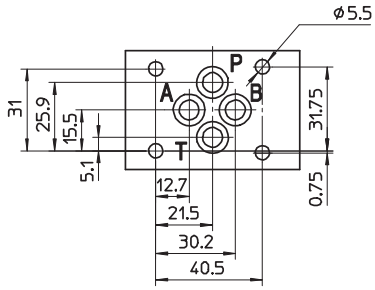

ISO 4401: 2005
Mounting surface: 4401-03-02-0-05
Seals: 4 OR 108
Ports P, A, B, T: Ø = 7.5 mm (max).

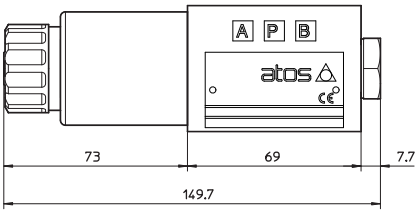

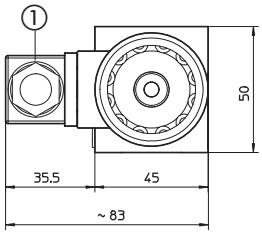

HF-0611
HF-0613
HF-0614
HF-0673

1 = Power supply connector code 666, 667 or 669, to be ordered separately

Modular relief valves type HMP, HM, KM

ISO 4401 sizes 06 and 10

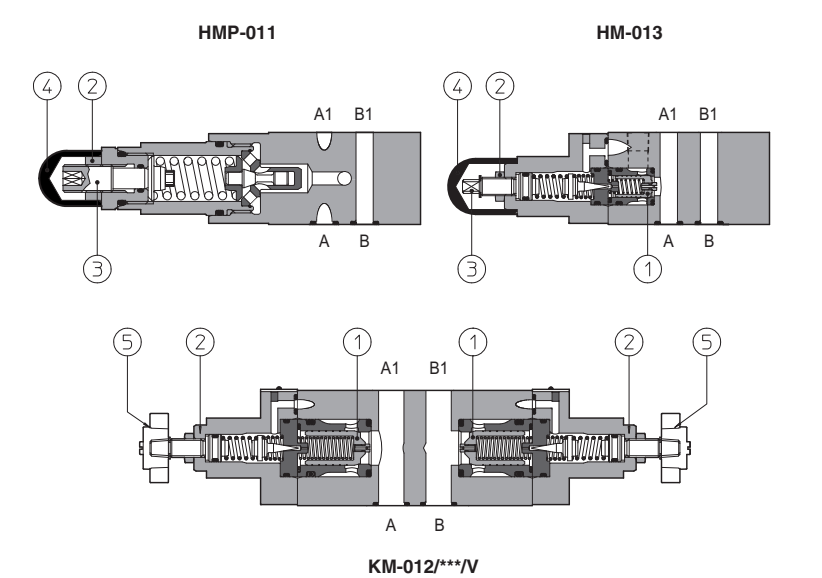

HMP are direct operated pressure relief valves.
HM and **KM** are double stage pressure relief valves with balanced poppet ①.

The pressure adjustment is operated by loosening the locking nut ② and turning the screw ③ protected by cap ④. Optional versions with setting adjustment by handwheel ⑤ instead of the screw are available on request.
Clockwise rotation increases the pressure.

Valve size and max flow:

HMP = size 06, max flow: 35 l/min
HM = size 06, max flow: 60 l/min
KM = size 10, max flow: 120 l/min

Mounting surface: **ISO 4401 size 06, 10**
Max pressure: up to **350 bar**

1 MODEL CODE

HM	-	011	/	210	/	V	**	/	*

Modular pressure relief valve size:
HMP = 06
HM = 06
KM = 10

Configuration, see section 2
011 = single on port P, dicharge to port T
012 = double on ports A and B, discharge to port T
013 = single on port A, discharge to port T
014 = single on port B, discharge to port T
015 = double on ports A and B, with the relieved pressure cross-discharged

Pressure range

HMP:	HM and KM:
50 = 2÷ 50 bar	**50** = 4÷ 50 bar
100 = 3÷100 bar	**100** = 5÷100 bar
210 = 10÷210 bar	**210** = 5÷210 bar
350 = 15÷350 bar	**350** = 5÷350 bar

Options:
V = setting adjustment by handwheel instead of a grub screw protected by cap
Only for HMP:
R = reduced leakage for special applications
VF = regulating knob
VS = regulating knob with safety locking

Series number

Seals material, see section 5:
- = NBR
PE = FKM
BT = HNBR

2 HYDRAULIC CONFIGURATION

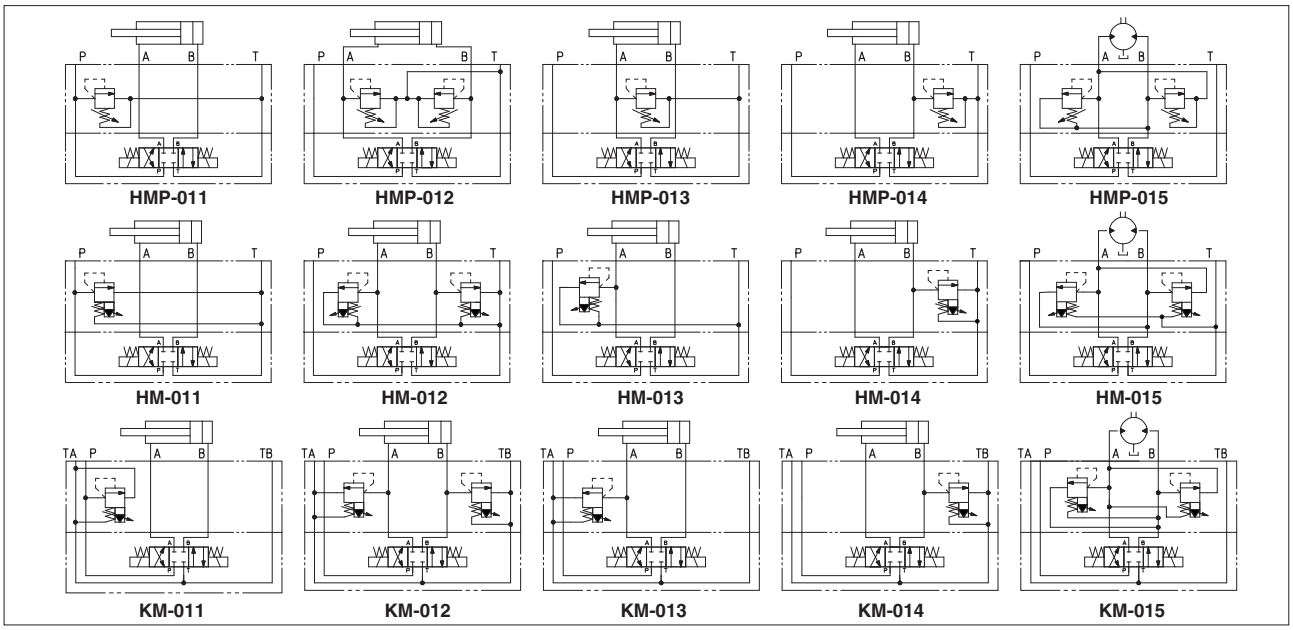

3 GENERAL CHARACTERISTICS

Assembly position / location	Any position
Subplate surface finishing	Roughness index Ra 0,4 - flatness ratio 0,01/100 (ISO 1101)
MTTFd values according to EN ISO 13849	150 years, for further details see technical table P007
Ambient temperature	Standard execution = -30°C ÷ +70°C /PE option = -20°C ÷ +70°C /BT option = -40°C ÷ +70°C
Compliance	RoHS Directive 2011/65/EU as last update by 2015/863/EU REACH Regulation (EC) n°1907/2006

4 HYDRAULIC CHARACTERISTICS

Valve model		HMP	HM	KM
Max flow	[l/min]	35	60	120
Pressure range	[bar]	2÷50; 3÷100; 10÷210; 15÷350	4÷50; 5÷100; 5÷210; 5÷350	

5 SEALS and HYDRAULIC FLUIDS - for other fluids not included in below table, consult our technical office

Seals, recommended fluid temperature	NBR seals (standard) = -20°C ÷ +80°C, with HFC hydraulic fluids = -20°C ÷ +50°C FKM seals (/PE option)= -20°C ÷ +80°C HNBR seals (/BT option)= -40°C ÷ +60°C, with HFC hydraulic fluids = -40°C ÷ +50°C		
Recommended viscosity	15÷100 mm²/s - max allowed range 2.8 ÷ 500 mm²/s		
Max fluid contamination level	ISO4406 class 20/18/15 NAS1638 class 9, see also filter section at www.atos.com or KTF catalog		
Hydraulic fluid	**Suitable seals type**	**Classification**	**Ref. Standard**
Mineral oils	NBR, FKM, HNBR	HL, HLP, HLPD, HVLP, HVLPD	DIN 51524
Flame resistant without water	FKM	HFDU, HFDR	ISO 12922
Flame resistant with water	NBR, HNBR	HFC	

6 REGULATED PRESSURE VERSUS FLOW DIAGRAMS (Based on mineral oil ISO VG 46 at 50°C)

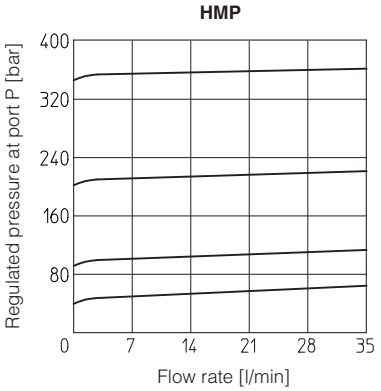

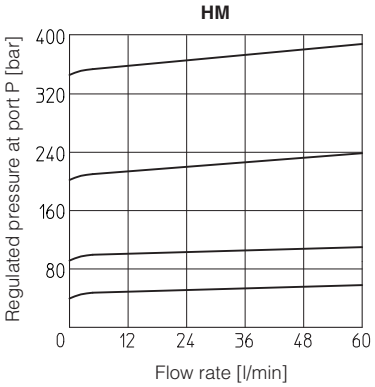

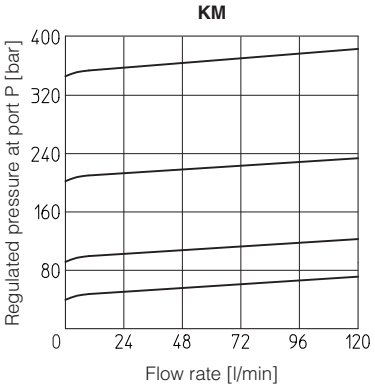

7 MINIMUM PRESSURE VERSUS FLOW DIAGRAMS (Based on fluid viscosity of 25 mm²/s at 40°C)

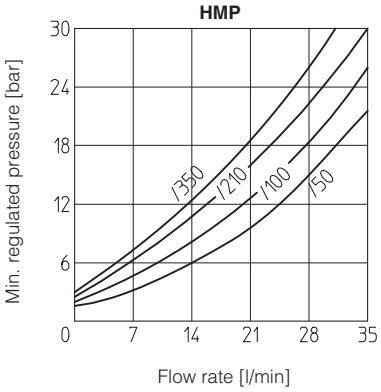

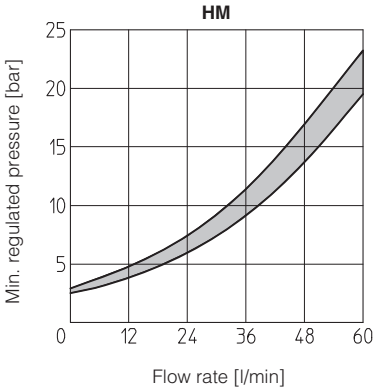

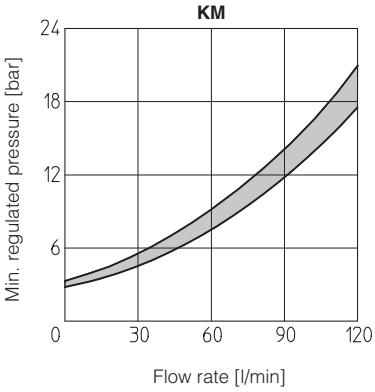

8 INSTALLATION DIMENSIONS OF HMP VALVES [mm]

HMP-011

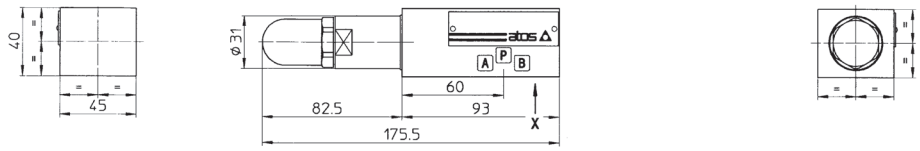

Mass: 1,4 Kg

HMP-012

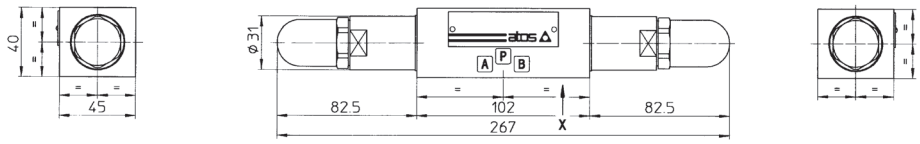

Mass: 1,7 Kg

HMP-013
HMP-014

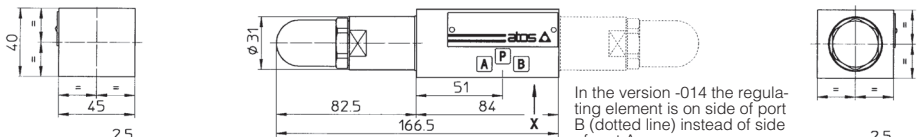

In the version -014 the regulating element is on side of port B (dotted line) instead of side of port A.

Mass: 1,2 Kg

HMP-015

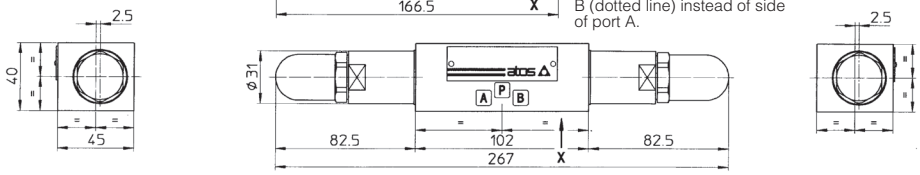

Mass: 1,7 Kg

Adjustment device for option /V

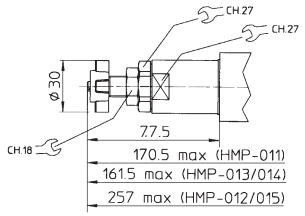

ISO 4401: 2005
Mounting surface: 4401-03-02-0-05
Diameter of ports A, B, P, T: Ø = 7,5 mm
Seals: 4 OR 108

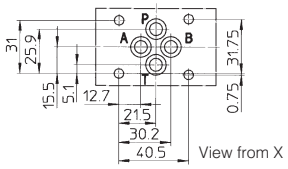

Adjustment device for option /VF and /VS

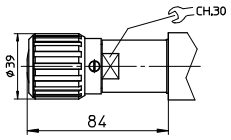

Fastening bolts: n° 4 socket head screws M5. The lenght depends on number and type of modular elements associated.

9 INSTALLATION DIMENSIONS OF HM VALVES [mm]

HM-011
HM-014

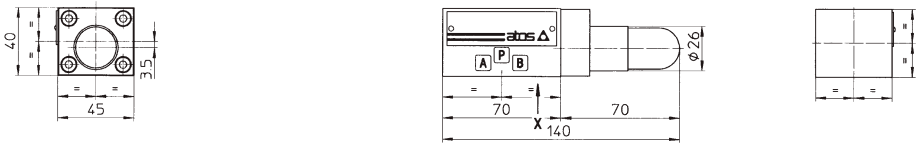

Mass: 1,1 Kg

HM-012
HM-015

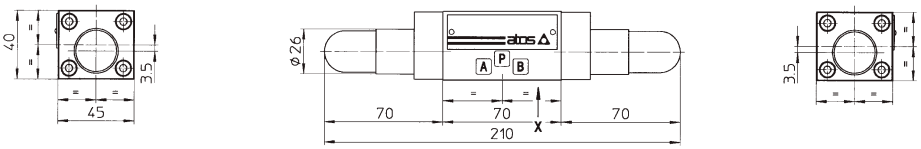

Mass: 1,3 Kg

HM-013

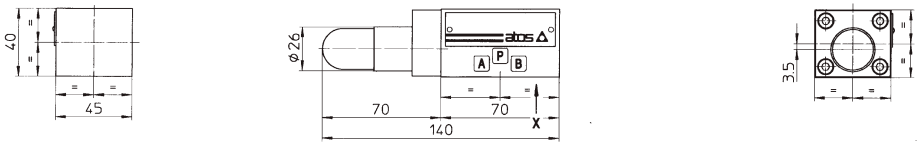

Mass: 1,1 Kg

Adjustment device for option /V

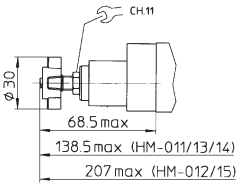

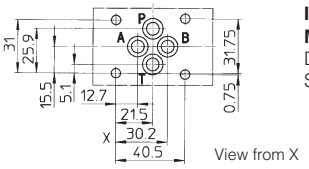

ISO 4401: 2005
Mounting surface: 4401-03-02-0-05
Diameter of ports A, B, P, T: Ø = 7,5 mm
Seals: 4 OR 108

Fastening bolts: n° 4 socket head screws M5. The lenght depends on number and type of modular elements associated.

10 INSTALLATION DIMENSIONS OF KM VALVES [mm]

KM-011

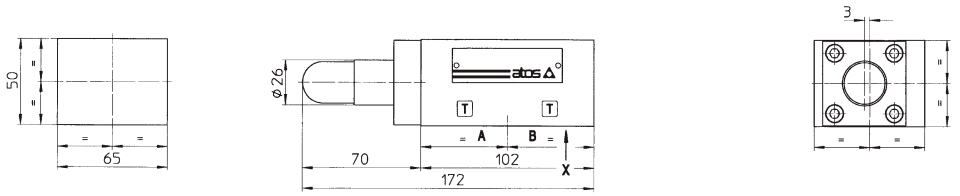

Mass: 2,5 Kg

KM-012

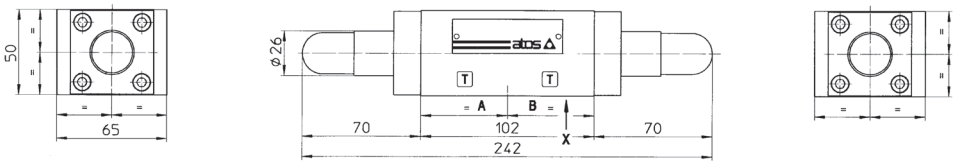

Mass: 2,8 Kg

KM-013

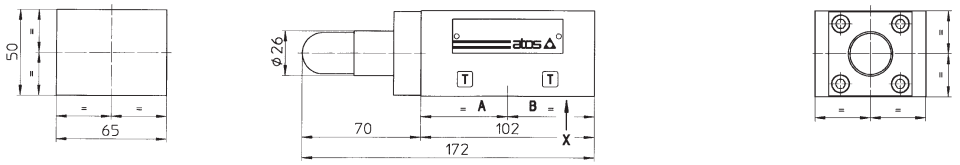

Mass: 2,5 Kg

KM-014

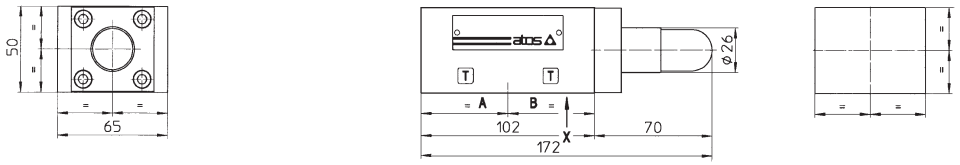

Mass: 2,5 Kg

KM-015

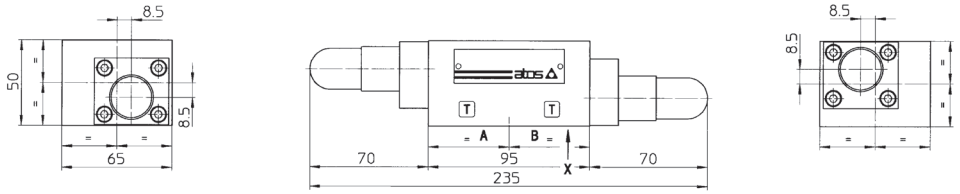

Mass: 2,5 Kg

Adjustement device for option /V

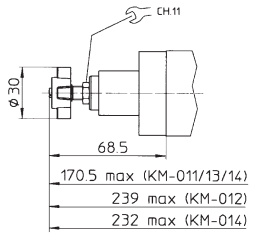

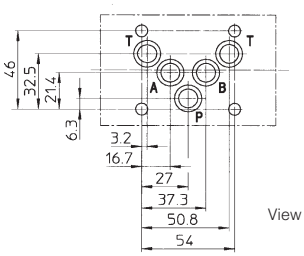

View from X

ISO 4401: 2005
Mounting surface: 4401-05-04-0-05
Diameter of ports A, B, P, T: Ø = 11,2 mm
Seals: 5 OR 2050

Fastening bolts: n° 4 socket head screws M6. The lenght depends on number and type of modular elements associated.

Modular sequence valves type HS-011 and KS-011

spool type, ISO 4401 size 06 and 10

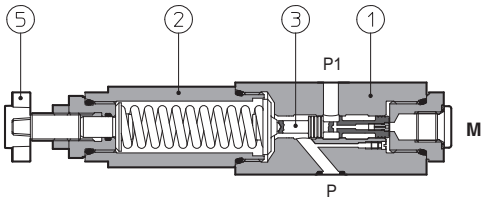

HS-011/*/V**

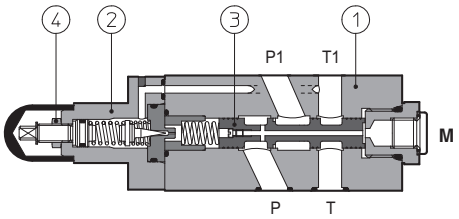

KS-011

HS are direct sequence valves, spool type ③.
KS are double stage ① ② sequence valves, spool type ③.

Pressure adjustment is operated by loosening the locking nut ④ and turning the setting screw in the normal model.
Optional versions with a handwheel ⑤ are available on request.
Clockwise rotation increases the pressure.

Valve size and max flow:

HS = size 06, flow up to 40 l/min
KS = size 10, flow up to 80 l/min

Mounting surface: **ISO 4401 size 06, 10**
Max pressure: **350 bar** (HS)
315 bar (KS)

1 MODEL CODE

HS	-	011	/	210	/	V	**	/	*

Modular sequence valve, size:
HS = 06
KS = 10

Configuration, see section 2
011 = single, acting on port P, drain to port T

Pressure range:

for HS:	**for KS:**
32 = 3 - 32 bar	
100= 20 - 100 bar	**100**= 7 - 100 bar
210= 50 - 210 bar	**210**= 8 - 210 bar

Options:
V = setting adjustment by handwheel instead of a grub screw protected by cap
Only for HS:
VF = regulating knob
VS = regulating knob with safety locking

Series number

Seals material, see section 3:
- = NBR
PE = FKM
BT = HNBR

2 HYDRAULIC CHARACTERISTICS

Hydraulic configuration

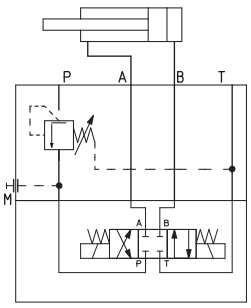

HS-011

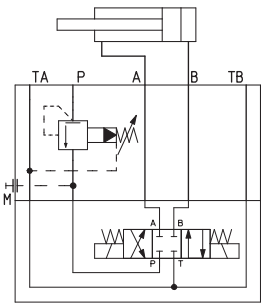

KS-011

Valve model		HS-011/32	HS-011/100	HS-011/210	KS-011/100	KS-011/210
Max flow	[l/min]	40			80	
Max drain	[cm³/min]	50			50	
Pressure range	[bar]	3 - 32	20 - 100	50 - 210	7 - 100	8 - 210
Max inlet pressure	[bar]	350			315	
Max pressure on port T	[bar]	160			160	

3 MAIN CHARACTERISTICS SEALS and HYDRAULIC FLUIDS - for other fluids not included in below table, consult our technical office

Assembly position / location	Any position
Subplate surface finishing	Roughness index Ra 0,4 - flatness ratio 0,01/100 (ISO 1101)
Compliance	RoHS Directive 2011/65/EU as last update by 2015/65/EU REACH Regulation (EC) n°1907/2006
Ambient temperature	**Standard** = -30°C ÷ +70°C **/PE** option = -20°C ÷ +70°C **/BT** option = -40°C ÷ +70°C
Seals, recommended fluid temperature	NBR seals (standard) = -20°C ÷ +60°C, with HFC hydraulic fluids = -20°C ÷ +50°C FKM seals (/PE option)= -20°C ÷ +80°C HNBR seals (/BT option)= -40°C ÷ +60°C, with HFC hydraulic fluids = -40°C ÷ +50°C
Recommended viscosity	15÷100 mm²/s - max allowed range 2.8 ÷ 500 mm²/s
Max fluid contamination level	ISO4406 class 20/18/15 NAS1638 class 9, see also filter section at www.atos.com or KTF catalog

Hydraulic fluid	Suitable seals type	Classification	Ref. Standard
Mineral oils	NBR, FKM, HNBR	HL, HLP, HLPD, HVLP, HVLPD	DIN 51524
Flame resistant without water	FKM	HFDU, HFDR	ISO 12922
Flame resistant with water	NBR, HNBR	HFC	

4 REGULATED PRESSURE VERSUS FLOW DIAGRAMS based on mineral oil ISO VG 46 at 50°C

1 = HS
2 = KS

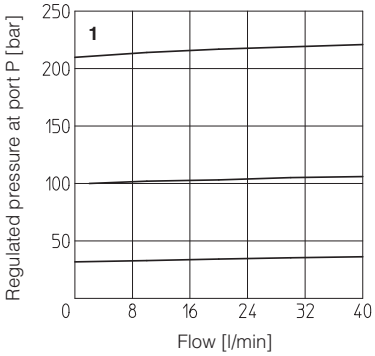

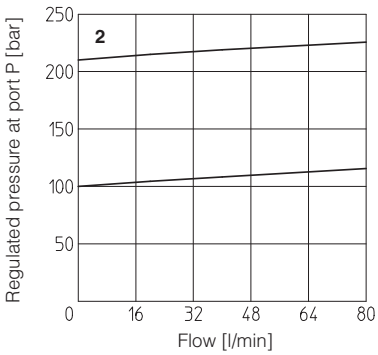

5 INSTALLATION DIMENSIONS [mm]

HS-011

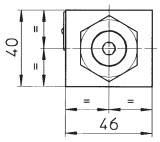

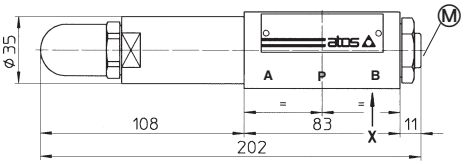

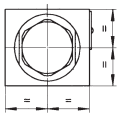

Ⓜ = Pressure gauge port = G 1/4"

Adjustment device for option/V

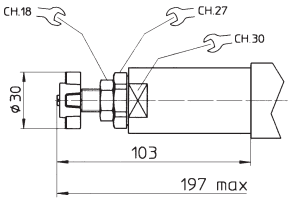

ISO 4401: 2005
Mounting surface: 4401-03-02-0-05
Diameter of ports A, B, P, T: Ø = 7,5 mm
Seals: 4 OR 108

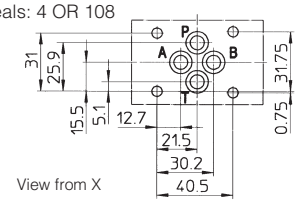

Adjustment device for option /VF and /VS

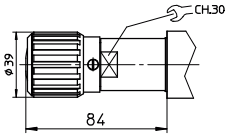

Fastening bolts: n°4 socket head screws M5. The lenght depends on number and type of modular elements associated.

Mass: 2 Kg

KS-011

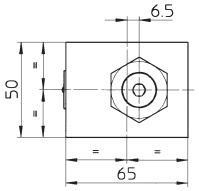

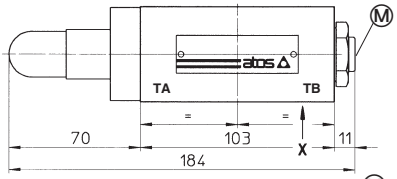

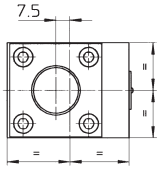

Ⓜ = Pressure gauge port = G 1/4"

Adjustment device for option/V

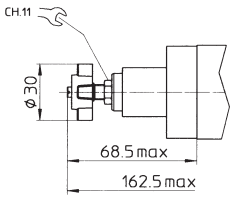

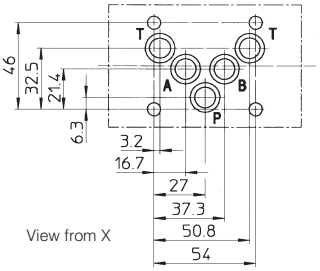

ISO 4401: 2005
Mounting surface: 4401-05-04-0-05
Diameter of ports A, B, P, T: Ø = 11,2 mm
Seals: 5 OR 2050

Fastening bolts: n°4 socket head screws M6. The lenght depends on number and type of modular elements associated.

Mass: 3 Kg

Modular reducing valves type HG, KG, JPG-2 and JPG-3

spool type, ISO 4401 sizes 06, 10, 16 and 25

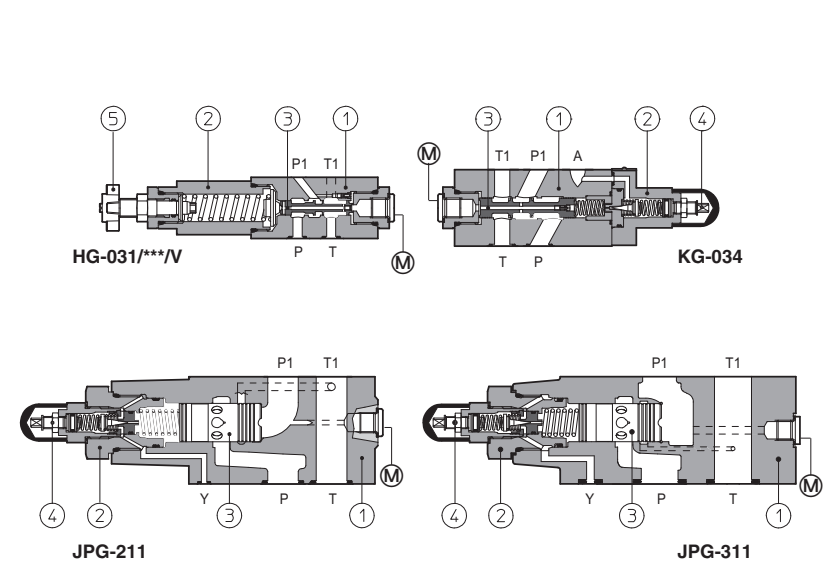

HG, KG, JPG are pressure reducing valves, spool type ③, designed to operate in oil hydraulic systems.
HG are direct, three way valves;
KG are double stage ① ②, three way valves;
JPG are double stage ① ②, two way valves.
Clockwise rotation increases the pressure.

Valve size and max flow:

HG = size 06 flow up to 50 l/min;
KG = size 10 flow up to 100 l/min;
JPG-2 = size 16 flow up to 250 l/min;
JPG-3 = size 25 flow up to 300 l/min;

Mounting surface:
ISO 4401 size 06, 10, 16 and **25**

Max pressure: **350 bar** for HG
315 bar for KG and JPG

1 MODEL CODE

HG-0	31	/	210	/	V	**	/	*

Modular pressure reducing valve, size:
HG-0 = 06 **JPG-2** = 16
KG-0 = 10 **JPG-3** = 25

Configuration, see section 2
two way (**only for JPG**):
11 = reduced pressure on P port
three way (**only for HG-0 and KG-0**):
31 = reduced pressure on P port
33 = reduced pressure on A port
34 = reduced pressure on B port

Pressure range

HG	KG	JPG
32 = 3 - 32 bar	**100** = 7 - 100 bar	**100** = 6 - 100 bar
50 = 2 - 50 bar	**210** = 8 - 210 bar	**210** = 70 - 210 bar
75 = 10 - 75 bar		
100 = 20 - 100 bar		
210 = 50 - 210 bar		

Options:
V = setting adjustment by handwheel instead of a grub screw protected by cap
Only for HG:
VF = regulating knob/**VS** = regulating knob with safety locking

Series number

Seals material, see section 3:
- = NBR
PE = FKM
BT = HNBR

2 HYDRAULIC CHARACTERISTICS

Hydraulic configuration

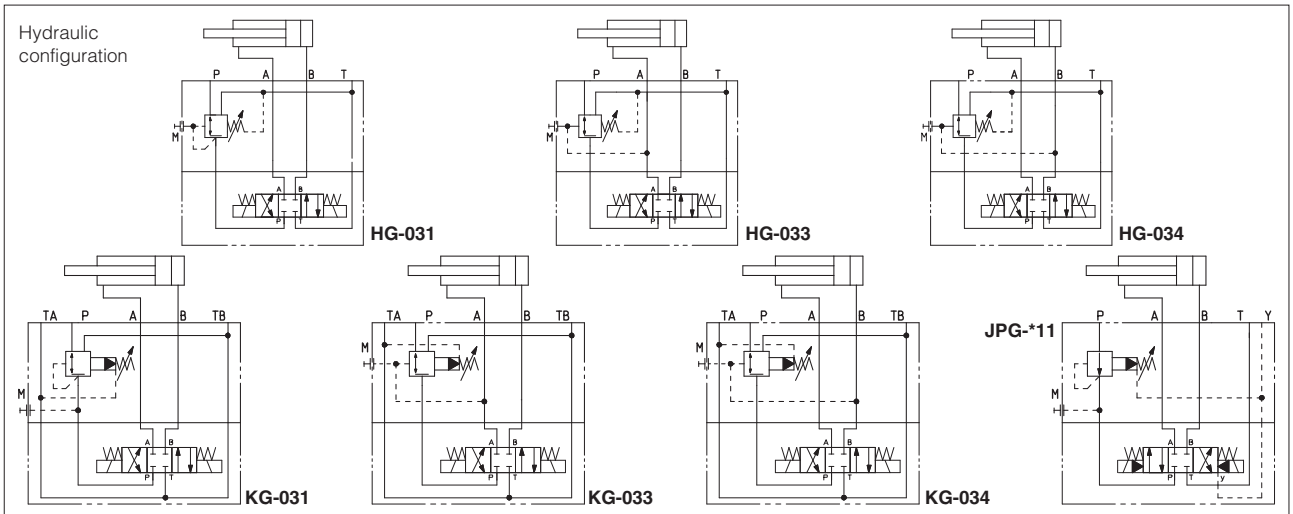

Valve model		HG-03*/32	HG-03*/50	HG-03*/75	HG-03*/100	HG-03*/210	KG-03*/100	KG-03*/210	JPG-211/100	JPG-211/210	JPG-311/100	JPG-311/210
Max flow	[l/min]	50					100		250		300	
Pressure range	[bar]	3 ÷ 32	2 ÷ 50	10 ÷ 75	20 ÷ 100	50 ÷ 210	7 ÷ 100	8 ÷ 210	6 ÷ 100	70 ÷ 210	6 ÷ 100	70 ÷ 210
Max inlet pressure	[bar]	350					315		315		315	
Max pressure on port T	[bar]	160					160		160		160	

3 MAIN CHARACTERISTICS, SEALS and HYDRAULIC FLUID - for other fluids not included in below table, consult our technical office

Assembly position / location	Any position
Subplate surface finishing	Roughness index Ra 0,4 - flatness ratio 0,01/100 (ISO 1101)
MTTFd values according to EN ISO 13849	150 years, for further details see technical table P007
Compliance	RoHS Directive 2011/65/EU as last update by 2015/863/EU REACH Regulation (EC) n°1907/2006
Ambient temperature	**Standard** = -30°C ÷ +80°C **/PE** option = -20°C ÷ +70°C **/BT** option = -40°C ÷ +70°C
Seals, recommended fluid temperature	NBR seals (standard) = -20°C ÷ +60°C, with HFC hydraulic fluids = -20°C ÷ +50°C FKM seals (/PE option)= -20°C ÷ +80°C HNBR seals (/BT option)= -40°C ÷ +60°C, with HFC hydraulic fluids = -40°C ÷ +50°C
Recommended viscosity	15÷100 mm²/s - max allowed range 2.8 ÷ 500 mm²/s
Max fluid contamination level	ISO4406 class 20/18/15 NAS1638 class 9, see also filter section at www.atos.com or KTF catalog

Hydraulic fluid	Suitable seals type	Classification	Ref. Standard
Mineral oils	NBR, FKM, HNBR	HL, HLP, HLPD, HVLP, HVLPD	DIN 51524
Flame resistant without water	FKM	HFDU, HFDR	ISO 12922
Flame resistant with water	NBR, HNBR	HFC	

4 DIAGRAMS OF HG-03*

based on mineral oil ISO VG 46 at 50°C

1 = regulated pressure variation versus flow:
- between use port and discharge port
- between inlet port and use port

2 = differential pressure variation versus flow between inlet port and use port

3 = differential pressure variation versus flow between use port and discharge port

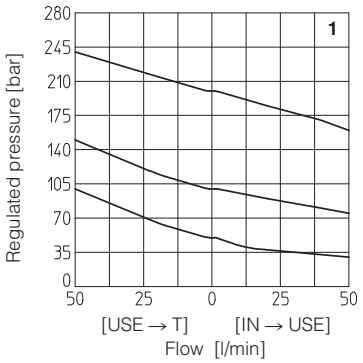

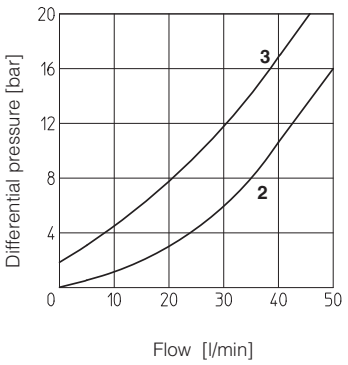

5 DIAGRAMS OF KG-03*

based on mineral oil ISO VG 46 at 50°C

1 = regulated pressure variation versus flow:
- between use port and discharge port
- between inlet port and use port

2 = differential pressure variation versus flow between inlet port and use port

3 = differential pressure variation versus flow between use port and discharge port

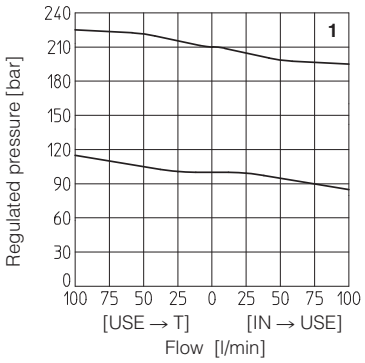

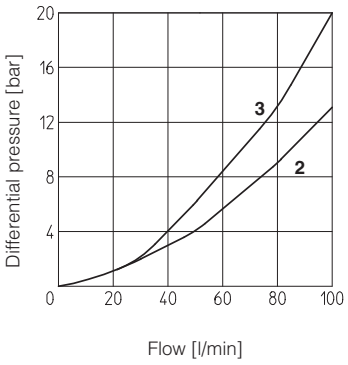

6 DIAGRAMS OF JPG-211

based on mineral oil ISO VG 46 at 50°C

1 = regulated pressure variation versus flow between inlet port and use port

2 = differential pressure variation versus flow between use port and discharge port

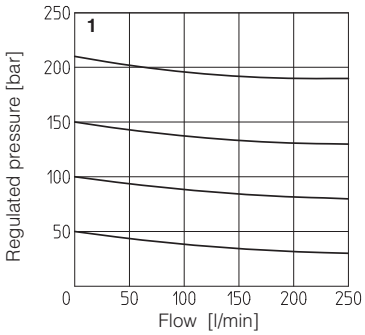

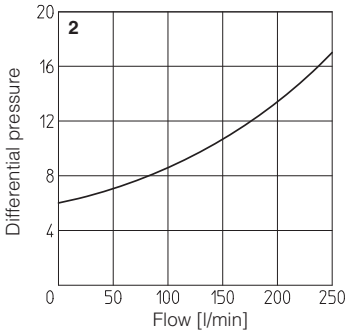

7 DIAGRAMS OF JPG-311

based on mineral oil ISO VG 46 at 50°C

1 = regulated pressure variation versus flow between inlet port and use port

2 = differential pressure variation versus flow between use port and discharge port

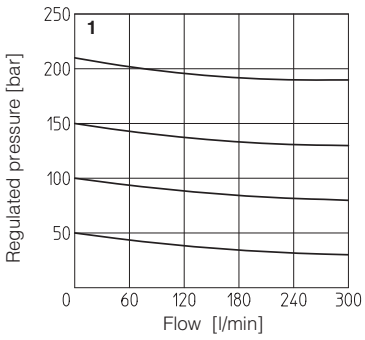

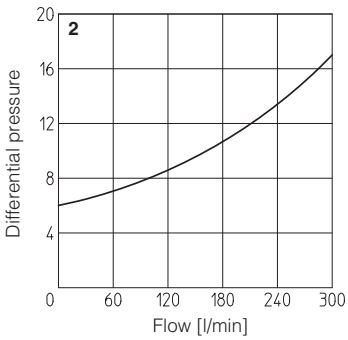

8 INSTALLATION DIMENSIONS OF HG-0 VALVES [mm]

HG-03*

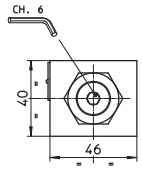

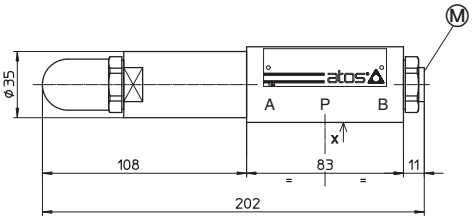

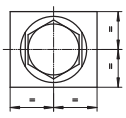

Ⓜ = Pressure gauge port = G 1/4"

Mass: 2,3 Kg

Adjustment device for option /V

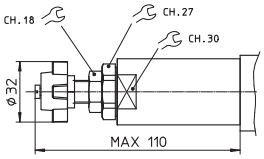

Adjustment device for option /VF and /VS

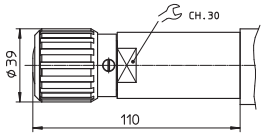

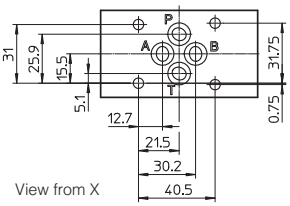

ISO 4401: 2005
Mounting surface: 4401-03-02-0-05
Diameter of ports A, B, P, T: Ø = 7,5 mm
Seals: 4 OR 108

Fastening bolts: n° 4 socket head screws M5. The lenght depends on number and type of modular elements associated.

9 INSTALLATION DIMENSIONS OF KG-0 VALVES [mm]

KG-03*

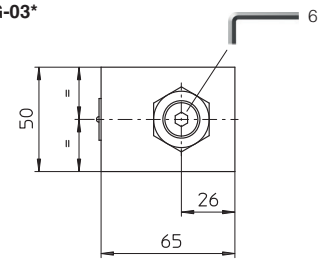

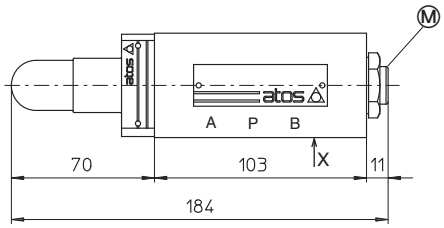

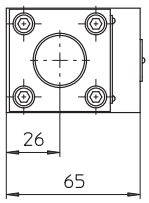

Ⓜ = Pressure gauge port = G 1/4"

Mass: 3,8 kg

Adjustment device for option /V

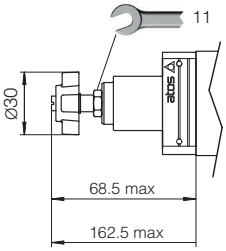

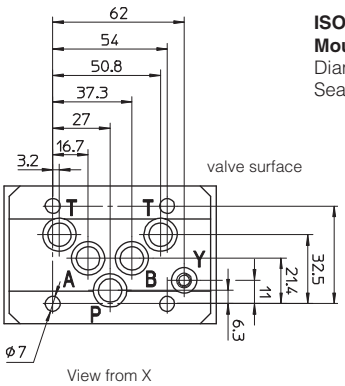

ISO 4401: 2005
Mounting surface: 4401-05-04-0-05
Diameter of ports A, B, P, T: Ø = 11,2 mm
Seals: 5 OR 2050

Fastening bolts: n° 4 socket head screws M6. The lenght depends on number and type of modular elements associated.

10 INSTALLATION DIMENSIONS OF JPG-2 VALVES [mm]

JPG-211

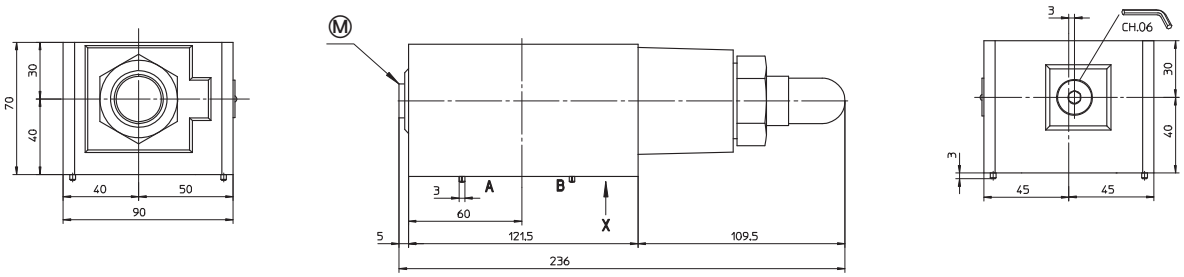

Ⓜ = Pressure gauge port = G 1/4”

Mass: 9 Kg

Adjustment device for option /V

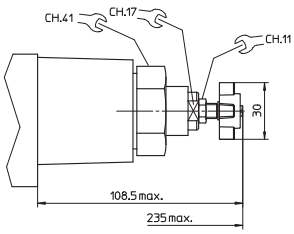

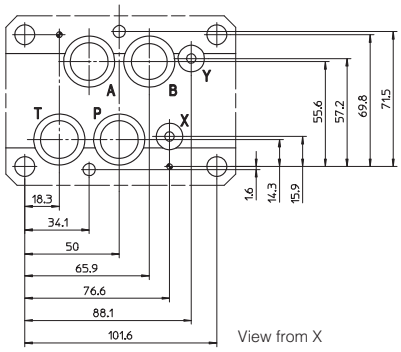

ISO 4401: 2005
Mounting surface: 4401-07-07-0-05
Diameter of ports A, B, P, T: Ø = 20 mm
Diameter of ports X, Y: Ø 7 mm
Seals: 4 OR 130: 2 OR 109

Fastening bolts: n° 4 socket head screws M10 and n° 2 M6. The lenght depends on number and type of modular elements associated.

11 INSTALLATION DIMENSIONS OF JPG-3 VALVES [mm]

JPG-311

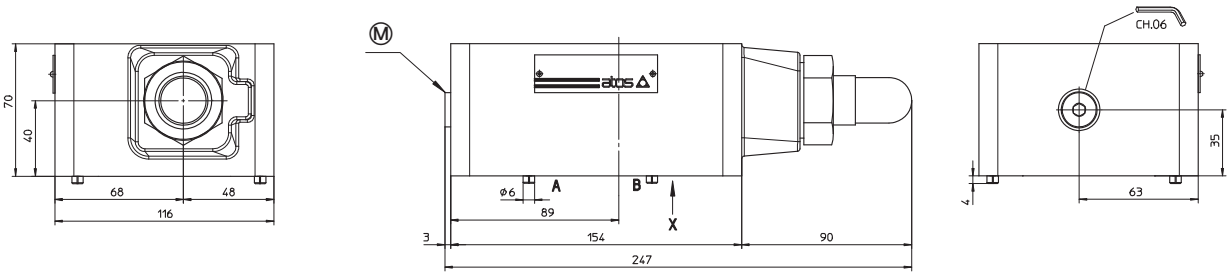

Ⓜ = Pressure gauge port = G 1/4”

Mass: 9 Kg

Adjustment device for option /V

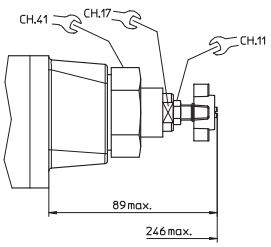

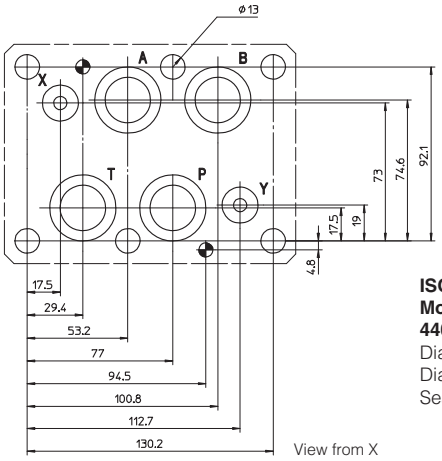

ISO 4401: 2005
Mounting surface:
4401-08-08-0-05 (without port L)
Diameter of ports A, B, P, T: Ø = 24 mm
Diameter of ports X, Y: Ø 7 mm
Seals: 4 OR 4112: 2 OR 3056

Fastening bolts: n° 6 socket head screws M12. The lenght depends on number and type of modular elements associated.

Modular pressure compensators type HC, KC, and JPC-2

ISO 4401 sizes 06, 10 and 16

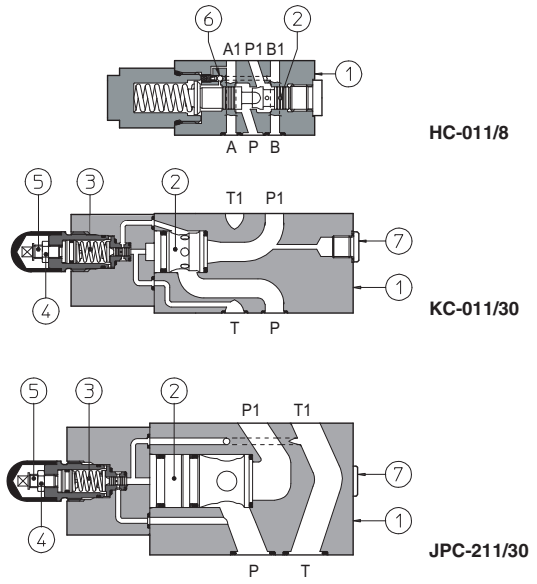

① body
② poppet of main stage
③ pilot stage
④ locking nut
⑤ setting screw
⑥ check valve
⑦ pressure gauge port

HC, **KC** and **JPC** are two way pressure compensators for modular assembling with on/off and proportional directional control valves.

They keep a constant differential pressure (Δp) across port P and port A or B in order to maintain a constant flow rate against pressure variations. Automatic piloting selection ⑥ is included.

Fixed Δp is available only for size 06. Adjustment of desired Δp is operated by loosening the locking nut ④ and turning the setting screw ⑤ of pilot device.
Clockwise rotation increases Δp.

HC = size 06, flow up to 50 l/min.
KC = size 10, flow up to 100 l/min.
JPC = size 16, flow up to 200 l/min.

Mounting surface:
ISO 4401 size 06, 10, 16

Max pressure: **350 bar**

1 MODEL CODE

HC-0	-	11	/	30	/	M	**	/	*

Modular pressure compensator, size:
HC-0 = 06
KC-0 = 10 **(1)**
JPC-2 = 16

Configuration, see section 2
11 = two way execution with constant Δp beetween P port and user port

Fixed Δp (only for size 06):
8 = 8 bar

Adjustable Δp (for all sizes):
30 = 5 - 35 bar

Option (only for HC-011/30)
M = fit for manometer port P1

Series number

Seals material, see section 3:
- = NBR
PE = FKM
BT = HNBR

(1) To be used only with direct valve type DKZOR

2 HYDRAULIC CHARACTERISTICS

Hydraulic configuration

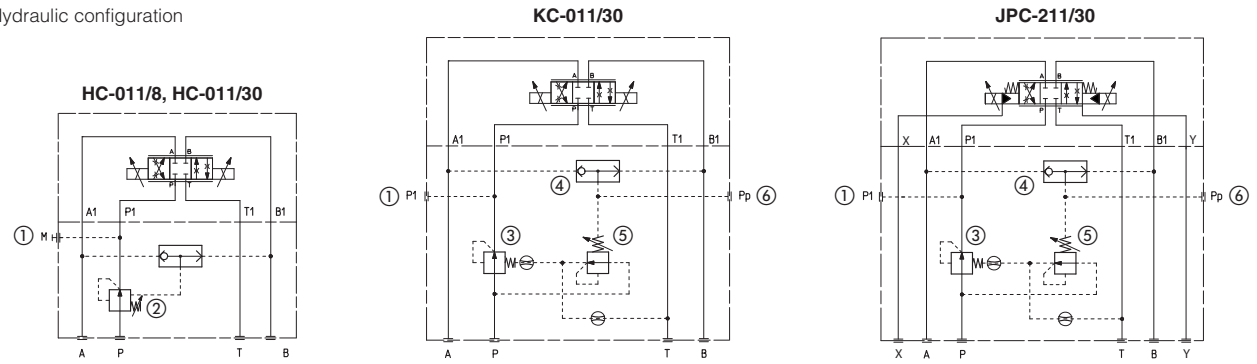

① Pressure gauge port (not for HC-011/8)
② Settable (not for HC-011/8)
③ Two way compensator
④ Piloting selection
⑤ Adjustment of Δp on pilot device
⑥ Pilot port Pp

Valve model		HC-011/8	HC-011/30	KC-011/30	JPC-211/30
Max flow	[l/min]	50		100	200
Max inlet pressure	[bar]	350			
Regulating Δp (1)	[bar]	8	5 - 35	5 - 35	

(1) The Δp for single flow path is fixed at 8 bar or is adjustable between 5 and 35 bar; it corresponds to values of total Δp across the valve of 16 bar or between 10 and 70 bar. Threaded plugged ports Pp and P1 are suitable for pressure adjustment or check of Δp value for single flow path (reading difference between Pp and P1 values).

3 MAIN CHARACTERISTICS, SEALS and HYDRAULIC FLUID - for other fluids not included in below table, consult our technical office

Assembly position / location	Any position		
Subplate surface finishing	Roughness index Ra 0,4 - flatness ratio 0,01/100 (ISO 1101)		
Compliance	RoHS Directive 2011/65/EU as last update by 2015/863/EU REACH Regulation (EC) n°1907/2006		
Ambient temperature	**Standard** = -30°C ÷ +80°C **/PE** option = -20°C ÷ +70°C **/BT** option = -40°C ÷ +70°C		
Seals, recommended fluid temperature	NBR seals (standard) = -20°C ÷ +60°C, with HFC hydraulic fluids = -20°C ÷ +50°C FKM seals (/PE option)= -20°C ÷ +80°C HNBR seals (/BT option)= -40°C ÷ +60°C, with HFC hydraulic fluids = -40°C ÷ +50°C		
Recommended viscosity	15÷100 mm²/s - max allowed range 2.8 ÷ 500 mm²/s		
Max fluid contamination level	ISO4406 class 20/18/15 NAS1638 class 9, see also filter section at www.atos.com or KTF catalog		
Hydraulic fluid	**Suitable seals type**	**Classification**	**Ref. Standard**
Mineral oils	NBR, FKM, HNBR	HL, HLP, HLPD, HVLP, HVLPD	DIN 51524
Flame resistant without water	FKM	HFDU, HFDR	ISO 12922
Flame resistant with water	NBR, HNBR	HFC	

4 INSTALLATION DIMENSIONS [mm]

HC-011/8

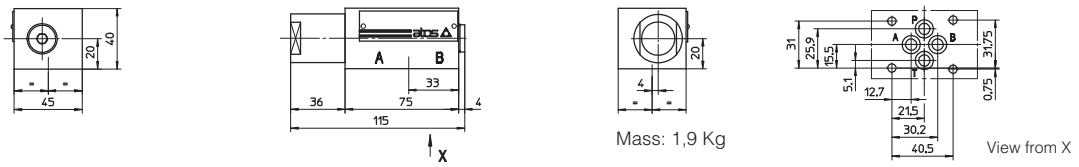

Mass: 1,9 Kg

P1 (Pressure gauge port)

HC-011/30

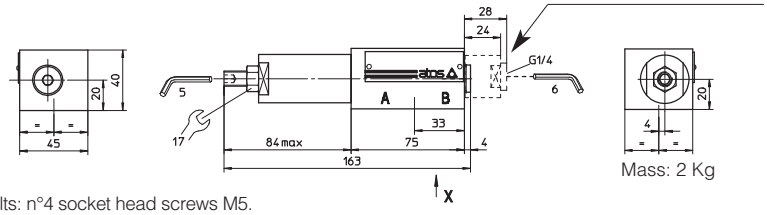

Mass: 2 Kg

Fastening bolts: n°4 socket head screws M5.
The lenght depends on number and type of modular elements associated.

ISO 4401: 2005
Mounting surface: 4401-03-02-0-05
Diameter of ports
A, B, P, T: Ø = 7,5 mm (max)
Seals: 4 OR 108

KC

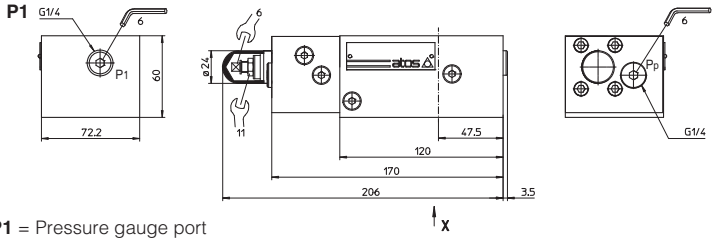

Mass: 4,2 Kg

P1 = Pressure gauge port

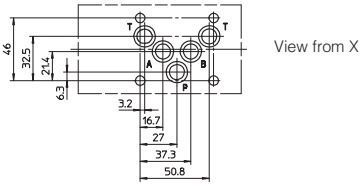

Fastening bolts: n°4 socket head screws M6.
The lenght depends on number and type of modular elements associated.

ISO 4401: 2005
Mounting surface: 4401-05-04-0-05
Diameter of ports
A, B, P, T: Ø = 11,2 mm (max)
Seals: 2 OR 108, 5 OR 2050

JPC

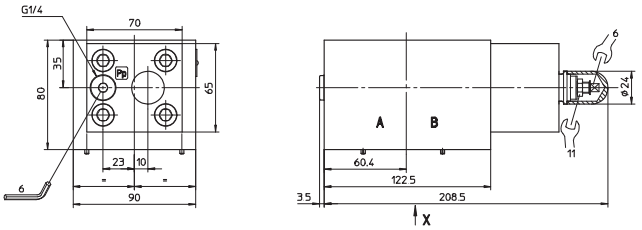

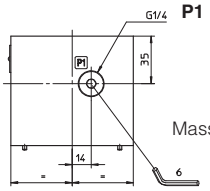

Mass: 6 Kg

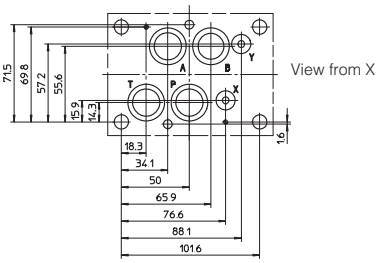

P1 = Pressure gauge port

Fastening bolts:
n°4 socket head screws M10 and n°2 M6.
The lenght depends on number and type of modular elements associated.

ISO 4401: 2005
Mounting surface: 4401-07-07-0-05
Diameter of ports
A, B, P, T: Ø = 20 mm
Diameter of ports X, Y: Ø = 7 mm
Seals: 4 OR 130; 2 OR 109

Modular fast/slow valves type DHQ

compensated flow control and by-pass solenoid valve, ISO 4401 size 06

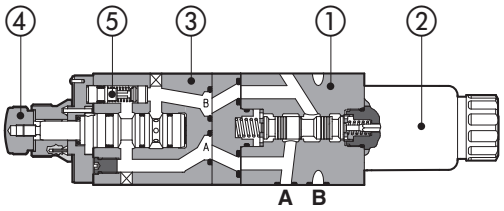

DHQ-013/*-EX*

① by-pass solenoid valve for fast/slow speed switching
② solenoid coil
③ 2 way pressure compensated flow valve for slow speed regulation
④ graduated knob for flow adjustment
⑤ check valve for free reverse flow

DHQ are modular valves for fast/slow speed control of hydraulic actuators.

They combine a pressure compensated flow control valve ③ type QV-06 (Tab. C210) for the slow speed regulation and a solenoid operated by-pass valve ① for the fast/slow speed switching.

Depending on execution **C** or **O**, the low speed is performed with solenoid de-energized or energized.

The low speed regulation is obtained by turning the graduated micrometer knob ④ of flow control valve. Clockwise rotation decreases the flow Optional versions with locking key on the adjustment knob are available on request.

The flow control valve is provided with a built-in check valve ⑤ to allow the free flow in the opposite direction.

Mounting surface: **ISO 4401 size 06**
Max controlled flow: up to **1,5-6-11-16-24 l/min**
Free flow up to **40 l/min**.
Max pressure: up to **250 bar**

1 MODEL CODE

DHQ-0	13	/	C	/	6	/	K	-	E	X	24DC	**	/	*
Modular flow control valve, pressure compensated											**Voltage code**, see section 7	Series number		Seals material, see section 5: **-** = NBR **PE** = FKM **BT** = HNBR

Configuration, see section 2
meter OUT control:
13 = on port A
14 = on port B
16 = on port T
meter IN control:
11 = on port P
23 = on port A
24 = on port B

Execution
C = flow controlled when solenoid is de-energized
O = flow controlled when solenoid is energized

Maximum adjustable flow (low speed)
00 = without flow control valve
1 = 1,5 l/min; **6** = 6 l/min; **11** = 11 l/min;
16 = 16 l/min; **24** = 24 l/min;

Options:
K = with lock key for the setting knob **V** = without by-pass check valve

Type of solenoid:
E = solenoid OE for AC and DC supply with **cURus** certification

00-AC = AC solenoids without coils
00-DC = DC solenoids without coils
X = without connector
See section 10 for available connectors, to be ordered separately
Coils with special connectors, see section 11
XJ = AMP Junior Timer connector
XK = Deutsch connector
XS = Lead Wire connection

2 CONFIGURATIONS

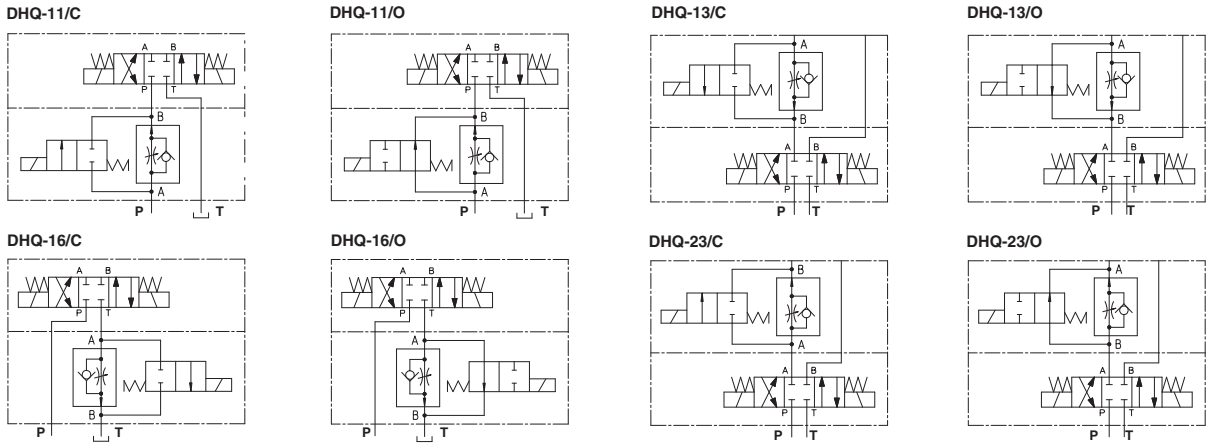

DHQ-014/*, DHQ-024/* are similar to corresponding DHQ-013/*, DHQ-023/* but control the flow through port B of solenoid valve

3 GENERAL CHARACTERISTICS

Assembly position	Any position
Subplate surface finishing to ISO 4401	Acceptable roughness index, Ra 0,4 - flatness ratio 0,01/100
Ambient temperature range	**Standard** = -30°C ÷ +70°C **/PE** option = -20°C ÷ +70°C **/BT** option = -40°C ÷ +70°C
Storage temperature range	**Standard** = -30°C ÷ +80°C **/PE** option = -20°C ÷ +80°C **/BT** option = -40°C ÷ +80°C
Surface protection	Body: zinc coating with black passivation Coil: zinc nickel coating (DC version) plastic incapsulation (AC version)
Compliance	CE to Low Voltage Directive 2014/35/EU RoHS Directive 2011/65/EU as last update by 2015/863/EU REACH Regulation (EC) n°1907/2006

4 HYDRAULIC CHARACTERISTICS

Valve model	**/1**	**/6**	**/11**	**/16**	**/24**
Max regulated flow [l/min]	1,5	6	11	16	24
Min regulated flow [cm^3/min]	50	50	50	50	50
Regulating Δp [bar]	3	3	5	6,5	8
Max reverse flow through check valve [l/min]	24				
Max free flow through by-pass valve [l/min]	40				
Max pressure [bar]	250				

5 SEALS AND HYDRAULIC FLUID - for other fluids not included in below table, consult our technical office

Seals, recommended fluid temperature	NBR seals (standard) = -20°C ÷ +80°C, with HFC hydraulic fluids = -20°C ÷ +50°C FKM seals (/PE option) = -20°C ÷ +80°C HNBR seals (/BT option)= -40°C ÷ +60°C, with HFC hydraulic fluids = -40°C ÷ +50°C		
Recommended viscosity	15÷100 mm^2/s - max allowed range 2,8 ÷ 500 mm^2/s		
Max fluid contamination level	ISO4406 class 20/18/15 NAS1638 class 9, see also filter section at www.atos.com or KTF catalog		
Hydraulic fluid	**Suitable seals type**	**Classification**	**Ref. Standard**
Mineral oils	NBR, FKM	HL, HLP, HLPD, HVLP, HVLPD	DIN 51524
Flame resistant without water	FKM	HFDU, HFDR	ISO 12922
Flame resistant with water	NBR	HFC	

6 ELECTRICAL CHARACTERISTICS

Insulation class	**H** (180°C) for DC coils; **F** (155°C) for AC coils Due to the occurring surface temperatures of the solenoid coils, the European standards EN ISO 13732-1 and EN ISO 4413 must be taken into account
Protection degree to DIN EN 60529	**IP 65** (with connectors 666, 667 correctly assembled)
Relative duty factor	100%
Supply voltage and frequency	See section 7
Supply voltage tolerance	± 10%

7 COIL VOLTAGE

External supply nominal voltage ± 10%	**Voltage code**	Type of connector	Power consumption (2)	Code of spare coil DHE
12 DC	**12 DC**	666 or 667	30 W	COE-12DC
14 DC	**14 DC**			COE-14DC
24 DC	**24 DC**			COE-24DC
28 DC	**28 DC**			COE-28DC
48 DC	**48 DC**			COE-48DC
110 DC	**110 DC**			COE-110DC
125 DC	**125 DC**			COE-125DC
220 DC	**220 DC**			COE-220DC
24/50 AC	**24/50/60 AC**		58 VA (3)	COE-24/50/60AC (1)
48/50 AC	**48/50/60 AC**			COE-48/50/60AC (1)
110/50 AC	**110/50/60 AC**			COE-110/50/60AC (1)
230/50 AC	**230/50/60 AC**			COE-230/50/60AC (1)
115/50 AC	**115/60 AC**		80 VA (3)	COE-115/60AC
230/50 AC	**230/60 AC**			COE-230/60AC
110/50 AC - 120/60 AC	**110 RC**	669	30 W	COE-110RC
230/50 AC - 230/60 AC	**230 RC**			COE-230RC

(1) Coil can be supplied also with 60 Hz of voltage frequency: in this case the performances are reduced by 10 ÷15% and the power consumption is 52 VA.
(2) Average values based on tests preformed at nominal hydraulic condition and ambient/coil temperature of 20°C.
(3) When solenoid is energized, the inrush current is approx 3 times the holding current.

8 OPTIONS

K = lock key for the setting knob
V = without by-pass check valve

option K

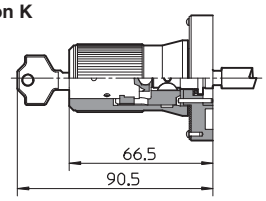

standard version

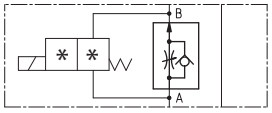

option /V

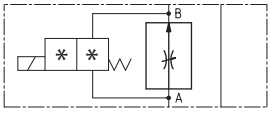

9 DIAGRAMS based on mineral oil ISO VG 46 at 50°C

9.1 Flow regulation diagram (low speed)

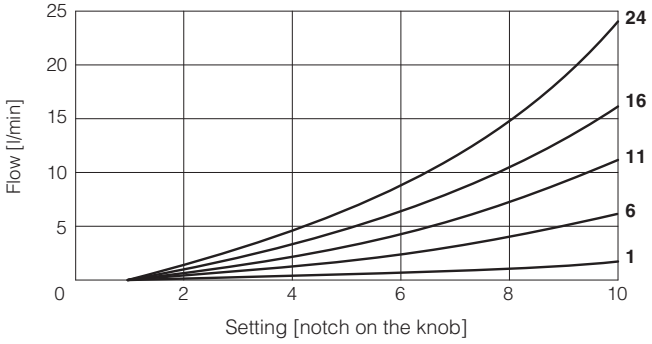

1 = DHQ-0*/*/1 **6** = DHQ-0*/*/6 **11** = DHQ-0*/*/11
16= DHQ-0*/*/16 **24** = DHQ-0*/*/24

9.2 Q/Δp diagram through the check valve for reverse free flow

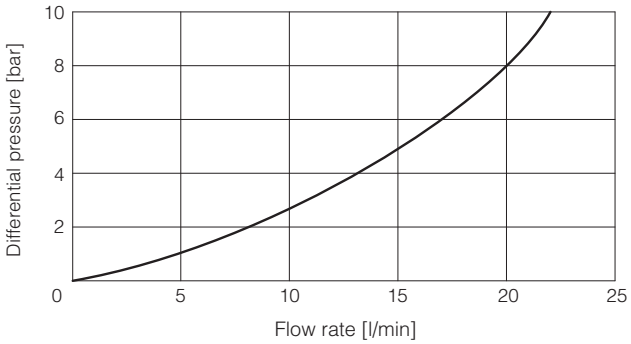

9.3 Operating limits of by-pass solenoid valve

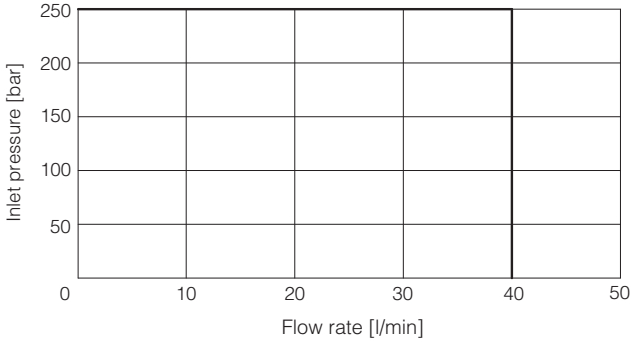

9.4 Q/Δp diagram through the by-pass solenoid valve

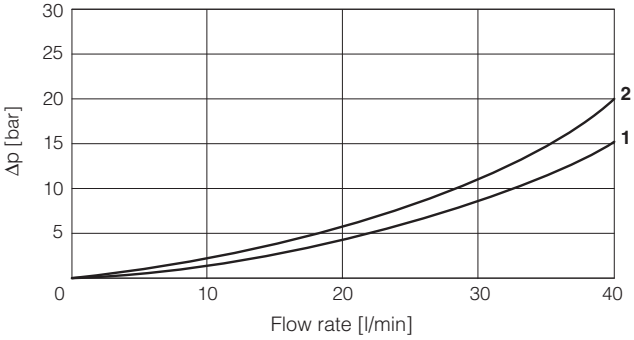

1 = DHQ-013, DHQ-014
2 = DHQ-011, DHQ-016, DHQ-023, DHQ-024

10 ELECTRIC CONNECTORS ACCORDING TO DIN 43650 (to be ordered separately, see tech table K500)

666 = standard connector IP-65, suitable for direct connection to electric supply source
667 = as 666, but with built-in signal led. Available for power supply voltage 24 AC or DC, 110 AC or DC, 220 AC or DC
669 = with built-in rectifier bridge for supplying DC coils by alternate current (AC 110V and 230V - Imax 1A)

11 COIL WITH SPECIAL CONNECTORS only for voltage supply 12, 14, 24, 28 VDC

AMP Junior timer connector

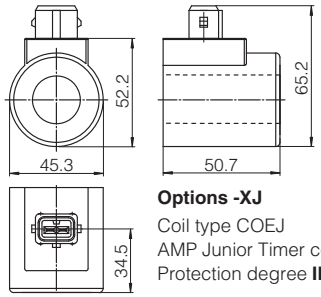

Options -XJ
Coil type COEJ
AMP Junior Timer connector
Protection degree **IP67**

Deutsch connector DT-04-2P

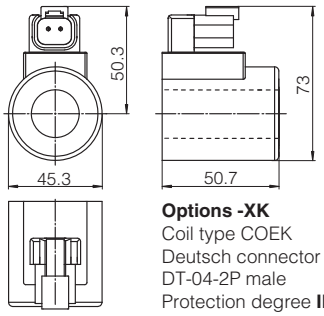

Options -XK
Coil type COEK
Deutsch connector
DT-04-2P male
Protection degree **IP67**

Lead Wire connection

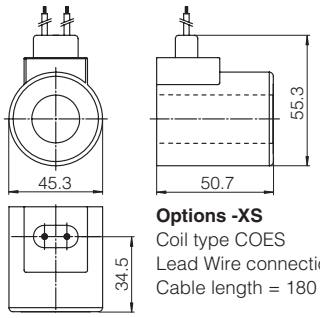

Options -XS
Coil type COES
Lead Wire connection
Cable length = 180 mm

Note: for the electric characteristics refer to standard coils features - see section 7

12 INSTALLATION DIMENSIONS [mm]

ISO 4401: 2005
Mounting surface: 4401-03-02-0-05
Diameter of ports P, A, B, T: Ø = 7,5 mm (max)
Seals: 4 OR 108

Fastening bolts: 4 socket head screws M5.
The length depends on number and type
of modular elements associated

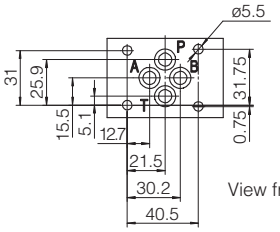

View from X

P = PRESSURE PORT
A, B = USE PORT
T = TANK PORT

DHQ-011/*-EX
DHQ-016/*-EX

DHQ-013/*-EX
DHQ-023/*-EX

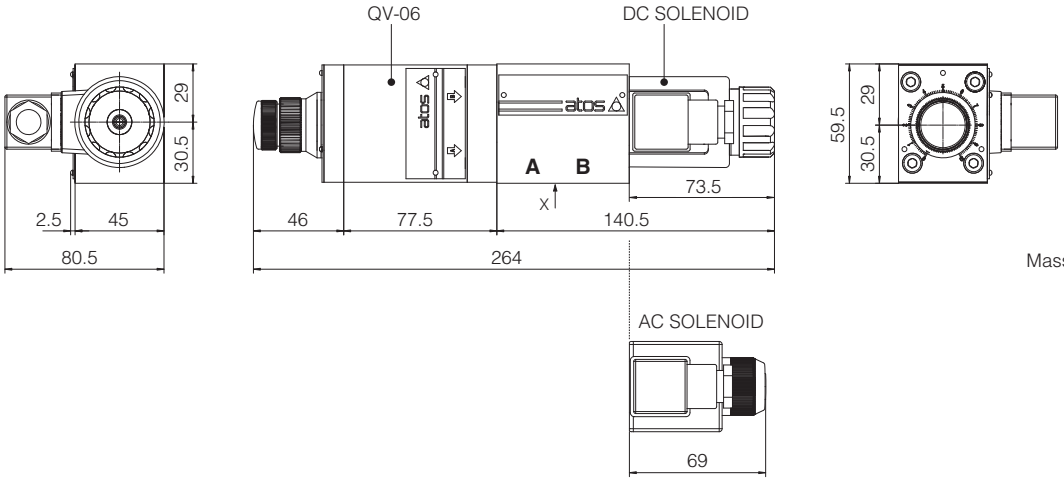

Mass: 2,5 kg

DHQ-014/*-EX

DHQ-024/*-EX

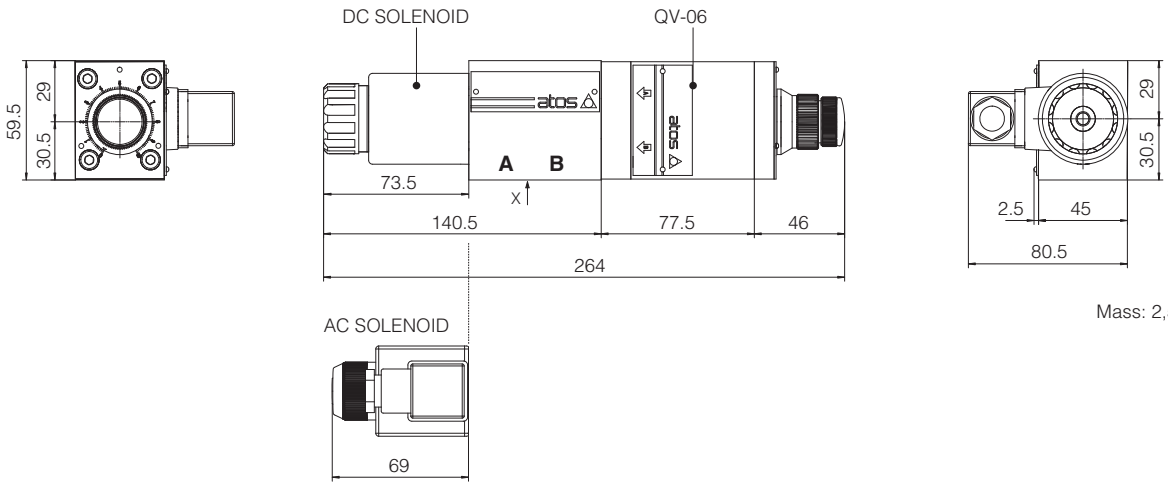

Mass: 2,5 kg

Overall dimensions refer to valves with connectors type 666

Modular throttle valves type HQ, KQ, JPQ

flow control, ISO 4401 sizes 06, 10, 16 and 25

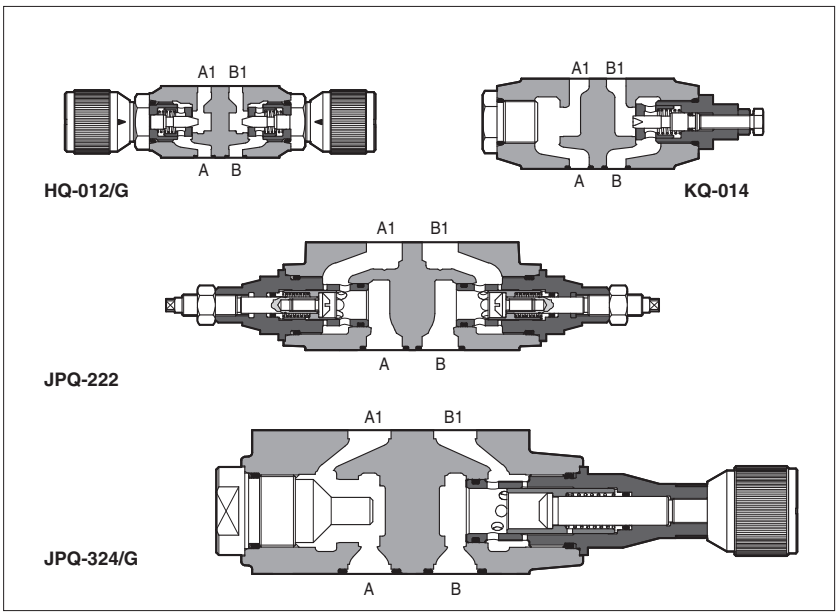

HQ, **KQ** and **JPQ** are flow throttling valves, not compensated, and with check valve to allow free flow in the opposite direction.
The flow adjustement is done by turning the setting screw in the normal model.
Optional versions with a graduate micrometer knob are available on request.
Clockwise rotation increases the throttling (passage reduced).

Valve size and max flow:
HQ-0 = size 06, flow up to 25 l/min for /U option, up to 80 l/min for standard
KQ-0 = size 10, flow up to 160 l/min
JPQ-2 = size 16, flow up to 200 l/min
JPQ-3 = size 25, flow up to 300 l/min

Mounting surface:
ISO 4401 size 06, 10, 16 and **25**
Max pressure: **350 bar** (HQ, JPQ)
315 bar (KQ)

1 MODEL CODE

HQ-0	13	/	G	**	/	*

Modular flow control valve, size:
HQ-0 = 06
KQ-0 = 10
JPQ-2 = 16
JPQ-3 = 25

Configuration, see section 2
meter OUT control:
12 = double, acting on port A and B
13 = single, acting on port A
14 = single, acting on port B
meter IN control:
22 = double, acting on port A and B
23 = single, acting on port A
24 = single, acting on port B

Options:
U = better accuracy for reduced flow (only for HQ-0)
G = adjustment by graduated micrometer

Series number

Seals material, see section 3:
- = NBR
PE = FKM
BT = HNBR

2 VALVE CONFIGURATION

Meter OUT control

HQ-012
KQ-012
JPQ-212
JPQ-312

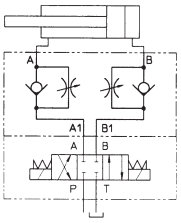

HQ-013
KQ-013
JPQ-213
JPQ-313

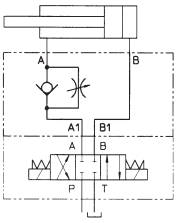

HQ-014
KQ-014
JPQ-214
JPQ-314

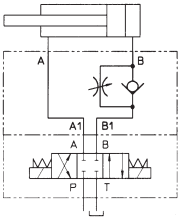

Meter IN control

HQ-022
KQ-022
JPQ-222
JPQ-322

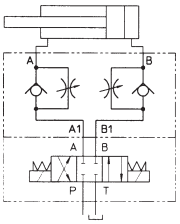

HQ-023
KQ-023
JPQ-223
JPQ-323

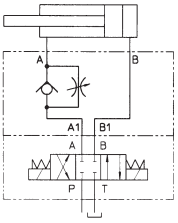

HQ-024
KQ-024
JPQ-224
JPQ-324

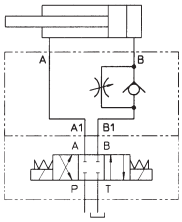

3 MAIN CHARACTERISTICS, SEALS and HYDRAULIC FLUID - for other fluids not included in below table, consult our technical office

Assembly position / location	Any position
Subplate surface finishing	Roughness index Ra 0,4 - flatness ratio 0,01/100 (ISO 1101)
MTTFd values according to EN ISO 13849	150 years, for further details see technical table P007
Compliance	RoHS Directive 2011/65/EU as last update by 2015/863/EU REACH Regulation (EC) n°1907/2006
Ambient temperature	Standard execution = -30°C ÷ +70°C /PE option = -20°C ÷ +70°C /BT option = -40°C ÷ +70°C
Seals, recommended fluid temperature	NBR seals (standard) = -20°C ÷ +60°C, with HFC hydraulic fluids = -20°C ÷ +50°C FKM seals (/PE option)= -20°C ÷ +80°C HNBR seals (/BT option)= -40°C ÷ +60°C, with HFC hydraulic fluids = -40°C ÷ +50°C
Recommended viscosity	15÷100 mm²/s - max allowed range 2.8 ÷ 500 mm²/s
Max fluid contamination level	ISO4406 class 20/18/15 NAS1638 class 9, see also filter section at www.atos.com or KTF catalog

Hydraulic fluid	Suitable seals type	Classification	Ref. Standard
Mineral oils	NBR, FKM, HNBR	HL, HLP, HLPD, HVLP, HVLPD	DIN 51524
Flame resistant without water	FKM	HFDU, HFDR	ISO 12922
Flame resistant with water	NBR, HNBR	HFC	

4 DIAGRAMS OF HQ-0 based on mineral oil ISO VG 46 at 50°C

1 = Regulation diagram at Δp 10 bar (1.1 = option /U)
2 = Regulation diagram at Δp 30 bar (2.1 = option /U)
3 = Regulation diagram at Δp 50 bar (3.1 = option /U)
4 = Q/Δp diagram for free flow through the non-return valve

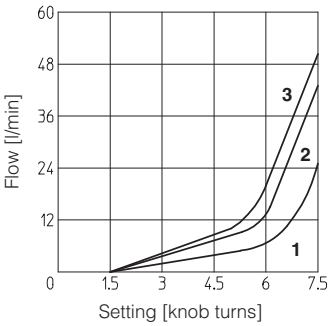

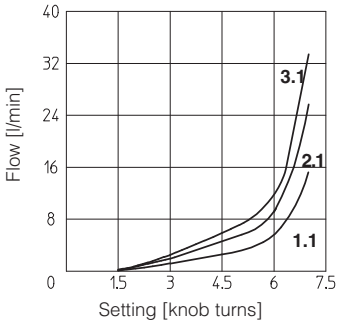

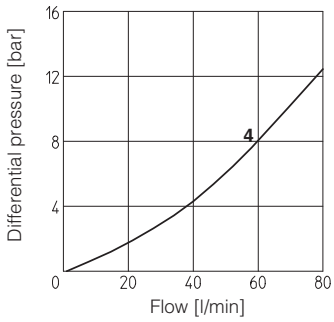

5 DIAGRAMS OF KQ-0 based on mineral oil ISO VG 46 at 50°C

1 = Regulation diagram at Δp 10 bar
2 = Regulation diagram at Δp 30 bar
3 = Regulation diagram at Δp 50 bar
4 = Q/Δp diagram for free flow through the non-return valve

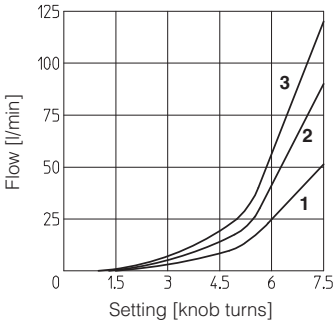

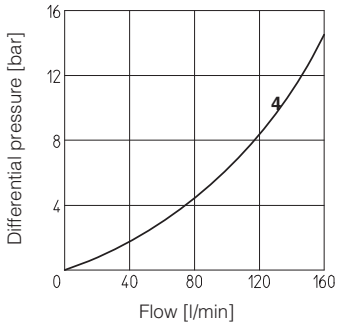

6 DIAGRAMS OF JPQ-2 based on mineral oil ISO VG 46 at 50°C

1 = Regulation diagram at Δp 10 bar
2 = Regulation diagram at Δp 30 bar
3 = Regulation diagram at Δp 50 bar
4 = Q/Δp diagram for free flow through the non-return valve

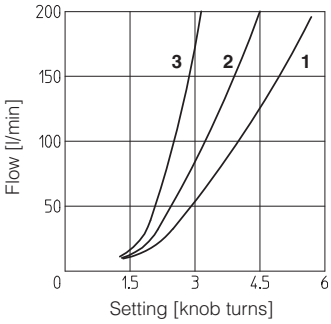

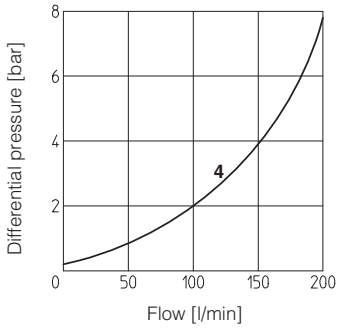

7 DIAGRAMS OF JPQ-3 based on mineral oil ISO VG 46 at 50°C

1 = Regulation diagram at Δp 10 bar
2 = Regulation diagram at Δp 30 bar
3 = Regulation diagram at Δp 50 bar
4 = Q/Δp diagram for free flow through the non-return valve

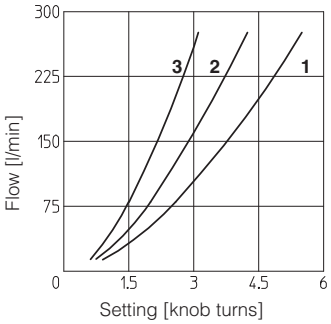

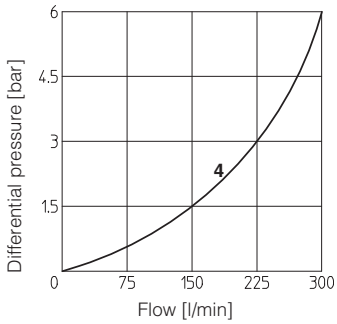

8 INSTALLATION DIMENSIONS OF HQ-0 VALVES [mm]

HQ-012
HQ-022

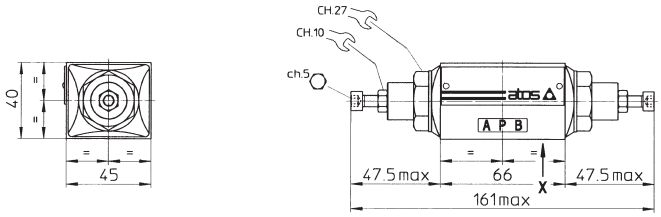

Mass: 1,1 Kg

HQ-013
HQ-014
HQ-023
HQ-024

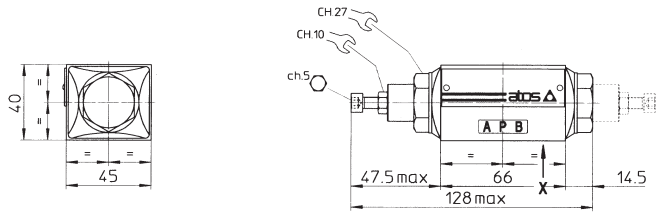

In version -014 and -024 the regulating element is on side of port B (dotted line) instead of side of port A.

Mass: 1,2 Kg

/G OPTION

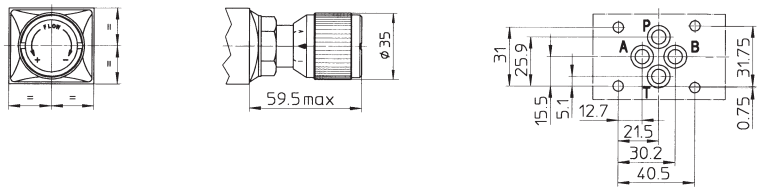

ISO 4401: 2005
Mounting surface: 4401-03-02-0-05
Diameter of ports A, B, P, T: Ø = 7,5 mm (max)
Seals: 4 OR 108

Fastening bolts: n° 4 socket head screws M5. The lenght depends on number and type of modular elements associated.

9 INSTALLATION DIMENSIONS OF KQ-0 VALVES [mm]

KQ-012
KQ-022

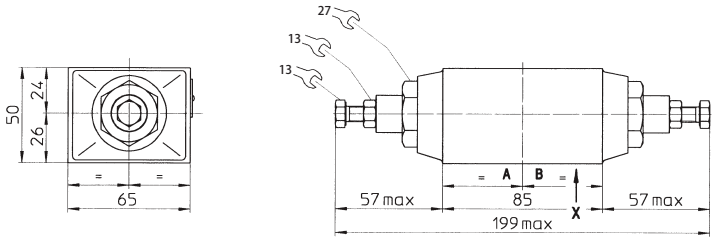

Mass: 2 Kg

KQ-013
KQ-014
KQ-023
KQ-024

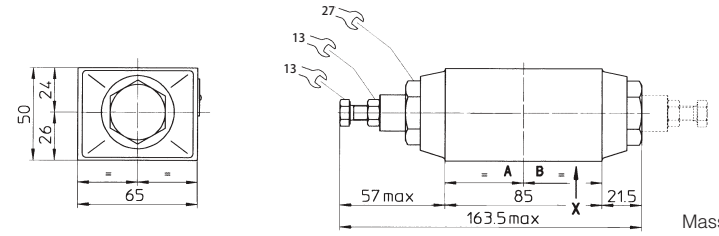

In version -014 and -024 the regulating element is on side of port B (dotted line) instead of side of port A.

Mass: 2,2 Kg

/G OPTION

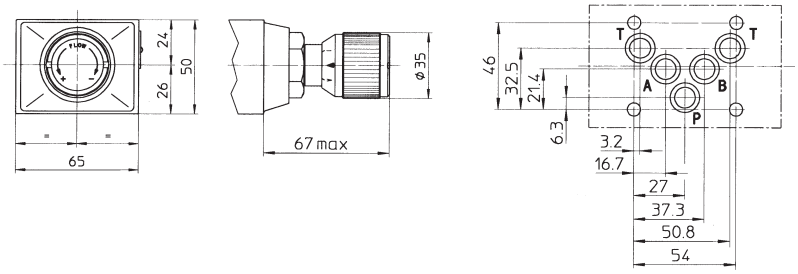

ISO 4401: 2005
Mounting surface: 4401-05-04-0-05
Diameter of ports, A, B, P, T: Ø = 11,2 mm (max)
Seals: 5 OR 2050

Fastening bolts: n° 4 socket head screws M6. The lenght depends on number and type of modular elements associated.

10 INSTALLATION DIMENSIONS OF JPQ-2 VALVES [mm]

JPQ-212
JPQ-222

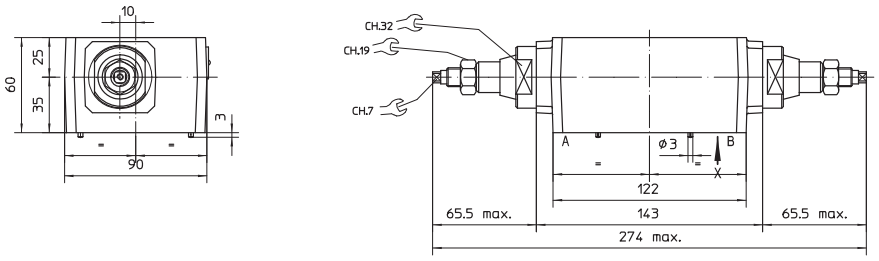

Mass: 4,6 Kg

JPQ-213
JPQ-214
JPQ-223
JPQ-224

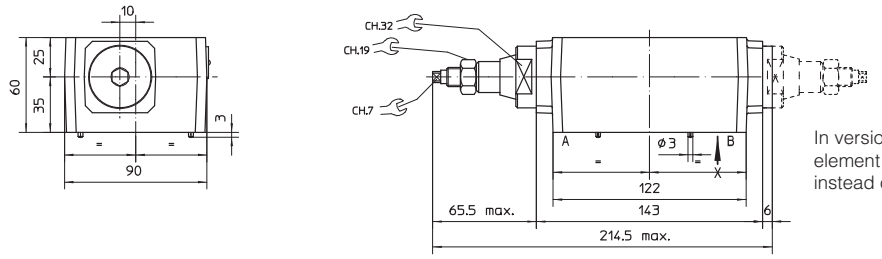

In version -214 and -224 the regulating element is on side of port B (dotted line) instead of side of port A.

Mass: 4,3 Kg

/G OPTION

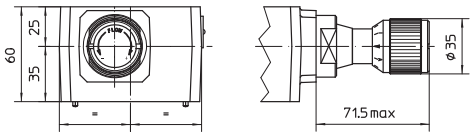

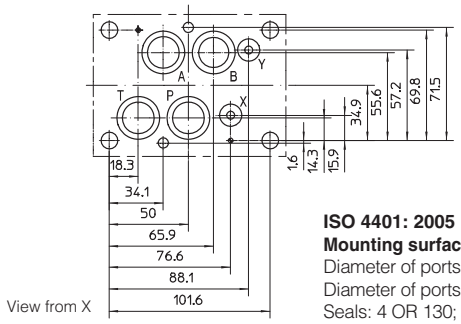

View from X

ISO 4401: 2005
Mounting surface: 4401-07-07-0-05
Diameter of ports A, B, P, T: Ø = 20 mm
Diameter of ports X, Y: Ø = 7 mm
Seals: 4 OR 130; 2 OR 109

Fastening bolts: n° 4 socket head screws M10 and n° 2 M6. The lenght depends on number and type of modular elements associated.

11 INSTALLATION DIMENSIONS OF JPQ-3 VALVES [mm]

JPQ-312
JPQ-322

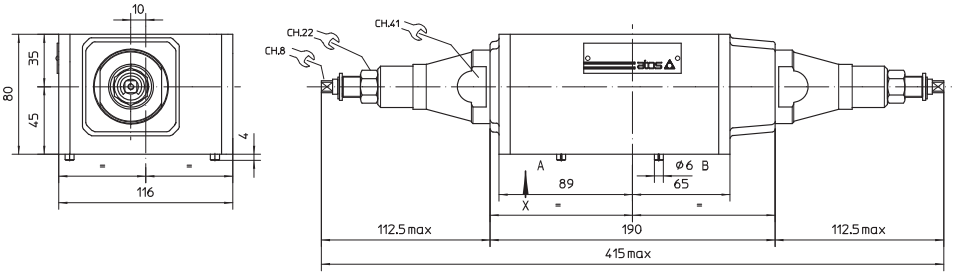

Mass: 10,7 Kg

JPQ-313
JPQ-314
JPQ-323
JPQ-324

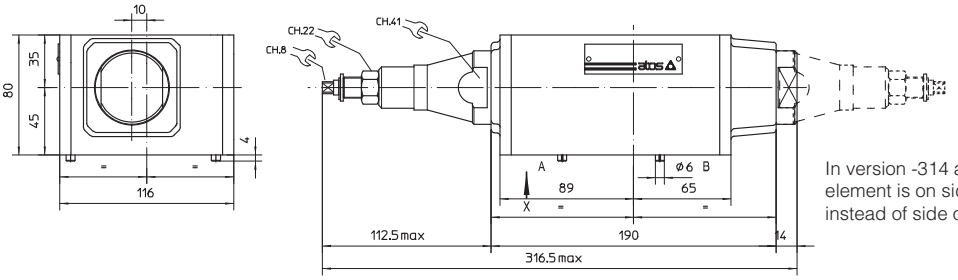

In version -314 and -324 the regulating element is on side of port B (dotted line) instead of side of port A.

Mass: 9,5 Kg

/G OPTION

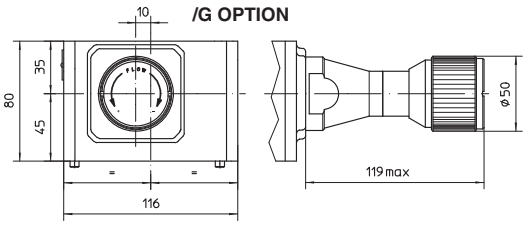

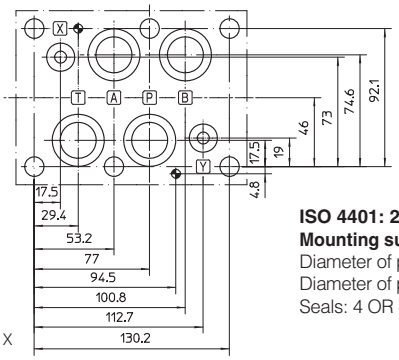

View from X

ISO 4401: 2005
Mounting surface: 4401-08-08-0-05
Diameter of ports A, B, P, T: Ø = 24 mm
Diameter of ports X, Y: Ø = 7 mm
Seals: 4 OR 4112; 2 OR 3056

Fastening bolts: n° 6 socket head screws M12. The lenght depends on number and type of modular elements associated.

Modular check valves type HR, KR, JPR

direct or pilot operated, ISO 4401 sizes 06, 10, 16 and 25

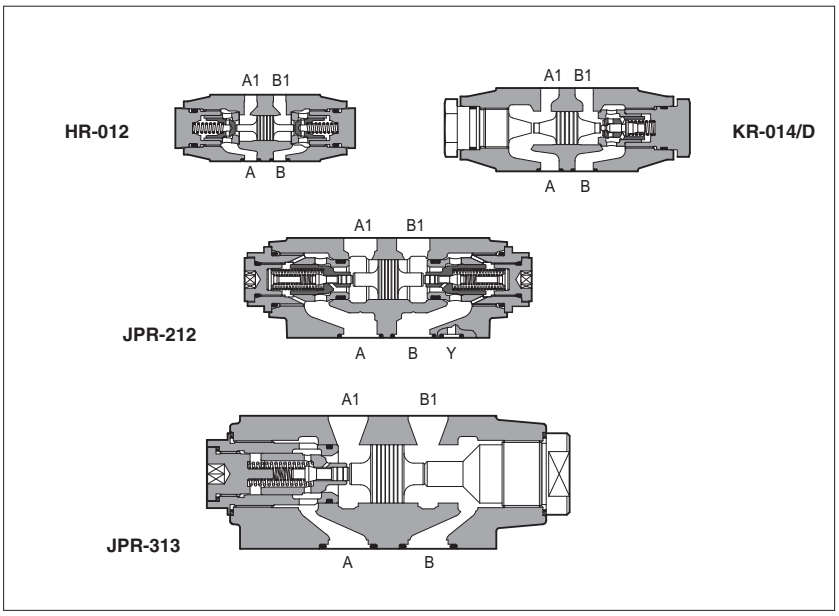

HR, KR are check valves available as direct or pilot operated models.
JPR are pilot operated check valves.

Optional versions with decompression are available on request for some models of KR.

HR-0 = size 06: flow up to 60 l/min, pressure up to 350 bar.

KR-0 = size 10: flow up to 120 l/min, pressure up to 315 bar.

JPR-2 = size 16: flow up to 200 l/min, pressure up to 350 bar.

JPR-3 = size 25: flow up to 300 l/min, pressure up to 350 bar.

Valves are designed to operate in hydraulic systems with hydraulic mineral oil or synthetic fluid having similar lubricating characteristics.

1 MODEL CODE

HR-0	12	/	4	/	*	**	/	*

Modular check valve, size:
HR-0 = 06 **JPR-2** = 16
KR-0 = 10 **JPR-3** = 25

Configuration, see section 2
direct operated (only for HR and KR):
02 = double, acting on port A and B
03 = single, acting on port A
04 = single, acting on port B
11 = single, acting on port P
16 = single, acting on port T

pilot operated:
12 = double, acting on port A and B
13 = single, acting on port A
14 = single, acting on port B

Spring cracking pressure:
for HR and KR
– = 0,5 bar (std.) **4** = 4 bar
2 = 2 bar **8** = 8 bar

for JPR
– = 0,5 bar (std)

Options (only for KR-012, -013, -014):
D = with decompression (only with cracking pressure standard = 1 bar)

Series number

Seals material, see section 3:
- = NBR
PE = FKM
BT = HNBR

2 VALVE CONFIGURATION

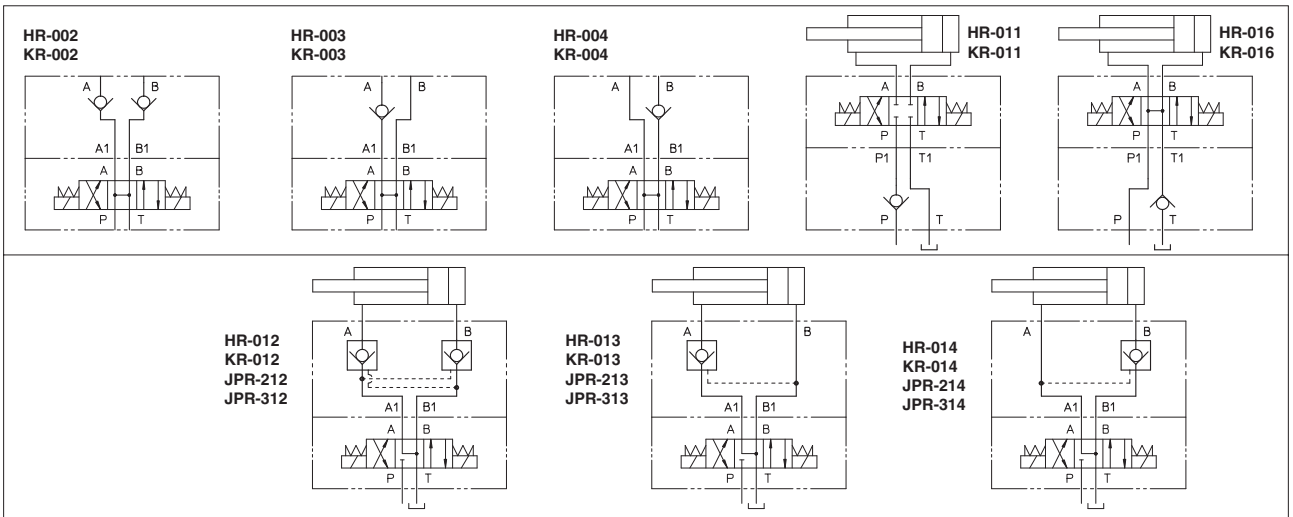

The pilote pressure applied through ports A or B opens the valve acting on ports B and A, respectively.
The minimum pilot pressure is a function of the area ratio, see the following table.

VALVE TYPE	AREA RATIO
HR	3,3:1
KR	3,3:1 (standard); 11:1 (option /D decompression system)
JPR-2	13,6:1 (standard version equipped with decompression system)
JPR-3	17:1 (standard version equipped with decompression system)

3 MAIN CHARACTERISTICS, SEALS and HYDRAULIC FLUID - for other fluids not included in below table, consult our technical office

Assembly position / location	Any position		
Subplate surface finishing	Roughness index Ra 0,4 - flatness ratio 0,01/100 (ISO 1101)		
MTTFd values according to EN ISO 13849	150 years, for further details see technical table P007		
Compliance	RoHS Directive 2011/65/EU as last update by 2015/863/EU REACH Regulation (EC) n°1907/2006		
Ambient temperature	**Standard** = -30°C ÷ +80°C **/PE** option = -20°C ÷ +70°C **/BT** option = -40°C ÷ +70°C		
Seals, recommended fluid temperature	NBR seals (standard) = -20°C ÷ +60°C, with HFC hydraulic fluids = -20°C ÷ +50°C FKM seals (/PE option)= -20°C ÷ +80°C HNBR seals (/BT option)= -40°C ÷ +60°C, with HFC hydraulic fluids = -40°C ÷ +50°C		
Recommended viscosity	15÷100 mm^2/s - max allowed range 2.8 ÷ 500 mm^2/s		
Max fluid contamination level	ISO4406 class 20/18/15 NAS1638 class 9, see also filter section at www.atos.com or KTF catalog		
Hydraulic fluid	**Suitable seals type**	**Classification**	**Ref. Standard**
Mineral oils	NBR, FKM, HNBR	HL, HLP, HLPD, HVLP, HVLPD	DIN 51524
Flame resistant without water	FKM	HFDU, HFDR	ISO 12922
Flame resistant with water	NBR, HNBR	HFC	

4 DIAGRAMS OF HR-0

based on mineral oil ISO VG 46 at 50°C

Flow through check valve:

1 = A→A1; B→B1 of HR-012, HR-013, HR-014

2 = A1→A; B1→B of HR-012, HR-013, HR-014

3 = HR-011, HR-016

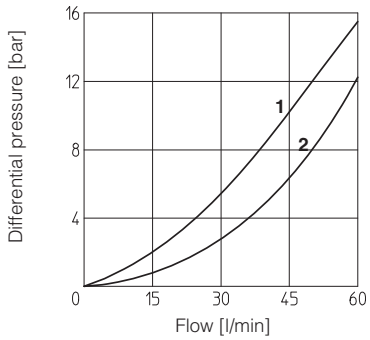

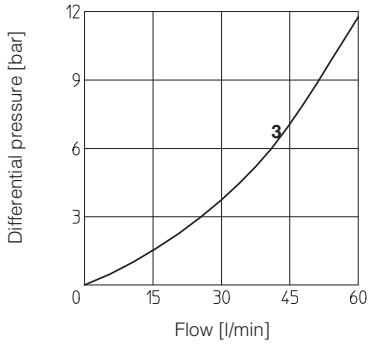

5 DIAGRAMS OF KR-0

based on mineral oil ISO VG 46 at 50°C

Flow through check valve:

1 = A→A1; B→B1 of KR-012, KR-013, KR-014

2 = A1→A; B1→B of KR-012, KR-013, KR-014

3 = KR-011, KR-016

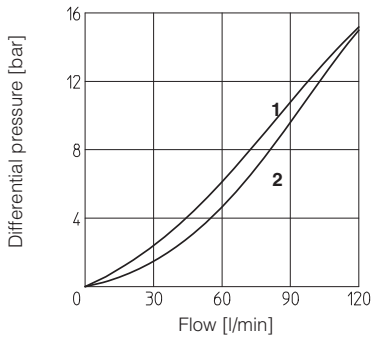

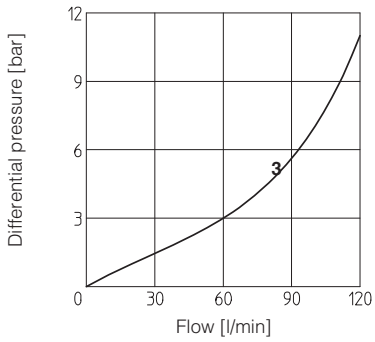

6 DIAGRAMS OF JPR-2

based on mineral oil ISO VG 46 at 50°C

Flow through check valve:

1 = A→A1; B→B1 of JPR-212, JPR-213, JPR-214

2 = A1→A; B1→B of JPR-212, JPR-213, JPR-214

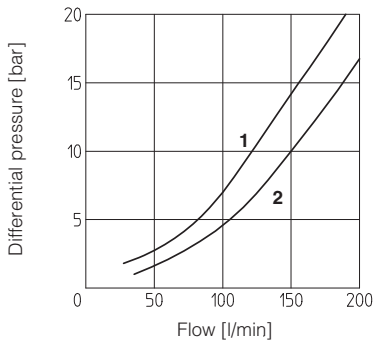

7 DIAGRAMS OF JPR-3

based on mineral oil ISO VG 46 at 50°C

Flow through check valve:

1 = A→A1; B→B1 of JPR-312, JPR-313, JPR-314

2 = A1→A; B1→B of JPR-312, JPR-313, JPR-314

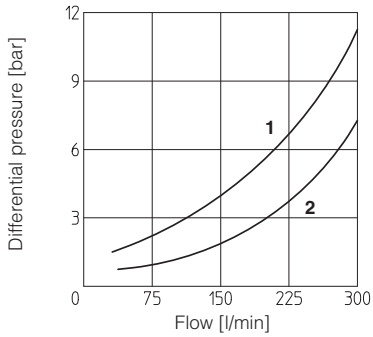

8 INSTALLATION DIMENSIONS OF HR-0 VALVES [mm]

HR-002
HR-003
HR-004
HR-012
HR-013
HR-014

LATERAL VIEW

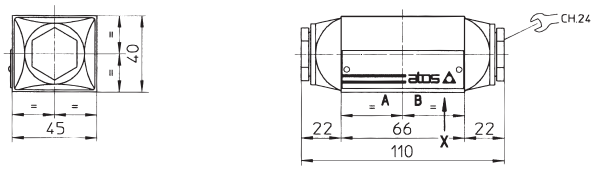

Mass: 1 Kg

HR-011
HR-016

LATERAL VIEW

Mass: 0,7 Kg

ISO 4401: 2005
Mounting surface: 4401-03-02-0-05
Diameter of ports A, B, P, T: Ø = 7,5 mm (max)
Seals: 4 OR 108

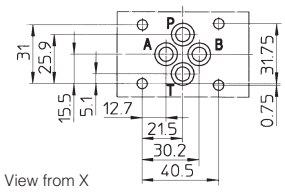

View from X

Fastening bolts: n° 4 socket head screws M5. The lenght depends on number and type of modular elements associated.

9 INSTALLATION DIMENSIONS OF KR-0 VALVES [mm]

KR-012
KR-002
KR-003
KR-004
KR-013
KR-014

LATERAL VIEW

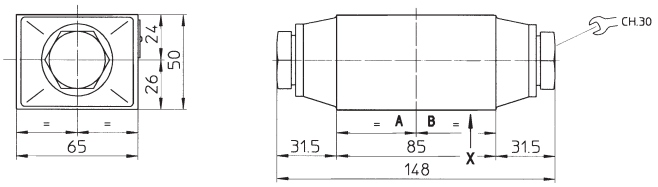

Massa: 2,3 Kg

KR-016

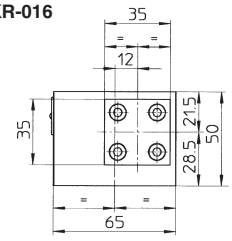

LATERAL VIEW

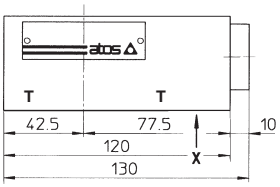

Mass: 2,5 Kg

KR-011

LATERAL VIEW

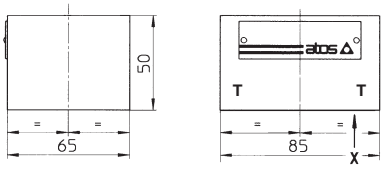

Mass: 1,7 Kg

ISO 4401: 2005
Mounting surface: 4401-05-04-0-05
Diameter of ports, A, B, P, T: Ø = 11,2 mm (max)
Seals: 5 OR 2050

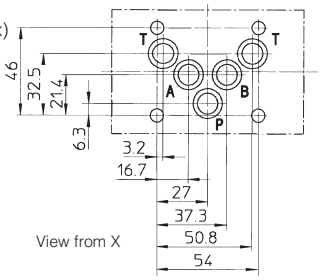

View from X

Fastening bolts: n° 4 socket head screws M6. The lenght depends on number and type of modular elements associated.

10 INSTALLATION DIMENSIONS OF JPR-2 VALVES [mm]

JPR-212
JPR-213
JPR-214

LATERAL VIEW

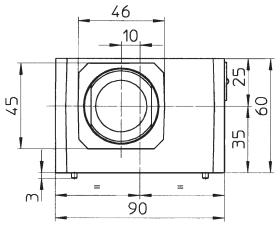

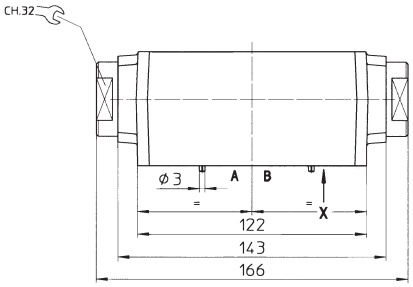

LATERAL VIEW

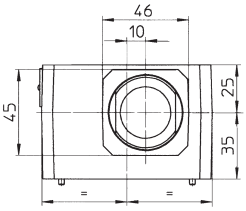

Mass: 4,4 Kg

ISO 4401: 2005
Mounting surface: 4401-07-07-0-05
Diameter of ports A, B, P, T: Ø = 20 mm
Diameter of ports X, Y: Ø = 7 mm
Seals: 4 OR 130; 2 OR 109

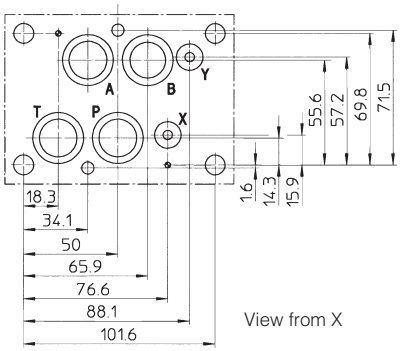

View from X

Fastening bolts: n° 4 socket head screws M10 and n° 2 M6. The lenght depends on number and type of modular elements associated.

11 INSTALLATION DIMENSIONS OF JPR-3 VALVES [mm]

JPR-312
JPR-313
JPR-314

LATERAL VIEW B

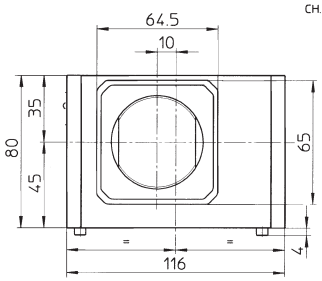

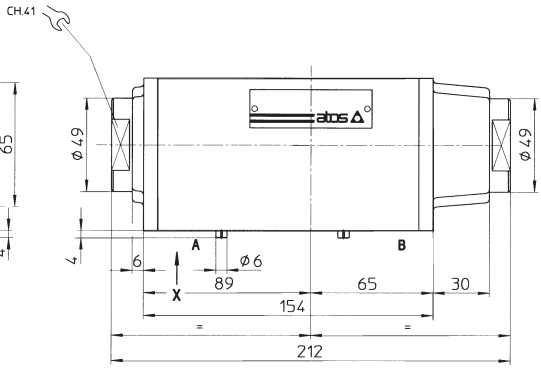

LATERAL VIEW A

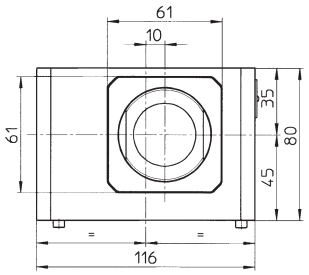

Mass: 9,9 Kg

ISO 4401: 2005
Mounting surface: 4401-08-08-0-05
Diameter of ports A, B, P, T: Ø = 24 mm
Diameter of ports X, Y: Ø = 7 mm
Seals: 4 OR 4112; 2 OR 3056

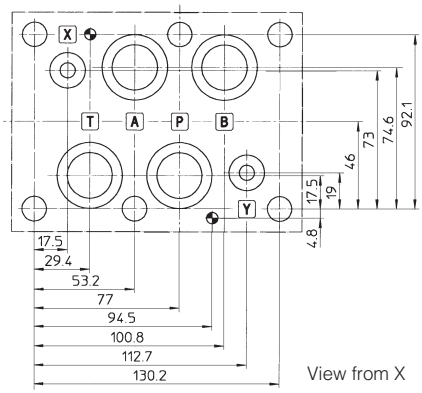

View from X

Fastening bolts: n° 6 socket head screws M12. The lenght depends on number and type of modular elements associated.

ISO cartridges type SC LI

2 way slip-in, directional, pressure, flow, check controls

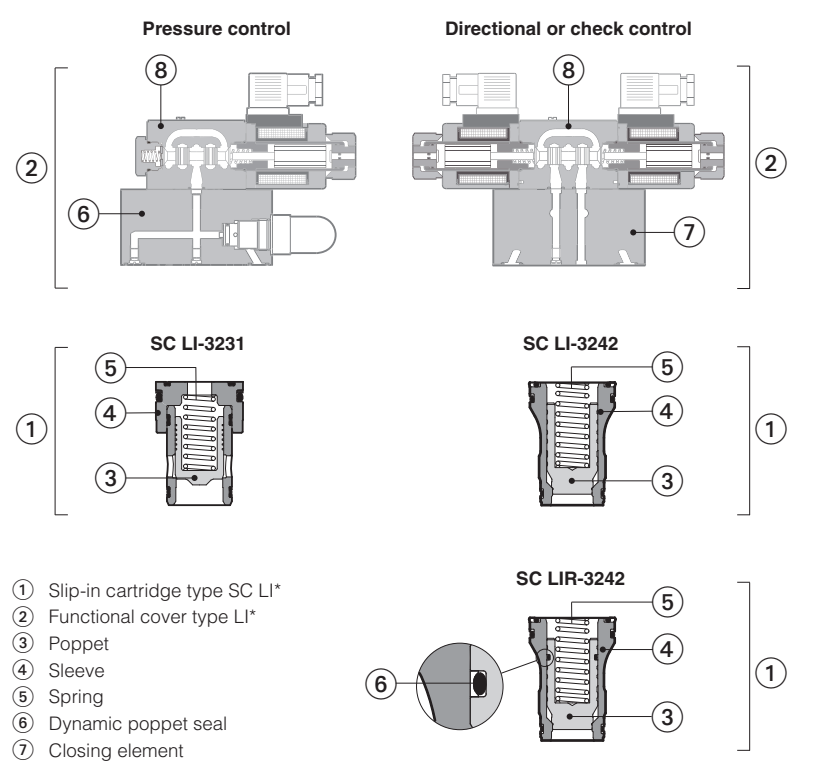

2way slip-in cartridges conforming with ISO 7368 standard cavities for installation in compact manifolds. They are available in several versions to perform directional, pressure, flow and check controls in combination with relevant functional covers.
They permit to control very high flow rates at low pressure drops, reducing the manifold dimensions respect to subplate valves.

The slip-in cartridge ① is made by a poppet ③ sliding into a sleeve ④ and kept in closed position by a spring ⑤ available with different cracking pressure valves.

Optional version **SC LIR** with sealed poppet execution is available for applications requiring improved leak-free features as hydraulic circuits with accumulators or with vertical loads.

The functional covers ② are made by a closing element with ISO 7368 mounting surface ⑦ provided with internal piloting lines for the cartridge operation. They can be equipped with pilot valves ⑧ and devices performing the specific control (pressure relief, flow metering, directional, check)

Sizes: **16 to 100** ISO 7368

Max flow up to **9000 l/min** at Δp 5 bar
Max pressure **420 bar**

1 MODEL CODE

SC LI	R	-	16	43	1	*	/	*

Cartridge according to ISO 7368

- = standard execution
R = sealed poppet execution (only for poppet type 32, 33, 42, 43) poppet type 32 not available for size 100 - see section 6

Size - see section 6

16	**40**	**80**
25	**50**	**100**
32	**63**	

Type of poppet - see section 6

Pressure controls
31, 34, 35, 36, 37

Directional, flow and check controls
32, 33 normally closed, without damping nose
42, 43 normally closed, with damping nose

Check controls
52 normally closed
62, 63, 96 normally open

Spring cracking pressure - see section 7

Series number

Seals material:
- = NBR
PE = FKM
BT = NBR low temp.

2 GENERAL CHARACTERISTICS

Assembly position	Any position
Subplate surface finishing to ISO 4401	Acceptable roughness index, Ra ≤0,8 recommended Ra 0,4 - flatness ratio 0,01/100
MTTFd valves according to EN ISO 13849	150 years, see technical table P007
Ambient temperature range	**Standard** = -30°C ÷ +70°C **/PE** option = -20°C ÷ +70°C **/BT** option = -40°C ÷ +70°C
Storage temperature range	**Standard** = -30°C ÷ +80°C **/PE** option = -20°C ÷ +80°C **/BT** option = -40°C ÷ +80°C
Compliance	RoHS Directive 2011/65/EU as last update by 2015/863/EU REACH Regulation (EC) n°1907/2006

3 SEALS AND HYDRAULIC FLUID - for other fluids not included in below table, consult our technical office

Seals, recommended fluid temperature	NBR seals (standard) = -20°C ÷ +80°C, with HFC hydraulic fluids = -20°C ÷ +50°C FKM seals (/PE option) = -20°C ÷ +80°C NBR low temp. seals (/BT option) = -40°C ÷ +60°C, with HFC hydraulic fluids = -40°C ÷ +50°C		
Recommended viscosity	20÷100 mm^2/s - max allowed range 15 ÷ 380 mm^2/s		
Max fluid contamination level	ISO4406 class 20/18/15 NAS1638 class 9, see also filter section at www.atos.com or KTF catalog		
Hydraulic fluid	**Suitable seals type**	**Classification**	**Ref. Standard**
Mineral oils	NBR, FKM, NBR low temp.	HL, HLP, HLPD, HVLP, HVLPD	DIN 51524
Flame resistant without water	FKM	HFDU, HFDR	ISO 12922
Flame resistant with water	NBR, NBR low temp.	HFC	

4 SC LI CARTRIDGE AREAS

Area ratio	**A**	**B** (% of A)	**Ap** (% of A)
1:1	100%	0	100%
1:1,1	100%	10%	110%
1:1,5	100%	50%	150%
1:1,6	100%	60%	160%

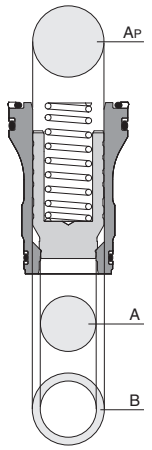

A = seat area
B = annular area
AP = piloting area

Pressure applied to areas A and B acts to open the poppet.
Pressure applied to area AP plus the spring force act to close the poppet

5 INSTALLATION - for cavity dimensions, see table P006

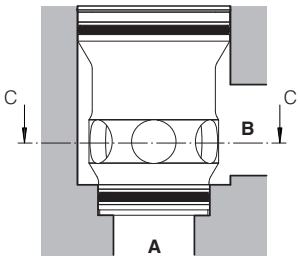

Correct cartridge orientation
(section C-C)

Mounting position with reduced power density
(section C-C)

6 TYPE OF POPPET FOR SC LI SLIP-IN CARTRIDGES

TYPE \ SIZE	SC LI-16	SC LIR-16	SC LI-25	SC LIR-25	SC LI-32	SC LIR-32	SC LI-40	SC LIR-40	SC LI-50	SC LIR-50	SC LI-63	SC LIR-63	SC LI-80	SC LIR-80	SC LI-100	SC LIR-100	Functional sketch (hydraulic symbol)	Typical section	Area ratio	Related functional cover (only for **SC LI**) see section 9, 10, 11, 12
Mass [Kg]	0.2		0.5		0.9		1.7		3		7		13		22		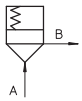			
31	●	-	●	-	●	-	●	-	●	-	●	-	●	-	-	-			1 : 1	LIMM, LIMHA, LIMHC, LIC, LICM
Qmax [l/min] Δp = 5 bar	180		370		630		1100		1900		3100		4900		-					
32	●	●	●	●	●	●	●	●	●	●	●	●	●	●	●	-		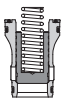	1 : 1.1	LIDA, LIDD, LIDB, LIDBH, LIDEW
Qmax [l/min] Dp = 5 bar	270		550		1000		1700		2500		4000		5500		9000					
33	●	●	●	●	●	●	●	●	●	●	●	●	●	●	●	●		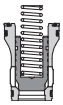	1 : 1.5	LIDA, LIDD, LIDB, LIDBH, LIDEW
Qmax [l/min] Δp = 5 bar	270		550		1000		1700		2500		4000		5500		9000					
34	●	-	○	-	○	-	-	-	-	-	-	-	-	-	-	-	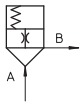		1 : 1	LIMM, LIMHA, LIMHC
Qmax [l/min] Δp = 5 bar	180																			
35	●	-	●	-	●	-	●	-	●	-	-	-	-	-	-	-	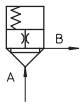		1:1.1	LIMM, LIMHA, LIMHC
Qmax [l/min] Δp = 5 bar	180		370		630		1100		1900											
36	●	-	●	-	●	-	●	-	●	-	●	-	●	-	-	-	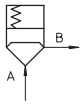		1:1	LIC, LICM
Qmax [l/min] Δp = 5 bar	180		370		630		1100		1900		3100		4900							
37	●	-	●	-	●	-	●	-	-	-	-	-	-	-	-	-		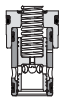	1:1	LIRA
Qmax [l/min] Δp = 5 bar	140		250		500		750													
42	●	●	●	●	●	●	●	●	●	●	●	●	●	●	-	-			1:1.1	LIDA, LIDD, LIDB, LIDBH, LIDEW
Qmax [l/min] Δp = 5 bar	240		500		800		1400		2200		3300		4000							
43	●	●	●	●	●	●	●	●	●	●	●	●	●	●	●	●		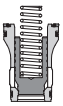	1:1.5	LIDA, LIDD, LIDB, LIDBH, LIDEW
Qmax [l/min] Δp = 5 bar	240		500		800		1400		2200		3300		4000		6300					
52	●	-	●	-	●	-	●	-	●	-	-	-	-	-	-	-	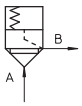		1:1.1	LIDA
Qmax [l/min] Δp = 5 bar	160		400		600		1200		1800											
62	●	-	●	-	●	-	●	-	●	-	-	-	-	-	-	-	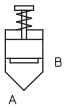	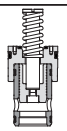	1:1.1	LIDO
Qmax [l/min] Δp = 5 bar	160		400		600		1200		1800											
63	●	-	●	-	●	-	●	-	●	-	-	-	-	-	-	-	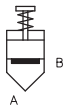	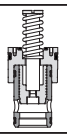	1 : 1.1	LIDO
Qmax [l/min] Δp = 5 bar	160		400		600		1200		1800											
69	●	-	●	-	●	-	●	-	●	-	-	-	-	-	-	-		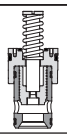	1 : 1.6	

● normally available from stock
○ on request
– not available

7 HYDRAULIC CHARACTERISTICS - based on mineral oil ISO VG 46 at 50 °C

7.1 Type of poppets for directional and check controls SC LI and SC LIR

Type of poppet		32				33				42				43			
Functional sketch (Hydraulic symbol)		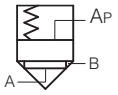				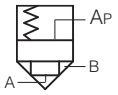				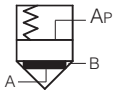				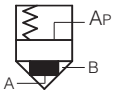			
Area ratio A:Ap		**1:1,1**				**1:1,5**				**1:1,1**				**1:1,5**			
Operating pressure		**420 bar max**															
Nominal flow at Δp 5 bar (l/min) see diagrams Q/Δp at section 8																	
Size **16**		270				270				240				240			
Size **25**		550				550				500				500			
Size **32**		1000				1000				800				800			
Size **40**		1700				1700				1400				1400			
Size **50**		2500				2500				2200				2200			
Size **63**		4000				4000				3300				3300			
Size **80**		5500				5500				4000				4000			
Size **100**		9000				9000				-				6300			
Cracking pressure (bar)																	
Spring (1)		**1**	**2**	**3**	**6**	**1**	**2**	**3**	**6**	**1**	**2**	**3**	**6**	**1**	**2**	**3**	**6**
Size **16**	A→B	0.3	1.5	3	5.3	0.6	1.6	2.9	5.1	0.3	1.7	3.3	6.1	0.7	1.9	3.3	5.7
	B→A	3.2	16	30.5	50.3	1.2	3.2	5.8	10	3.6	17.7	34.5	63.4	1.3	3.7	6.5	11.2
Size **25 (2)**	A→B	0.3	1.5	3	5	0.6	1.4	3	5	0.3	1.7	3.3	6.1	0.7	1.5	3.3	5.8
	B→A	3.1	15.1	30.5	50.3	1.2	2.8	5.9	9.9	3.5	17.1	33.3	61.4	1.3	3	6.5	11.3
Size **32 (3)**	A→B	0.3	1.5	3	5	0.6	1.6	3	5.4	0.3	1.7	3.7	6.3	0.7	1.8	3.4	6.3
	B→A	3.5	17	34.2	56.7	1.2	3.2	6	10.7	3.9	18.8	41.6	71.1	1.4	3.6	6.9	12.7
Size **40**	A→B	0.3	1.5	3	5	0.6	1.5	3	5.5	0.4	1.8	3.5	6.4	0.7	1.8	3.6	7.3
	B→A	2.9	14.7	29.4	48.3	1.2	3	6	11	3.5	17.2	34	62	1.3	3.6	7.2	14.6
Size **50**	A→B	0.3	1.5	3	4.3	0.6	1.6	3	4.8	0.4	1.7	3.4	5.2	0.7	1.9	3.4	5.7
	B→A	3.6	16.9	33.8	48.4	1.4	3.6	6.7	10.8	4.2	18.9	38.1	58.9	1.5	4.4	7.7	12.9
Size **63**	A→B	0.3	1.5	2.9	4.2	0.6	1.5	2.9	5.8	0.4	1.7	3.4	4.7	0.7	1.8	3.3	6.5
	B→A	3.1	15	29.2	42	1.3	3.3	6.4	12.5	3.6	16.6	33.8	47.2	1.5	4	7.2	14.1
Size **80**	A→B	0.3	1.5	3	4.6	0.6	1.5	3	5.3	0.3	1.7	3.3	4.9	0.7	1.8	3.3	5.9
	B→A	3	14.8	29.2	45.2	1.3	3.1	6.3	11.2	3.4	16.6	32.9	48.8	1.4	3.8	7	12.4
Size **100**	A→B	0.3	1.5	3		0.6	1.5	3.1	6					0.7	1.9	3.8	7.4
	B→A	3	15	30.5		1.2	3	6.3	12.2					1.5	3.9	7.8	14.9

(1) Spring type 1 is not available for SC-LIR size 16 to 40

(2) Cracking pressure for SC LIR-25 (A-B / B-A): SC LIR-25332 = 2.1 bar / 4.1 bar
SC LIR-25432 = 2.3 bar / 4.5 bar

(3) Cracking pressure for SC LIR-32 (A-B / B-A): SC LIR-32332 = 2.1 bar / 4.2 bar
SC LIR-32432 = 2.3 bar / 4.6 bar

7.2 Type of poppets for check controls SC LI

Type of poppet		52				62	63
Functional sketch (Hydraulic symbol)		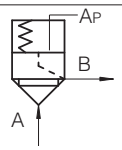				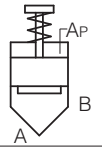	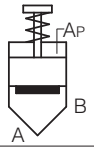
Area ratio A:Ap		**1:1,1**				**1:1,1**	**1:1,1**
Operating pressure		**420 bar max**					
Nominal flow at Δp 5 bar (l/min) see diagrams Q/Δp at section 8							
Size **16**		160				160	160
Size **25**		400				400	400
Size **32**		600				600	600
Size **40**		1200				1200	1200
Size **50**		1800				1800	1800
Cracking pressure (bar)							
Spring		**1**	**2**	**3**	**6**	**3**	**6**
Size **16**	A→B	0.3	1.5	3	6	Normally open	Normally open
Size **25**	A→B	0.3	1.5	3	6		
Size **32**	A→B	0.3	1.5	3	6		
Size **40**	A→B	0.3	1.5	3	6		
Size **50**	A→B	0.3	1.5	3	6		

7.3 Type of poppets for pressure controls SC LI

Type of poppet		31			34			35			36	37	
Functional sketch (Hydraulic symbol)		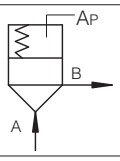			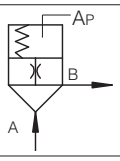			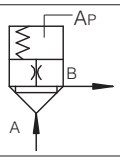			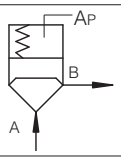	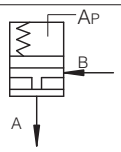	
Area ratio A:Ap		**1:1**			**1:1**			**1:1,1**			**1:1**	**1:1**	
Operating pressure		**420 bar max**											
Nominal flow at Δp 5 bar (l/min) see diagrams Q/Δp at section 8													
Size **16**		180			180			180			180	140	
Size **25**		370			-			370			370	250	
Size **32**		630			-			630			630	500	
Size **40**		1100			-			1100			1100	750	
Size **50**		1900			-			1900			1900	-	
Size **63**		3100			-			-			3100	-	
Size **80**		4900			-			-			4900	-	
Cracking pressure (bar)													
Spring		**2**	**3**	**6**	**2**	**3**	**6**	**1**	**2**	**3**	**6**	**6**	**4**	**7**
Size **16**	A→B	1.2	3	6	1.2	3	6	0.3	1.2	3	6	6	4	7
	B→A												4	7
Size **25**	A→B	1.2	3	6				0.3	1.2	3	6	6	4	7
	B→A												4	7
Size **32**	A→B	1.2	3	6				0.3	1.2	3	6	6	4	7
	B→A												4	7
Size **40**	A→B	1.2	3	6				0.3	1.2	3	6	6	4	7
	B→A												4	7
Size **50**	A→B	1.2	3	6				0.3	1.2	3	6	6		
	B→A													
Size **63**	A→B	1.2	3	6								6		
	B→A													
Size **80**	A→B	1.2	3	6								6		
	B→A													

7.4 Poppet area SC LI and SC LIR

Area (cm^2)	Poppet type	Size (1)							
		16	25	32	40	50	63	80	100
A	31, 34	2.32	4.68	7.55	11.95	18.10	33.18	47.78	69.40
	36	2.27	4.52	8.04	12.57	19.63	20.43	-	-
	37	2.54	4.91	8.04	12.57	-	-	-	-
	32, 35, 42, 52, 63	2.87	5.60	9.35	15.07	25.97	40.15	51.53	86.43
	33, 43	2.09	4.08	6.79	11.04	19.63	30.19	38.48	63.62
B	31, 34	0.22	0.23	0.49	0.62	1.54	3.13	2.48	9.14
	36	0	0	0	0	0	0	-	-
	37	0	0	0	0	-	-	-	-
	32, 35, 42, 52, 63	0.28	0.56	0.83	1.55	2.31	4.03	5.22	8.61
	33, 43	1.05	2.07	3.39	5.57	8.64	13.99	18.26	31.42
Ap	31, 34	2.54	4.91	8.04	12.57	19.63	36.32	50.27	78.54
	36	2.54	4.91	8.04	12.57	19.63	20.43	–	–
	37	2.54	4.91	8.04	12.57	-	-	-	-
	32, 35, 42, 52, 63	3.14	6.16	10.18	16.62	28.27	44.18	56.75	95.03
	33, 43	3.14	6.16	10.18	16.62	28.27	44.18	56.75	95.03

7.5 Poppet stroke and pilot volume SC LI and SC LIR

	Poppet type	Size (1)							
		16	25	32	40	50	63	80	100
Stroke (cm)	31, 34	0.5	0.71	1.11	1.31	1.52	1.85	2.19	3.00
	36	0.52	0.82	1.15	1.30	1.52	1.27	-	-
	37	0.60	0.67	0.92	1.05	-	-	-	-
	32, 35, 42, 52, 63	0.80	1.00	1.31	1.70	2.10	2.61	2.80	3.80
	33, 43	0.90	1.11	1.40	1.90	2.30	2.80	3.00	3.87
Pilot volume (cm^3)	31, 34	1.27	3.49	8.93	16.46	29.85	67.19	110.08	235.62
	36	1.32	4.03	9.25	16.34	29.85	25.94	-	-
	37	1.53	3.29	7.40	13.19	-	-	-	-
	32, 35, 42, 52, 63	2.51	6.16	13.28	28.25	59.38	115.89	159.89	361.13
	33, 43	2.83	6.83	14.25	31.49	65.03	123.70	170.24	367.78
Theoretical pilot flow **(2)** (l/min)	31, 34	7.63	20.91	53.56	98.77	179.07	403.12	660.49	1413.72
	36	7.94	24.15	55.49	98.02	179.07	155.66	-	-
	37	9.16	19.73	44.39	79.17	-	-	-	-
	32, 35, 42, 52, 63	15.08	36.95	79.70	169.51	356.26	690.51	953.32	2166.76
	33, 43	16.96	41.01	85.50	188.96	390.19	742.20	1021.41	2206.67

(1) See section 6 for the availability of different sizes for each poppet type
(2) Theoretical pilot flow with switching time = 10ms

8 FLOW /Δp DIAGRAMS based on mineral oil ISO VG 46 at 50 °C

8.1 Poppets type 32, 33, 42, 43 for directional, flow and check controls

size 16

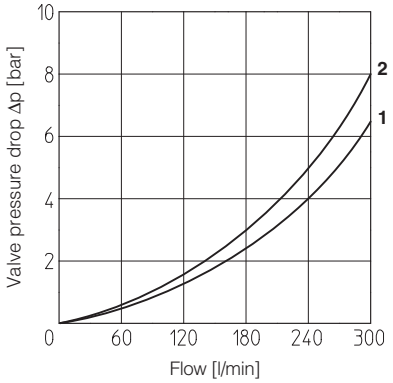

size 25

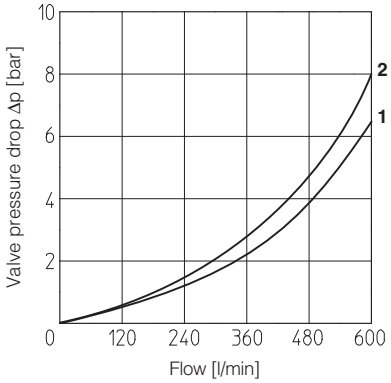

size 32

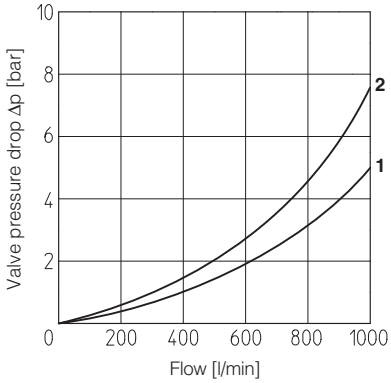

size 40

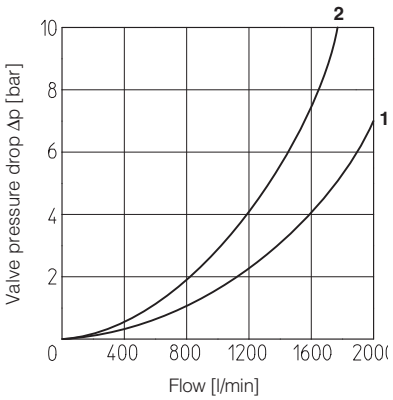

size 50

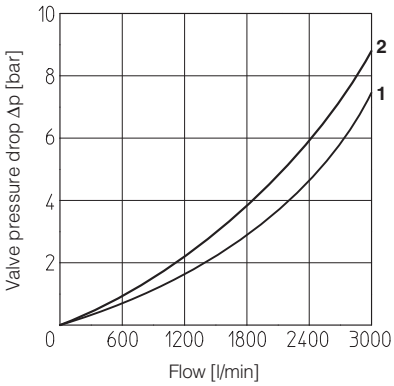

size 63

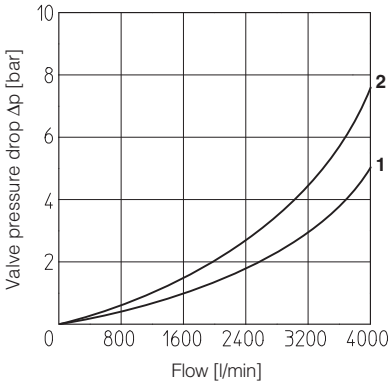

size 80

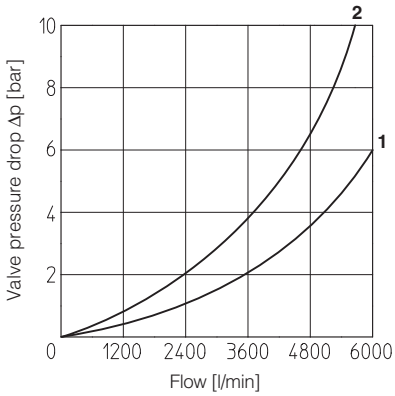

size 100

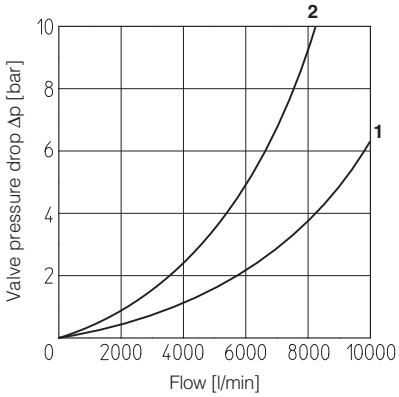

1 = poppet type 32 and 33
2 = poppet type 42 and 43

8.2 Poppets type 52, 62, 63 for check controls

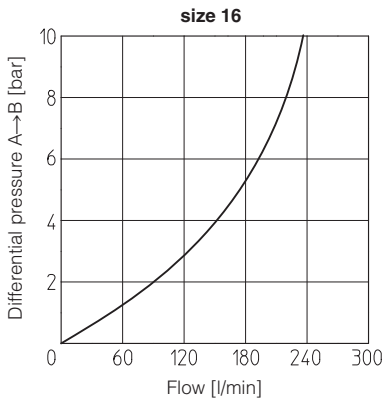

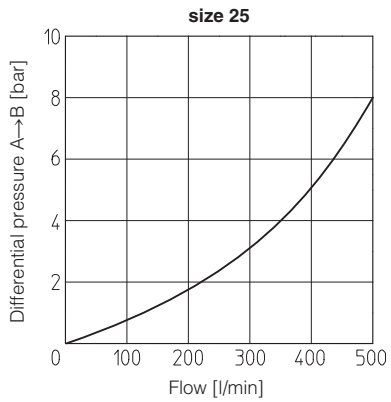

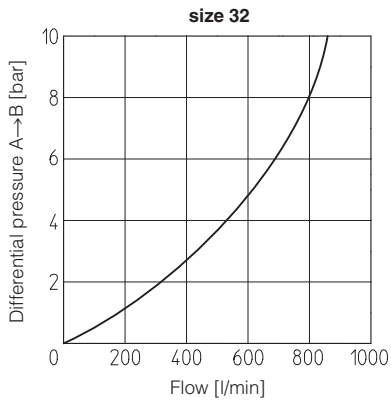

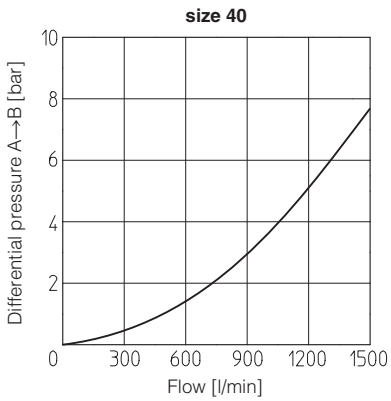

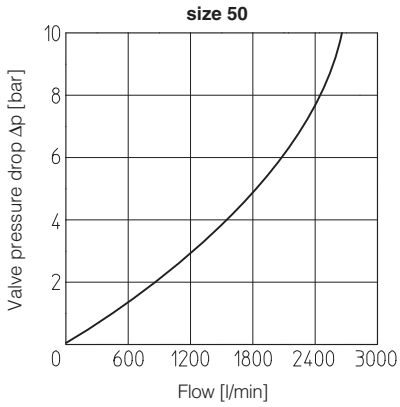

8.3 Poppets type 31, 34, 35, 36, 37 for pressure controls

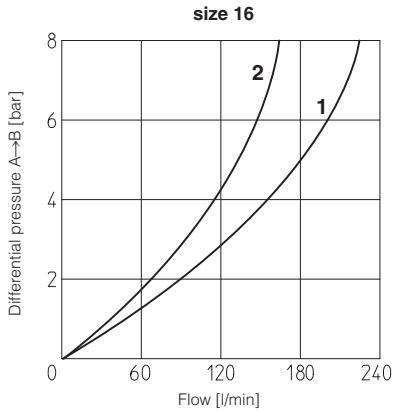

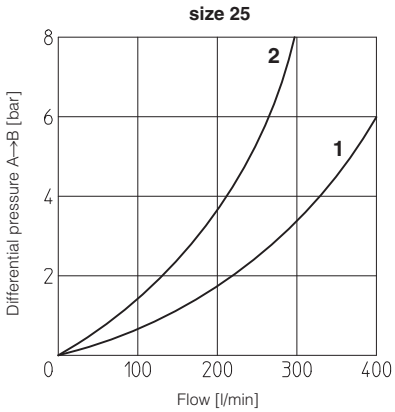

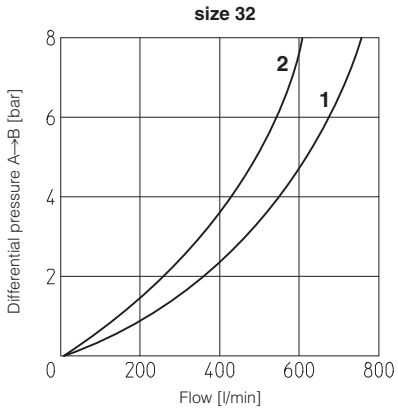

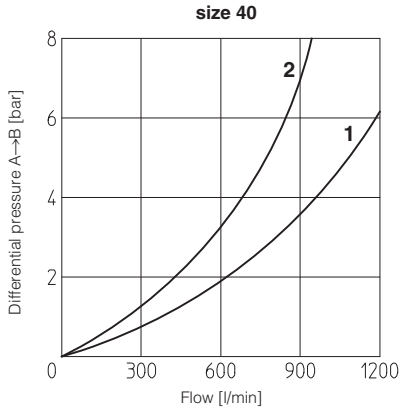

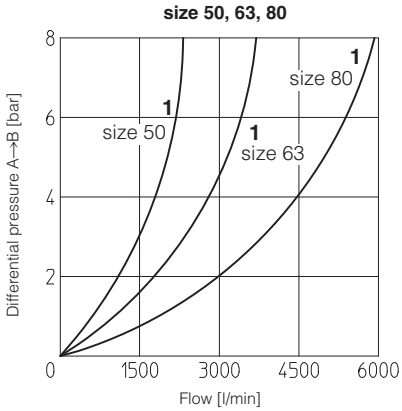

1 = poppet type 31, 34, 35, 36
2 = poppet type 37

Note:

poppet type 34 only for size 16
poppet type 37 for size 16 to 40

9 FUNCTIONALS COVERS - DIRECTIONAL CONTROL, see table H030

Function and type of control	Size	Hydraulic symbol	Functional cover size 16 ÷ 100	SC LI cartridges
Direct operated directional control valve with solenoid valve for pilot selection **LIDEW***	16 25 32 40 50 63 80 100	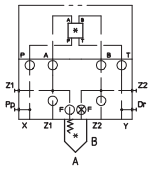	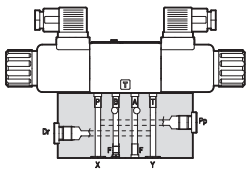	SC LI-**32* SC LI-**33* size 16 ... 100 SC LI-**42* size 16 ... 80 SC LI-**43* size 16 ... 100
Direct operated directional control valve with solenoid valve and shuttle valve for pilot selection **LIDBH1A** = open when solenoid is de-energized **LIDBH1C** = closed when solenoid is de-energized	16 25 32 40 50 63 80 100	**1A** 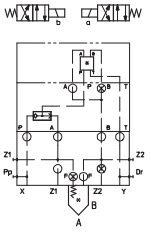 **1C**	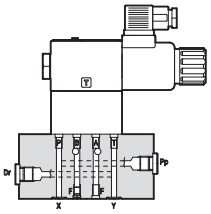	SC LI-**32* SC LI-**33* size 16 ... 100 SC LI-**42* size 16 ... 80 SC LI-**43* size 16 ... 100
Direct operated directional control valve with solenoid and shuttle valve for pilot selection **LIDBH2A** = when solenoid is de-energized only connections X→F **LIDBH2C** = when solenoid is de-energized only connections Z1→F	16 25 32 40 50 63 80 100	**2A** 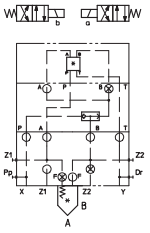 **2C**		SC LI-**32* SC LI-**33* size 16 ... 100 SC LI-**42* size 16 ... 80 SC LI-**43* size 16 ... 100

10 FUNCTIONALS COVERS - CHECK FUNCTION, see table H040

Function and type of control	Size	Hydraulic symbol	Functional cover size 16 ÷ 25	Functional cover size 32 ÷ 80	SC LI cartridges
Direct operated check valve normally closed **LIDA**	16 25 32 40 50 63 80 100	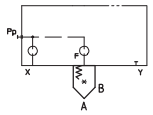	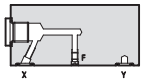	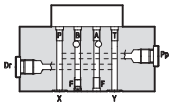	SC LI-**32* SC LI-**33* size 16 ... 100 SC LI-**42* size 16 ... 80 SC LI-**43* size 16 ... 100 SC LI-**52* size 16 ... 50
Direct operated check valve normally open **LIDO**	16 25 32 40 50	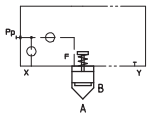	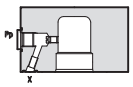		SC LI-**62* SC LI-**63* size 16... 50
Direct operated check valve with shuttle valve for pilot selection **LIDB**	16 25 32 40 50 63	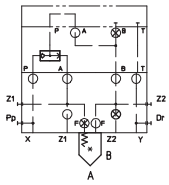	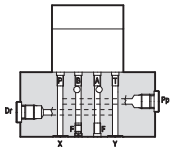		SC LI-**32* SC LI-**33* size 16 ... 63 SC LI-**42* SC LI-**43* size 16 ... 63
Direct operated check valve with hydraulically operated pilot check valve **LIDR**	16 25 32 40 50 63	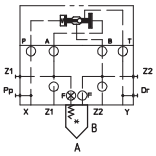	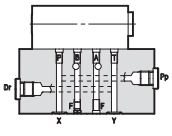		SC LI-**32* SC LI-**33* size 16 ... 63 SC LI-**42* SC LI-**43* size 16 ... 63

11 TYPICAL FUNCTIONS OF COVERS - PRESSURE CONTROL, see table H010

Function and type of control	Size	Hydraulic symbol	Functional cover size 16 ÷ 32	Functional cover size 40 ÷ 80	SC LI cartridges
Pressure relief control with manual setting **LIMM**	16 25 32 40 50 63 80	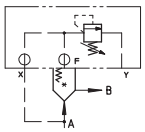	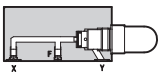	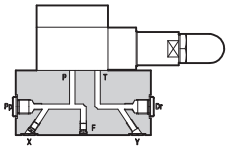	SC LI-**31* size 16... 80 SC LI-**34* size 16 SC LI-**35* size 16...50
Pressure relief control with solenoid valve for venting **LIMHA** = unloading when solenoid is de-energized **LIMHC** = unloading when solenoid is energized	16 25 32 40 50 63 80	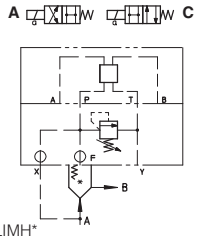 LIMH*	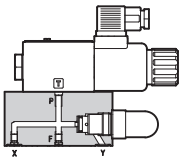	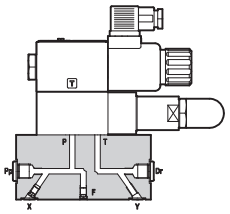	SC LI-**31* size 16...80 SC LI-**34* size16 SC LI-**35* size16...50
Pressure reducing control with manual setting. Open in resting position **LIRA**	16 25 32 40	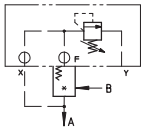	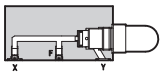	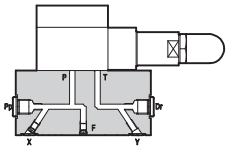	SC LI-**37* size 16...40
Function and type of control	Size	Hydraulic symbol	Functional cover size 16 ÷ 25	Functional cover size 32 ÷ 80	SC LI cartridges
Pressure compensator to be coupled with flow control valves **LIC**	16 25 32 40 50 63 80	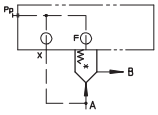	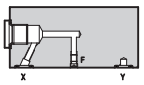	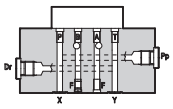	SC LI-**31* size 16...80 SC LI-**36* size 16...80
Pressure compensator with mechanical max pressure regulation to be coupled with flow control valves. **LICM**	16 25 32 40 50 63 80	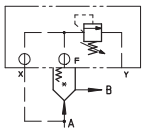	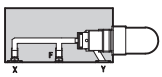	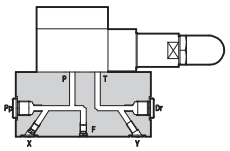	SC LI-**31* size 16...80 SC LI-**36* size 16...80

12 FUNCTIONAL COVERS - FLOW CONTROL, see table H020

Function and type of control	Size	Hydraulic symbol	Functional cover size 16 ÷ 63	SC LI cartridges
Flow control with stroke limiter **LIDD**	16 25 32 40 50 63	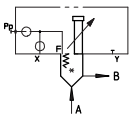	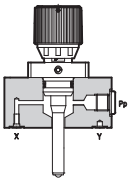	SC LI-**32* SC LI-**33* size 16...63 SC LI-**42* SC LI-**43* size 16...63

13 RELATED DOCUMENTATION

H010	ISO cartridge valves type LIM*, LIRA, LIC*
H020	ISO cartridge valves type LIDD
H030	ISO cartridge valves type LIDEW* and LIDBH*
H040	ISO cartridge valves type LID*

ISO cartridge valves type LIDEW* and LIDBH*

directional control, high flow, **Pmax 420 bar**

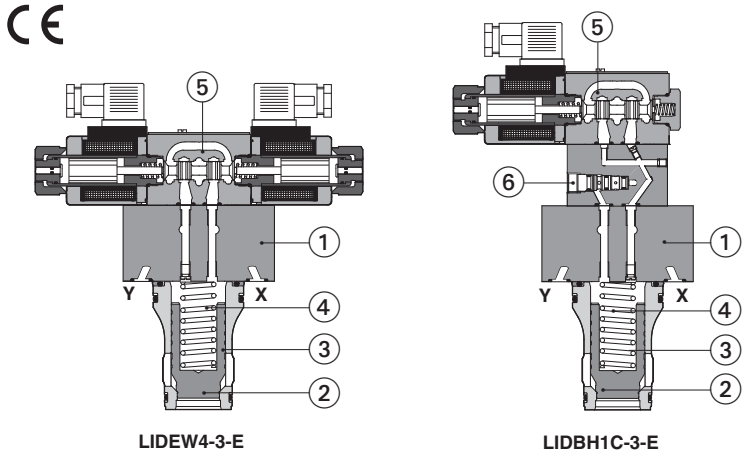

LIDEW4-3-E **LIDBH1C-3-E**

① Functional cover
② Poppet
③ Sleeve
④ Spring
⑤ Pilot solenoid valve
⑥ Shuttle valve

Directional control valves in ISO cartridge design, used to intercept or to permit the flow passage according to the selected pilot control. They are made by a functional cover ① and a 2-way **SC LI** slip-in cartridge.

LIDEW: functional cover with or without pilot solenoid valve for cartridge operation, available in different configurations depending to the function to be performed.

LIDBH as LIDEW plus shuttle valve for pilot pressure selection.

The SC LI slip-in cartridge is available with different poppet shape to optimize the control, see section 6.

It is made by a poppet ② sliding into a sleeve ③ and kept in normally closed position by the spring ④ available with different cracking pressure values.

Size: **16** to **100** ISO 7368

Max flow up to **9000** l/min at Δp = 5 bar

Max pressure up to **420 bar**

1 MODEL CODE OF FUNCTIONAL COVERS - for model code of slip-in cartridge, see section 5

LI	D	EW	1	-	3	/	*	-	E	X	24DC	**	/	*	*

LI: Cover according to ISO 7368

D = directional function

EW = with or without pilot solenoid valve
BH = as EW plus shuttle valve for pilot selection

Cover configuration see section 2
LIDEW: **-** (without pilot valve)
LIDEW: **1**, **2**, **4**, **5**, **6**
LIDBH: **1A**, **1C**, **2A**, **2C**

Size:
1 = 16 **2** = 25 **3** = 32 **4** = 40
5 = 50 **6** = 63 **8** = 80 **10** = 100

Options, see section 3

Pilot solenoid valve (1)
for size 1 to 6: **E** = DHE, **Pmax 350 bar**
EP = DHEP, **Pmax 420 bar**
L = DHL, **Pmax 350 bar**
for size 8 and 10: **E** = DKE, **Pmax 350 bar**
EP = DKEP, **Pmax 420 bar**

X = without connector
See section 9 for available connectors, to be ordered separately
00-AC = AC solenoid valve without coils
00-DC = DC solenoid valve without coils

Voltage code see section 8

Series number

Seals material:
- = NBR
PE = FKM
BT = HNBR **(2)**

Optional different setting of calibrated plugs in the pilot channels, see sections 3, 4

(1) for solenoid valve's characteristics, see following technical tables:

DHE tech. table E015
DHEP tech. table E030
DHL tech. table E018
DKE tech. table E025
DKEP tech. table E035

(2) Not available for LIDEW***-L**

2 HYDRAULIC SYMBOLS (cover configuration)

LIDEW

LIDEW-*

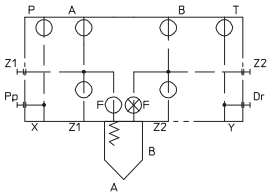

LIDEW1-*

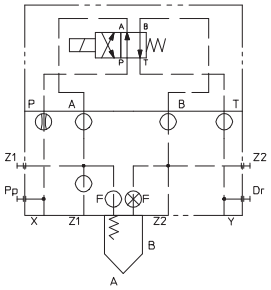

LIDEW2-*

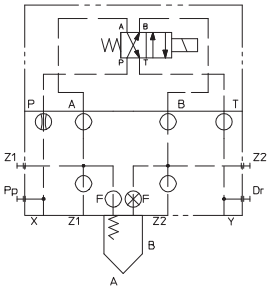

LIDEW4-*

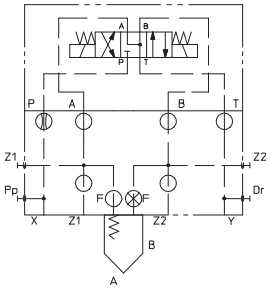

LIDEW5-*

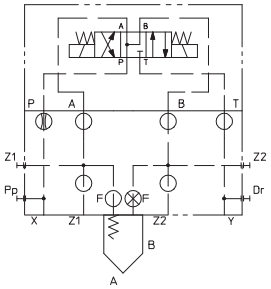

LIDEW6-*

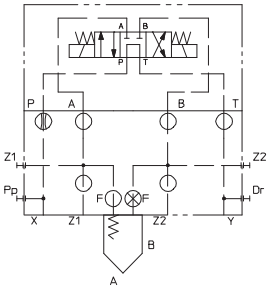

LIDBH

LIDBH1A-*

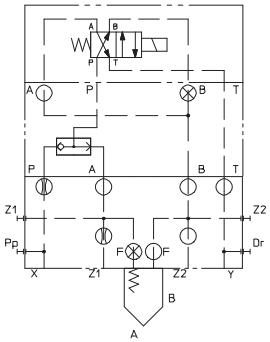

LIDBH1C-*

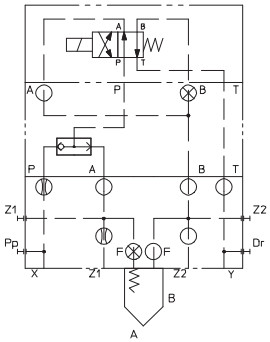

LIDBH2A-*

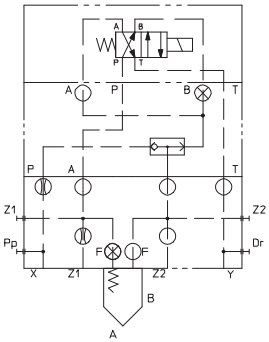

LIDBH2C-*

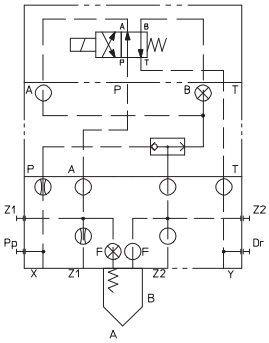

3 OPTIONS

For LIDEW*, LIDBH* covers (sizes 40…100):

/E = with external attachments Pp and underneath port X supplied plugged;

For all the models:

/B = cartridge piloted via port “B” of solenoid pilot valve;

/F = prearranged for coupling to an intermediate element with poppet position detector for safety function. See tab. EY120.

/WP = prolonged manual override protected by rubber cap for solenoid pilot valve. See table K150.

******* = Calibrated plugs different from standard ones reported in section 7. The restrictors configuration (if different from the standard) must be indicated at the end of the model code:

LIDEW2	-	1	/*	-	EX	24DC	**

P
Channel where the orifice has to be provided: **P** = channel X, port P **Z1** = channel Z1 **F** = channel F **Z2** = channel Z2

06
Size of the throttling hole in tenths of millimeters: **05** = 0,5 mm **10** = 1 mm **17** = 1,7 mm **06** = 0,6 mm **12** = 1,2 mm **20** = 2 mm **08** = 0,8 mm **15** = 1,5 mm

4 STANDARD ORIFICES CONFIGURATION

Port \ Cover	LIDEW*-1 LIDBH*-1	LIDEW*-2 LIDBH*-2	LIDEW*-3 LIDBH*-3	LIDEW*-4 LIDBH*-4	LIDEW*-5 LIDBH*-5	LIDEW*-6 LIDBH*-6	LIDEW*-8 LIDBH*-8	LIDEW*-10 LIDBH*-10
Z1 (only for LIDBH*-*)	M4 12A	M4 12A	M6 15A	M6 17A	M6 20A	M6 20A	M8 20A	M8 20A
P	M6 12A	M6 12A	M6 15A	M6 17A	M6 20A	M6 20A	M8 20A	M8 25A

M4 ÷ M8 = screw size; **12A ÷ 20A** = calibrated orifices diameter in tenths of mm; **A** = short calibrated hole

5 MODEL CODE OF SLIP-IN CARTRIDGES

SC LI - **16** | **43** | **1** | **40** / *****

Cartridge according to ISO 7368

Size, the same of relevant cover:

16 25 32 40 50 63 80 100

Type of poppet

32, 33 (size 16 to 100) = without damping nose
42 (size 16 to 80) = as 32 but with damping nose
43 (size 16 to 100) = as 33 but with damping nose

Spring cracking pressure, see section 6:

1 2 3 6

Series number

Seals material:
- = NBR
PE = FKM
BT = HNBR

6 TYPE OF POPPET

Type of poppet	32	33	42	43
Functional sketch (Hydraulic symbol)	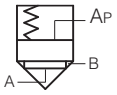	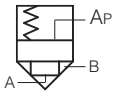	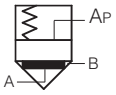	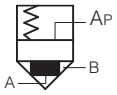
Typical section	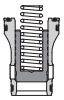	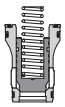		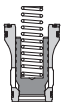
Area ratio A:Ap	**1:1,1**	**1:1,5**	**1:1,1**	**1:1,5**
Operating pressure	**420 bar max**			
Nominal flow at Δp 5 bar (l/min) see diagrams Q/Δp at section 9				
Size **16**	270	270	240	240
Size **25**	550	550	500	500
Size **32**	1000	1000	800	800
Size **40**	1700	1700	1400	1400
Size **50**	2500	2500	2200	2200
Size **63**	4000	4000	3300	3300
Size **80**	5500	5500	4000	4000
Size **100**	9000	9000	-	6300

Cracking pressure (bar)

Spring		**1**	**2**	**3**	**6**	**1**	**2**	**3**	**6**	**1**	**2**	**3**	**6**	**1**	**2**	**3**	**6**
Size **16**	A→B	0.3	1.5	3	5.3	0.6	1.6	2.9	5.1	0.3	1.7	3.3	6.1	0.7	1.9	3.3	5.7
	B→A	3.2	16	30.5	50.3	1.2	3.2	5.8	10	3.6	17.7	34.5	63.4	1.3	3.7	6.5	11.2
Size **25**	A→B	0.3	1.5	3	5	0.6	1.4	3	5	0.3	1.7	3.3	6.1	0.7	1.5	3.3	5.8
	B→A	3.1	15.1	30.5	50.3	1.2	2.8	5.9	9.9	3.5	17.1	33.3	61.4	1.3	3	6.5	11.3
Size **32**	A→B	0.3	1.5	3	5	0.6	1.6	3	5.4	0.3	1.7	3.7	6.3	0.7	1.8	3.4	6.3
	B→A	3.5	17	34.2	56.7	1.2	3.2	6	10.7	3.9	18.8	41.6	71.1	1.4	3.6	6.9	12.7
Size **40**	A→B	0.3	1.5	3	5	0.6	1.5	3	5.5	0.4	1.8	3.5	6.4	0.7	1.8	3.6	7.3
	B→A	2.9	14.7	29.4	48.3	1.2	3	6	11	3.5	17.2	34	62	1.3	3.6	7.2	14.6
Size **50**	A→B	0.3	1.5	3	4.3	0.6	1.6	3	4.8	0.4	1.7	3.4	5.2	0.7	1.9	3.4	5.7
	B→A	3.6	16.9	33.8	48.4	1.4	3.6	6.7	10.8	4.2	18.9	38.1	58.9	1.5	4.4	7.7	12.9
Size **63**	A→B	0.3	1.5	2.9	4.2	0.6	1.5	2.9	5.8	0.4	1.7	3.4	4.7	0.7	1.8	3.3	6.5
	B→A	3.1	15	29.2	42	1.3	3.3	6.4	12.5	3.6	16.6	33.8	47.2	1.5	4	7.2	14.1
Size **80**	A→B	0.3	1.5	3	4.6	0.6	1.5	3	5.3	0.3	1.7	3.3	4.9	0.7	1.8	3.3	5.9
	B→A	3	14.8	29.2	45.2	1.3	3.1	6.3	11.2	3.4	16.6	32.9	48.8	1.4	3.8	7	12.4
Size **100**	A→B	0.3	1.5	3		0.6	1.5	3.1	6					0.7	1.9	3.8	7.4
	B→A	3	15	30.5		1.2	3	6.3	12.2					1.5	3.9	7.8	14.9

7 MAIN CHARACTERISTIC, SEALS AND HYDRAULIC FLUIDS - for other fluids not included in below table, consult our technical office

Assembly position / location	Any position		
Subplate surface finishing	Roughness index Ra 0,4 - flatness ratio 0,01/100 (ISO 1101)		
MTTFd values according to EN ISO 13849	150 years, for further details see technical table P007		
Compliance	CE to Low Voltage Directive 2014/35/EU RoHS Directive 2011/65/EU as last update by 2015/863/EU REACH Regulation (EC) n°1907/2006		
Ambient temperature	**Standard** execution = -30°C ÷ +70°C **/PE** option = -20°C ÷ +70°C **/BT** option = -40°C ÷ +70°C		
Seals, recommended fluid temperature	NBR seals (standard) = -20°C ÷ +80°C, with HFC hydraulic fluids = -20°C ÷ +50°C FKM seals (/PE option)= -20°C ÷ +80°C HNBR seals (/BT option)= -40°C ÷ +60°C, with HFC hydraulic fluids = -40°C ÷ +50°C		
Recommended viscosity	15÷100 mm²/s - max allowed range 2.8 ÷ 500 mm²/s		
Max fluid contamination level	ISO4406 class 20/18/15 NAS1638 class 9, see also filter section at www.atos.com or KTF catalog		
Hydraulic fluid	**Suitable seals type**	**Classification**	**Ref. Standard**
Mineral oils	NBR, FKM, HNBR	HL, HLP, HLPD, HVLP, HVLPD	DIN 51524
Flame resistant without water	FKM	HFDU, HFDR	ISO 12922
Flame resistant with water	NBR, HNBR	HFC	
Flow direction	From A→B or B→A		
Functional cover operating pressure — Pilot valve **E, L**	Ports A, B, X, Z_1, Z_2: **350** bar	Port Y: **210** bar for DC version; **160** bar for AC version	
Functional cover operating pressure — Pilot valve **EP**	Ports A, B, X, Z_1, Z_2: **420** bar	Port Y: **210** bar for DC version; **160** bar for AC version	

7.1 Coils characteristics

Insulation class	(180°C) for DC coils **F** (155°C) for AC coils Due to the occurring surface temperatures of the solenoid coils, the European standards EN ISO 13732-1 and EN ISO 4413 must be taken into account
Protection degree to DIN EN 60529	**IP 65** (with connectors 666, 667, 669 correctly assembled)
Relative duty factor	100%
Supply voltage and frequency	See electric feature 8
Supply voltage tolerance	± 10%
Certification	**cURus** North American Standard (not for **-L**)

8 COIL VOLTAGE

External supply nominal voltage ± 10%	**Voltage code** (1)	-LX (DHL) Power consumption (3)	-EX, -EPX (DHE*) Power consumption (3)	-EPX (DKE*) Power consumption (3)	-LX (DHL) Code of spare coil pilot valve	-EX, -EPX (DHE*) Code of spare coil pilot valve	-EX, -EPX (DKE*) Code of spare coil pilot valve
12 DC	**12 DC**	29W	30W	36W	COL-12DC	COE-12DC	CAE-12DC
24 DC	**24 DC**				COL-24DC	COE-24DC	CAE-24DC
110 DC	**110 DC**				COL-110DC	COE-110DC	CAE-110DC
220 DC	**220 DC**				COL-220DC	COE-220DC	CAE-220DC
110/50 AC (2)	**110/50/60 AC**	58VA (4)	58VA (4)	-	COL-110/50/60AC	COE-110/50/60AC	-
110/50/60 AC		-	-	100VA (4)	-	-	CAE-110/50/60AC
115/60 AC (2)	**115/60 AC**	58VA (4)	80VA (4)	130VA (4)	COL-115/60AC	COE-115/60AC	CAE-115/60AC
230/50 AC (2)	**230/50/60 AC**	58VA (4)	58VA (4)	-	COL-230/50/60AC	COE-230/50/60AC	-
230/50/60 AC		-	-	100VA (4)	-	-	CAE-230/50/60AC
230/60 AC	**230/60 AC**	58VA (4)	80VA (4)	130VA (4)	COL-230/60AC	COE-230/60AC	CAE-230/60AC

(1) For other supply voltages available on request see technical tables E015, E018, E025.
(2) Coil can be supplied also with 60 Hz of voltage frequency: in this case the performances are reduced by 10 ÷ 15% and the power consumption is 55 VA (DHL), 52 VA (DHE*), 90 VA (DKE*)
(3) Average values based on tests performed at nominal hydraulic condition and ambient/coil temperature of 20°C.
(4) When solenoid is energized, the inrush current is approx 3 times the holding current.

9 **Q/Δp DIAGRAMS** based on mineral oil ISO VG 46 at 50 °C

size 16

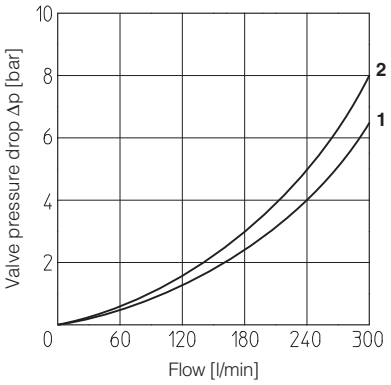

size 25

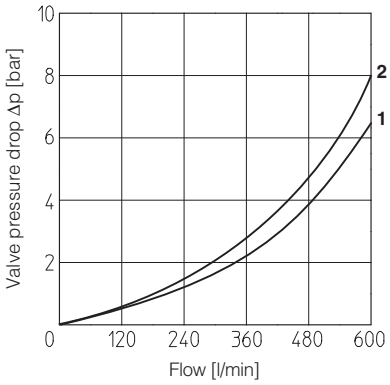

size 32

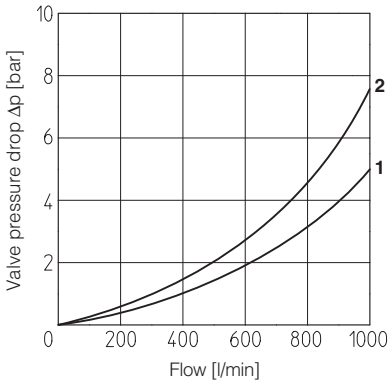

size 40

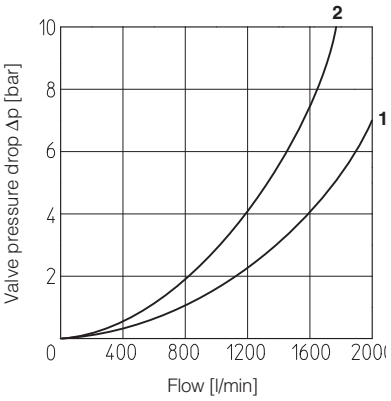

size 50

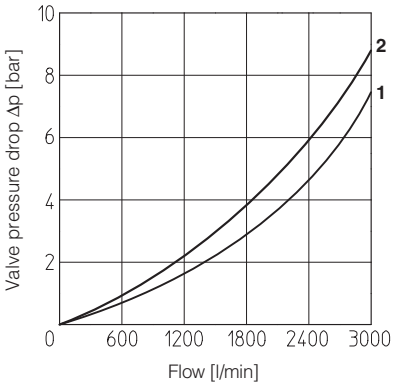

size 63

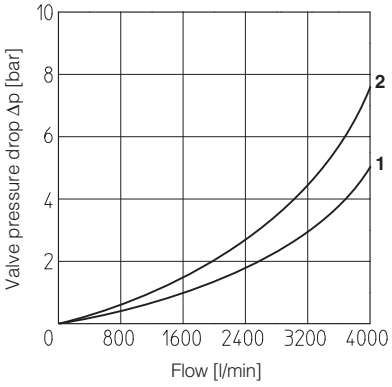

size 80

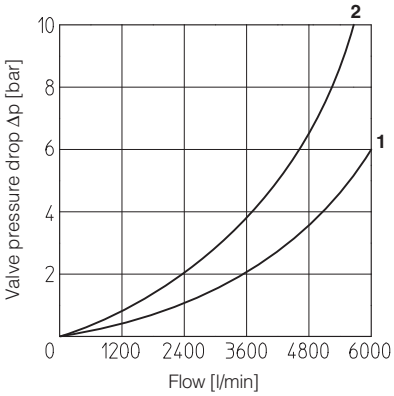

size 100

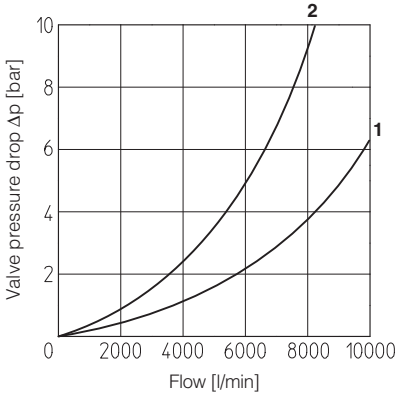

1 = poppet type 32 and 33
2 = poppet type 42 and 43

10 COVER DIMENSIONS [mm] - for mounting interface and cavity dimensions see tech. table P006

Size 16 ÷ 63

Drawing of size 50
dotted line: example of double solenoid version

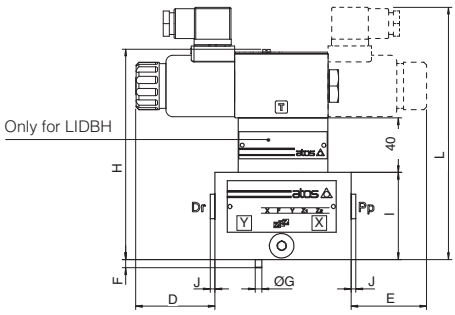

Size 80 and 100

dotted line: example of AC solenoid version

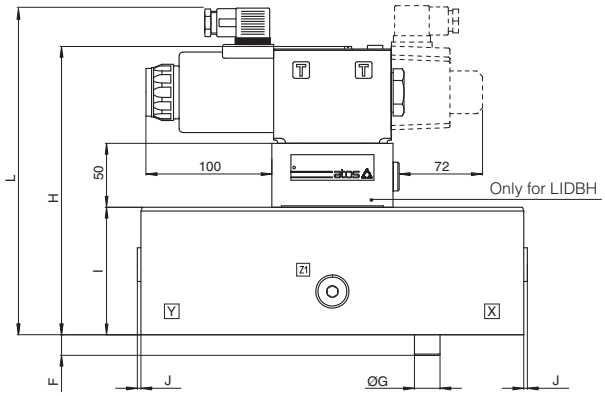

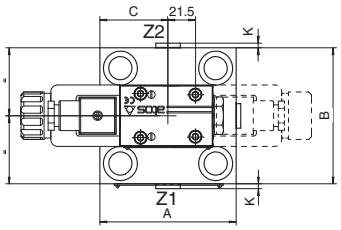

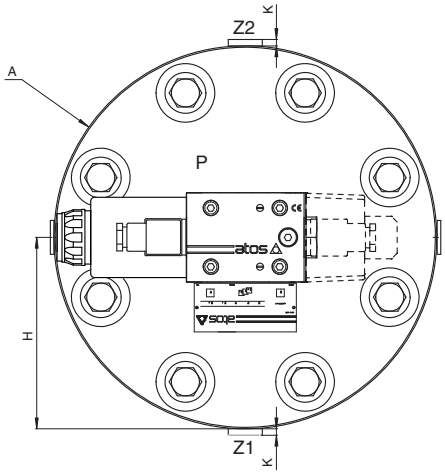

Notes referred to the below table:

(1) LIDEW1*, LIDBH*C: solenoid at side of port Y of cover;
LIDEW2*, LIDBH*A: solenoid at side of port X of cover;

Size (1)	A	B	C	D (max)	E (max)	F	G	H max **LIDEW**	H max **LIDBH**	I	J	K	L (max)	Ports Pp-Dr	Ports Z1-Z2	Seals	Fastening bolts DIN 912 class 12.9	Tightening torque [Nm]	Mass [Kg]
16	70	65	29	104	70.5	4	3	90,5	130,5	40	-	-	125	-	-	4 OR-108	N°4 M8x45	35	2.6÷3
25	85	85	42.5	104	69.5	6	5	90,5	130,5	40	-	-	125	-	-	4 OR-108	N°4 M12x45	125	3÷3.4
32	100	100	50	156	42.5	6	5	100,5	140,5	50	-	-	135	-	-	4 OR-2043	N°4 M16x55	300	3.5÷4
40	125	125	62.5	166	49.5	6	5	110,5	150,5	60	3.5	-	145	G1/4”	-	4 OR-3043	N°4 M20x70	600	6.4÷7
50	140	140	70	140	42	4	6	120,5	160,5	70	3.5	3.5	155	G1/4”	G1/4”	4 OR-3043	N°4 M20x80	600	9.5÷10
63	180	180	90	151	22	4	6	130,5	170,5	80	3.5	3.5	165	G3/8”	G3/8”	4 OR-3050	N°4 M30x90	2100	17÷17.7
80	Ø250	-	125	-	-	6	8	152,5	202,5	80	3.5	3.5	187	G3/8”	G3/8”	4 OR-3075	N°8 M24x90	1000	27÷27.7
100	Ø300	-	150	-	-	8	10	182,5	222,5	100	3.5	3.5	217	G1/2”	G1/2”	4 OR-3093	N°8 M30x120	2100	53÷54

On-off active cartridges type LIDAS, 2-way

directional control

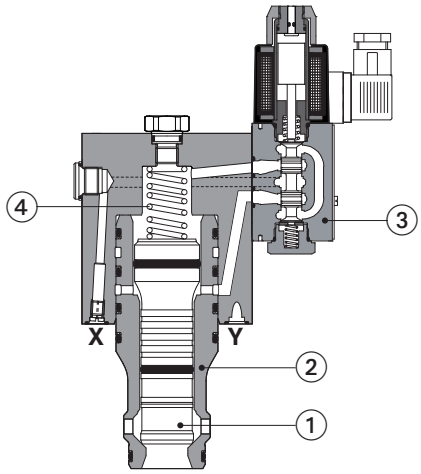

① = main poppet
② = cartridge sleeve
③ = solenoid pilot valve (LIDASH-*)
④ = spring

LIDASH-3231-EX

LIDAS are 2-way ISO cartridge valves with active pilot control, normally used to shut-off the hydraulic line.
The particular poppet sealing grants leak-free characteristics.

The poppet ① is hydraulically operated in both directions, ensuring in this way higher reliability and faster response time respect to the conventional spring operated cartridge valves.
The spring ④ ensures the valve closing in absence of pressure in the system.
They are available in different executions:
LIDAS: without pilot solenoid valve
LIDASH: with on-off pilot solenoid valve

Sizes:**16 to 50** ISO 7368
Max flow up to **2100 l/min** with Δp = 5 bar
Max pressure: up to **420 bar**

1 MODEL CODE

LIDAS	H	-	40	43	3	-	E	X	24DC	**	*

On-off active cartridges, according to ISO 7368

Pilot solenoid valve
- = without pilot solenoid valve
H = with pilot solenoid valve

Size: **16 25 32 40 50**

Poppet type: see section 2
31, **33**
43 (with damping nose)

3 = spring cracking pressure 3 bar

Only for LIDASH - Pilot solenoid valve:
E = DHE, **Pmax 350 bar**
EP = DHEP, **Pmax 420 bar**
L = DHL, **Pmax 350 bar**

Only for LIDASH
X = without connector
See section 4 for available connectors, to be ordered separately
-00-AC = AC solenoid valve without coils
-00-DC = DC solenoid valve without coils

Only for LIDASH
Voltage code, see section 6

Series number

Seals material:
- = NBR
PE = FKM
BT = HNBR **(1)**

Note: for certified safety version conforming to 2006/42/EC, with inductive position switch (option /FV) see table EY120
(1) Not available for LIMH***-L**

2 HYDRAULIC CHARACTERISTICS (based on mineral oil ISO VG 46 at 50 °C)

Hydraulic symbols

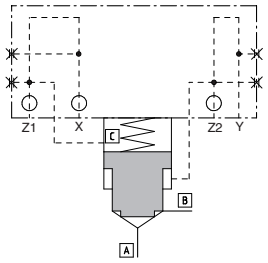

LIDAS

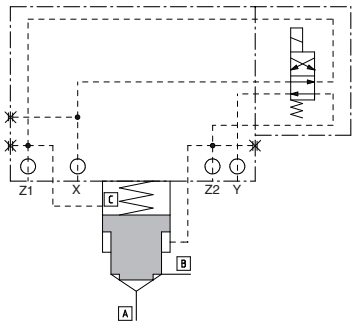

LIDASH

Cartridge areas

AA = main flow (side A)
AB = main flow (side B)
AAP = piloting area (close)
ABP = piloting area (open)

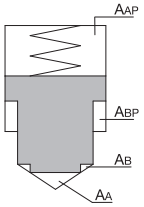

Thanks to the areas ratio AAP/(AA+AB), the valve closing is always ensured with a piloting pressure (X port) equal to the line pressure (A or B line).

3 MAIN CHARACTERISTICS, SEALS AND HYDRAULIC FLUIDS

Assembly position / location		Any position
Subplate surface finishing		Roughness index Ra 0,4 - flatness ratio 0,01/100 (ISO 1101)
MTTFd valves according to EN ISO 13849		LIDAS = 150 years LIDASH = 75 years
Compliance		CE to Low Voltage Directive 2014/35/EU RoHS Directive 2011/65/EU as last update by 2015/863/EU REACH Regulation (EC) n°1907/2006
Flow direction		B → A (preferred) or A → B
Piloting	**LIDAS**	Pressure to **X** = **close** Pressure to **Y** = **open**
	LIDASH	De-energized = **close** Energized = **open**
Operating pressure LIDAS		Ports A, B, X, Z_1, Z_2, Y: **420** bar
LIDASH	Pilot valve **E, L**	Ports A, B, X, Z_1, Z_2: **350** bar Port Y: **210** bar for DC version; **160** bar for AC version
	Pilot valve **EP**	Ports A, B, X, Z_1, Z_2: **420** bar Port Y: **210** bar for DC version; **160** bar for AC version

Size		**16**		**25**		**32**		**40**		**50**	
Maximum flow at Δp = 5 bar [l/min]	Poppet **31**	240		450		700		1400		2100	
	Poppet **33**	220		400		600		1300		2000	
	Poppet **43**	200		360		550		1100		1800	
Poppet characteristics	Poppet type	**31**	**33, 43**	**31**	**33, 43**	**31**	**33, 43**	**31**	**33, 43**	**31**	**33, 43**
A_A [cm²]		2,27	1,43	4,91	3,46	8,04	5,30	12,56	8,04	19,63	13,85
A_B (% of A_A)		0	58,6	0	41,7	0	51,5	0	56,3	0	41,7
A_{BP} (% of A_A)		67,5	107,0	63,8	90,5	56,3	85,2	56,3	87,9	69	97,8
A_{AP} (% of A_A)		167,5	265,6	163,8	232,2	156,3	236,7	156,3	244,1	169	239,2
A_A / (A_A + A_B) poppet ratio		1 for poppet **31**				0,6 for poppet **33, 43**					
A_{AP} / (A_A + A_B) piloting ratio		1,6 for poppet **31**				1,6 for poppet **33, 43**					

3.1 Coils characteristics (only for LIDASH)

Insulation class	**H** (180°C) for DC coils **F** (155°C) for AC coils Due to the occurring surface temperatures of the solenoid coils, the European standards EN ISO 13732-1 and EN ISO 4413 must be taken into account
Protection degree to DIN EN 60529	**IP 65** (with connectors 666, 667, 669 correctly assembled)
Relative duty factor	100%
Supply voltage and frequency	See electric feature 6
Supply voltage tolerance	± 10%
Certification	**cURus** North American Standard (not for **-L**)

4 SEALS AND HYDRAULIC FLUID - for other fluids not included in below table, consult our technical office

Seals, recommended fluid temperature	NBR seals (standard) = -20°C ÷ +80°C, with HFC hydraulic fluids = -20°C ÷ +50°C FKM seals (/PE option) = -20°C ÷ +80°C HNBR seals (/BT option) = -40°C ÷ +60°C, with HFC hydraulic fluids = -40°C ÷ +50°C		
Recommended viscosity	15÷100 mm²/s - max allowed range 2,8 ÷ 500 mm²/s		
Max fluid contamination level	ISO4406 class 20/18/15 NAS1638 class 9, see also filter section at www.atos.com or KTF catalog		
Hydraulic fluid	**Suitable seals type**	**Classification**	**Ref. Standard**
Mineral oils	NBR, FKM, HNBR	HL, HLP, HLPD, HVLP, HVLPD	DIN 51524
Flame resistant without water	FKM	HFDU, HFDR	ISO 12922
Flame resistant with water	NBR, HNBR	HFC	

5 ELECTRIC CONNECTORS ACCORDING TO DIN 43650 - the connectors must be ordered separately

Code of connector	Function
666	Connector IP-65, suitable for direct connection to electric supply source
667	As 666 connector IP-65 but with built-in signal led, suitable for direct connection to electric supply source.
669	With built-in rectifier bridge for supplying DC coils by alternating current (AC 110V and 230V - Imax 1A).

For other available connectors, see tab. K800

6 ELECTRIC FEATURES

Solenoid valve type	External supply nominal voltage ± 10% (1)		**Voltage code**	Type of connector	Power consumption (3)	Code of spare coil DHE, DHEP	Code of spare coil DHL
DHE DHEP DHL	DC	12 DC 24 DC 110 DC 220 DC	**12 DC** **24 DC** **110 DC** **220 DC**	666 or 667	29 W (DHL) 30 W (DHE, DHEP)	COE-12DC COE-24DC COE-110DC COE-220DC	COL-12DC COL-24DC COL-110DC COL-220DC
	AC	110/50 AC (2) 115/60 AC 120/60 AC 230/50 AC (2) 230/60 AC	**110/50/60 AC** **115/60 AC** **120/60 AC** **230/50/60 AC** **230/60 AC**	666 or 667	58 VA (4)	COE-110/50/60AC COE-115/60AC COE-230/50/60AC COE-230/60AC	COL-110/50/60AC COL-115/60AC COL-230/50/60AC COL-230/60AC

(1) For other supply voltages available on request see technical tables E015, E030, E018.
(2) Coil can be supplied also with 60 Hz of voltage frequency: in this case the performances are reduced by 10÷15% and the power consumption is 55 VA for DHL and 52VA for DHE and DHEP
(3) Average values based on tests performed at nominal hydraulic condition and ambient/coil temperature of 20°C.
(4) When solenoid is energized, the inrush current is approx 3 times the holding current. Inrush current values correspond to a power consumption of about 150 VA.

7 Q/Δp DIAGRAMS based on mineral oil ISO VG 46 at 50 °C

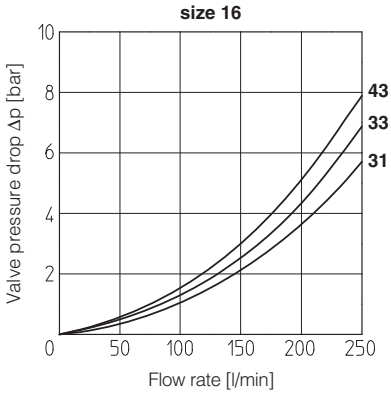

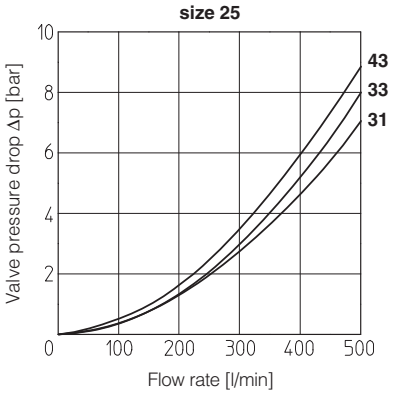

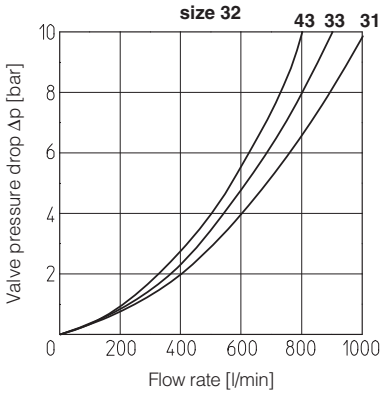

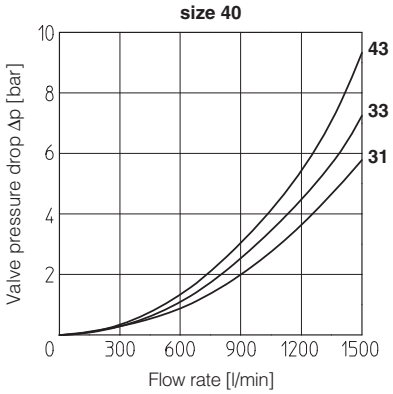

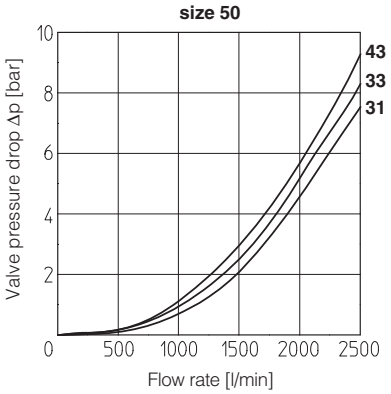

31 = poppet type 31
33 = poppet type 33
43 = poppet type 43

8 INSTALLATION DIMENSIONS [mm]

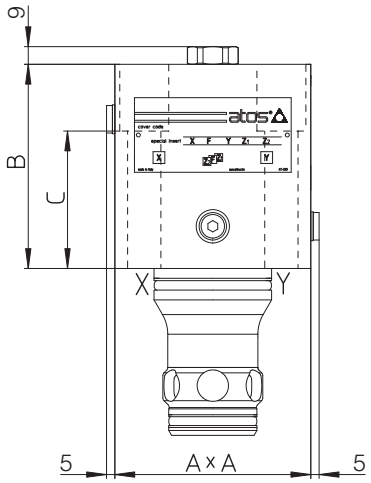

LIDAS						
Size	A	B	C	Fastening bolts class 12.9	connection port X, Y, Z1, Z2	Weight (Kg)
16	65	85	64	N°4 M8x80 35 Nm	G1/8”	2,8
25	85	102	75	N°4 M12x95 125 Nm	G1/8”	5,7
32	100	104	70	N°4 M16x90 300 Nm	G3/8”	7,3
40	125	111	39	N°4 M20x70 600 Nm	G3/8”	14,5
50	140	135	49	N°4 M20x80 600 Nm	G3/8”	19,5

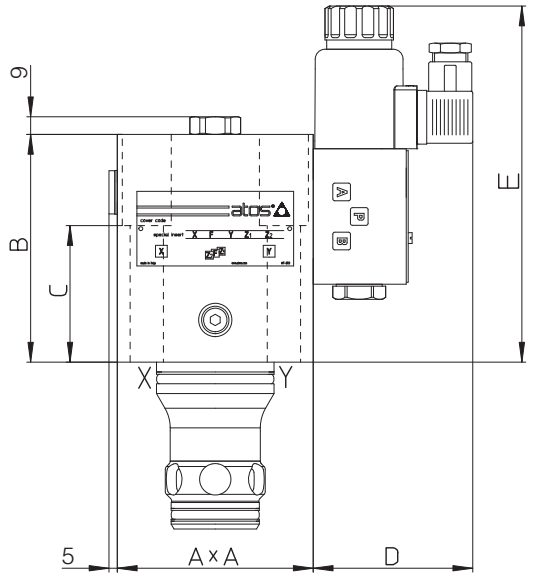

LIDASH									
Size	A	B	C	D max	E max	Fastening bolts class 12.9	connection port X	connection port Z1, Z2	Weight (Kg)
16	72x65	95	64	86	167	N°4 M8x80 35 Nm	G1/8”	G1/8”	4,4
25	85	115	77	86	181	N°4 M12x95 125 Nm	G1/8”	G1/8”	7,3
32	100	116	70	86	192	N°4 M16x90 300 Nm	G3/8”	G1/8”	8,9
40	125	125	39	86	196	N°4 M20x70 600 Nm	G3/8”	G1/8”	15,6
50	140	135	49	86	202	N°4 M20x80 600 Nm	G3/8”	G1/8”	20,6

Note: for mounting interface and cavity dimensions, see tech. table P006

ISO cartridge valves type LIM*, LIRA, LIC*

Pressure controls: relief, reducing, compensator - **Pmax 420 bar**

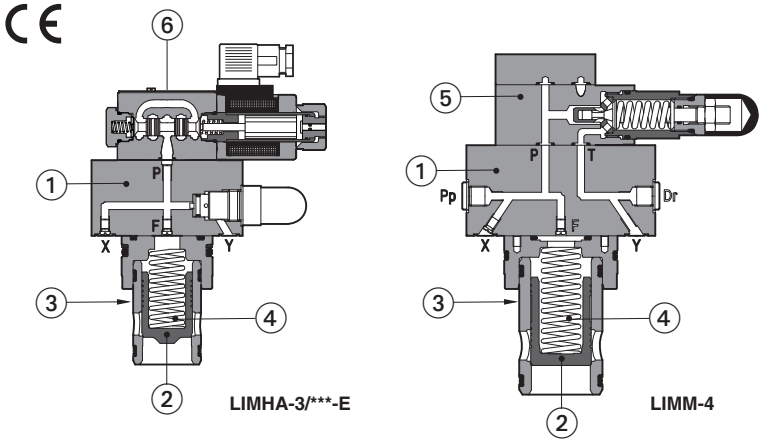

① Functional cover
② Poppet
③ Sleeve
④ Spring
⑤ Pressure relief pilot valve
⑥ Solenoid pilot valve

Pressure control valves in ISO cartridge design specific for relief, reducing or compensator functions

They are made by a functional cover ① and a 2-way **SC LI** slip-in cartridge.

Depending to the type of control, the cover is equipped with a pilot relief valve ⑤ for the max pressure regulation and a solenoid valve ⑥ for venting.

The SC LI slip-in cartridge is available with different poppet shape to optimize the pressure control, see section 4

It is made by a poppet ② sliding into a sleeve ③ and kept in normally closed position by the spring ④ available with different cracking pressure values.

Size: **16 to 80** ISO 7368
Max flow up to **4900 l/min** at Δp = 5 bar
Max pressure: up to **420 bar**

1 **MODEL CODE OF FUNCTIONAL COVERS** - for model code of slip-in cartridge, see section 5

LI	MHA	-	1	/	210	/	V	-	E	X	24DC	**	/	*	F**

LI: Cover according to ISO 7368

MHA:

Function:
MM = pressure relief control with manual setting;
MHA = pressure relief control with solenoid valve for venting. Unloading when solenoid is deenergized;
MHC = pressure relief control with solenoid valve for venting. Unloading when solenoid is energized;
RA = pressure reducing control with manual setting. Open in resting position;
C = pressure compensator to be coupled with flow control valves;
CM = pressure compensator with mechanical max pressure regulation to be coupled with flow control valves.

1:

Size: **1** = 16; **2** = 25; **3** = 32; **4** = 40; **5** = 50; **6** = 63; **8** = 80
LIRA is available only in size 16, 25, 32, 40

210:

Pressure range:
50 = 6 ÷ 50 bar;
100 = 8 ÷ 100 bar; **350** = 15 ÷ 350 bar;
210 = 10 ÷ 210 bar; **420** = 25 ÷ 420 bar **(1)**

V:

Options: see section 3

E:

Pilot solenoid valve only for LIMHA and LIMHC:
E = DHE, **Pmax 350 bar**
EP = DHEP, **Pmax 420 bar (1)**
L = DHL, **Pmax 350 bar**

X:

Only for LIMHA and LIMHC
X = without connector
00-AC = AC solenoid valve without coils
00-DC = DC solenoid valve without coils
See tech. table K800 for available connectors, to be ordered separately

24DC:

Voltage code only for LIMHA and LIMHC, see section 9

******:

Series number

*****:

Seals material:
- = NBR
PE = FKM
BT = HNBR **(2)**

F**:

Optional different setting of calibrated plugs in the pilot channels, see section 3, 4

(1) Pressure range 420 bar not available for LIMH***-E** and LIMH***-L**; LIMH*-**EP** is available only for pressure range 420 bar
(2) Not available for LIMH***-L**

2 HYDRAULIC SYMBOLS

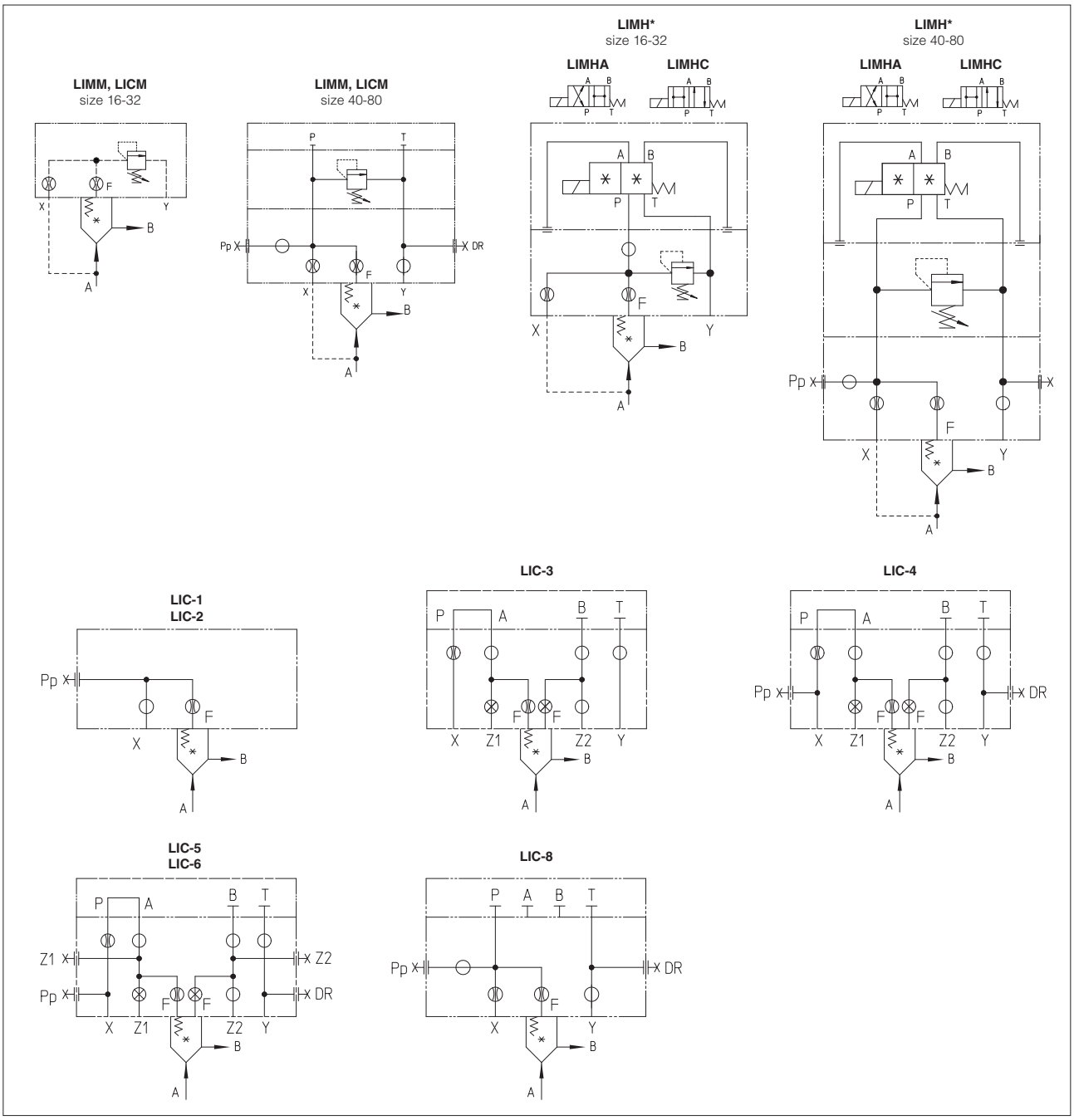

3 OPTIONS

Only for LIMM (size 16...32):

/P = predisposed for ISO 4401 size 06 mounting surface

Handwheel for pressure control, only for LIMM, LIMH*, LIRA, LICM (see tech. table K150):

/V = regulating handwheel (available for all the sizes)
/VF = regulating knob (available only for sizes 40…80)
/VS = manual override with safety locking (available only for sizes 40…80)
/WP = prolonged manual override protected by rubber cap for pilot solenoid valve

For all the models:

******* = calibrated plugs different from standard one. The restrictors configuration (if different from the standard) must be indicated at the end of the model code:

LIMHA	-	1	/	210	-	EX	24DC	**

F
Channel where the orifice has to be provided: **X** = channel X **F** = channel F

06
Size of the throttling hole in tenths of millimeters: **05** = 0,5 mm **10** = 1 mm **06** = 0,6 mm **12** = 1,2 mm **08** = 0,8 mm **15** = 1,5 mm **000** = without restrictors

4 STANDARD ORIFICES CONFIGURATION

Port \ Cover	LIM*-1	LIRA-1	LICM-1	LIC-1	LIM*-2	LIRA-2	LICM-2	LIC-2	LIM*-3	LIRA-3	LICM-3	LIC-3	LIM*-4	LIRA-4	LICM-4	LIC-4	LIM*-5	LICM-5	LIC-5	LIM*-6	LICM-6	LIC-6	LIM*-8	LICM-8	LIC-8
X	M4 10A	M4 08A	M4 08A	M4 -	M4 10A	M4 08A	M4 08A	M4 -	M6 10A	M6 08A	M6 12A	M6 10A	M6 10A	M6 12A	M6 10A	M6 10A	M6 10A	M6 10A	M6 10A	M6 10A	M6 10A	M6 10A	M8 10A	M8 10A	M8 10A
F	M4 12F	M4 12A	M4 05F	M4 05F	M4 12F	M4 12A	M4 05F	M4 05F	M6 12F	M6 12A	M6 12F	M6 05F	M6 12F	M6 08A	M6 12F	M6 12F	M6 12F	M6 12F	M6 12F	M6 12F	M6 12F	M6 12F	M8 12F	M8 12F	M8 12F

M4 ÷ M8 = screw size; **10A ÷ 12F** = calibrated orifice diameter in tenths of mm; **A** = short calibrated hole, **F** = long calibrated hole
- = without orifice;

5 MODEL CODE OF SLIP-IN CARTRIDGES

SC LI - **16** **31** **2** ****** **/***

Cartridge according to ISO 7368

Size, the same of relevant cover:
16 = 16; **32** = 32; **50** = 50; **80** = 80
25 = 25; **40** = 40; **63** = 63;

Type of poppet
31 = (sizes 16…80) = for LIMM, LIMH*, LIC, LICM
34 = (size 16) = for LIMM, LIMH*
35 = (sizes 16…50) = for LIMM, LIMH*
36 = (sizes 16…80) = for LIC, LICM
37 = (sizes 16…40) = for LIRA

Series number

Seals material:
- = NBR
PE = FKM
BT = HNBR

Spring cracking pressure, see section 6:
1 = 0,3 bar for poppet 35;
2 = 1,2 bar for poppet 31, 34, 35;
3 = 3 bar for poppet 31, 34, 35;
4 = 4 bar for poppet 37;
6 = 6 bar for poppet 31, 34, 35, 36;
7 = 7 bar for poppet 37;

6 TYPE OF POPPET

Type of poppet		**31**			**34**			**35**			**36**		**37**	
Functional sketch (Hydraulic symbol)		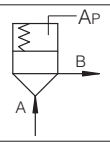			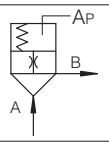			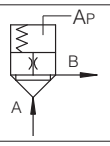			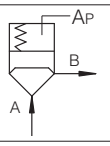		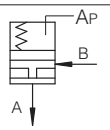	
Typical section		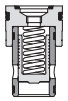			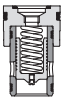			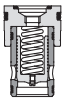			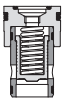		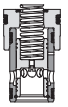	
Area ratio A:Ap		**1:1**			**1:1**			**1:1,1**			**1:1**		**1:1**	
Operating pressure		**420 bar max**												
Nominal flow at Δp 5 bar (l/min) see diagrams Q/Δp at section 8														
Size **16**		180			180			180			180		140	
Size **25**		370			-			370			370		250	
Size **32**		630			-			630			630		500	
Size **40**		1100			-			1100			1100		750	
Size **50**		1900			-			1900			1900		-	
Size **63**		3100			-			-			3100		-	
Size **80**		4900			-			-			4900		-	
Cracking pressure (bar)														
Spring		**2**	**3**	**6**	**2**	**3**	**6**	**1**	**2**	**3**	**6**	**6**	**4**	**7**
Size **16**	A→B	1.2	3	6	1.2	3	6	0.3	1.2	3	6	6	4	7
	B→A												4	7
Size **25**	A→B	1.2	3	6				0.3	1.2	3	6	6	4	7
	B→A												4	7
Size **32**	A→B	1.2	3	6				0.3	1.2	3	6	6	4	7
	B→A												4	7
Size **40**	A→B	1.2	3	6				0.3	1.2	3	6	6	4	7
	B→A												4	7
Size **50**	A→B	1.2	3	6				0.3	1.2	3	6	6		
	B→A													
Size **63**	A→B	1.2	3	6								6		
	B→A													
Size **80**	A→B	1.2	3	6								6		
	B→A													

7 MAIN CHARACTERISTICS SEALS AND HYDRAULIC FLUIDS

Assembly position / location	Any position		
Subplate surface finishing	Roughness index Ra 0,4 - flatness ratio 0,01/100 (ISO 1101)		
MTTFd values according to EN ISO 13849	150 years, for further details see technical table P007		
Ambient temperature	**Standard** execution = -30°C ÷ +70°C **/PE** option = -20°C ÷ +70°C **/BT** option = -40°C ÷ +70°C		
Compliance	CE to Low Voltage Directive 2014/35/EU RoHS Directive 2011/65/EU as last update by 2015/863/EU REACH Regulation (EC) n°1907/2006		
Seals, recommended fluid temperature	NBR seals (standard) = -20°C ÷ +80°C, with HFC hydraulic fluids = -20°C ÷ +50°C FKM seals (/PE option) = -20°C ÷ +80°C HNBR seals (/BT option) = -40°C ÷ +60°C, with HFC hydraulic fluids = -40°C ÷ +50°C		
Recommended viscosity	15÷100 mm^2/s - max allowed range 2.8 ÷ 500 mm^2/s		
Fluid contamination class	ISO 4406 class 21/19/16 NAS 1638 class 10, in line filters of 25 μm (β25 ≥75 recommended)		
Hydraulic fluid	**Suitable seals type**	**Classification**	**Ref. Standard**
Mineral oils	NBR, FKM, HNBR	HL, HLP, HLPD, HVLP, HVLPD	DIN 51524
Flame resistant without water	FKM	HFDU, HFDR	ISO 12922
Flame resistant with water	NBR, HNBR	HFC	
Flow direction	As shown in the symbols of table 2		
Functional cover operating pressure — all models except **LIMH***	Ports A, B, X: **420** bar;		
LIMH*-E, LIMH*-L	Ports A, B, X: **350** bar; Port T **210** bar for DC version; **160** bar for AC version		
LIMH*-EP	Ports A, B, X: **420** bar; Port T **210** bar for DC version; **160** bar for AC version		

7.1 Coils characteristics

Insulation class	**H** (180°C) for DC coils **F** (155°C) for AC coils Due to the occurring surface temperatures of the solenoid coils, the European standards EN ISO 13732-1 and EN ISO 4413 must be taken into account
Protection degree to DIN EN 60529	**IP 65** (with connectors 666, 667, 669 correctly assembled)
Relative duty factor	100%
Supply voltage and frequency	See electric feature 9
Supply voltage tolerance	± 10%
Coil certification	**cURus** North American Standard (not for **-L**)

8 FLOW /Δp DIAGRAMS based on mineral oil ISO VG 46 at 50 °C

size 16

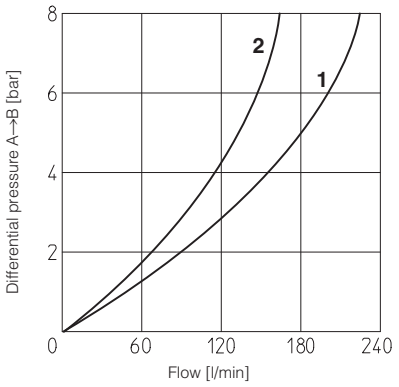

size 25

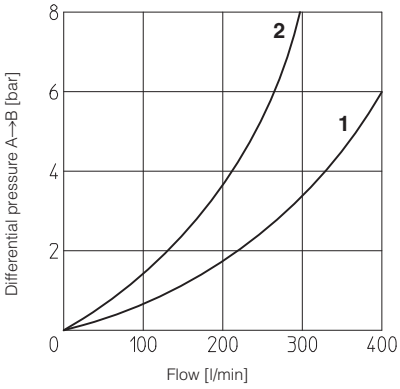

size 32

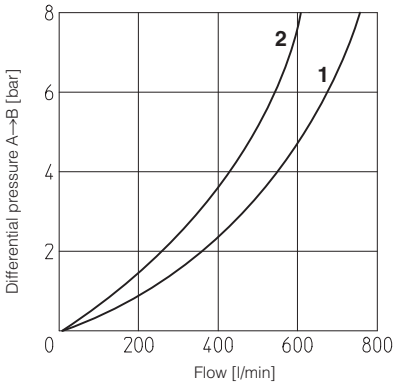

size 40

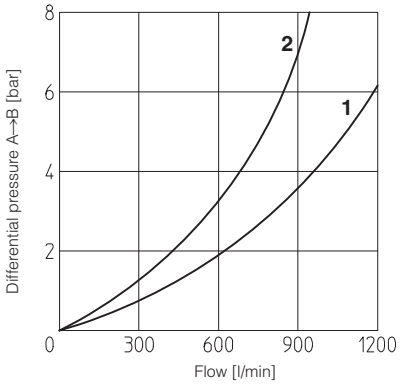

size 50, 63, 80

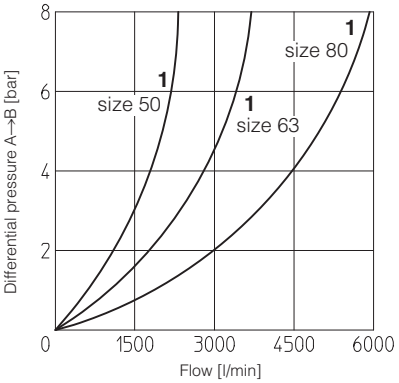

1 = poppet type 31, 34, 35, 36
2 = poppet type 37

Note:

poppet type 34 only for size 16
poppet type 37 for size 16 to 40

9 ELECTRIC FEATURES

Solenoid valve type	External supply nominal voltage ± 10% (1)		**Voltage code**	Type of connector	Power consumption (3)	Code of spare coil DHE, DHEP	Code of spare coil DHL
DHE DHEP DHL	DC	12 DC 24 DC 110 DC 220 DC	**12 DC** **24 DC** **110 DC** **220 DC**	666 or 667	29 W (DHL) 30 W (DHE, DHEP)	COE-12DC COE-24DC COE-110DC COE-220DC	COL-12DC COL-24DC COL-110DC COL-220DC
	AC	110/50 AC (2) 115/60 AC 120/60 AC 230/50 AC (2) 230/60 AC	**110/50/60 AC** **115/60 AC** **120/60 AC** **230/50/60 AC** **230/60 AC**	666 or 667	58 VA (4)	COE-110/50/60AC COE-115/60AC COE-230/50/60AC COE-230/60AC	COL-110/50/60AC COL-115/60AC COL-230/50/60AC COL-230/60AC

(1) For other supply voltages available on request see technical tables E015, E030, E018.
(2) Coil can be supplied also with 60 Hz of voltage frequency: in this case the performances are reduced by 10÷15% and the power consumption is 55 VA for DHL and 52VA for DHE and DHEP
(3) Average values based on tests performed at nominal hydraulic condition and ambient/coil temperature of 20°C.
(4) When solenoid is energized, the inrush current is approx 3 times the holding current. Inrush current values correspond to a power consumption of about 150 VA.

10 COVER DIMENSIONS [mm] - for mounting interface and cavity dimensions see tech. table P006

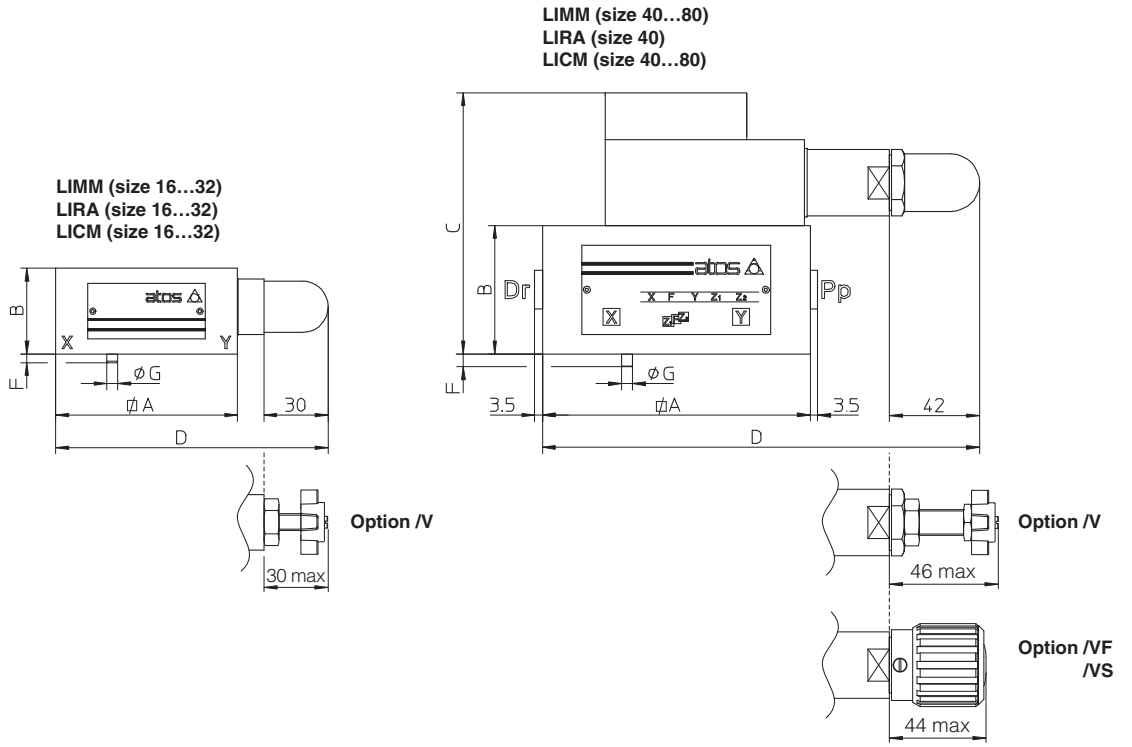

Covers	A	B	C	D	F	G	Port Pp-Dr	Seals	Fastening bolts DIN 912 class 12.9	Tightening torque [Nm]	Mass [Kg]
LIMM-1 **LIRA-1** **LICM-1**	65	40	-	107.5	4	3	-	2 OR-108	N°4 M8x45	35	1.7
LIMM-2 **LIRA-2** **LICM-2**	85	40	-	127.5	6	5	-	2 OR-108	N°4 M12x45	125	2.2
LIMM-3 **LIRA-3** **LICM-3**	100	50	-	155	6	5	-	2 OR-2043	N°4 M16x55	300	3.5
LIMM-4 **LIRA-4** **LICM-4**	125	60	122	205	6	5	G 1/4”	2 OR-3043	N°4 M20x70	600	8.9
LIMM-5 **LICM-5**	140	70	132	213	4	6	G 1/4”	2 OR-3043	N°4 M20x80	600	12.4
LIMM-6 **LICM-6**	180	80	142	233	4	6	G 3/8”	2 OR-3050	N°4 M30x90	2100	21.6
LIMM-8 **LICM-8**	Ø250	80	172	268	6	8	G 3/8”	2 OR-4075	N°4 M24x90	1000	30.5

LIC (size 16 ÷ 25)

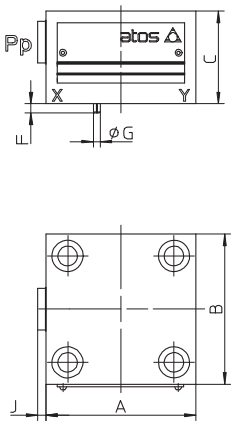

LIC (size 32…80)

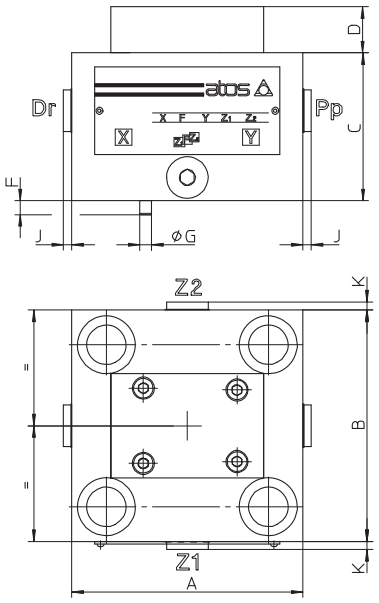

Covers	A	B	C	D	F	G	Port Pp-Dr	Port Z1-Z2	Seals	Fastening bolts DIN 912 class 12.9	Tightening torque [Nm]	Mass [Kg]
LIC-1	65	65	40	-	4	3	G 1/4”	-	2 OR-108	N°4 M8x45	35	1.4
LIC-2	85	85	40	-	6	5	G 1/4”	-	2 OR-108	N°4 M12x45	125	1.8
LIC-3	100	100	50	20	6	5	G 1/4”	-	4 OR-2043	N°4 M16x55	300	2.3
LIC-4	125	125	60	20	6	5	G 1/4”	-	4 OR-3043	N°4 M20x70	600	6.2
LIC-5	140	140	70	20	4	6	G 1/4”	G 1/4”	4 OR-3043	N°4 M20x80	600	9.3
LIC-6	180	180	80	20	4	6	G 3/8”	G 3/8”	4 OR-3050	N°4 M30x90	2100	17.1
LIC-8	Ø250	-	80	30	6	8	G 3/8”	-	2 OR-4075	N°4 M24x90	1000	27

LIMH* (size 16…32)

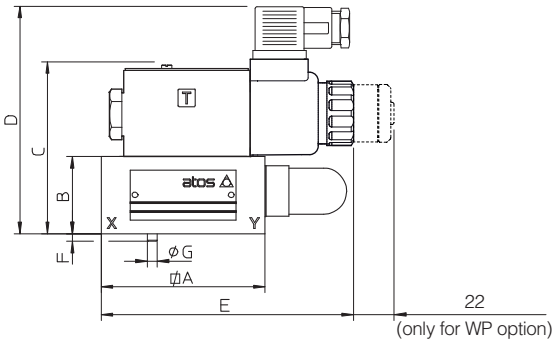

LIMH* (size 40…80)

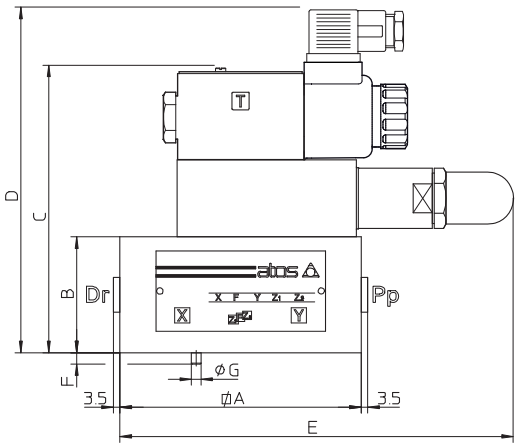

For options **/V**, **/VF**, **/VS**, refer to the LIMM drawing

Covers	A	B	C	D	E (max)	F	G	Port Pp-Dr	Seals	Fastening bolts DIN 912 class 12.9	Tightening torque [Nm]	Mass [Kg]
LIMH*-1	65 **(1)**	40	91	123.5	150	4	3	-	2 OR-108	N°4 M8x45	35	1.7
LIMH*-2	85	40	91	134.5	148	6	5	-	2 OR-108	N°4 M12x45	125	2.2
LIMH*-3	100	50	101	142.5	155	6	5	-	2 OR-2043	N°4 M16x55	300	3.5
LIMH*-4	125	60	151	195	205	6	5	G 1/4”	2 OR-3043	N°4 M20x70	600	8.9
LIMH*-5	140	70	161	202.5	213	4	6	G 1/4”	2 OR-3043	N°4 M20x80	600	12.4
LIMH*-6	180	80	171	222.5	233	4	6	G 3/8”	2 OR-3050	N°4 M30x90	2100	21.6
LIMH*-8	Ø250	80	201	257.5	268	6	8	G 3/8”	2 OR-4075	N°4 M24x90	1000	30.5

(1) Cover is not squared: 65x80

Overall dimensions refer to the pilot valves with connectors type 666

ISO cartridge valves type LIDD

Flow control

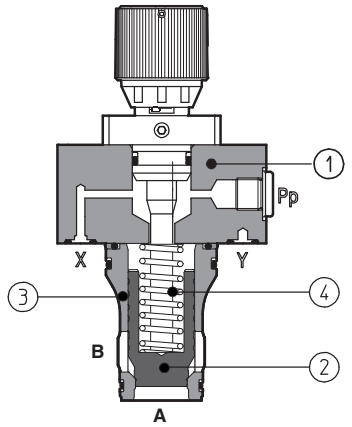

① Functional cover
② Poppet
③ Sleeve
④ Spring

LIDD-2

LIDD are flow control valves not compensated, in ISO cartridge design, made by a functional "cover" ① and a 2-way SC LI slip-in cartridge.

Covers are provided with regulating screw to adjust the cartridge opening.

The cartridge is made by poppet ② sliding into a sleeve ③. The position of the spool or poppet and then the controlled flow, is manually set on the regulating screw of the cover; the cracking pressure value depends on poppet spring.

Size: **16 to 63** ISO 7368
Max flow up to **4000 l/min** at Δp 5 bar
Max pressure: **LIDD 420 bar**

1 MODEL CODE FOR COVERS - for model code of slip-in cartridge/spool, see section 3

LI	DD	–	1	/	*	**	/*

LI: Cover according to ISO 7368

DD: Flow control valve:
DD = normally closed with stroke limiter

1: Size for LIDD:
1 = 16 **4** = 40
2 = 25 **5** = 50
3 = 32 **6** = 63

*****: Options: see section 6

******: Series number
LIDD = **50** all sizes **(1)**

/*: Seals material:
- = NBR
PE = FKM
BT = HNBR

(1): New series 50 of LIDD cover is highly recommended in combination with new high flow cartridges series 40
The use of old cartridges series 10, 11 and 31 may cause the impossibility to fully close the poppet

2 HYDRAULIC SYMBOLS

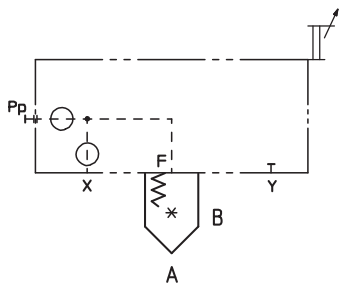

3 MODEL CODE OF SLIP-IN CARTRIDGES - for LIDD

SC LI	-	16	43	1	40	/	*

Cartridge according to ISO 7368

Size, the same of relevant cover:

16 25 32 40 50 63

Type of poppet

32, 33 = without damping nose
42 = as 32 but with damping nose
43 = as 33 but with damping nose

Series number **(1)**
40 = all sizes

Seals material:
- = NBR
PE = FKM
BT = HNBR

Spring cracking pressure, see section 4:

1 2 3 6

(1) New series 40 is mechanically interchangeable with standard flow series 31, 11 and 10 - cavity according to ISO 7368
New series 50 of LIDD cover is highly recommended in combination with new cartridges series 40
The use of old cartridges series 10, 11 and 31 may cause the impossibility to fully close the poppet

4 TYPE OF POPPET

Type of poppet	32	33	42	43
Functional sketch (Hydraulic symbol)	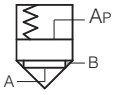	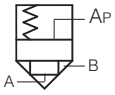	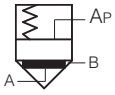	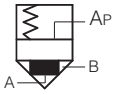
Typical section	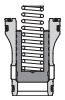	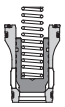	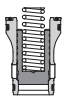	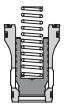
Area ratio A:Ap	**1:1,1**	**1:1,5**	**1:1,1**	**1:1,5**
Operating pressure	**420 bar max**			
Nominal flow at Δp 5 bar (l/min) see diagrams Q/Δp at section 7				
Size **16**	270	270	240	240
Size **25**	550	550	500	500
Size **32**	1000	1000	800	800
Size **40**	1700	1700	1400	1400
Size **50**	2500	2500	2200	2200
Size **63**	4000	4000	3300	3300

Cracking pressure (bar)

Spring		**1**	**2**	**3**	**6**	**1**	**2**	**3**	**6**	**1**	**2**	**3**	**6**	**1**	**2**	**3**	**6**
Size **16**	A→B	0.3	1.5	3	5.3	0.6	1.6	2.9	5.1	0.3	1.7	3.3	6.1	0.7	1.9	3.3	5.7
	B→A	3.2	16	30.5	50.3	1.2	3.2	5.8	10	3.6	17.7	34.5	63.4	1.3	3.7	6.5	11.2
Size **25**	A→B	0.3	1.5	3	5	0.6	1.4	3	5	0.3	1.7	3.3	6.1	0.7	1.5	3.3	5.8
	B→A	3.1	15.1	30.5	50.3	1.2	2.8	5.9	9.9	3.5	17.1	33.3	61.4	1.3	3	6.5	11.3
Size **32**	A→B	0.3	1.5	3	5	0.6	1.6	3	5.4	0.3	1.7	3.7	6.3	0.7	1.8	3.4	6.3
	B→A	3.5	17	34.2	56.7	1.2	3.2	6	10.7	3.9	18.8	41.6	71.1	1.4	3.6	6.9	12.7
Size **40**	A→B	0.3	1.5	3	5	0.6	1.5	3	5.5	0.4	1.8	3.5	6.4	0.7	1.8	3.6	7.3
	B→A	2.9	14.7	29.4	48.3	1.2	3	6	11	3.5	17.2	34	62	1.3	3.6	7.2	14.6
Size **50**	A→B	0.3	1.5	3	4.3	0.6	1.6	3	4.8	0.4	1.7	3.4	5.2	0.7	1.9	3.4	5.7
	B→A	3.6	16.9	33.8	48.4	1.4	3.6	6.7	10.8	4.2	18.9	38.1	58.9	1.5	4.4	7.7	12.9
Size **63**	A→B	0.3	1.5	2.9	4.2	0.6	1.5	2.9	5.8	0.4	1.7	3.4	4.7	0.7	1.8	3.3	6.5
	B→A	3.1	15	29.2	42	1.3	3.3	6.4	12.5	3.6	16.6	33.8	47.2	1.5	4	7.2	14.1

5 MAIN CHARACTERISTICS, SEALS AND HYDRAULIC FLUID

Assembly position / location	Any position		
Subplate surface finishing	Roughness index Ra 0,4 - flatness ratio 0,01/100 (ISO 1101)		
MTTFd values according to EN ISO 13849	150 years, for further details see technical table P007		
Ambient temperature	**Standard** execution = -30°C ÷ +70°C **/PE** option = -20°C ÷ +70°C **/BT** option = -40°C ÷ +70°C		
Compliance	RoHS Directive 2011/65/EU as last update by 2015/863/EU REACH Regulation (EC) n°1907/2006		
Seals, recommended fluid temperature	NBR seals (standard) = -20°C ÷ +80°C, with HFC hydraulic fluids = -20°C ÷ +50°C FKM seals (/PE option) = -20°C ÷ +80°C HNBR seals (/BT option) = -40°C ÷ +60°C, with HFC hydraulic fluids = -40°C ÷ +50°C		
Recommended viscosity	15÷100 mm²/s - max allowed range 2.8 ÷ 500 mm²/s		
Max fluid contamination level	ISO4406 class 20/18/15 NAS1638 class 9, see also filter section at www.atos.com or KTF catalog		
Hydraulic fluid	**Suitable seals type**	**Classification**	**Ref. Standard**
Mineral oils	NBR, FKM, HNBR	HL, HLP, HLPD, HVLP, HVLPD	DIN 51524
Flame resistant without water	FKM	HFDU, HFDR	ISO 12922
Flame resistant with water	NBR, HNBR	HFC	
Flow direction	A to B or B to A		
Functional cover operating pressure	ports X, Y: **420** bar		

6 OPTIONS

/E = with external attachments X and underneath port X supplied plugged;

******* = Calibrated plugs different from standard ones. LIDD covers in standard executions are not equipped with restrictors in the pilot channels. When ordering covers equipped with restrictors, it must be indicated at the end of the model code:

LIDD	-	1	/E	X	06
				Channel where the restrictor has to be provided: **X** = channel X	Size of the throttling hole in tenths of millimeters: **05** = 0,5 mm **10** = 1 mm **06** = 0,6 mm **12** = 1,2 mm **08** = 0,8 mm **15** = 1,5 mm

Note: For LIDD-***/E**, the calibrated orifices are located in the lateral port for external attachment
Calibrated orifices are not available for LIDD-1/E (size 16)

7 Q/ΔP DIAGRAMS - based on mineral oil ISO VG 46 at 50°C

SC LI slip-in cartridges, poppet type 32, 33, 42, 43

1 = poppet type 32 and 33
2 = poppet type 42 and 43

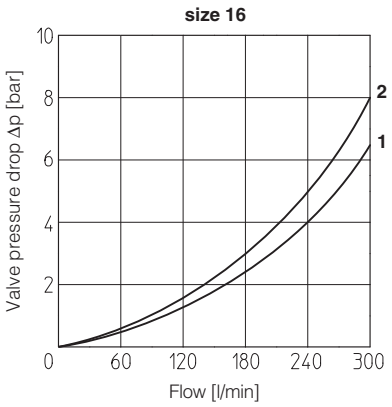

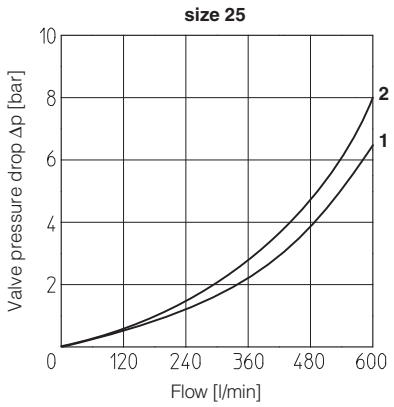

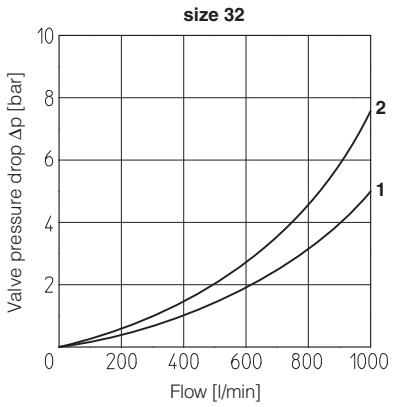

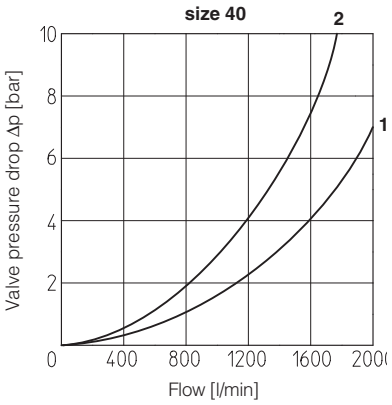

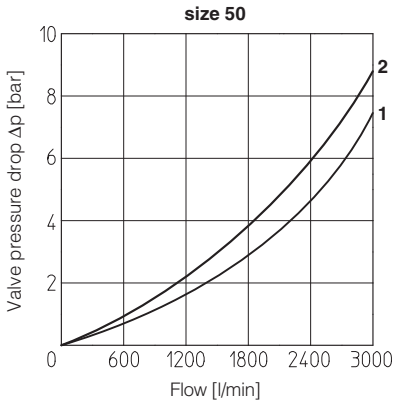

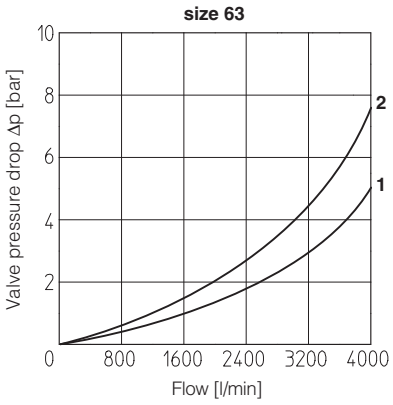

8 **LIDD COVER DIMENSIONS [mm] - for mounting interface and cavity dimensions, see tech. table P006**

Size 16÷40

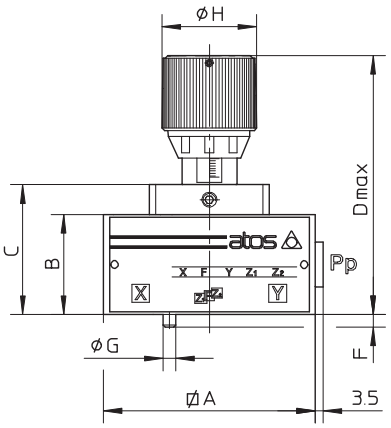

Size 50÷63

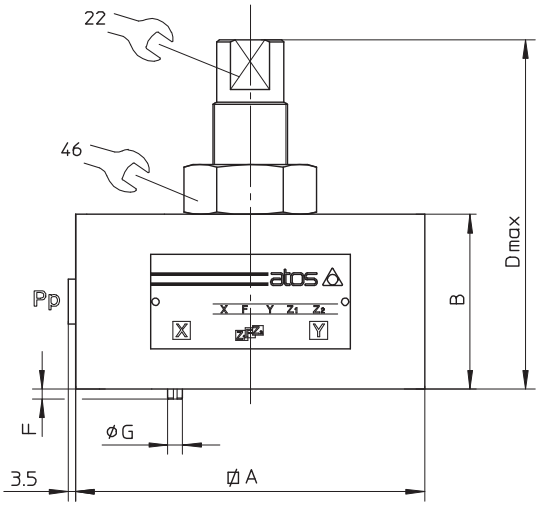

Covers	A	B	C	D (max)	F	G	H	Port Pp	Seals	Fastening bolts DIN 912 class 12.9	Tightening torque [Nm]	Mass [Kg]
LIDD-1	65	40	52	104	4	3	38	G 1/4”	2 OR-108	N°4 M8x45	35	2
LIDD-2	85	40	52	104	6	5	38	G 1/4”	2 OR-108	N°4 M12x45	125	2.4
LIDD-3	100	50	75	156	6	5	50	G 1/4”	2 OR-2043	N°4 M16x55	300	2.8
LIDD-4	125	60	85	166	6	5	50	G 1/4”	2 OR-3043	N°4 M20x70	600	6.7
LIDD-5	140	70	-	140	4	6	-	G 1/4”	2 OR-3043	N°4 M20x80	600	9.8
LIDD-6	180	80	-	151	4	6	-	G 3/8”	2OR-3050	N°4 M30x90	2100	17.5

ISO cartridge valves type LID*

Check function, high flow, **Pmax 420 bar**

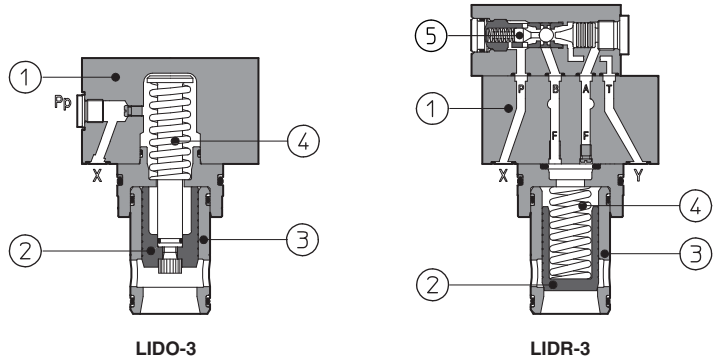

LIDO-3 **LIDR-3**

① Functional cover
② Poppet
③ Sleeve
④ Spring
⑤ Pilot operated check valve

Directional control valves in ISO cartridge design, specific for check functions. They are made by a functional cover ① and a 2-way **SC LI** slip-in cartridge.

Covers are available with different check functions:
LIDA, normally closed
LIDO, normally open
LIDB, normally closed with shuttle valve for pilot pressure selection
LIDR, normally closed with pilot operated check valve

The SC LI slip-in cartridge is available with different poppet shape to optimize the check control, see section 6.

It is made by a poppet ② sliding into a sleeve ③ and kept in normally closed position (open position for type 62 and 63) by the spring ④ available with different cracking pressure values.

Size: **16 to 100** ISO 7368
Max flow up to **9000 l/min** at Δp = 5 bar
Max pressure up to **420 bar**

1 **MODEL CODE OF FUNCTIONAL COVERS** - for model code of slip-in cartridge, see section 5, 7

LI	D	A	-	1	/	*	**	/	**	*

Cover according to ISO 7368

D = directional function

Cover configuration see section 2:
A = normally closed
O = normally open
B = normally closed, with shuttle valve for pilot selection
R = normally closed, with hydraulically operated pilot check valve for bidirectional flow **(1)**

Size:
1 = 16; **4** = 40; **8** = 80 (only for LIDA)
2 = 25; **5** = 50; **10** = 100 (only for LIDA)
3 = 32; **6** = 63 (not for LIDO)
LIDO is available only in sizes 16 to 50

Options: see section 3

Series number

Seals material:
- = NBR
PE = FKM
BT = HNBR

Optional different setting of calibrated plugs in the pilot channels, see section 3, 4

(1) LIDR functional cover operates as normally closed check valve with pilot control for bidirectional flow - see the below functional scheme as reference.
Free flow is normally permitted from A to B and blocked form B to A by the pressure on X pilot port
The flow from B to A is permitted by opening the valve though the pressure on pilot port Z1
Piloting ratio Z1 : X = 1 : 2.75

LIDR functional scheme

Functional scheme

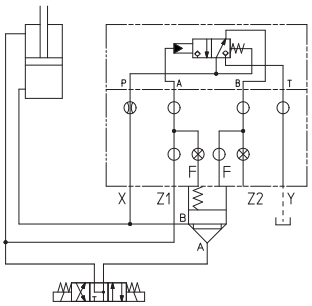

Simplified scheme

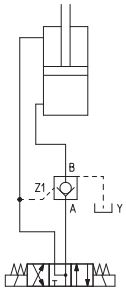

2 HYDRAULIC SYMBOLS (cover configuration)

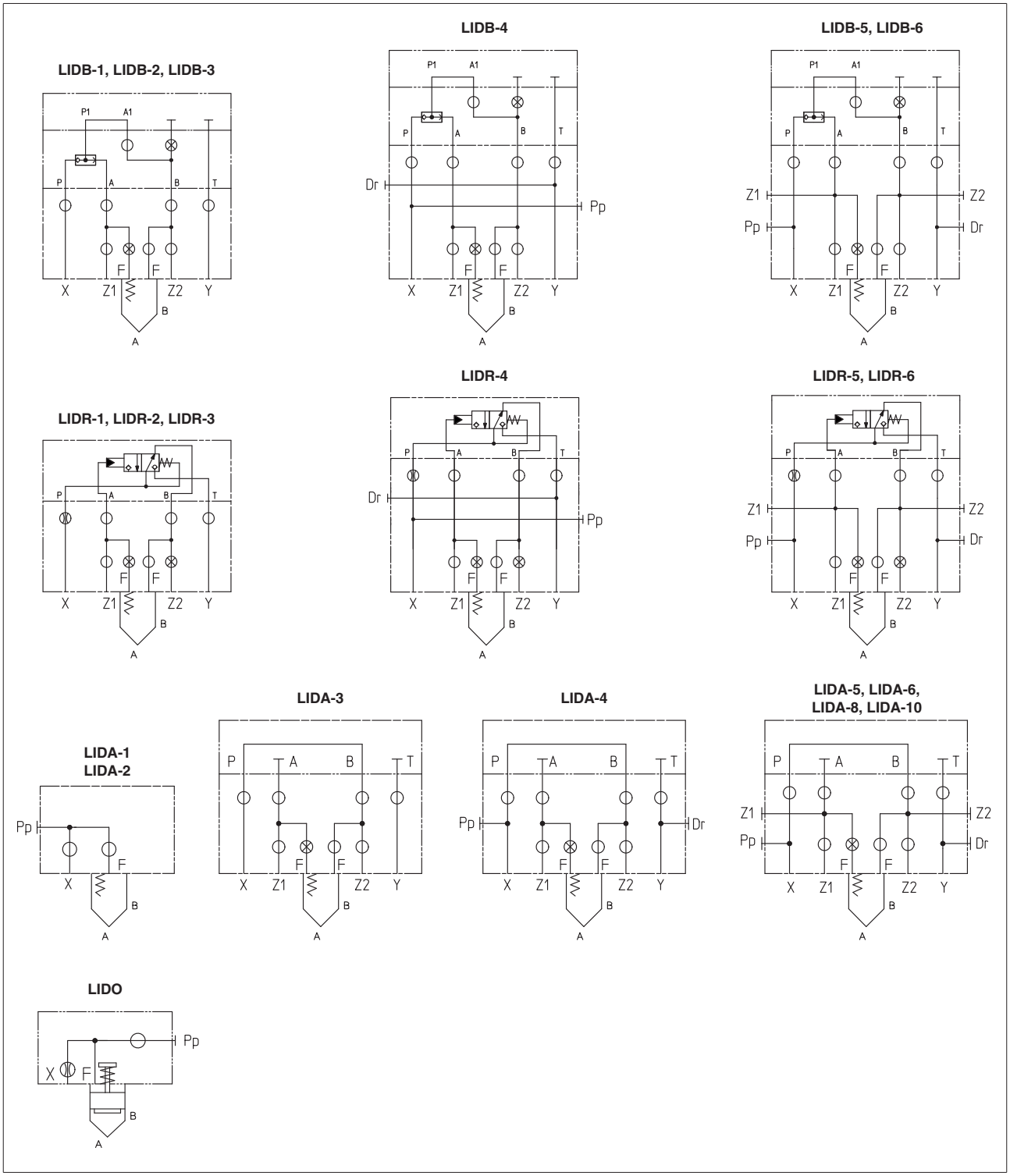

3 OPTIONS

For LIDA (sizes 16 and 25), for LIDO (all sizes) LIDB (sizes 40 ÷ 63), LIDR (sizes 40 ÷ 63):

/E = with external attachments Pp and underneath port X supplied plugged;

For LIDA, LIDB, LIDR:

/F = prearranged for coupling to an intermediate element with position detector for safety valves, see tab. EY120.

For all models:

******* = Calibrated plugs different from standard ones reported in section 4. The restrictors configuration (if different from the standard) it must be indicated at the end of the model code:

LIDB	-	4	/E	**

P
Channel where the restrictor has to be provided:
P = channel X, port P **Z1** = channel Z1
F = channel F **Z2** = channel Z2

06		
Size of the throttling hole in tenths of millimeters:		
00 = plugged	**08** = 0,8 mm	**15** = 1,5 mm
05 = 0,5 mm	**10** = 1 mm	**17** = 1,7 mm
06 = 0,6 mm	**12** = 1,2 mm	**20** = 2 mm

4 STANDARD ORIFICES CONFIGURATION

Port \ Cover	LIDA-1	LIDO-1	LIDB-1	LIDR-1	LIDA-2	LIDO-2	LIDB-2	LIDR-2	LIDA-3	LIDO-3	LIDB-3	LIDR-3	LIDA-4	LIDO-4	LIDB-4	LIDR-4	LIDA-5	LIDO-5	LIDB-5	LIDR-5	LIDA-6	LIDB-6	LIDR-6	LIDA-8	LIDA-10
X	M4	M4	-	-	M4	M6	-	-	-	M6	-	-	-	M6	-	-	-	M6	-	-	-	-	-	-	-
	-	10A	-	-	-	10A	-	-	-	12A	-	-	-	15F	-	-	-	15F	-	-	-	-	-	-	-
P	-	-	M6	M6	-	-	M6	M6	M6	-	M6	M6	M6	-	M6	M6	M6	-	M6	M6	M6	M6	M6	M8	M8
	-	-	-	12A	-	-	-	12A	15A	-	-	15A	17A	-	-	17A	20A	-	-	20A	20A	-	20A	20A	25A
Z2	-	-	M4	M4	-	-	M6	M6	M6	-	M6	M6	M6	-	M6	M6	M6	-	M6	M6	M6	M6	M6	M8	-
	-	-	-	00F	-	-	-	00F	-	-	-	00F	-	-	-	00F	-	-	-	00F	-	-	00F	-	-

M4 ÷ M6 = screw size; **10A ÷ 00F** = calibrated orifices diameters in tenths of mm; **A** = short calibrated hole, **F** = long calibrated hole;
- = without orifice;

5 MODEL CODE OF SLIP-IN CARTRIDGES type 32, 33, 42, 43 for LIDA, LIDB and LIDR

SC LI	-	16	43	1	40	/	*

Cartridge according to ISO 7368

Size, the same of relevant cover:
16 25 32 40 50 63 80 100

Type of poppet (not for LIDO)
32, 33 (size 16 to 100) = without damping nose
42 (size 16 to 80) = as 32 but with damping nose
43 (size 16 to 100) = as 33 but with damping nose

Series number

Seals material:
- = NBR
PE = FKM
BT = HNBR

Spring cracking pressure, see section 6 :
1, **2**, **3**, **6**

6 TYPE OF POPPET

Type of poppet	32	33	42	43
Functional sketch (Hydraulic symbol)	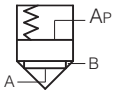	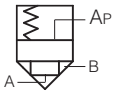	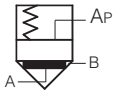	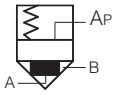
Typical section	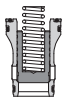	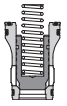		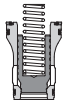
Area ratio A:Ap	**1:1,1**	**1:1,5**	**1:1,1**	**1:1,5**
Operating pressure	**420 bar max**			
Nominal flow at Δp 5 bar (l/min) see diagrams Q/Δp at section 10				
Size **16**	270	270	240	240
Size **25**	550	550	500	500
Size **32**	1000	1000	800	800
Size **40**	1700	1700	1400	1400
Size **50**	2500	2500	2200	2200
Size **63**	4000	4000	3300	3300
Size **80**	5500	5500	4000	4000
Size **100**	9000	9000	-	6300

Cracking pressure (bar)

Spring		1	2	3	6	1	2	3	6	1	2	3	6	1	2	3	6
Size **16**	A→B	0.3	1.5	3	5.3	0.6	1.6	2.9	5.1	0.3	1.7	3.3	6.1	0.7	1.9	3.3	5.7
	B→A	3.2	16	30.5	50.3	1.2	3.2	5.8	10	3.6	17.7	34.5	63.4	1.3	3.7	6.5	11.2
Size **25**	A→B	0.3	1.5	3	5	0.6	1.4	3	5	0.3	1.7	3.3	6.1	0.7	1.5	3.3	5.8
	B→A	3.1	15.1	30.5	50.3	1.2	2.8	5.9	9.9	3.5	17.1	33.3	61.4	1.3	3	6.5	11.3
Size **32**	A→B	0.3	1.5	3	5	0.6	1.6	3	5.4	0.3	1.7	3.7	6.3	0.7	1.8	3.4	6.3
	B→A	3.5	17	34.2	56.7	1.2	3.2	6	10.7	3.9	18.8	41.6	71.1	1.4	3.6	6.9	12.7
Size **40**	A→B	0.3	1.5	3	5	0.6	1.5	3	5.5	0.4	1.8	3.5	6.4	0.7	1.8	3.6	7.3
	B→A	2.9	14.7	29.4	48.3	1.2	3	6	11	3.5	17.2	34	62	1.3	3.6	7.2	14.6
Size **50**	A→B	0.3	1.5	3	4.3	0.6	1.6	3	4.8	0.4	1.7	3.4	5.2	0.7	1.9	3.4	5.7
	B→A	3.6	16.9	33.8	48.4	1.4	3.6	6.7	10.8	4.2	18.9	38.1	58.9	1.5	4.4	7.7	12.9
Size **63**	A→B	0.3	1.5	2.9	4.2	0.6	1.5	2.9	5.8	0.4	1.7	3.4	4.7	0.7	1.8	3.3	6.5
	B→A	3.1	15	29.2	42	1.3	3.3	6.4	12.5	3.6	16.6	33.8	47.2	1.5	4	7.2	14.1
Size **80**	A→B	0.3	1.5	3	4.6	0.6	1.5	3	5.3	0.3	1.7	3.3	4.9	0.7	1.8	3.3	5.9
	B→A	3	14.8	29.2	45.2	1.3	3.1	6.3	11.2	3.4	16.6	32.9	48.8	1.4	3.8	7	12.4
Size **100**	A→B	0.3	1.5	3		0.6	1.5	3.1	6					0.7	1.9	3.8	7.4
	B→A	3	15	30.5		1.2	3	6.3	12.2					1.5	3.9	7.8	14.9

7 MODEL CODE OF SLIP-IN CARTRIDGES type 52, 62, 63 for LIDA and LIDO

SC LI	-	16	52	1	**	/*
Cartridge according to ISO 7368					Series number	Seals material: **-** = NBR **PE** = FKM **BT** = HNBR

Size, the same of relevant cover:
16 25 32 40 50

Type of poppet:
52 = normally closed, only for LIDA;
62 = normally open without damping nose, only for LIDO;
63 = normally open with damping nose, only for LIDO

Spring cracking pressure:
1 = 0,3 bar for poppet 52;
2 = 1,5 bar for poppet 52;
3 = 3 bar for all poppets
6 = 6 bar for all poppets

8 TYPICAL FUNCTIONS OF POPPETS

Type of poppet	52	62	63
Functional sketch (Hydraulic symbol)	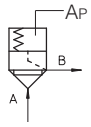	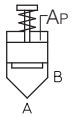	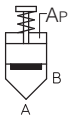
Typical section		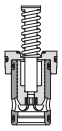	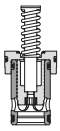
Area ratio A:Ap	**1:1,1**	**1:1,1**	**1:1,1**
Operating pressure	**420 bar max**		
Nominal flow at Δp 5 bar (l/min) see diagrams Q/Δp at section 10			
Size **16**	160	160	160
Size **25**	400	400	400
Size **32**	600	600	600
Size **40**	1200	1200	1200
Size **50**	1800	1800	1800

Cracking pressure (bar)

Spring		**1**	**2**	**3**	**6**	**3**	**6**
Size **16**	A→B	0.3	1.5	3	6	Normally open	Normally open
Size **25**	A→B	0.3	1.5	3	6		
Size **32**	A→B	0.3	1.5	3	6		
Size **40**	A→B	0.3	1.5	3	6		
Size **50**	A→B	0.3	1.5	3	6		

9 MAIN CHARACTERISTICS, SEALS AND HYDRAULIC FLUID

Assembly position / location	Any position		
Subplate surface finishing	Roughness index Ra 0,4 - flatness ratio 0,01/100 (ISO 1101)		
MTTFd values according to EN ISO 13849	150 years, for further details see technical table P007		
Compliance	RoHS Directive 2011/65/EU as last update by 2015/863/EU REACH Regulation (EC) n°1907/2006		
Ambient temperature	**Standard** execution = -30°C ÷ +70°C **/PE** option = -20°C ÷ +70°C **/BT** option = -40°C ÷ +70°C		
Seals, recommended fluid temperature	NBR seals (standard) = -20°C ÷ +80°C, with HFC hydraulic fluids = -20°C ÷ +50°C FKM seals (/PE option) = -20°C ÷ +80°C HNBR seals (/BT option) = -40°C ÷ +60°C, with HFC hydraulic fluids = -40°C ÷ +50°C		
Recommended viscosity	15÷100 mm²/s - max allowed range 2.8 ÷ 500 mm²/s		
Max fluid contamination level	ISO4406 class 20/18/15 NAS1638 class 9, see also filter section at www.atos.com or KTF catalog		
Hydraulic fluid	**Suitable seals type**	**Classification**	**Ref. Standard**
Mineral oils	NBR, FKM, HNBR	HL, HLP, HLPD, HVLP, HVLPD	DIN 51524
Flame resistant without water	FKM	HFDU, HFDR	ISO 12922
Flame resistant with water	NBR, HNBR	HFC	
Flow direction	As shown in the symbols of table 2		
Functional cover operating pressure	Ports P, A, B, X, Z1, Z2: **420** bar		

10 Q/ΔP DIAGRAMS based on mineral oil ISO VG 46 at 50°C

10.1 SC LI slip-in cartridges, poppet type 32, 33, 42, 43

size 16

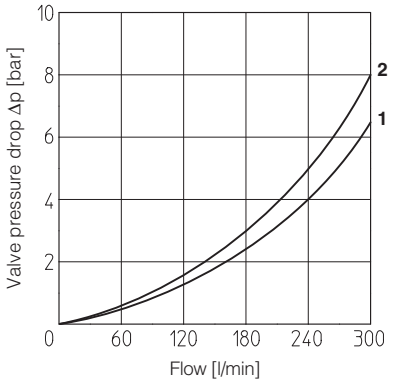

size 25

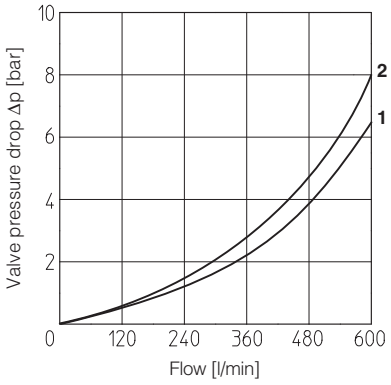

size 32

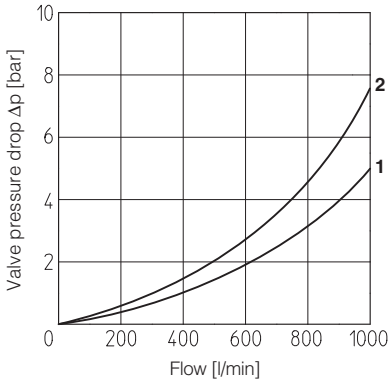

size 40

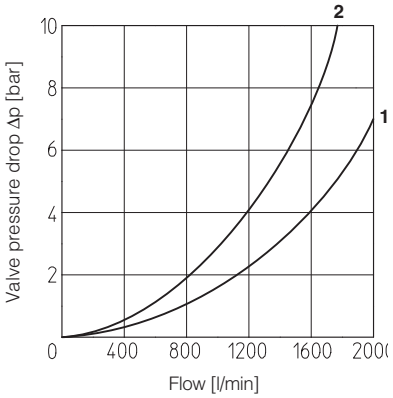

size 50

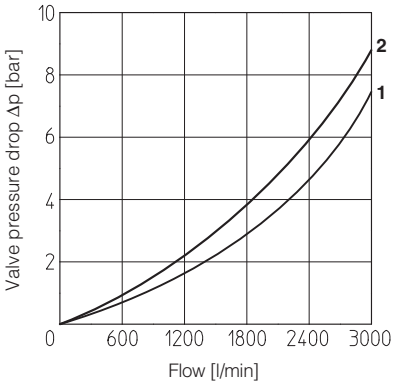

size 63

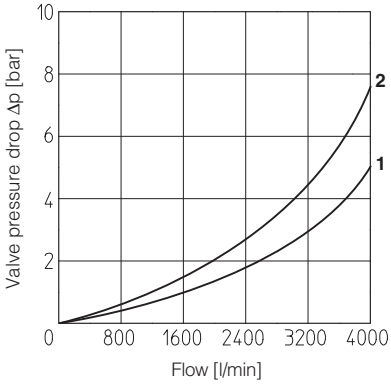

size 80

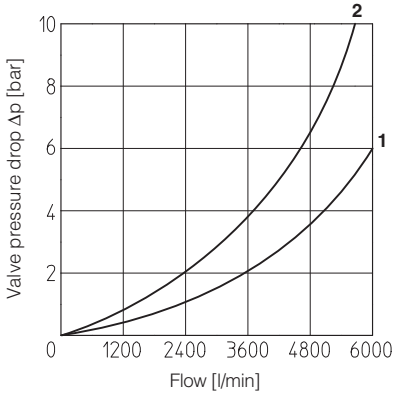

size 100

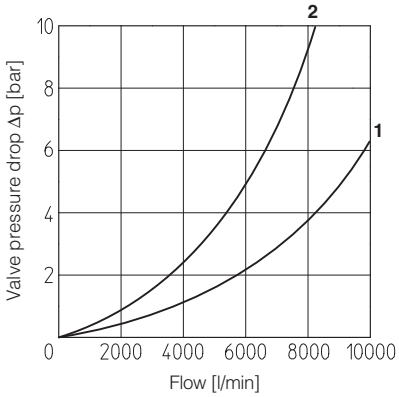

High flow - series 40

1 = poppet type 32 and 33
2 = poppet type 42 and 43

10.2 SC LI slip-in cartridges, poppet type 52, 62, 63

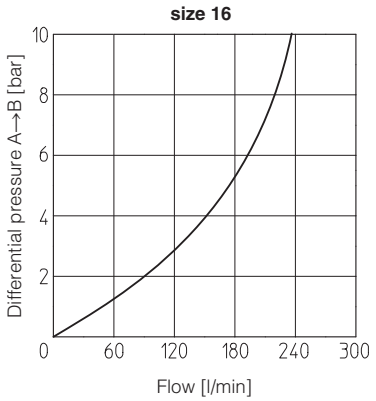

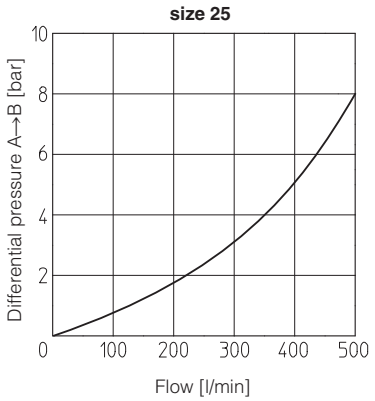

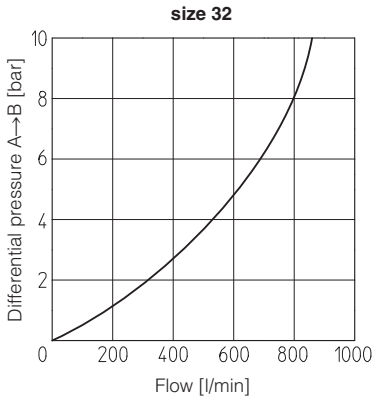

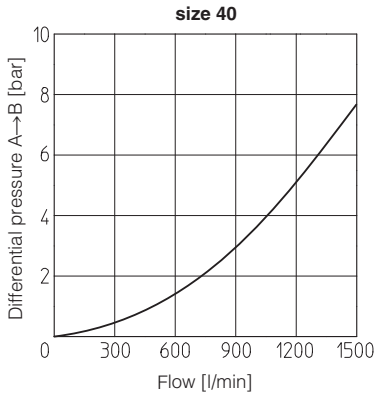

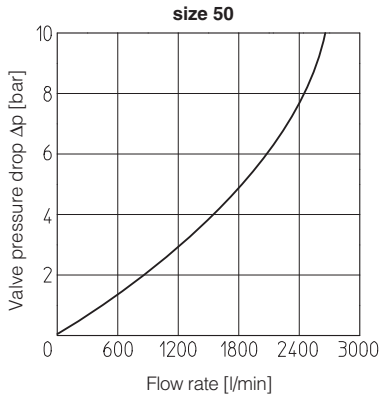

11 COVER DIMENSIONS [mm] - for mounting interface and cavity dimensions, see tech. table P006

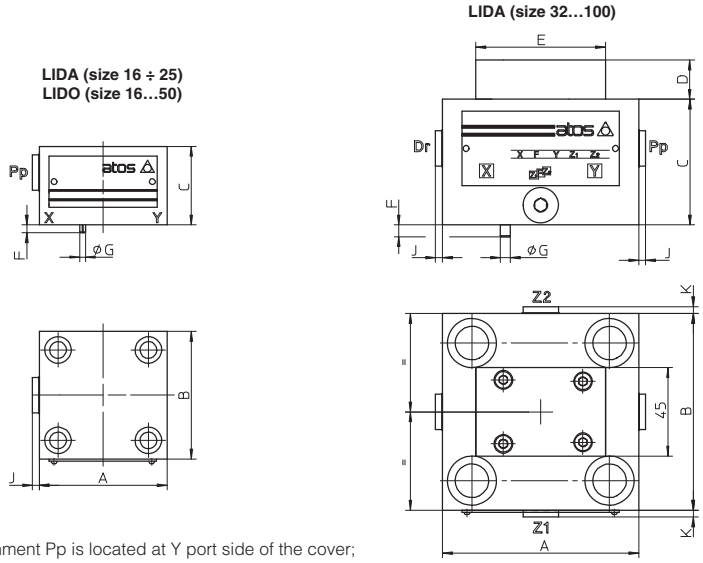

Note:
For **LIDO-2**: the external attachment Pp is located at Y port side of the cover;
For **LIDA-80** and **LIDA-100** the cover has round shape

Covers (1)	A	B	C	D	E	F	G	J	K	Port Pp-Dr	Port Z1-Z2	Seals	Fastening bolts DIN 912 class 12.9	Tightening torque [Nm]	Mass [Kg]
LIDA-1 **LIDO-1**	65	65	40	-	-	4	3	3.5	-	G 1/4”	-	2 OR-108 1 OR-108	N°4 M8x45	35	1.4
LIDA-2 **LIDO-2**	85	85	40	-	-	6	5	3.5	-	G 1/4”	-	2 OR-108 1 OR-108	N°4 M12x45 N°4 M12x50	125	1.8
LIDA-3 **LIDO-3**	100	100	50 60	20	66	6	5	- 3.5	-	G 1/4”	-	4 OR-2043 1 OR-2043	N°4 M16x55 N°4 M16x60	300	2.3
LIDA-4 **LIDO-4**	125	125	60 100	20	66	6	5	3.5	-	G 1/4”	-	4 OR-3043 1 OR-3043	N°4 M20x70 N°4 M20x100	600	6.2
LIDA-5 **LIDO-5**	140	140	70 110	20	66	4	6	3.5	3.5	G 1/4”	G 1/4”	4 OR-3043 1 OR-3043	N°4 M20x80 N°4 M20x110	600	9.3
LIDA-6	180	180	80	20	66	4	6	3.5	3.5	G 3/8”	G 3/8”	4 OR-3050	N°4 M30x90	2100	17.1
LIDA-8	Ø250	-	80	30	73	6	8	3.5	3.5	G 3/8”	G 3/8”	2 OR-4075	N°4 M24x90	1000	27
LIDA-10	Ø250	-	80	30	73	6	10	3.5	3.5	G 1/2”	G 3/8”	2 OR-4075	N°4 M30x120	2100	54

LIDB (size 16)

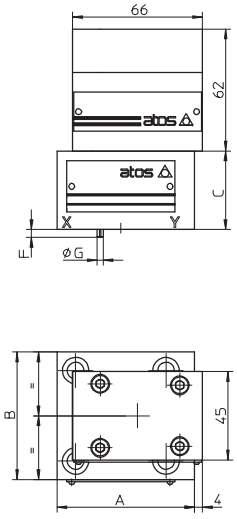

LIDB (size 25…63)

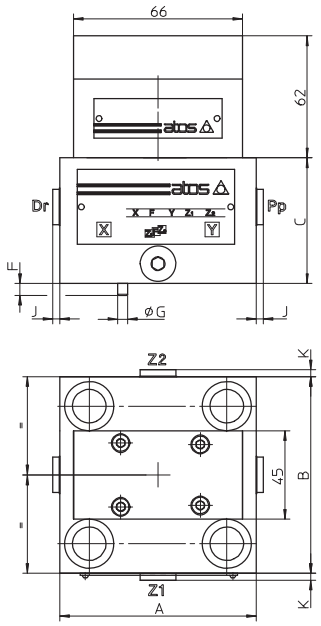

Note:
For **LIDB-6** the external attachments Pp, Dr, Z1 and Z2 are inverted each others respect to the showed sketch

Covers	A	B	C	F	G	J	K	Port Pp-Dr	Port Z1-Z2	Seals	Fastening bolts DIN 912 class 12.9	Tightening torque [Nm]	Mass [Kg]
LIDB-1	70	65	40	4	3	-	-	-	-	4 OR-108	N°4 M8x45	35	2.2
LIDB-2	85	85	40	6	5	-	-	-	-	4 OR-108	N°4 M12x45	125	2.6
LIDB-3	100	100	50	6	5	-	-	-	-	4 OR-2043	N°4 M16x55	300	3.1
LIDB-4	125	125	60	6	5	3.5	-	G 1/4”	-	4 OR-3043	N°4 M20x70	600	7
LIDB-5	140	140	70	4	6	3.5	3.5	G 1/4”	G 1/4”	4 OR-3043	N°4 M20x80	600	10.1
LIDB-6 (1)	180	180	80	4	6	3.5	3.5	G 3/8”	G 3/8”	4 OR-3050	N°4 M30x90	2100	17.9

LIDR (size 16…32)

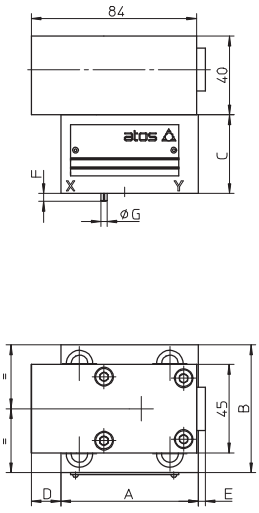

LIDR (size 40…63)

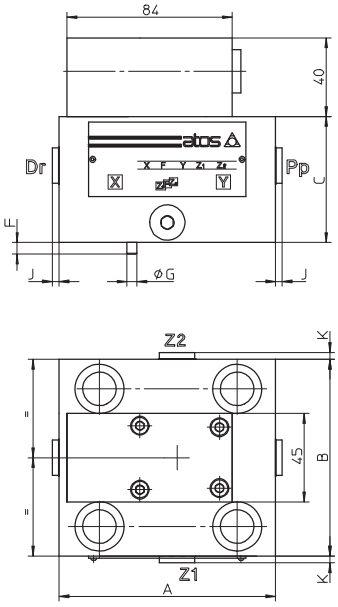

Note:
For **LIDR-6** the position of external attachments Pp, Dr, Z1 and Z2 are inverted each others respect to the showed sketch

Covers	A	B	C	D	E	F	G	J	K	Port Pp-Dr	Port Z1-Z2	Seals	Fastening bolts DIN 912 class 12.9	Tightening torque [Nm]	Mass [Kg]
LIDR-1	70	65	40	4	3.5	4	3	-	-	-	-	4 OR-108	N°4 M8x45	35	2.5
LIDR-2	85	85	40	13.5	-	6	5	-	-	-	-	4 OR-108	N°4 M12x45	125	2.9
LIDR-3	100	100	50	6	-	6	5	-	-	-	-	4 OR-2043	N°4 M16x55	300	3.4
LIDR-4	125	125	60	-	-	6	5	3.5	-	G 1/4”	-	4 OR-3043	N°4 M20x70	600	7.3
LIDR-5	140	140	70	-	-	4	6	3.5	3.5	G 1/4”	G 1/4”	4 OR-3043	N°4 M20x80	600	10.4
LIDR-6	180	180	80	-	-	4	6	3.5	3.5	G 3/8”	G 3/8”	4 OR-3050	N°4 M30x90	2100	18.3

4 ACCESSORIES

INDEX

ACCESSORIES

		Size	Pmax [bar]	Table	Pag
SENSORS					
E-ATR-8	pressure transducer with amplified analog output signal	G1/4”	400	GS465	912
PRESSURE SWITCHES					
E-DAP-2	electronic pressure switch with digital output signals and display	G1/4”	400	GS470	914
MAP	manual pressure switch with fixed differential switching pressure		630	D250	916
SUBPLATES					
BA	single station, mounting surfaces ISO 4401, 6264 and 5781	06 ÷ 32	350	K280	918
HAND LEVERS					
Auxiliary hand levers for on-off and proportional valves				E138	922
HANDWHEELS & KNOBS					
Regulating handwheels and knobs for on-off and proportional valves				K150	924
CONNECTORS					
Electric and electronic connectors for transducers, pumps, on-off and proportional valves				K800	926

Supplementary components range available on **www.atos.com**

Pressure transducers type E-ATR-8

analog, for open and closed loop systems

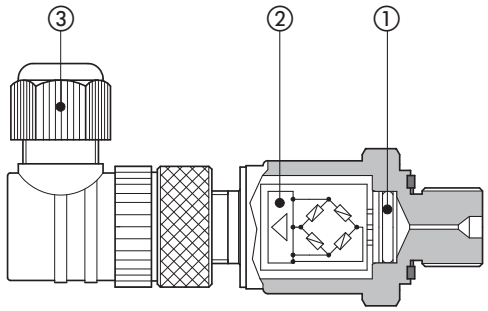

E-ATR-8 / 400

1 MODEL CODE

E-ATR-8	/	400	/	*	*
Pressure transducer					Series number

Pressure measuring range:
60 = 0 ÷ 60 bar
100 = 0 ÷ 100 bar
160 = 0 ÷ 160 bar
250 = 0 ÷ 250 bar
400 = 0 ÷ 400 bar

Options:
- = voltage output signal 0 ÷ 10 V
I = current output signal 4 ÷ 20 mA

E-ATR-8

This pressure transducers measure the static and dynamic pressure of the hydraulic fluid, supplying a voltage or current output signal.

The sensor is composed by a thin-film circuit ①, with high resistance to overloads and pressure peaks.

The integrated electronic circuit ② supplies an amplified voltage or current output signal, proportional to the hydraulic pressure, with thermal drift compensation.

E-ATR-8 equip pressure control digital proportional valves with integral transducer and electronics, REB/RES execution.

They are also used in association with other Atos digital proportionals to perform closed loop pressure controls:

- variable displacement axial piston pumps, PE(R)S execution (see tech table AS170)
- directional control valves with additional closed loop pressure control, SP and SF options on TES/LES execution (see tech table FS500)

Features:

- Factory preset and calibrated
- Standard 5 pin M12 main connector ③
- IP67 protection degree
- CE mark according to EMC directive

2 MAIN CHARACTERISTICS

Pressure measuring range	0 ÷ 60/100/160/250/400 bar; other values available on request Note: negative pressure can damage the pressure transducer
Overload pressure	2 x FS without exceeding 600 bar
Burst pressure	5 x FS without exceeding 1700 bar
Response time	≤ 2 ms
Temperature range	Operating -40 ÷ +100 °C; Storage -40 ÷ +100 °C; Fluid: -40 ÷ +100 °C
Thermal drift	@ zero: ≤ ±0,025 % FS/°C max; @ FS: ≤ ±0,025 % FS/°C max
Accuracy	≤ ±1,2 % FS
Non-Linearity	≤ ±0,5 % of FS (BFSL) as per IEC 61298-2
Fluid Compatibility	Hydraulic oil as per DIN51524...535; for water-glycol, phosphate ester and skydrol® , please contact Atos technical department
Power supply	24 VDC nominal; 14 ÷ 30 VDC for standard (8 ÷ 30 VDC for /I option); Imax 25 mA
Output signal	Standard: voltage output signal 0 ÷ 10 V (3 pins); Min load > maximum output signal / 1 mA /I option: current output signal 4 ÷ 20 mA (2 pins); Max load ≤ (power supply - 8 V) / 0,02 mA
Wiring protections	Against reverse polarity on power supply and short-circuit on output signal
Materials	Wetted parts: stainless steel 316L (13-8 PH for sensor); seals: FPM/FKM
Mass	Approx. 57 g
Electromagnetic compatibility (EMC)	According to Directive 2014/30/UE EN 61326 emission (group 1, class B) and immunity (industrial application)
Service life	$1x10^6$ load cycles
MTTF	> 100 years
Compliance	RoHs Directive 2011/65/EU as last update by 2015/863/EU REACH Regulation (EC) n°1907/2006
Vibration resistance	20 g according to DIN EN 60068-2-6 from 20 to 2000 Hz
Shock resistance	40 g / 6 ms / half-sinusoid, according to DIN EN 60068-2-27
Protection class	IP67 with mating connector
Hydraulic connection	1/4" GAS - DIN 3852 (pressure port orifice Ø 0,6 mm)
Electrical connection	Type: plastic 5 pins M12 at 90° (DIN 43650-C) with cable gland type PG7 for cable max Ø 6 mm Protection: IP67 according to EN 60529; Insulation: according to VDE 0110-C

Notes: FS = Full Scale; **BFSL** = Best Fit Straight Line

3 INSTALLATION AND COMMISSIONING

3.1 Warning

E-ATR-8 transducers have to be installed as near as possible to the point where the pressure have to be measured, taking care that the oil flow is not turbulent.

3.2 Commissioning

Install the transducer in the hydraulic circuit.

Switch-off the power supply before connecting and disconnecting the transducer connector as shown in scheme 4 .

4 ELECTRONIC CONNECTIONS

E-ATR-8 / *

voltage output signal 0 ÷ 10 V

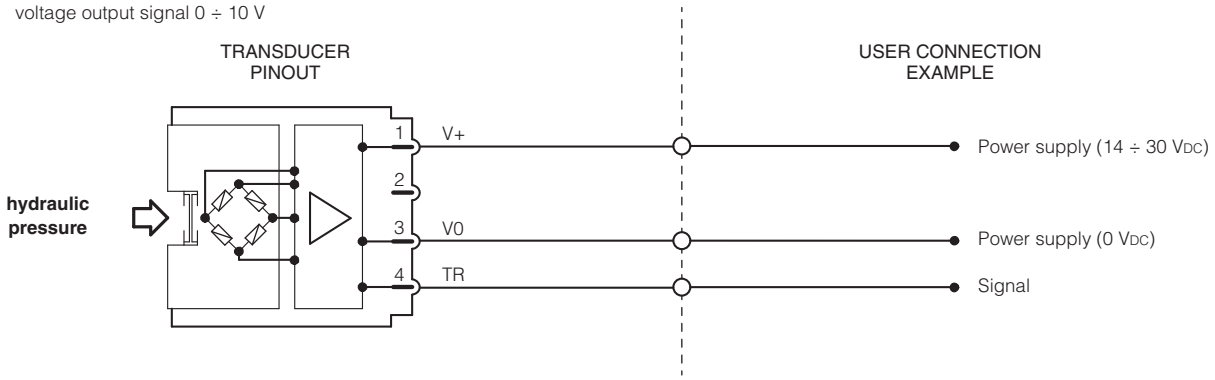

E-ATR-8 / * / I

current output signal 4 ÷ 20 mA

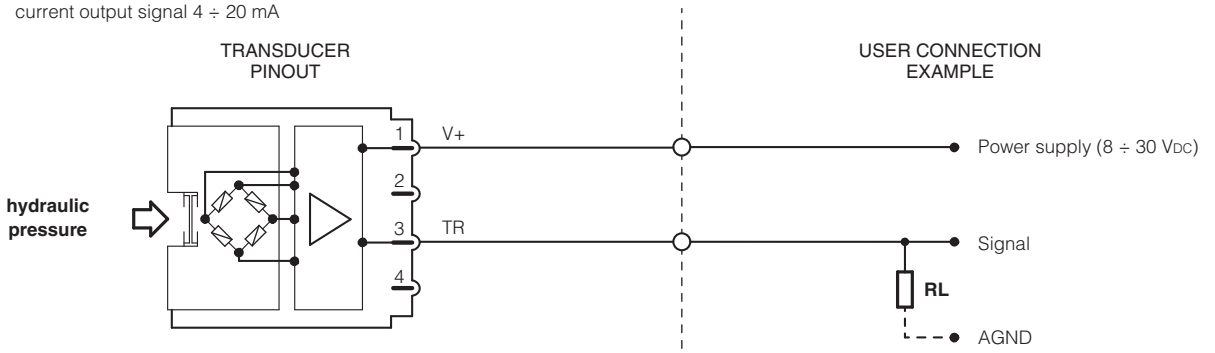

The max resistance **RL** [Ω] is calculated: $\mathbf{RL} = \frac{\text{Vsupply}}{0{,}02} - \frac{10[\text{V}]}{[\text{A}]}$

5 OVERALL DIMENSIONS [mm]

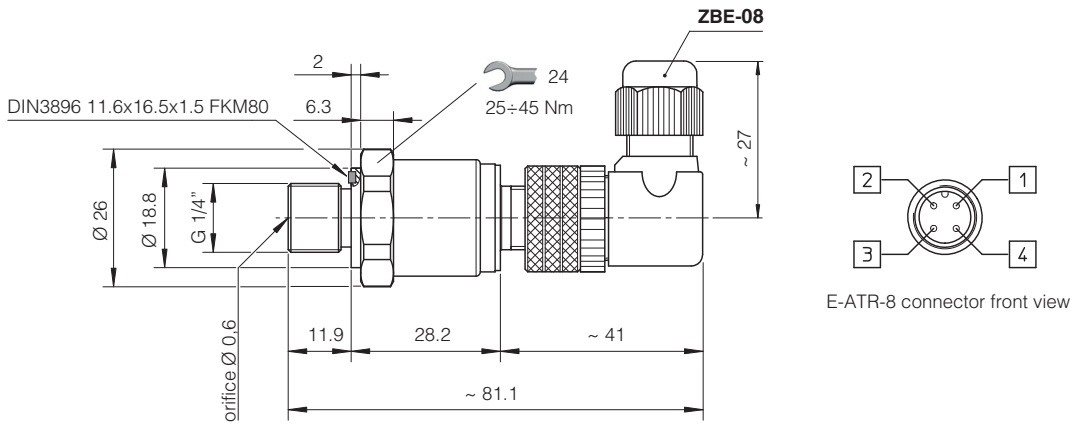

Electronic pressure switches type E-DAP-2

digital, with integral digital display

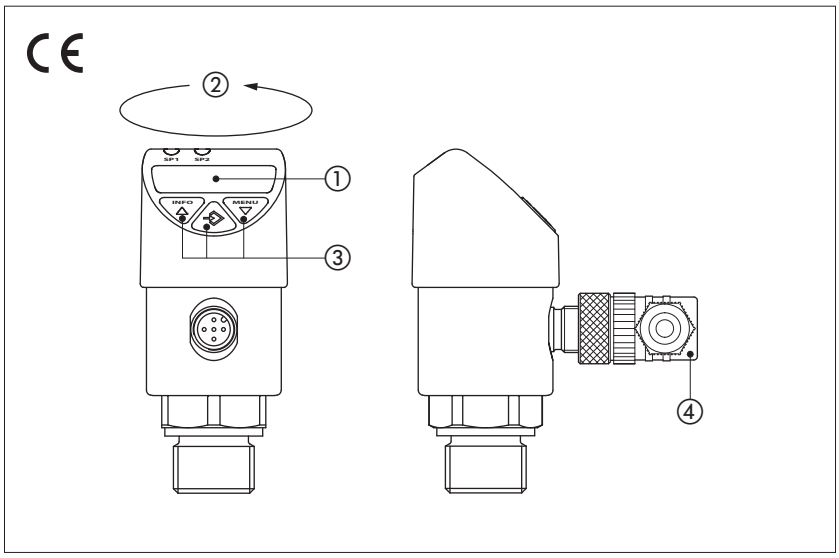

E-DAP-2

Compact electronic pressure switch with integral digital display, available for 3 different pressure ranges.

The working pressure is real time measured and monitored on a 4 digits display ① in bar, Mpa, kPa, psi or kg/cm². The display can be mechanically rotated on 1 axis ② and turned electronically through 180°.

It provides two independent output with electronic contacts which are triggered when the pressure in the hydraulic circuit reaches the switch point or window (see section 4).

The functional parameters as the pressure switching point, hysteresis range, pressure measuring units and others additional functions can be easily set by the end user trough proper programming keys ③ .

For detailed instructions about the use of the electronic pressure switch refer to the operating manual supplied with the instrument.

Features:

- Standard 5 pin M12 main connector ④
- IP65 / IP67 protection degree
- CE mark according to EMC directive

1 MODEL CODE

E-DAP-2	-	250	/	2	*
Electronic pressure switch					Series number

Pressure range:
100 = 100 bar
250 = 250 bar
400 = 400 bar

2 = 2 switching outputs

2 MAIN CHARACTERISTICS

Model	E-DAP-2-100	E-DAP-2-250	E-DAP-2-400
Pressure measuring range [bar] (1)	0,5 ÷ 100	1,25 ÷ 250	2 ÷ 400
Overload pressure	2 x FS		
Response time	≤ 10 ms		
Temperature range	Operating -20 ÷ +80 °C; Storage -20 ÷ +80 °C; Fluid: -20 ÷ +85 °C		
Thermal drift	Zero ≤ ±0,02 % FS / °C (typ); span ≤ ±0,01 % FS / °C (typ)		
Accuracy display	≤ ±1,0 % of FS ±1 digit		
Non-Linearity	≤ ±0,5 % of span BFSL as per IEC 61298-2		
Fluid compatibility	Hydraulic oil as per DIN51524...535; for water-glycol, phosphate ester and skydrol® , please contact Atos technical department		
Power supply	15 ÷ 35 VDC; Imax 600 mA		
N° of outputs	2		
Output type	PNP transistor output (ON state ≅ power supply - 1 V)		
Switching current	250 mA max per output (resistive load)		
Wiring protections	Against reverse polarity on power supply and short-circuit on output signal		
Display	4 digit, 14 segment led, red, height 9 mm		
Materials	Wetted parts: stainless steel 316L (13-8 PH for sensor); seals: FPM/FKM		
Mass	174 g		
Electromagnetic compatibility (EMC)	According to Directive 2014/30/UE EN 61326 emission (group 1, class B) and immunity (industrial application)		
Service life	$1x10^6$ load cycles		
MTTF	> 100 years		
Compliance	RoHs Directive 2011/65/EU as last update by 2015/863/EU REACH Regulation (EC) n°1907/2006		
Vibration resistance	10 g according to IEC 60068-2-6, under resonance		
Shock resistance	50 g according to IEC 60068-2-27		
Protection class	IP65 / IP67 with mating connector		
Hydraulic connection	1/4" GAS - DIN 3852 form E (pressure port orifice Ø 0,6 mm)		
Electrical connection	Type: plastic 5 pins M12 at 90° (DIN 43650-C) with cable gland type PG7 for cable max Ø 6 mm Protection: IP67 according to EN 60529; Insulation: according to VDE 0110-C		

Notes: FS = Full Scale; **BFSL** = Best Fit Straight Line; **(1)** negative pressure lower than -1 bar can damage the device

3 FEATURES

- Two independent PNP transistor switching outputs. Imax up to 250 mA per output
- 4 digit display, adjustable on one axes without tools for best visual position or visualized digits can be turned electronically of 180°
- Pressure reading selectable in: bar, Mpa, kPa, psi, kg/cm²
- Selection of different display modes: unit switching, offset adjustment, actual pressure value, minimum or maximum pressure value, function switch points, function reset points, display updates/second.
- Hydraulic connection G1/4"
- Electric connector M12x1 supplied with the pressure switch

4 OUTPUTS SWITCHING FUNCTION

The independent outputs can be settable using two different functions: Hysteresis and Windows.

Hysteresis function - see 4.1

If the system pressure fluctuates around the set point, the hysteresis keeps the switching status of the outputs stable. With increasing system pressure, the output switches when reaching the switch point (SP).

- HNO - contact normally open: active
- HNC - contact normally closed: inactive

With system pressure falling again, the output will not switch back before the reset point (RP) is reached.

- HNO - contact normally open: inactive
- HNC - contact normally closed: active

Window function - see 4.2

The window function allows for the control of a defined range.
When the system pressure is between window High (FH) and window Low (FL), the output switches on.

- FNO - contact normally open: active
- FNC - contact normally closed: inactive

When the system pressure is outside window High (FH) and window Low (FL), the output does not switch on.

- FNO - contact normally open: inactive
- FNC - contact normally closed: active

Delay times (0 ... 50 s) - see 4.3

This makes it possible to filter out unwanted pressure peaks of a short duration or a high frequency (damping).

The pressure must be present for at least a certain pre-set time for the output to switch on. The output does not immediately change its status when it reaches the switching event (SP), but rather only after the pre-set delay time (DS).

If the switching event is no longer present after the delay time, the switch output does not change.
The output only switches back when the system pressure has fallen down to the reset point (RP) and stays at or below the reset point (RP) for at least the pre-set delay time (DR).

If the switching event is no longer present after the delay time, the switch output does not change.

Delay times is available for Hysteresis and Window functions.

4.1 Hysteresis Function

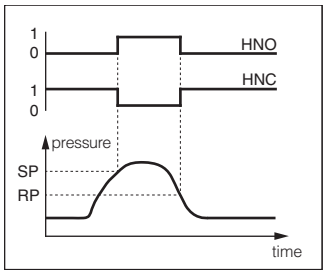

4.2 Window Function

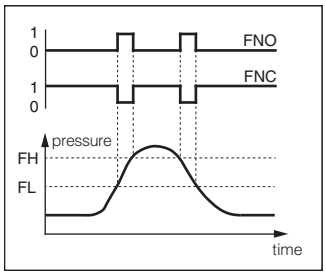

4.3 Delay times (0 ... 50 s)

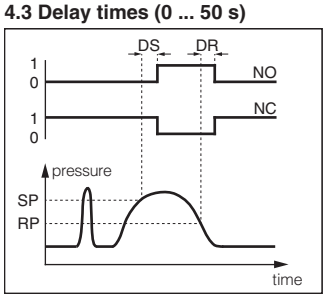

5 INSTALLATION AND USE

E-DAP-2 can be installed in any position.

Rotate the 4 digit display in order to provide the best visual orientation.

Connect M12 electric connector according the wiring diagram in section 6 .

Consult the operating manual, supplied with the electronic pressure switch, for the parameters setting.

6 ELECTRONIC CONNECTIONS

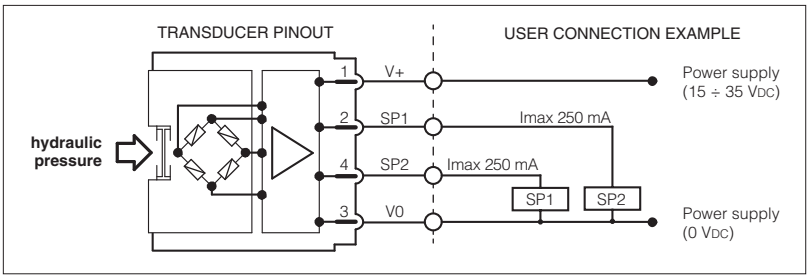

7 OVERALL DIMENSIONS [mm]

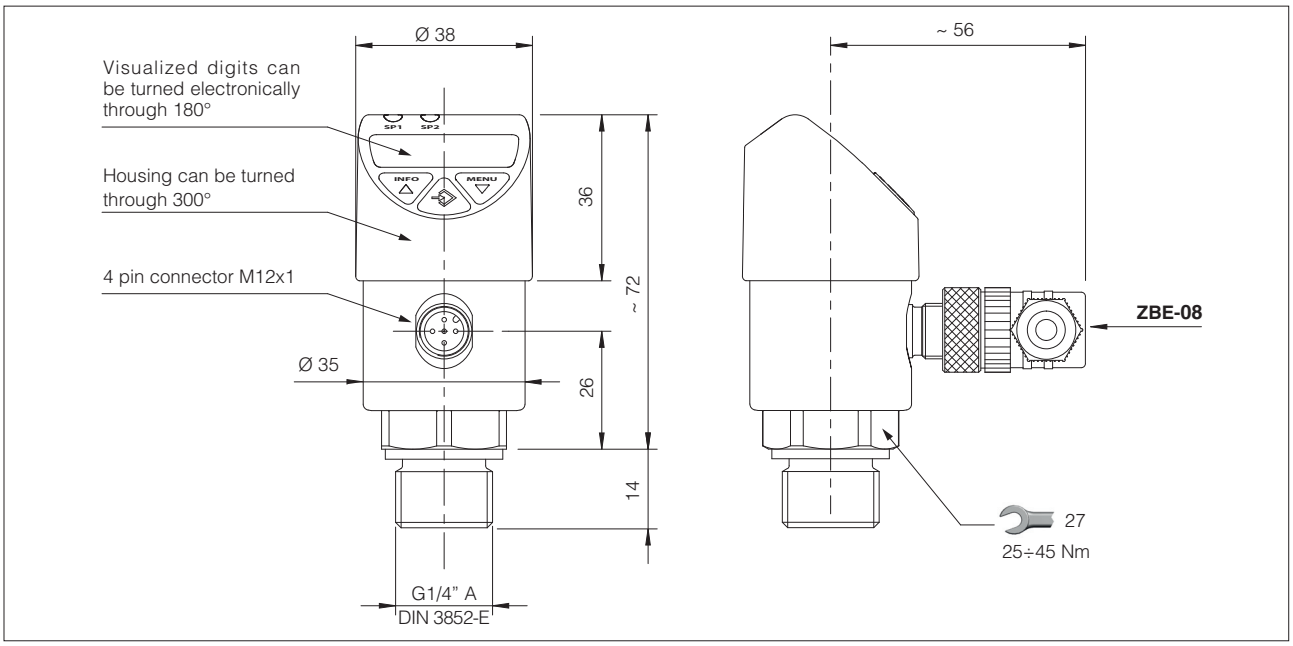

Pressure switches type MAP

with fixed switching pressure differential and microswitch with gold plated contacts

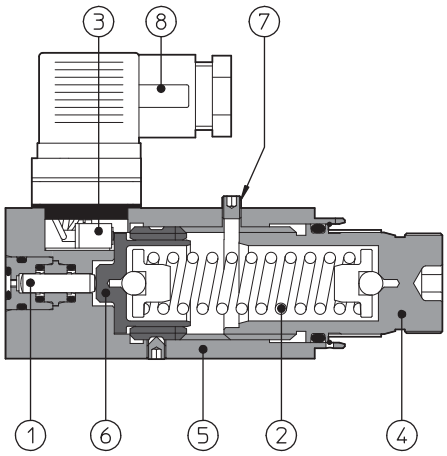

① Servo-piston
② Spring
③ Microswitch with gold plated contacts
④ Adjusting knob with graduated scale
⑤ Body
⑥ Switch actuator
⑦ Adjusting knob locking srew
⑧ Electric connector type 664 (included in the supply)

MAP are hydro-electric pressure switches with fixed switching pressure differential. The mechanical microswitch with gold plated contacts grants high reliability and long life service.

The microswitch changes its status when the pressure in the hydraulic circuit reaches the switching value set on the adjusting knob.The microswitch returns to the original rest position when the pressure in the hydraulic circuit drops below the nominal fixed switching pressure differential (hysteresis). The electric connector provides both NC or NO contacts.
The pressure in the circuit operates the piston ① acting against the adjustable spring ②; once the pressure setting is reached, the piston ⑥ actuates the microswitch ③.
The pressure switching value is selectable by a graduated adjusting knob ④.

Clockwise rotation increases the setting pressure.

Max pressure: **630 bar**

1 MODEL CODE

MAP	-	160	/	E	**	/	*
Fixed differential pressure switch					Series number		Seals material, see section 2: **-** = NBR **PE** = FKM **BT** = HNBR

Pressure range:
40 = 5 ÷ 40 bar
80 = 7 ÷ 80 bar
160 = 10 ÷ 160 bar
320 = 30 ÷ 320 bar
630 = 50 ÷ 630 bar

Options:
E = Common electric contact connected to pin 1, see section 3

2 MAIN CHARACTERISTICS, SEALS AND HYDRAULIC FLUID - for other fluids not included in below table, consult our technical office

Assembly position / location	Any position		
Subplate surface finishing	Roughness index Ra 0,4 - flatness ratio 0,01/100 (ISO 1101)		
Compliance	CE to Low Voltage Directive 2014/35/EU RoHS Directive 2011/65/EU as last update by 2015/65/EU REACH Regulation (EC) n°1907/2006		
Ambient temperature	**Standard** = -30°C ÷ +70°C **/PE** option = -20°C ÷ +70°C **/BT** option = -40°C ÷ +70°C		
Seals, recommended fluid temperature	NBR seals (standard) = -20°C ÷ +60°C, with HFC hydraulic fluids = -20°C ÷ +50°C FKM seals (/PE option)= -20°C ÷ +80°C HNBR seals (/BT option)= -40°C ÷ +60°C, with HFC hydraulic fluids = -40°C ÷ +50°C		
Recommended viscosity	15÷100 mm²/s - max allowed range 2.8 ÷ 500 mm²/s		
Fluid contamination class	ISO 4406 class 21/19/16 NAS 1638 class 10, in line filters of 25 µm (β25 ≥75 recommended)		
Hydraulic fluid	**Suitable seals type**	**Classification**	**Ref. Standard**
Mineral oils	NBR, FKM, HNBR	HL, HLP, HLPD, HVLP, HVLPD	DIN 51524
Flame resistant without water	FKM	HFDU, HFDR	ISO 12922
Flame resistant with water	NBR, HNBR	HFC	

3 CHARACTERISTICS AND WIRING OF INTERNAL MICROSWITCH

	Supply voltage [V]					Rest position	Pressure operated position
	125 AC	**250 AC**	**30 DC**	**250 DC**			
Max current resistive load [A]	7	5	5	0,2	**STD**	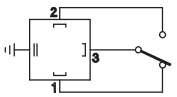	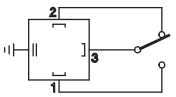
Max current inductive load (Cos φ = 0,4) [A]	4	2	3	0,02			
Insulating resistance	100 MΩ				**/E**	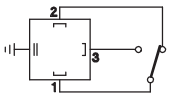	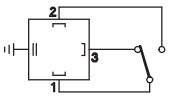
Contact resistance	15 mΩ						
Electrical life-expectancy	1.000.000 switchings						
Mechanical life-expectancy	10.000.000switchings						

4 DIAGRAMS

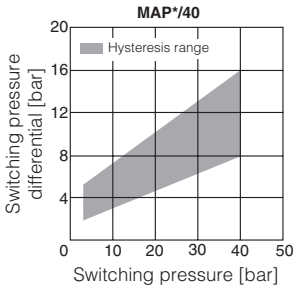

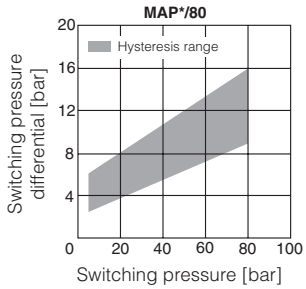

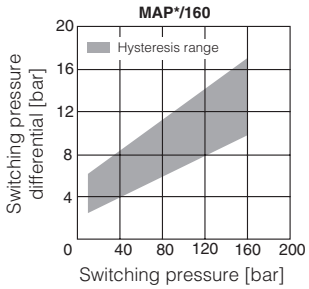

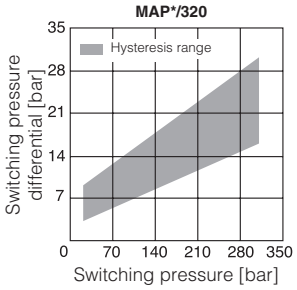

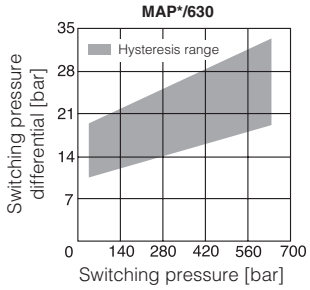

The diagrams show, the switching pressure difference (hysteresis) between the switching positions of the pressure switch electric contacts.

⚠ The switching pressure differential may increased depending to the deterioration of the fluid contamination class.

5 DIMENSIONS OF MAP WITHOUT ADAPTORS [mm]

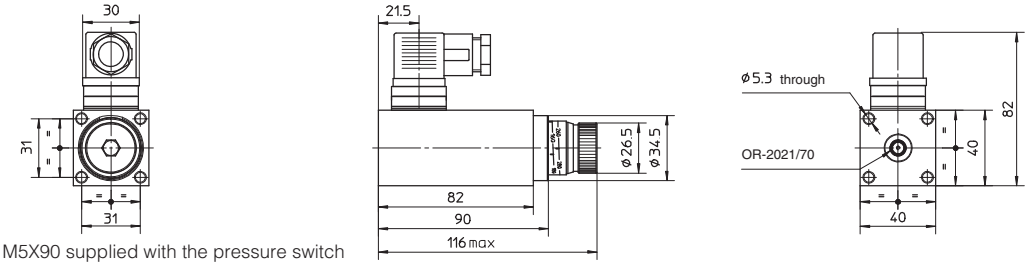

Fastening bolts:
4 socket head screws M5X90 supplied with the pressure switch

6 MODEL CODE FOR ADAPTORS WHEN SUPPLIED SEPARATELY - BHM and BKM with option **/PE** or **/BT** are available on request

BHM	–	**

Type of adaptor
BMM = male
BMF = female
BFM = in-line
BHM = ISO 4401 size 06
BKM = ISO 4401 size 10

Threated connections for BMM and BFM adaptors, see section 7

06 = G 1/4" (BMM, BMF, BFM)
10 = G 3/8" (BMM, BFM)
15 = G 1/2" (BMM, BFM)
20 = G 3/4" (BFM)
25 = G 1" (BFM)
32 = G 1 1/4"(BFM)

BHM and BKM adaptors, see section 7

11 = port P
12 = port A and B
13 = port A
14 = port B
17 = port P and A
18 = port P and B

7 DIMENSIONS OF ADAPTORS [mm]

BMM - Male fittings:

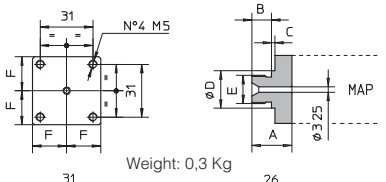

Weight: 0,3 Kg

BMF - Female fittings:

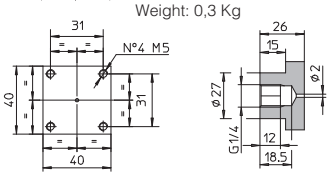

	A	B	C	Ø D	E	F
BMM-06	22,5	11	1,5	18	G 1/4"	20
BMM-10	23,5	11,5	2	22	G 3/8"	20
BMM-15	27,5	15	2,5	26	G 1/2"	20

BFM - In-line mounting:

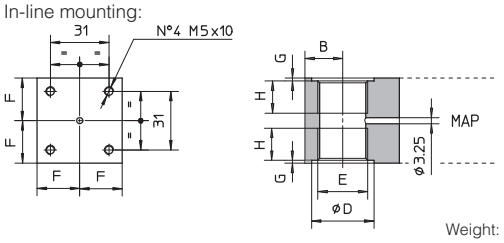

Weight: 0,8 Kg

	A	B	Ø D	E	F	G	H
BFM-06	50	20	19	G 1/4"	22,5	1	12
BFM-10	50	20	23	G 3/8"	22,5	1	12
BFM-15	50	20	27	G 1/2"	22,5	1	15
BFM-20	50	20	33	G 3/4"	22,5	1,5	17
BFM-25	70	30	40	G 1"	30	1,5	19
BFM-32	70	30	50	G 1 1/4"	30	1,5	22

BHM - Modular mounting surface ISO 4401-03-02-0-05

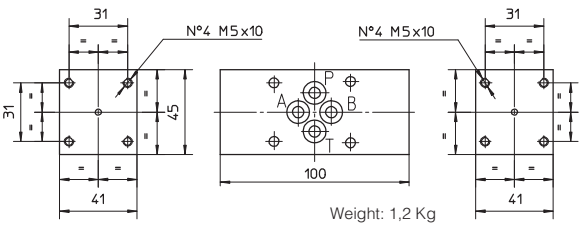

Weight: 1,2 Kg

BKM - Modular mounting surface ISO 4401-05-03-0-05

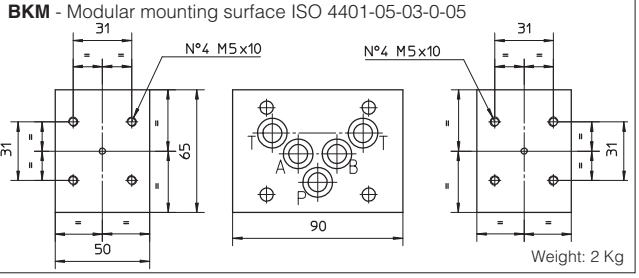

Weight: 2 Kg

For versions 11 and 13 the pressure switch is mounted on side of port A. For version 14 the pressure switch is mounted on side of port B. For versions 12, 17, 18 the pressure switch is mounted on both sides.

Mounting subplates type BA

single, for ISO valves size 06 to 32

BA-* are single subplates with ISO mounting surface for installation of Atos valves and they are provided with threaded ports for connectios to pressure, tank and users lines. They are characterized by low pressure drops and they are specific for directional, flow and pressure control valves ISO size 06, 10, 16, 20, 25 and 32;
Special subplates or manifolds for customized applications are available upon request.
The set of screws for the valve installation on the BA subplate must be ordered separately, see the code SET SC-* specified in the following sections.

1 TECHNICAL CHARACTERISTICS

Installation position	Any position
Operating pressure	Ports P, T, A, B = 350 bar See technical table of the valves to be assembled
Ambient temperature range	-30°C ÷ +70°C
Fluid	Hydraulic oil as per DIN 51524...535, for other fluids contact our technical office
Recommended viscosity	15÷100 mm2/s - max allowed range: see the technical table of the valves to be assembled
Max fluid contamination level	See technical table of the valves to be assembled and filter section at www.atos.com or KTF catalog
Fluid temperature	See technical table of the valves to be assembled
Surface protection	zinc coating with black passivation
Corrosion resistance	Salt spray test (EN ISO 9227) > 200 h
Compliance	RoHS Directive 2011/65/EU as last update by 2015/863/EU REACH Regulation (EC) n°1907/2006

2 SINGLE STATION SUBPLATES FOR VALVES SIZE 06

ISO 4401:2005
Mounting surface: 4401-03-03-0-05

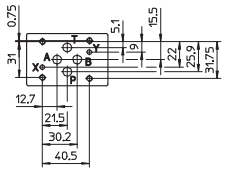

Matching valves	Set of screw (to be ordered separately)
DH-00, DH-01	SET SC-DHZ
DH-02, DH-04	SET SC-DHZ
DH-05, DH-08	SET SC-DHZ
DH-09	SET SC-DHZ
DHA, DHW	SET SC-DHZ
DHE, DHL	SET SC-DH
DHQ	SET SC-DHZ
DLEH, DLEHM	SET SC-DH
DLAH, DLAHM	SET SC-DHZ
DLWH	SET SC-DHZ
QV-06	SET SC-QV
RZMO, RZMA	SET SC-DHZ
RZME	SET SC-DH
RZGO, RZGA	SET SC-DHZ
RZGE	SET SC-DH
DHZO, DHZA	SET SC-DHZ
DHZE, DHRZE	SET SC-DH
DLHZO, DLHZA	SET SC-DHZ
QVHZO-*-06	SET SC-DHZ
QVHZA	SET SC-DHZ

BA-202

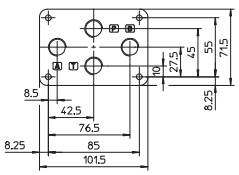

BA-204

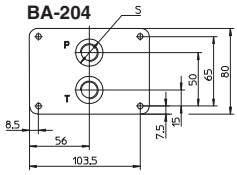

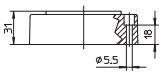

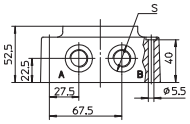

BA-302/Y

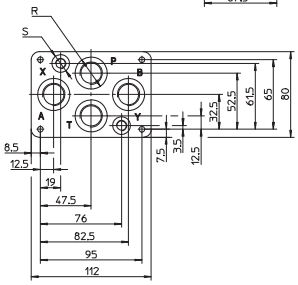

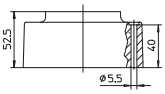

VERSIONS

BA-202: basic version without ports X and Y; ports P, A, B, T (3/8") on the base.

BA-204: basic version without ports X and Y; ports P and T (3/8") on the base; ports A and B (3/8") on the side.

BA-302: basic version without ports X and Y; ports P, A, B, T (1/2") on the base.

BA-302/Y: version dimensionally identical to the corresponding basic version with the addition of X and Y ports (1/8") on the base (see figure on the left).
The /Y version is always used for DHZO and DLHZO valves when drain from port Y is required.

X and Y ports are only present in the /Y versions.

Code	Ports (GAS) A,B,P,T	(X-Y)	Ø Counterbore S [mm]	R [mm]	Mass [Kg]
BA-202	3/8"	–	–	–	1,2
BA-204	3/8"	–	25,5	16,5	1,8
BA-302 (/Y)	1/2"	(1/8")	30	16,5	1,8

3 SINGLE STATION SUBPLATES FOR VALVES SIZE 10

ISO 4401:2005
Mounting surface: 4401-05-05-0-05

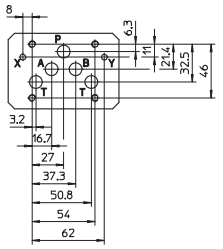

Matching valves	Set of screw (to be ordered separately)
DK-11	SET SC-DK/DP-1
DK-12	SET SC-DK/DP-1
DKE, DKEP	SET SC-DK/DP-1
DKZOR	SET SC-DK/DP-1
DKZA	SET SC-DK/DP-1
DLKZOR	SET SC-DK/DP-1
DLKZA	SET SC-DK/DP-1
DKA/MA	SET SC-DK/DP-1
DP-11	SET SC-DK/DP-1
DP-14	SET SC-DK/DP-1
DP-15	SET SC-DK/DP-1
DPH-18	SET SC-DK/DP-1
DPH-19	SET SC-DK/DP-1
DPHL-1	SET SC-DK/DP-1
DPHE-1	SET SC-DK/DP-1
DPHA-1	SET SC-DK/DP-1
DPHW-1	SET SC-DK/DP-1
DPZO-*-1	SET SC-DK/DP-1
DPZE-*-1	SET SC-DK/DP-1
DPZA-*-1	SET SC-DK/DP-1

BA-308/Y

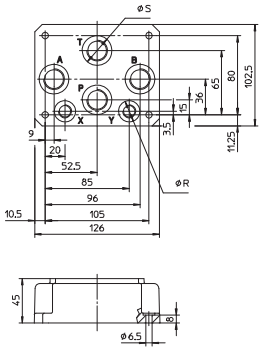

BA-428/Y

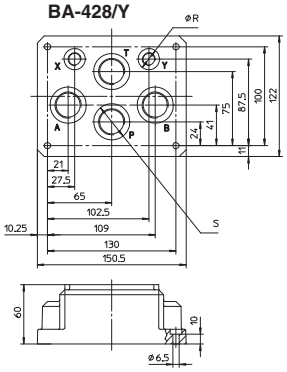

BA-434/Y

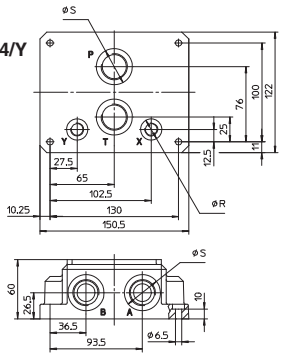

VERSIONS

BA-308: basic version without ports X and Y; ports P, A, B, T (1/2") on the base.

BA-428: basic version without ports X and Y; ports P, A, B, T (3/4") on the base.

BA-434: basic version without ports X and Y; ports P and T (3/4") on the base; ports A and B (3/4") on the side.

BA-*/Y**: versions dimensionally analogous to the corresponding basic versions with the addition of X and Y ports (1/4") on the base (see figure on the left).
The /Y versions are always used for valves type DKZOR, DLKZO, when drainage from port Y is required.

X and Y ports are only present in the /Y versions.

Code	Ports (GAS) A,B,P,T	(X-Y)	Ø Counterbore S [mm]	R [mm]	Mass [Kg]
BA- 308 (/Y)	1/2"	(1/4")	30	21,5	2,5
BA- 428 (/Y)	3/4"	(1/4")	36,5	21,5	5,5
BA- 434 (/Y)	3/4"	(1/4")	36,5	21,5	8,5

4 SINGLE STATION SUBPLATES FOR VALVES SIZE 16

ISO 4401:2005
Mounting surface: 4401-07-07-0-05

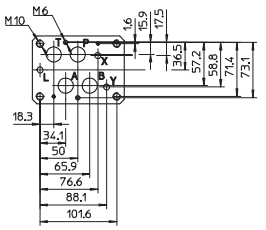

Matching valves	Set of screw (to be ordered separately)
DP-21	SET SC-DP2
DP-24	SET SC-DP2
DP-25	SET SC-DP2
DPH-28	SET SC-DP2
DPH-29	SET SC-DP2
DPHL-2	SET SC-DP2
DPHE-2	SET SC-DP2
DPHA-2	SET SC-DP2
DPHW-2	SET SC-DP2
DPZO-*-2	SET SC-DP2
DPZE-*-2	SET SC-DP2
DPZA-*-2	SET SC-DP2

BA-518

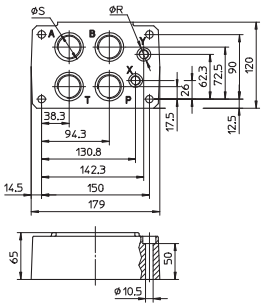

BA-519

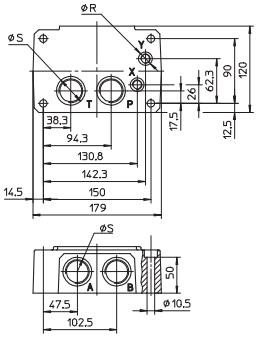

VERSIONS

BA-518: basic version with ports P, A, B, T (1") and X, Y (1/4") on the base.

BA-519: basic version with ports P, T (1") and X, Y (1/4") on the base; ports A, B (1") on the side.

Code	Ports (GAS) A,B,P,T	X-Y	Ø Counterbore S [mm]	R [mm]	Mass [Kg]
BA-518	1"	1/4"	46	21,5	8
BA-519	1"	1/4"	46	21,5	8

5 SINGLE STATION SUBPLATES FOR VALVES SIZE 25

ISO 4401:2005
Mounting surface: 4401-08-08-0-05

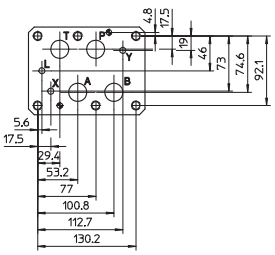

Matching valves	Set of screw (to be ordered separately)
DP-41	SET SC-DP4
DP-44	SET SC-DP4
DP-45	SET SC-DP4
DPH-48	SET SC-DP4
DPH-49	SET SC-DP4
DPHL-4	SET SC-DP4
DPHE-4	SET SC-DP4
DPHA-4	SET SC-DP4
DPHW-4	SET SC-DP4
DPZO-*-4	SET SC-DP4
DPZE-*-4	SET SC-DP4
DPZA-*-4	SET SC-DP4

BA-509

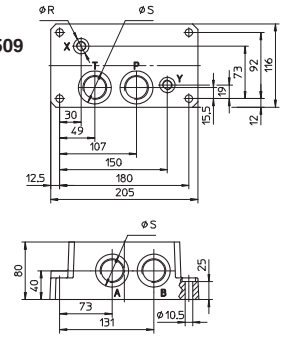

BA-618

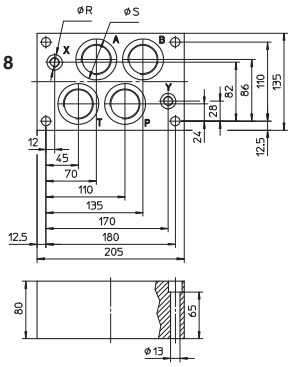

VERSIONS

BA-509: basic version with ports P, T (1") and X, Y (1/4") on the base, ports A, B (1") on the side.

BA-618: basic version with ports P, A, B, T (1 1/4") and X, Y (1/4") on the base.

Code	Ports (GAS) A,B,P,T	Ports (GAS) X-Y	Ø Counterbore S [mm]	Ø Counterbore R [mm]	Mass [Kg]
BA-509	1"	1/4"	46	21,5	12,5
BA-618	1 1/4"	1/4"	57	21,5	13,5

6 SINGLE STATION SUBPLATES FOR VALVES SIZE 32

ISO 4401:2005
Mounting surface: 4401-10-09-0-05

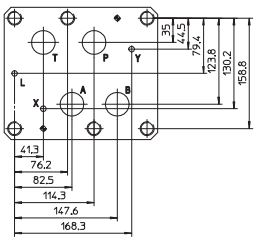

Matching valves	Set of screw (to be ordered separately)
DP-64	SET SC-DP6
DP-65	SET SC-DP6
DPH-68	SET SC-DP6
DPH-69	SET SC-DP6
DPHL-6	SET SC-DP6
DPHE-6	SET SC-DP6
DPHA-6	SET SC-DP6
DPZO-*-6	SET SC-DP6
DPZE-*-6	SET SC-DP6
DPZA-*-6	SET SC-DP6

BA-708

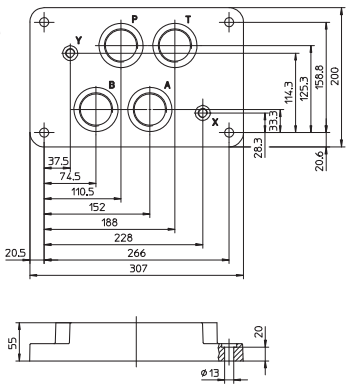

VERSIONS

BA-708: basic version with ports P, A, B, T
(1 1/2") and X, Y (1/4") on the base.

Code	Ports (GAS) A,B,P,T	Ports (GAS) X-Y	Ø Counterbore S [mm]	Ø Counterbore R [mm]	Mass [Kg]
BA-708	1 1/2"	1/4"	63,5	21,5	17

7 SINGLE STATION SUBPLATES FOR PRESSURE CONTROL VALVE SIZE 10, 20 AND 32

Mounting surface
ISO 6264: 1998

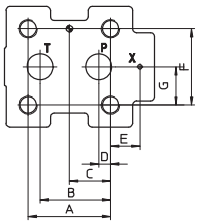

Matching valves Set of screw
to be ordered separately

AGAM-10	SET SC-AGA-10
AGMZO-10	SET SC-AGA-10
AGMZE-10	SET SC-AGA-10
AGMZA-10	SET SC-AGA-10
AGAM-20	SET SC-AGA-20
AGMZO-20	SET SC-AGA-20
AGMZE-20	SET SC-AGA-20
AGMZA-20	SET SC-AGA-20
AGAM-32	SET SC-AGA-32
AGMZO-32	SET SC-AGA-32
AGMZE-32	SET SC-AGA-32
AGMZA-32	SET SC-AGA-32

size	A	B	C	D	E	F	G
10	53,8	47,5	22,1	22,1	-	53,8	26,9
20	66,7	55,6	33,4	11,1	23,8	70	35
32	88,9	76,2	44,5	12,7	31,8	82,6	41,3

BA-306
Mounting surface
ISO 6264-06-09-0-97
matching valves:
AGAM-10
AGMZO-⁎-10
AGMZA-⁎-10

BA-506
Mounting surface
ISO 6264-08-13-0-97
matching valves:
AGAM-20
AGMZO-⁎-20
AGMZA-⁎-20

BA-706
Mounting surface
ISO 6264-10-17-0-97
matching valves:
AGAM-32
AGMZO-⁎-32
AGMZA-⁎-32

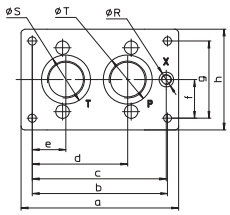

BA-306
BA-506
BA-706

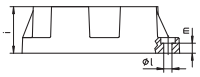

Code	a	b	c	d	e	f	g	h	i	l	m	Ø Blade S	R	T
BA - 306	130	104	97	64,5	19,5	27	54	80	40	8,4	15	36,5	21,5	30
BA - 506	180	150	133,25	92,25	37,25	37,5	75	105	50	10,5	13	46	21,5	46
BA - 706	204	175	173,5	123,5	43,5	50	100	130,5	60	10,5	13	63,5	21,5	63,5

VERSIONS

BA-306, BA-506, BA-706: basic version, see figure on left and dimensional tables.

Code	size	Ports (GAS) P	T	X	Mass [Kg]
BA - 306	10	1/2"	3/4"	1/4"	1,5
BA - 506	20	1"	1"	1/4"	3,5
BA - 706	32	1 1/2"	1 1/2"	1/4"	6

Mounting surface
ISO 5781: 2000

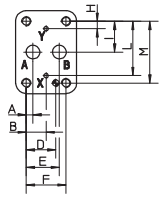

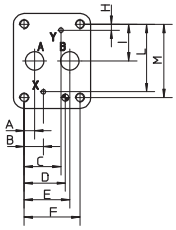

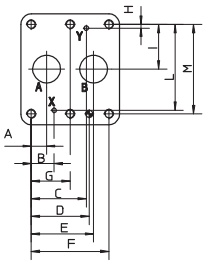

Matching valves Set of screw
to be ordered separately

AGI*-10(20)	SET SC-AGI
AGRL(E)-10(20)	SET SC-AGI
AGRCZO-10(20)	SET SC-AGI
AGRCZE-10(20)	SET SC-AGI
AGRCZA-10(20)	SET SC-AGI
AGI*-32	SET SC-AGI-32
AGRL(E)-32	SET SC-AGRL-32

Mounting surface
ISO 5781-06-07-0-00
matching valves:
AGI*-10
AGRL-10
AGRLE-10
AGRZO-⁎-10

Mounting surface
ISO 5781-08-10-0-00
matching valves:
AGI*-20
AGRL-20
AGRLE-20
AGRZO-⁎-20

Mounting surface
ISO 5781-10-13-0-00
matching valves:
AGI*-32
AGRL-32
AGRLE-32

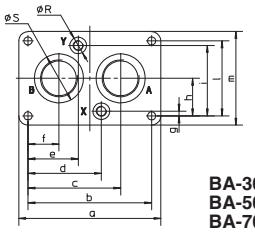

BA-305
BA-505
BA-705

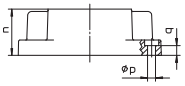

Code	a	b	c	d	e	f	g	h	i	l	m	n	p	q	Ø Blade S	R
BA - 305	113	90	67	45	45	23	8	33,3	58,7	66,7	90	30	10,5	10	30	21,5
BA - 505	133	110	82,5	64,5	45,5	27,5	6,4	39,7	73	79,4	102,5	42	10,5	10	46	21,5
BA - 705	184	160	120	95	65	40	6	48,5	91	97	121	60	10,5	13	63,5	21,5

VERSIONS

BA-305, BA-506 and **BA-705**:see figure on left and dimensional tables.

Code	size	Ports (GAS) A	B	X-Y	Mass [Kg]
BA - 305	10	1/2"	1/2"	1/4"	1
BA - 505	20	1"	1"	1/4"	2
BA - 705	32	1 1/2"	1 1/2"	1/4"	7,5

Auxiliary hand levers for solenoid valves

direct operated on-off and proportional, ISO 4401 size 06

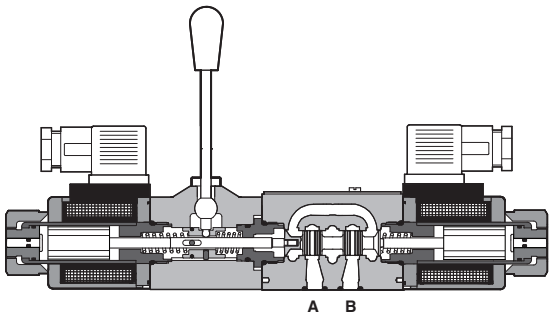

DHE-0711/MV

Auxiliary hand levers for direct operated on-off solenoid valves size 06, type DHE, DHL, DHA and proportional valves size 06, type DHZO, DHZE, DHZA and QVHZO.

This option allows to operate the valves in absence of electrical power supply, i.e. during commissioning, maintenance or in case of emergency.

It is available with two different configurations depending to the installation requirements:
MV = lever positioned vertically (perpendicular to the valve axis)
MO = lever positioned horizontally (parallel to the valve axis)

When the valve is electrically operated the hand lever remains stopped in its rest position

The hand lever execution does not affect the performances of the original valves.

1 MODEL CODE FOR ON-OFF DIRECTIONAL VALVES (for the details, see indicated tech. table)

DHE - 0	63	1/2 / MV	- X	24 DC	**	/*

Directional control valves size 06
DHE-0 = for AC and DC supply, high performances, with **cURus** certified solenoids - see table E015
DHL-0 = for AC and DC supply - see table E018
DHA-0 = ex-proof - see table EX010

Valve configuration: **61 - 63 - 71**

Available spools: **0 - 0/2 - 1 - 1P - 1/2 - 1/2P - 3 - 3P - 4 - 7**

Options, hand lever configuration:
MO = horizontal hand lever (not for DHA)
MV = vertical hand lever
AMO = horizontal hand lever installed at the side of port B (not for DHA)
AMV = vertical hand lever installed at the side of port B

Series number

Seals material:
- = NBR
PE = FKM
BT = HNBR **(1)**

Voltage code: see relevant tech. table

Only for DHE and DHL:
00-AC = AC solenoids without coils
00-DC = DC solenoids without coils
X = without connector

(1) Not available for DHL

2 MODEL CODE FOR PROPORTIONAL DIRECTIONAL VALVES AND FLOW CONTROL VALVES (for the details, see indicated tech.table)

DHZO	- A	- 0	71	- S5 / MV	/*	**	/*

Directional proportional valves size 06
DHZO = see table F160
DHZE = see table F150
DHZA = ex-proof - see table FX010

Flow control valves size 06
QVHZO = see tab F410

A = without position transducer

Valve size
0 = ISO 4401 size 06 (for DHZ*)
06 = ISO 4401 size 06 (for QVHZO)

Valve configuration (only DHZ*): **51, 53, 71, 73**

Options:
MO = horizontal hand lever (not for DHA, DHZA)
MV = vertical hand lever
BMO = horizontal hand lever installed at the side of port A (not for DHZA, QVHZO)
BMV = vertical hand lever installed at the side of port A (not for QVHZO)
O = Horizontal cable entrance (only for DHZA)
Y = External drain (only for DHZA, DHZO)

Spool size (for DHZ*): **S3 - S5 - D3 - D5 - L3 - L5**
Max regulated flow (for QVHZO): **3-12-18-36-45** l/min

Series number

Seals material:
- = NBR
PE = FKM
BT = HNBR

Coil option: see relevant tech. table

3 LEVER CHARACTERISTICS

Total angle stroke	[°deg]	± 28°	Lever actuating force	[N]	1 ÷ 8
Working angle stroke	[°deg]	± 15°	Lever device weight	[g]	880

4 INSTALLATION DIMENSIONS [mm]

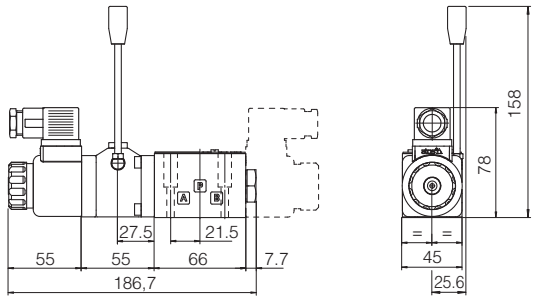

DHL-06*/MV Mass: 2,4 kg (single solenoid)
DHL-07*/MV (dotted line) Mass: 2,7 kg (double solenoid)

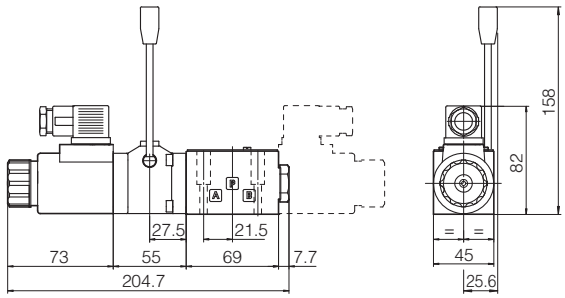

DHE-06*/MV Mass: 2,7 kg (single solenoid)
DHE-07*/MV (dotted line) Mass: 3,0 kg (double solenoid)

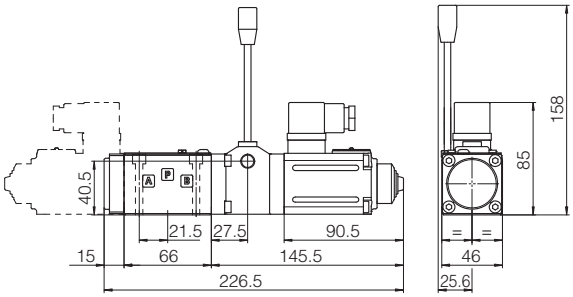

DHZO-A-05*/MV Mass: 2,8 kg (single solenoid)
DHZO-A-07*/MV (dotted line) Mass: 3,5 kg (double solenoid)

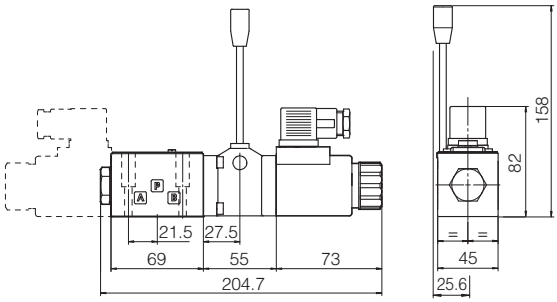

DHZE-05*/MV Mass: 2,7 kg (single solenoid)
DHZE-07*/MV (dotted line) Mass: 3,0 kg (double solenoid)

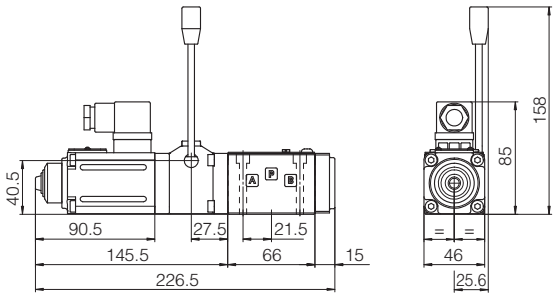

QVHZO-A-06*/MV Mass: 3,2 kg

Horizontal hand lever device
/MO, /AMO

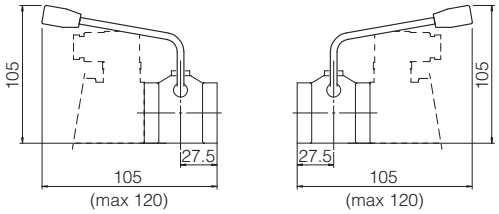

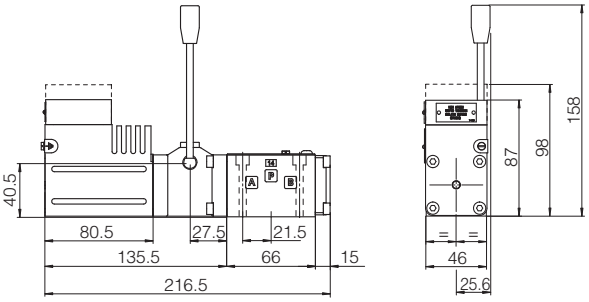

DHA/*-06*/MV Mass: 3,4 kg
DHA/UL-*-06*/MV (dotted line)

Note: see tech. table FX010 for DHA/MV models

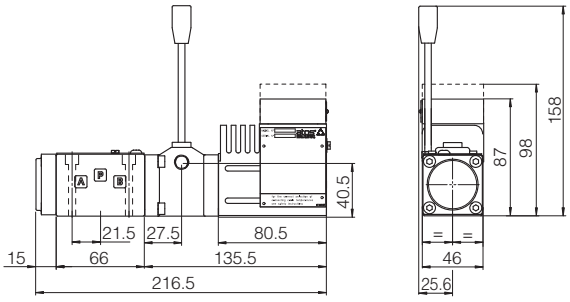

DHZA/*-06*/MV Mass: 3,4 kg
DHZA/UL-*-06*/MV (dotted line)

Note: see tech. table FX100 for DHZA/MV models

Handwheels for hydraulic controls

on-off and proportional valves

	OPTIONS CODES AND DIMENSIONS	FEATURES	VALVE TYPE
OPTION	**/V** 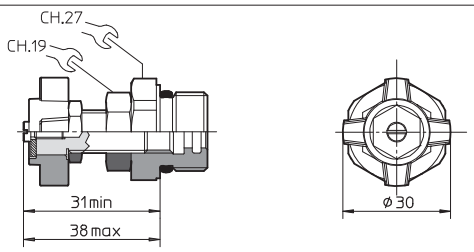	Regulating handwheel	ARE, CART ARE, CART M-6, ARAM, AGAM, REM, AGIR, AGIS, AGIU, HMP, HM, KM, HS, KS, HG, KG, LIMM, LIRA, LICM
OPTION	**/VF** 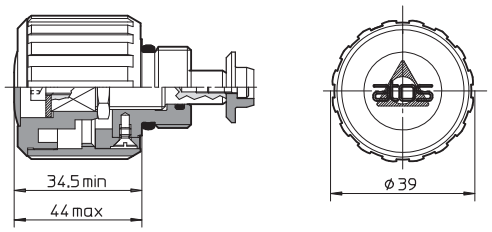	Regulating knob	ARE, CART ARE, CART M-6, AGIS, AGIU (as spare part, code VFG instead of VF and VSG instead of VS), HMP, HS, HG.
OPTION	**VS** 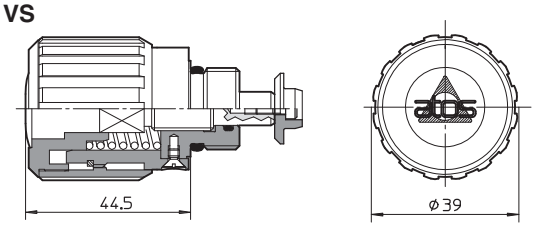	Manual override with safety locking. Regulation possible only with pushed knob.	
OPTION	**/WP** 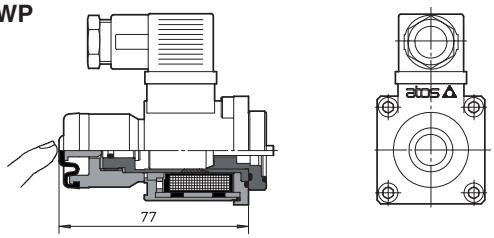	Prolonged manual override protected by rubber cap	DHI, DHE DKE DLEH, DLEHM DPHI, DPHE LID*
SPARE PART	**WPD/HL** 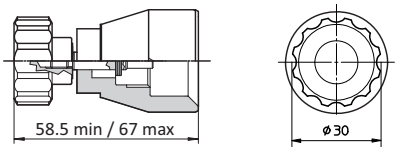	Manual override with detent, for mechanical operation and fixed actuation of spools	DHL (only DC version)
SPARE PART	**WPD/H** 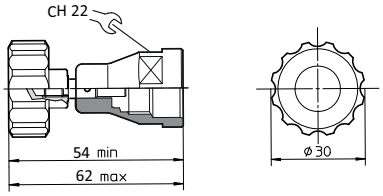		DHI
SPARE PART	**WPD/HE-DC** 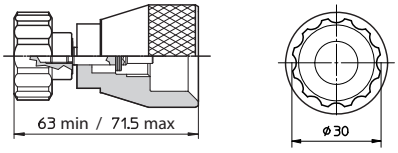		DHE (only DC version)

	OPTIONS CODES AND DIMENSIONS	FEATURES	VALVE TYPE
SPARE PART	**WPD/KE-DC** 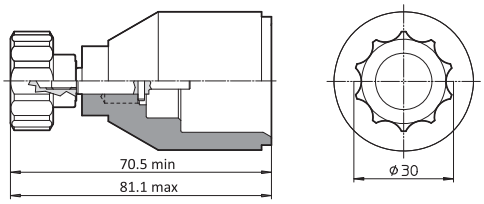	Manual override with detent, for mechanical operation and fixed actuation of spools	DKE-DC
SPARE PART	**WPD/Z** 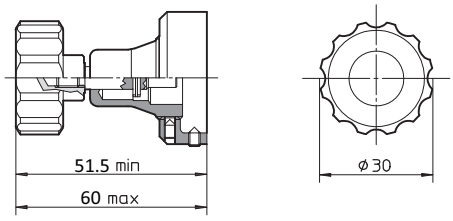	Manual override with detent, for mechanical operation and fixed actuation of spools. Only for open-loop valves.	DHZO, DKZOR, DPZO, QVHZO, QVKZOR
OPTION	**/K** 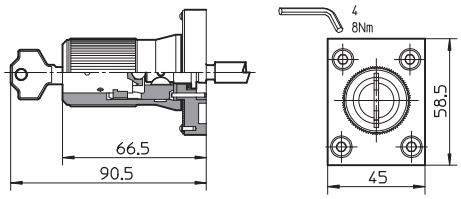	Lock key for the setting knob	DHQ, DKQ QV-06,
OPTION	**/G** 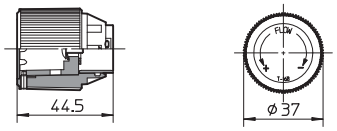	Adjustment by graduated micrometer	HQ, KQ, JPQ-2
OPTION	**/G** 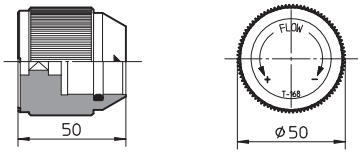		JPQ-3

Electric and electronic connectors

for transducers, on/off and proportional valves, pumps

1 CONNECTORS FOR ON/OFF VALVES AND PUMPS

CODE AND DIMENSIONS	APPLICATION	INTERNAL VIEW PINOUT (1)	FRONT VIEW	CABLE GLAND Ø CABLE	REFERENCE RULES
345 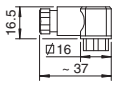	Female plastic connector - 4 pin: - inductive proximity sensor, /FI option for DHI, DHE			PG7 ø 4 ÷ 6 mm	DIN EN 61984 (VDE 0627) Protection degree IP 65 EN 60529
664 **666** (black) **666/A** (grey) **667-24** **667-110** **667-220** 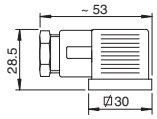	Female plastic connector - 4 pin: - pressure switch type MAP - inductive proximity sensor, /FI option for DKE-17* Female plastic connector - 3 pin: - standard coil connector for on/off valves - inductive proximity sensor, /FI option for DKE-16* Female plastic connector - 3 pin: - standard coil connector for on/off valves with built-in led	**664** **666** **667-***	 	PG11 ø 8 ÷ 10 mm	DIN 43650-A/ISO 4400 Protection degree IP 65 EN 60529
ZBE-06 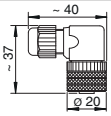	Female plastic connector - 4 pin: - inductive position switch, /FV option			PG7 ø 2,5 ÷ 6,5 mm	M12 - coding A IEC 61076-2-101 Protection degree IP 67 EN 60529
BKS-B-20-4-03 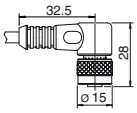	Female plastic connector - 4 pin (3 wire): - inductive proximity sensor for LIFI Cable length: 3 m			Moulded on cable	M12 - coding A IEC 61076-2-101 Protection degree IP 67 EN 60529
669 (black) **669/A** (grey) 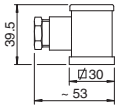	Female plastic connector - 3 pin: - optional electronic connector for on/off valves with built-in rectifier bridge for supplying DC coils by AC current	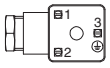		PG11 ø 8 ÷ 10 mm	DIN 43650-A/ISO 4400 Protection degree IP 65 EN 60529

(1) the wiring of electrical terminals has to be made according to specific technical table

2 CONNECTORS FOR PROPORTIONAL VALVES AND PUMPS

CODE AND DIMENSIONS	APPLICATION	INTERNAL VIEW PINOUT (1)	FRONT VIEW	CABLE GLAND Ø CABLE	REFERENCE RULES
345 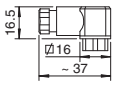	Female plastic connector - 4 pin: - position transducer for ZO(R)-T and ZO-L valves			PG7 ø 4 ÷ 6 mm	Protection degree IP 65 EN 60529
666 (black) 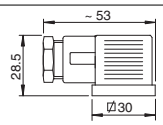	Female plastic connector - 3 pin: - standard coil connector for proportionals valves			PG11 ø 8 ÷ 10 mm	DIN 43650-A/ISO 4400 Protection degree IP 65 EN 60529
STCO9131-6-PG9 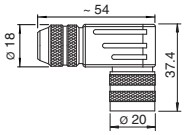	Female metallic connector at 90° - 6 pin: - position transducer for LIQZP-L size 125 cartridges			PG9 ø 6 ÷ 8 mm	Protection degree IP 67 EN 60529
ZM-7P 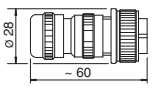	Female metallic connector - 7 pin: - main connector for integral electronic driver	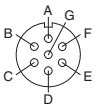		PG11 ø 7 ÷ 9 mm	According to MIL-C-5015 Protection degree IP 67 EN 60529
ZM-12P 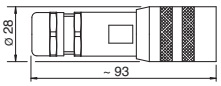	Female metallic connector - 12 pin: - main connector for integral electronic driver			PG13,5 ø 8 ÷ 11 mm	DIN 43651 Protection degree IP 67 EN 60529
ZM-5PF 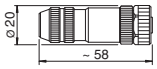	Female metallic connector - 5 pin: - CANbus for integral electronic driver			Pressure nut ø 6 ÷ 8 mm	M12 - coding A IEC 60947-5-2 Protection degree IP 67 EN 60529

ZM-5PM	Male metallic connector - 5 pin: - CANbus for integral electronic driver			Pressure nut ø 6 ÷ 8 mm	M12 - coding A IEC 61076-2-101 Protection degree IP 67 EN 60529
ZM-5PF/BP	Female metallic connector - 5 pin: - PROFIBUS DP for integral electronic driver			Pressure nut ø 6 ÷ 8 mm	M12 - coding B IEC 61076-2-101 Protection degree IP 67 EN 60529
ZM-5PM/BP	Male metallic connector - 5 pin: - PROFIBUS DP for integral electronic driver			Pressure nut ø 6 ÷ 8 mm	M12 - coding B IEC 61076-2-101 Protection degree IP 67 EN 60529
ZM-4PM/E	Male metallic connector - 4 pin: - EtherCAT, POWERLINK, EtherNet/IP, PROFINET RT/IRT for integral electronic driver			Pressure nut ø 6 ÷ 8 mm	M12 - coding D IEC 61076-2-101 Protection degree IP 67 EN 60529
ZH-5PM/1.5 **ZH-5PM/5**	Male plastic connector - 5 pin - single pressure/force transducer - analog position transducer Cable length: 1.5 m or 5 m			Moulded on cable	M12 - coding A IEC 61076-2-101 Protection degree IP 67 EN 60529
ZH-5PM-2/2	Male plastic connector - 4 pin: - double pressure/force transducers Splitting cable length: 2 m			Moulded on cable	M12 - coding A IEC 61076-2-101 Protection degree IP 67 EN 60529
ZH-8PM/5 **ZH-8PM/10**	Male plastic connector - 8 pin: - digital position transducer Cable length: 5 m or 10 m			Moulded on cable	M12 - coding A IEC 61076-2-101 Protection degree IP 67 EN 60529
ZBE-06	Female plastic connector - 4 pin: - position transducer (LIQZO-T* size 50) - integral pressure transducer (TERS)			PG7 ø 2,5 ÷ 6,5 mm	M12 - coding A IEC 61076-2-101 Protection degree IP 67 EN 60529
ZBE-08	Female plastic connector - 5 pin: - position transducer E-THT-15 (LIQZP)			PG7 ø 2,5 ÷ 6,5 mm	M12 - coding A IEC 61076-2-101 Protection degree IP 67 EN 60529
ZH-7P	Female plastic reinforced with fiber glass connector - 7 pin: - main connector for integral electronic driver			PG11 ø 8 ÷ 10 mm	According to MIL-C-5015 Protection degree IP 67 EN 60529
ZH-12P	Female plastic reinforced with fiber glass connector - 12 pin: - main connector for integral electronic driver			PG16 ø 6 mm x 2 cable	DIN 43651 Protection degree IP 67 EN 60529
ZH-5P	Female plastic connector - 5 pin: - RS232 Serial, CANbus - digital electronic driver E-MI-AS-IR, /M12 option			PG9 ø 6 ÷ 8 mm	M12 - coding A IEC 61076-2-101 Protection degree IP 67 EN 60529
ZH-5P/BP	Male plastic connector - 5 pin: - PROFIBUS DP			PG9 ø 6 ÷ 8 mm	M12 - coding B IEC 61076-2-101 Protection degree IP 67 EN 60529
ZH-5PM	Male plastic connector - 5 pin: - pressure, force, position transducers (TEZ/LEZ series 10 or lower)			PG7 ø 4 ÷ 6 mm	M12 - coding A IEC 61076-2-101 Protection degree IP 67 EN 60529

(1) the wiring of electrical terminals has to be realized according to specific technical table

3 CONNECTOR FOR PRESSURE TRANSDUCERS AND PRESSURE SWITCHES

CODE AND DIMENSIONS	APPLICATION	INTERNAL VIEW PINOUT (1)	FRONT VIEW	CABLE GLAND Ø CABLE	REFERENCE RULES
ZBE-08	Female plastic connector - 5 pin: - pressure transducer E-ATR8 - electronic pressure switch type E-DAP-2			PG7 ø 2,5 ÷ 6,5 mm	M12 - coding A IEC 61076-2-101 Protection degree IP 67 EN 60529

(1) the wiring of electrical terminals has to be made according to specific technical table

5 GENERAL INFORMATION

INDEX

GENERAL INFORMATION

TECHNICAL INFORMATION	Table	Pag
Basics for digital proportionals electrohydraulics	FS001	930
Basics for on-off solenoid directional valves	E001	934
Basics for safety components	Y010	936
Programming tools for valve drivers & axis controls	GS500	941
Fieldbus features	GS510	949
IO-Link features	GS520	956
Mounting surfaces for electrohydraulic valves	P005	958
Mounting surfaces and cavities for cartridge valves	P006	962

OPERATING INFORMATION		
Operating and maintenance information for proportional valves	FS900	968
Operating and maintenance information for on-off valves	E900	976
Operating and maintenance information for safety PED pressure relief valves	CY900	982

Basics for digital proportional electrohydraulics

Digital electrohydraulics enables new functionalities within the conventional control architectures and represents the fundamental premise to realize machines with high technological contents.
The digital electronics integrates several logic and control functions (distributed intelligence) and allows the introduction into the hydraulic system of the most modern fieldbus communication networks.

The integration of advanced digital technologies into Atos proportional valves brings important advantages and innovative features:
- better performances of electrohydraulic components: hysteresis, response time, linearity, repeatability, valve to valve riproducibility
- numerical software setting of hydraulic parameters (scale, bias, ramp, compensation of non-linearities) for full valve to valve riproducibility
- advanced diagnostics (alarms history, built-in oscilloscope function) and computer assisted maintenance
- industry 4.0 connectivity through direct interfacing with fieldbus networks

Atos digital components range includes:
- proportional valves and drivers, see sections 1 and 2
- proportional p/Q pumps, see 4.3
- axis controls and servoactuators, see section 5

1 PROPORTIONAL VALVES CONFIGURATION

PERFORMANCES →

VALVES / DRIVERS	WITHOUT TRANSDUCER	WITH TRANSDUCER
	The valve regulation is performed by modulating the current supplied to the solenoid, without any feedback of the regulated value. The reguation accuracy is affected by the operating conditions.	The valve regulation is performed by modulating the current to the proportional solenoid according to the feedback signal from the LVDT or pressure transducer. The reguation accuracy is very high and it is independent to the hydraulic conditions.
ON-BOARD On-board digital drivers simplifies the electrical wiring and they are factory preset to assure repetitive regulation characteristics.	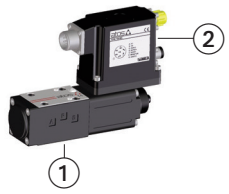	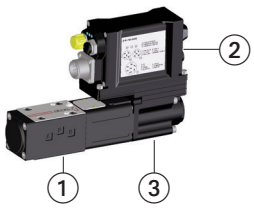
OFF-BOARD Off-board digital drivers are the ideal solution for remote cabinet installation in applications with critical temperatures or vibrations.	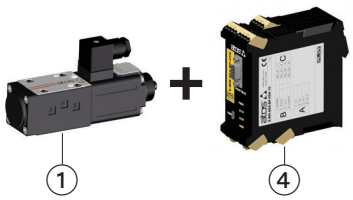	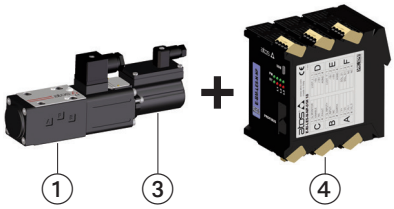

① Proportional valve ② On-board driver ③ Transducer ④ Off-board driver

2 PROPORTIONAL VALVES CLASSIFICATION - with on-board or off-board driver

PERFORMANCES ↑

Valve classification	Type of valve	Transducer	Hydraulic features	Application
Servoproportionals	Directional	LVDT	Zero spool overlap	Actuator position and speed control p/Q control
High performance proportionals	Directional	LVDT	Positive spool overlap	Actuator direction and speed control p/Q control
	Flow	LVDT	Pressure compensated	System flow regulation, actuator speed control
	Pressure	Pressure	Relief Reducing Compensator	System pressure control Actuator force control Load sensing control
Proportionals	Directional	None	Positive spool overlap	Actuator direction and speed control
	Flow		Pressure compensated	System flow regulation, actuator speed control
	Pressure		Relief Reducing Compensator	System pressure control Actuator force control Load sensing control

3 FIELDBUS INTERFACES - see tech table **GS510**

Drivers with fieldbus communication interface allow an higher level of integration with the machine automation architecture: machine central unit (fieldbus master), wired with all the controlled devices (fieldbus node).

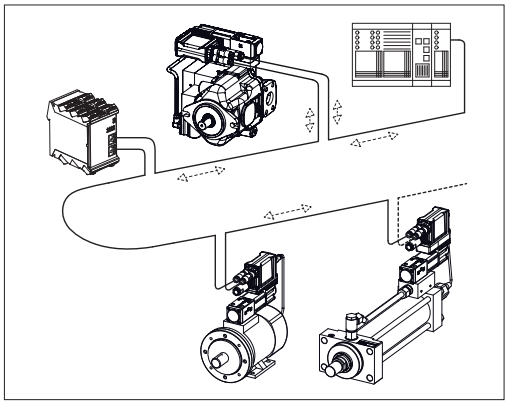

Fieldbus available:

BC = CANopen **BP** = PROFIBUS DP **EH** = EtherCAT
EW = POWERLINK **EI** = EtherNet/IP **EP** = PROFINET RT/IRT

Fieldbus interface allows:

- complete diagnostic of the driver status
- improved information available for machine operation
- improved accuracy and robustness of digital transmitted information
- real time modification of the valve parameters
- direct access to all driver parameters
- costs reduction due to simpler and standardized wiring solutions
- costs reduction due to fast and simple installation and maintenance

4 p/Q CONTROLS - see tech table **FS500**

4.1 p/Q controls for servoproportional and high performance directional valves

In most of the machines functions, the typical movement of a single actuator requires direction, speed and sometime force regulations, normally performed by different type of valves.
Digital proportional valves with SP, SF, SL options add the pressure or force closed loop control to the basic directional control.
A single proportional valve with p/Q control allows to manage complex machine operations requiring high performance combined regulations (typical application: injection cycle or mould motion in plastic machinery).
The closed loop pressure or force control requires the installation in the system of one/two remote pressure transducers or a load cell, to be connected to the valve digital driver.
The option SP performs the closed loop pressure control on one side of the actuator by using one remote pressure transducer.
The other two options perform the closed loop force control by two remote pressure transducers (SF) or one load cell (SL).
Pressure/force and flow are regulated according to two different command signals.
The selection from pressure-force to flow control and vice versa is self performed by the digital driver through dedicated algorithm.

p/Q control configurations

SP = pressure control	SF = force control	SL = force control
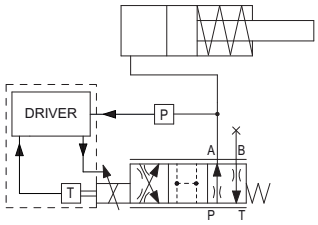	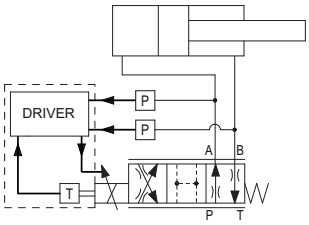	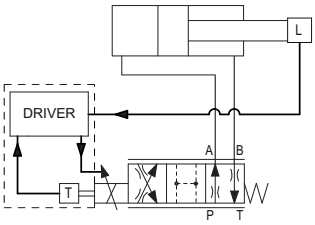
one remote pressure transducer has to be installed on the actuator's port to be controlled	two remote pressure transducers have to be installed on the actuator's ports; the actuator force is calculated by the pressure feedbacks (Pa - Pb)	one load cell transducer has to be installed between the actuator and the controlled load

T valve spool transducer P pressure transducer L load cell

4.2 Proportional valves with p/Q control - with on-board or off-board driver/axis card

Valve classification	Application
Servoproportionals	SF, SL SP only in 3-way connection
High performance proportionals	SP, SF, SL

4.3 p/Q controls for variable piston pumps - see tech table **AS170**

PVPC-PERS/PES variable displacement axial piston pumps, integrate the digital combined closed loop pressure and flow control with the electronic max power limitation.

A multiple set of PID parameters can be real time selected during the axis motion via the 12 pin connector (option /S) or through the fieldbus interface, to optimize the p/Q control performances.

The PVPC-PES pumps allow the accurate and dynamic closed loop control of the delivered flow and the system pressure.

5 AXIS CONTROLS

The modern architecture of industrial machinery strongly increases the demand of accuracy, repeatability and performance. This leads to the need of devices that integrate to the traditional axis positioning also the pressure/force controls.

Atos focuses the integration of axis cards functions with proportional electrohydraulics either in on-board or off-board format.

They improve motion performances, simplify the automation architecture and may be integrated in the fieldbus network.

5.1 Synthetic comparison

TYPE		ON BOARD AXIS CARD AND DRIVER	AXIS CARD WITH DRIVER FUNCTION	AXIS CARD
FORMAT / MAIN FUNCTION			DIN-rail format	DIN-rail format
Techincal table		**FS610 FS620 FS630**	**GS330**	**GS340**
Valve's driver function		●	●	n.a.
Nr. of controlled axis		1	1	1
Internal programmable cycles		simple	simple	complete
Graphic programming software		●	●	●
Position control		●	●	●
Position transducer interface:	Analog	●	●	●
	Digital (SSI or Encoder)	●	●	●
p/Q control		●	●	●
Analog transducer interface, pressure or force		2	2	2
Performance parameters setting (e.g. Dither, PID)		●	●	●
Valve parameters setting (e.g. Bias, Ramp, Scale)		● factory preset	● factory preset	●
Alternated control		●	●	●
USB interface		●	●	●
CANopen		●	●	●
PROFIBUS DP		●	●	●
EtherCAT		●	●	●
POWERLINK		●	●	●
EtherNet/IP		●	●	●
PROFINET RT/IRT		●	●	●
Digital input		1	1	3
Digital output		1	1	1
Analog input reference		2	2	2
Analog output monitor		2	2	up to 3

= options

5.2 Servoactuators - see tech table **FS700**

They are stand-alone units performing closed loop position plus optional alternated p/Q controls. These units are made by a servocylinder with position transducer and a servoproportional valve with on-board driver + axis card, factory assembled and tested.

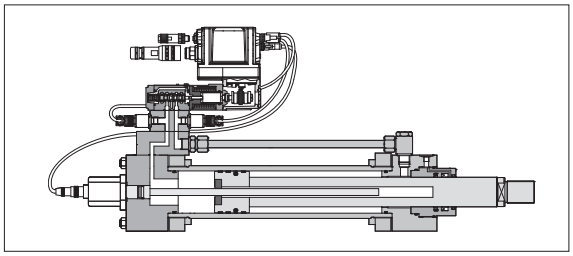

5.3 Digital servoproportionals with on-board axis card and driver, application example - see **FS610**, **FS620**, **FS630**

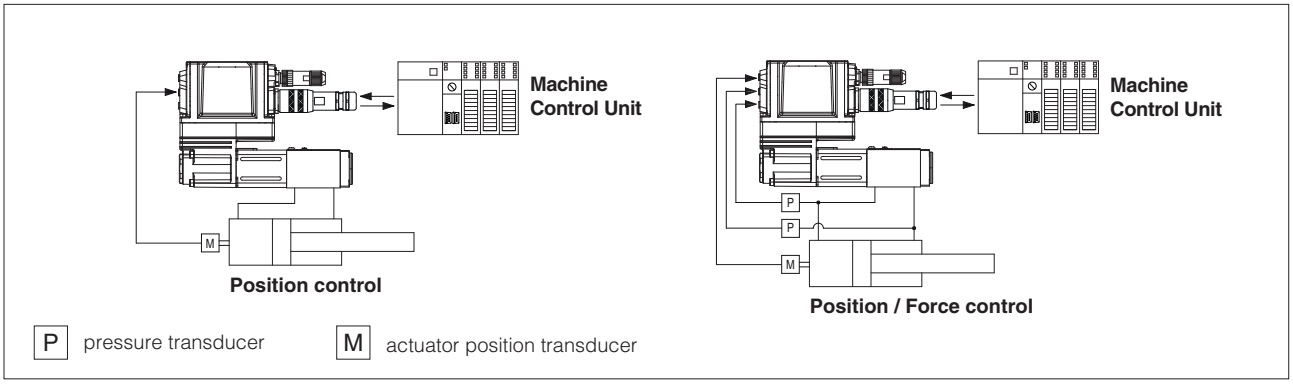

5.4 DIN-rail axis card with driver function, application example - see tech table **GS330**

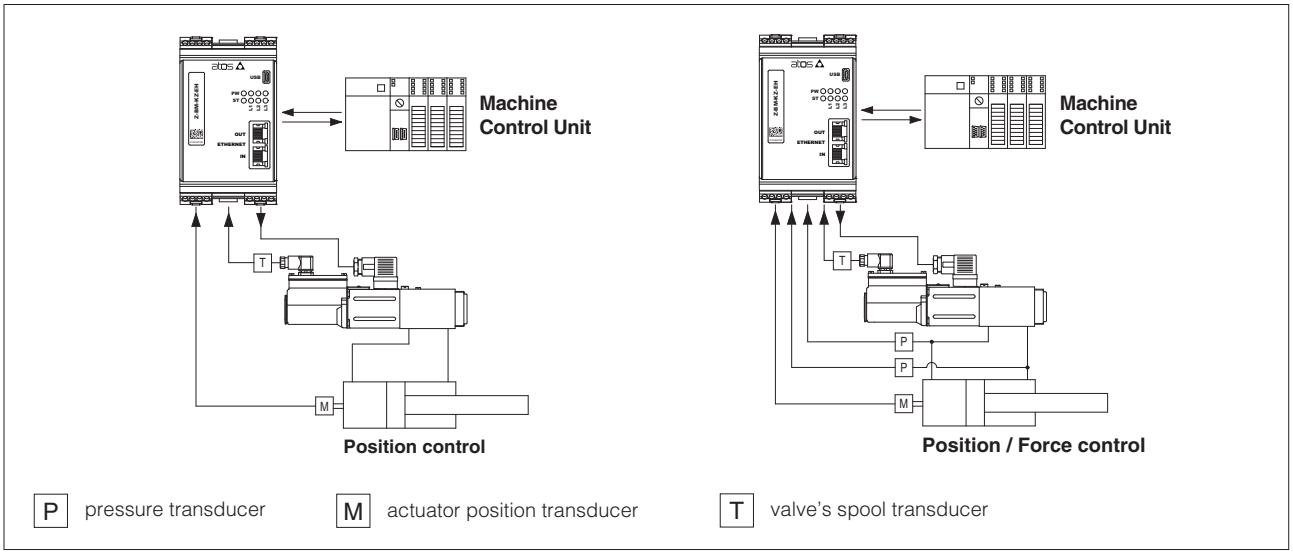

5.5 DIN-rail axis card, application example - see tech table **GS340**

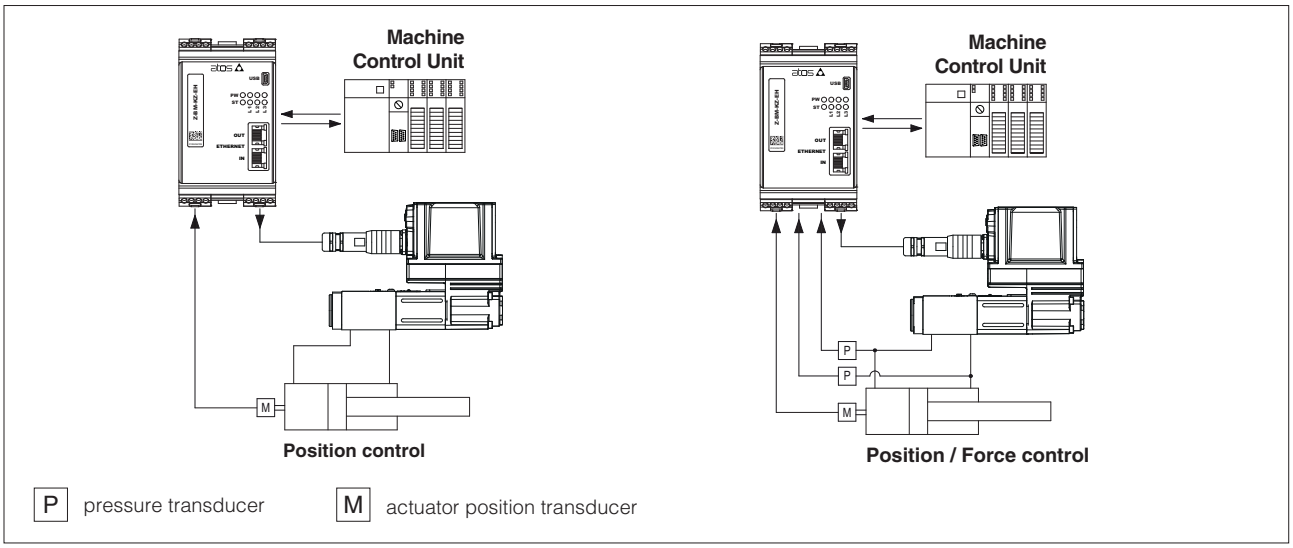

6 PROGRAMMING TOOLS - see tech table **GS500**

6.1 Atos CONNECT mobile App

Free downloadable App for smartphones and tablets which allows quick access to valve main functional parameters and basic diagnostic information via Bluetooth, thus avoiding physical cable connection and significantly reducing commissioning time.
Atos CONNECT supports Atos digital valve drivers equipped with E-A-BTH adapter or with built-in Bluetooth.
It does not support valves with p/Q control or axis controls.

6.2 E-SW-SETUP & Z-SW-SETUP PC software

Free downloadable software for PC allow to set all valve functional parameters and to access complete diagnostic information of digital valve drivers and axis controls via Bluetooth/USB service port.
Atos PC software support all Atos digital valve drivers and axis controls and they are available at www.atos.com in MyAtos area.

Basics for on-off solenoid directional valves

Atos solenoid valves have been designed and tested with innovative concepts to satisfy the advanced needs of modern machines: rapid or damped switching, quiet operation, reduced power absorbed, versatility, reliability and safety of use.
This table gives engineers, in condensed form, a series of useful information for the choice and the use of modern solenoid valves.

1 DESCRIPTION OF FUNCTION

Solenoid directional valves are used for changing flow direction in hydraulic systems.
Main features are:

1.1 New integrated design between hydraulic and electrical parts with more compact construction and better efficiencies.
1.2 Wet solenoids for maximum reliability, also available in flame-proof, intrinsically safe and stainless steel execution.
1.3 All seals are static and all the moving parts are protected and lubricated by the fluid.
1.4 Smoother switching with effective regulation thanks to optional switching control devices.
1.5 Plastic encapsulated coils easily interchangeable.
1.6 Electric or electronic connectors, depending on the application and on electric control board interface.
1.7 Cored oil passages with low pressure drops.
1.8 Interchangeable spools for various directional functions.

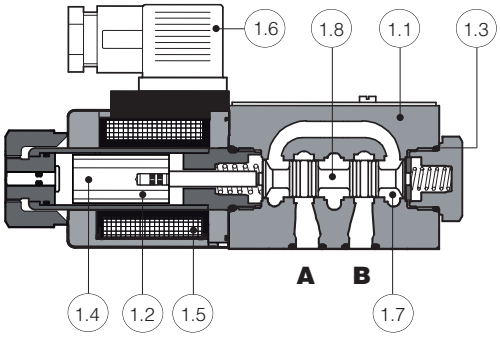

Fig. 1 Cross-section of direct operated solenoid valve

2 SOLENOID IDENTIFICATION

According to European Convention, solenoid "A" is close to "A" port and solenoid "B" is close to "B" port of the valve body (pilot valve body for two stage valves).

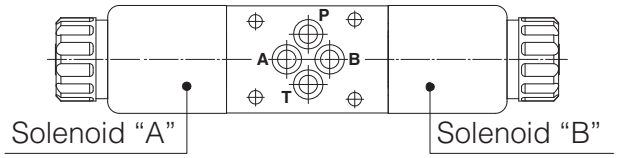

Fig. 2 Solenoid identification

3 SPOOLS CHARACTERISTICS

Standard interchangeable spools are available in a wide range of configurations, as indicated in table 3.

Specific spools to reduce water hammer-shocks during switching: variants 1/1, 4/8 and 5/1. Their special shape reduces water hammer-shocks during switching. Use of these spools is not recommended with maximum flow greater than 80% of the nominal values, because of higher pressure drops generated in the valve.

Response times and control of switching time: direct operated solenoid valves.
The solenoid valve response times can be controlled by the use of specific devices (option L); associated with the spools */1 and */8 it is possible to control smooth acceleration/deceleration of the connected actuator. The L* devices allow an effective control of the solenoid valve switching time, slowing down the spool speed without reducing the solenoid force. They are available in different configurations. For correct use a slight backpressure (2 bar) on solenoid valve T port is recommended. Valve response time is also influenced by operating conditions (oil characteristics and temperature), elasticity of the hydraulic circuit and by use of electronic connectors.

Type	Scheme	Intermediate passages
0		
1		
2		
3		
4		
5		
58		
6		
7		
8		
0/2		
1/2		
2/2		
16		
17		

Table 3 Basic spools, schemes and intermediate passages between central and external positions. **The spools are not available for all the directional valves. For their availability see the relevant valve table.**

Response time and control of switching time: pilot operated solenoid valves.
The response time of the piloted valves can be adjusted by means of the options /H (meter-out control) or /H9 (meter-in control). This options provide the installation between the main stage and the pilot valve of a modular throttle valve, type HQ-*/U specific for fine pilot flow control.
Associated with */1 and */8 spools, smooth acceleration/deceleration can be controlled on loads.

***P spools for direct operated solenoid valves to reduce leakage.**
They are normally used on pilot valve for pressure and directional control valves, for cartridge valves and systems with specific requirements.
Use of these spools is not recommended with maximum flow greater than 70% of the nominal values, because of the higher pressure drops generated in the valve.
Following types available: 1P, 3P, 1/2 P, 8P (for ISO size 06 valves).

4 COIL CHARACTERISTICS

Solenoid valves are available both with DC and AC coils.
- OE-AC and OE-DC solenoids for DHE valves are available respectively for AC and DC supply
- AE-AC and AE-DC solenoids for DKE valves are available respectively for AC and DC supply

For solenoids OE and AE, the coils of different voltages are interchangeable only for the same type of power supply AC or DC.
The DC solenoids can be also fed with AC supply, by using 669 connector.

5 ELECTRICAL CONNECTORS TO ISO 4400 (DIN 43650)

The cable entry on electrical plugs can be fitted at 90° intervals by reassembling the contact holder relative to the plug housing.
The cable entry is Pg. 11 suitable for cable Ø 6-10 mm.
Following types are available:
Standard connectors, IP65 protection degree (666);
Connectors with built in LED (667);
Connectors with built in rectifier bridge (669) to supply DC coils by alternating current AC.
In addition to the above DIN connectors, other type of electrical interfaces are available on request:
- Lead Wire connection
- Deutsch connector DT-04-2P (IP67)
- AMP Junior Timer connector (IP67)

6 ELECTRONIC CONNECTORS

Operational principle
E-SD to eliminate electric disturbances when solenoids are deenergized;

7 OPERATING NOTES

Tightening of the fixing screws to the subplates and of the plastic coil ring-nut.
It is particularly important to check that the tightening of the fixing screws respects the torque limits indicated in table 4.
Higher values may cause anomalous deformations of the body and prevent sliding of the spool. 12.9 class fixing screws are recommended. The plastic coil ring-nuts will be fixed on the solenoid with a torque 4Nm: this deforms properly the seals and protects against external particles and water entrance.

Operation in circuits with flow exceeding the nominal valve flow
In circuits with flow rates greater than the nominal values and in circuits with accumulators, where the instantaneous flow can exceed nominal values, is recommended a plug-in restrictor on P port of solenoid valve to limit the maximum flow on the valve.
Dilatation and contraction of flexible hoses subjected to variations of system pressure can generate high instantaneous flow rates.
The version indicated in fig.5 can be directly inserted into P port of the valve but also in other valve ports.
The plug-in restrictors can be ordered separately:
PLUG H-** (for DH* valves)
PLUG K-** (for DKE* valves)
** the double asterisk identifies the dimension in tenths of a millimeter.
Example: PLUG H-05 = 0,5 mm diameter

Limits on two-way and three-way operation for direct operated solenoid valves.
When used as two-way and three-way valves with P, A or B ports blocked or not subject to flow, or with flow much lower than flow on other ports, maximum catalogue performance cannot be assured.

Minimum pilot pressure for pilot operated solenoid valves.
A minimum pressure value must be guaranteed for piloting the valve. This value is 8 bar. For spools with P-T connection in rest position, the option /R should be used.

Operation combined with hydraulic cylinders with high section ratios.
Operational limits may occur with cylinders with section ratios (piston/rod) greater than 1.25. In these cases multiplications or demultiplications of flow and pressure may disturb the correct operation of the solenoid valve.

Table 3.2 Spools to reduce water hammer shocks associated with switching

Type	Scheme	Intermediate passages
0/1		
1/1		
3/1		
4/8		

Table 3.3 Specific spools for special uses or in regenerative circuits

Type	Scheme	Intermediate passages
09		
90		
19		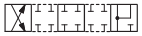
91		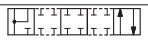
39		
93		
49		
94		

8 SPECIAL VERSION SOLENOID VALVES

- for explosion-proof environments
- for intrinsically safe operation
- stainless steel execution for marine or aggressive environments or water base fluids
- for operation beyond the allowed temperature limits.

Table 4
Recommended torque for the fixing screws

Valve type	Fixing screws class 12.9	Torque
DH*	M5	8 Nm
DKE*	M6	15 Nm
DP**-2	M10 & M6	70 Nm & 15 Nm
DP**-4	M12	125 Nm
DP**-6	M20	600 Nm

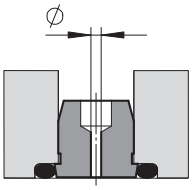

Fig. 5
Plug-in restrictor for DKE valves

Basics for safety components

IEC 61508 Safety Integrity Level and **ISO 13849** Performance Level - certified by

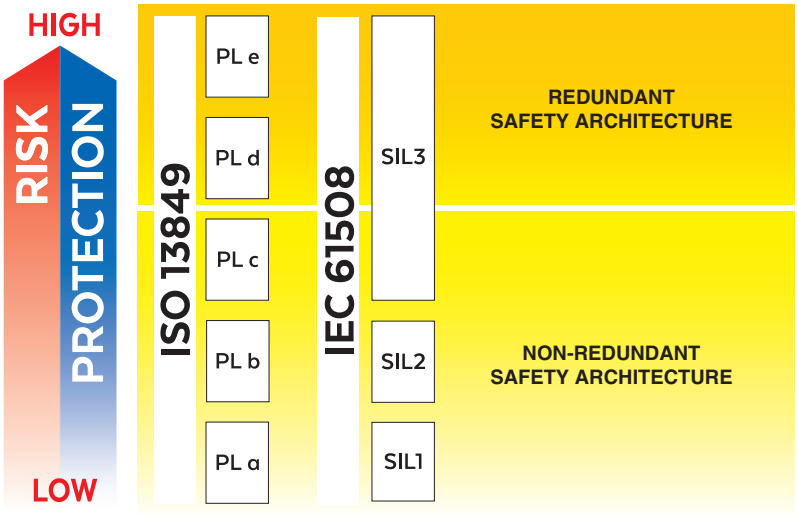

Safety in engineering of modern machinery is becoming a primary issue to protect people from potential risks caused by accidental failures of machines and systems.

The **Machine Directive 2006/42/EC** with relevant norms **IEC 61508 Safety Integrity Level** (SIL) and **ISO 13849 Performance Level** (PL), represents the framework of the functional safety, which is a key aspect in terms of general principles of prevention concerning safety of devices or systems with health implications.

It defines the safety requirements that the machine manufacturer must comply with, in order to obtain the certification and thus the possibility to apply the CE mark required to sell the machine within the European market.

Machine Directive 2006/42/EC replaces the existing 98/37/EC and it is universally applicable to machinery, safety components, and other specific equipment.

1 SAFETY NORMS

IEC 61508 and relevant norms **IEC 61511** (process control system) plus **IEC 62061** (machine control systems) introduce the integrated probabilistic approach to the functional safety. They specify the Safety Integrity Levels (SIL) required to perfom safety functions.

ISO 13849 norm provides safety requirements and guidance on the principles for the design and integration of safety-related parts of control systems including the design of software.

It specifies the Performance Level (PL) required to perform safety functions.
PL: discrete value that specify the ability of safety related parts of control systems to perform a safety function under forseeeable conditions.

The requirements are classified into five Performance Levels, where **PL e** identifies the highest protection level.

2 CERTIFICATION

Atos safety valves (on-off and proportionals) are certified by TÜV in compliance with IEC 61508, IEC 61511, IEC 62061, ISO 13849

The certification guarantees the valve compliance with related safety norms and it proves that all requirements have been met for the SIL and PL levels claimed for the specific valve.

The certification also confirms the following data which can be used by the machine manufacturer for the certification of the whole system:

- the design process used by the valve manufacturer to avoid failures
- the design techniques and measures used to control failures
- the methods used to define hardware fault tolerances
- the methods used to measure the safe failure fractions
- the methods used to measure the probabilities of failure

⚠ **The use of non-certified products invests the machine manufacturer of the responsability for validating that all above aspects have been carried out according to the applicable standards.**

Without valve's certification the machine manufacturer has to alternatively:

- collect from valve's manufacturer all the reliability data necessary to evaluate the safety level of the whole system
- consider the worst case concerning the safety level (e.g. assign to valves the lower safety level **PL a** or **SIL 1** in order to calculate system safety)

3 RISK ASSESSMENT

The first step for determining the necessary risk reduction is the Risk Assessment.
It is a procedure carried out to identify which risks in the machine require a mitigation by means of safety control systems (e.g. laser barriers, shut-off valves, enabling devices, etc). Each of these control systems become a Safety Function.
At that point the safety functions must be defined and satisfied by the machine design (see 3.1).

⚠ **It is the responsibility of the machine manufacturer to ensure that all safety requirements are satisfied and to conduct a documented risk assessment to ensure that all potential machine hazards are covered.**

3.1 Machine Manufacturer

With the name of “Machine Manufacturers” are identified OEMs or end users who manufacture machinery for their own needs or everybody who performs “significant modifications “as:

- change the machine function
- change the machine application area
- change the equipment
- change the machine performance

If changing any of the above parameters results in either change of intended use or change of safety system or safety component, a machine modification should be treated as “significant”.

Example:

Adding air-gun pneumatic connection = NOT significant modification

Adding hydraulic accumulator to increase the speed and improve cycle time of the machine = significant modification

4 SAFETY RELATED PARTS

They are parts of machine control systems performing safety functions, allowing the system to achieve or maintain a safe status.
These parts consist of either hardware or software and stand-alone or integrated components of the machine control system.
Safety-related parts incorporate the entire effective chain of a safety function provided by control unit, valves, sensors and actuator.

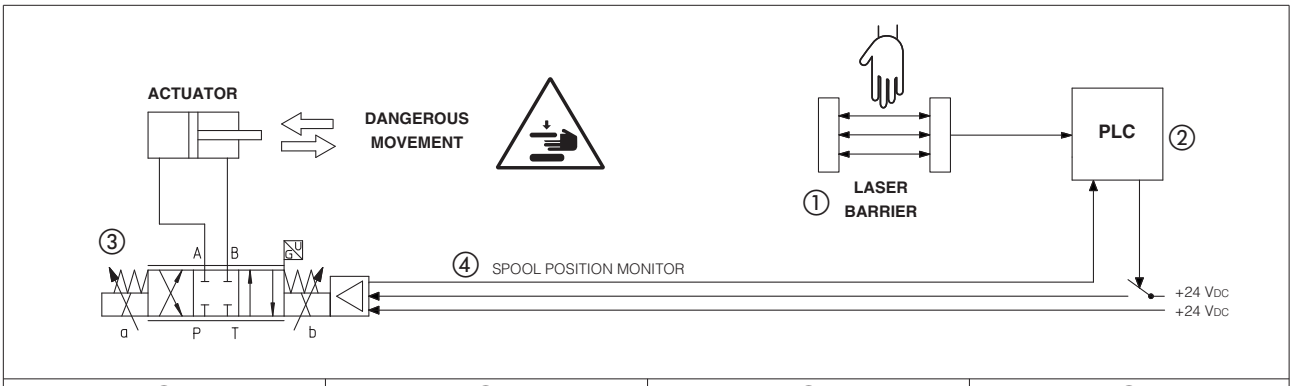

①	②	③	④
SENSORS	LOGIC	VALVE	VALVE DIAGNOSTICS
Detect dangerous situations	Controls the machine operations and activates the safety procedures in case of dangerous situations	Controls the actuator and avoids the dangerous movement	Monitors the correct valve operation

5 SAFETY ANALYSIS

The second step after the identification of the risk is the Safety Analysis.
The process for the design of the safety-related parts of control systems, is iterative.

The aside scheme shows the one used by EN ISO 13849-1:

- The first step consists in the identification of the Safety Functions.
- Any characteristics of all safety functions must be described and documented.
- The Performance Level required (PLr) by each safety function must be defined. ISO13849-1 uses a path like the one shown in section 5.1.
- The machine manufacturer must designe a system to protect the operator, granting a Performance Level (PL) equal or higher than the Performance Level required (PLr). The Performance Level (PL) must be defined considering following parameters:
  - MTTFd, reliability of safety system – see section 5.2
  - DC, capability to detect faults – see section 5.3
  - CCF, vulnerability of the system to failures – see section 5.4
  - architecture categories of the safety system – see section 6

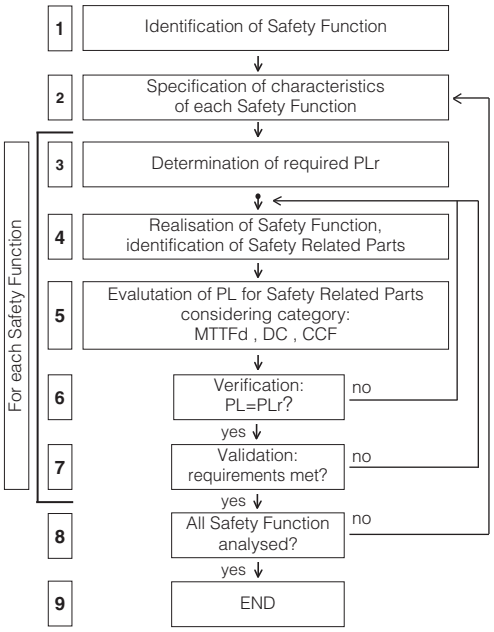

5.1 Performance Level required - PLr

The determination of PLr for ISO 13849-1 is carried out analysing the following parameters:

- Severity of harm:
  S1 = slight
  S2 = serious
- Frequency and duration of exposure to the hazard:
  F1 = not often
  F2 = frequent
- Possibility of avoiding the hazard or limiting the harm:
  P1 = possible
  P2 = rarely possible

Each of five performance levels corresponds to a further parameter scale, based on the probability of a dangerous failure per hour.

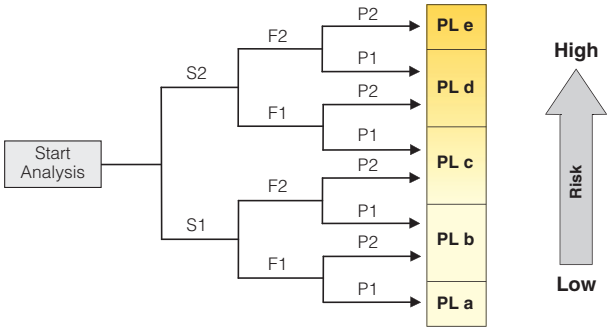

Performance Level	Average probability of dangerous failures per hour, h-1
PL e	$\geq 10^{-8}$ to $< 10^{-7}$
PL d	$\geq 10^{-7}$ to $< 10^{-6}$
PL c	$\geq 10^{-6}$ to $< 3 \times 10^{-6}$
PL b	$\geq 3 \times 10^{-6}$ to $< 10^{-5}$
PL a	$\geq 10^{-5}$ to $< 10^{-4}$

5.2 Mean Time to Failure dangerous - MTTFd

The achievement of a specific PL or SIL relies on the reliability of the system.
The reliability is quantified by Mean Time to Failure dangerous (MTTFd) which is measured in hours.

The MTTFd should be determined from the component manufacturer's data.

5.2 Diagnostic Coverage - DC

The Diagnostic Coverage (DC) is a measure of how effectively the potential dangerous failures can be detected by the monitoring system.

EN ISO 13849-1 suggests how to define DC.

Diagnostic Coverage is defined as the measure of the effectiveness of diagnostics: it is determined as the ratio between the failure rate of detected dangerous failures and the failure rate of total dangerous failures;

DC = 0% no dangerous faults are detected

DC ≅ 100% most of dangerous faults are detected (it is impossible to reach a DC = 100% because diagnostics are not considered to be completely reliable)

Diagnostic Coverage categories:

Category	Range
None	DC < 60%
Low	60% ≤ DC < 90%
Medium	90% ≤ DC < 99%
High	DC ≥ 99%

5.3 Common Cause Failure - CCF

The CCF value is a parameter for evaluating the measures against the common cause failure.
It is a failure in redundant systems where two or more channels fail at the same time in consequence of a single common cause.
The redundancy can be compromised if both channels fail simultaneously due to the same cause.
EN ISO 13849-1 provides a score for CCF, which is used to determine the Performance Level (PL).

For this score, EN ISO13849-1 defines a checklist of seven important countermeasures:

1. The signal paths of different channels are physically separated (score = 15 points)
2. Diversity in the technology, the design or the physical principles of the channels (score = 20 points)
3. Protection against possible overloading (15 points) and the use of well-tried components [which are those components which have been widely used or made and verified for safety related application (score = 5 points)]
4. Failure mode and effects analysis during development for the identification of potential common cause failures (score = 5 points)
5. Training of designer/service personnel in CCF and its avoidance (score = 5 points)
6. Protection against common failures caused by contamination (fluid filtration) and electromagnetic interference for electrical parts(score = 25 points)
7. Protection about common cause failures caused by unfavorable environmental conditions (score = 10 points)

For architecture categories 2, 3 and 4 a minimum score of 65 points is required (see section 6).

Note: CCF always depends on the system and application.

6 ARCHITECTURE CATEGORIES

SIL and PL levels depend not only on the characteristics of the single component but also on the architecture of the hydraulic system and of the signals diagnostic.
Architecture categories help to define the probability of failure and the PL of the safety related parts of a control system in relation to their resistance to faults and their subsequent behavior in the fault condition
There are five architecture categories, identified as : **B, 1, 2, 3, 4**
The higher is the number, the higher is the complexity of the safety system and the higher is the achieved Performance Level PL.

6.1 Architecture categories B and 1

In categories B and 1, the resistance to faults is mainly achieved by the selection of proper components. They are not-redundant architecture so the occurence of a failure may lead to the loss of the safety function.
Category 1 has a greater resistance than category B because of the use of special components and principles which are considered well-tried and tested in a safety system.

Example of architecture category 1

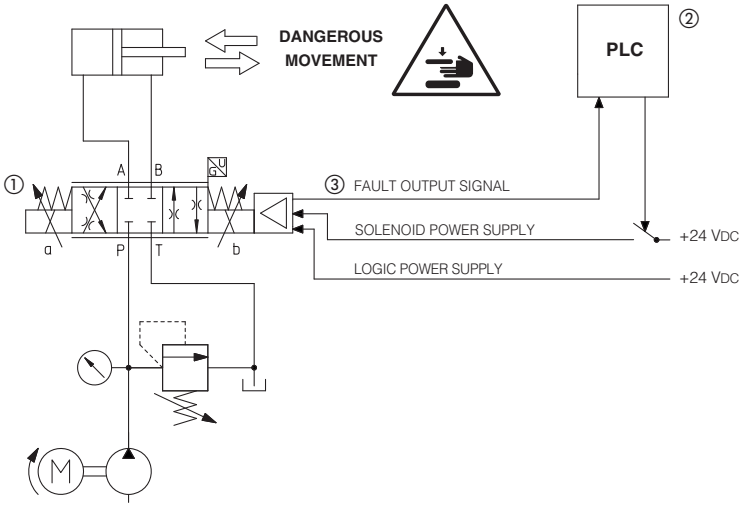

Safety function = to prevent the dangerous cylinder movement in a certain phase of the cycle or in emergency

The safety function is achieved by disabling the current to the solenoids of safety proportional valve so that the spool is moved by the springs to the rest position with positive overlap.

Through the continuous monitoring of the valve's spool position, the machine PLC verifies if the "safe condition" is fully accomplished.

⚠ **The safety function is not performed in case of valve ① failure**
Fault tolerance HFT = 0

① Digital proportional valve with double power supply - option /U
(i.e. DHZO-TES-SN-NP-07*-L5 **/U**)

② Machine PLC supervising the safety function

③ Fault output signal used for safety diagnostics

6.2 Architecture - category 2

In category 2 all of the requirements of architecture B and 1 are combined. In addition, the system is monitored to intercept faults affecting the safety function.
These monitors are made at regular intervals, e.g. at startup or before the next demand on the safety function.
By using an appropriate selection of test intervals, a suitable risk reduction can be obtained.

6.3 Architecture categories 3 and 4

In categories 3 and 4, the occurrence of a single fault does not result in the loss of the safety function.
In category 4 such faults are detected automatically.
Accumulation of faults will not lead to a loss of the safety function.

Example of architecture category 4

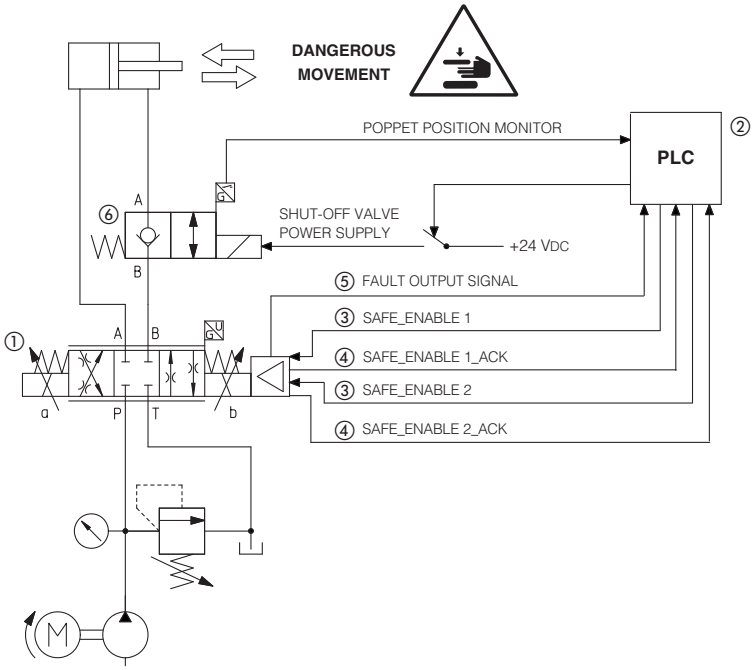

Safety function = to prevent the dangerous cylinder movement in a certain phase of the cycle or in emergency

In this example a safety shut-off valve with poppet position switch has been added to the safety proportional valves to grant a **redundant safety architecture**.

The safety function is performed by disabling the current to the solenoid of safety proportional valve and safety shut-off valve so that the spool is moved by the springs to the rest position with positive overlap.

The safety condition is confirmed by:

- SAFE_ENABLE_ACK status = 24 VDC
- shut-off valve poppet position monitor signals

⚠ **The safety function is performed even in case of failure of one valve, ① or ⑥**
Fault tolerance HFT = 1

① Digital proportional valve - option /K
(i.e. DHZO-TES-SN-NP-07*-L5 **/K**)

② Machine PLC supervising the safety function

③ Signals used to enable/disable the current to the valve's solenoids

④ Signals confirming the valve safe status

⑤ Fault output signal used for safety diagnostics

⑥ Safety shut-off valve with poppet position monitor (i.e. JO-DL **/FV**)

Programming tools for valve drivers & axis controls

Atos CONNECT mobile App, Atos PC software, Bluetooth/USB adapters, cables and terminators

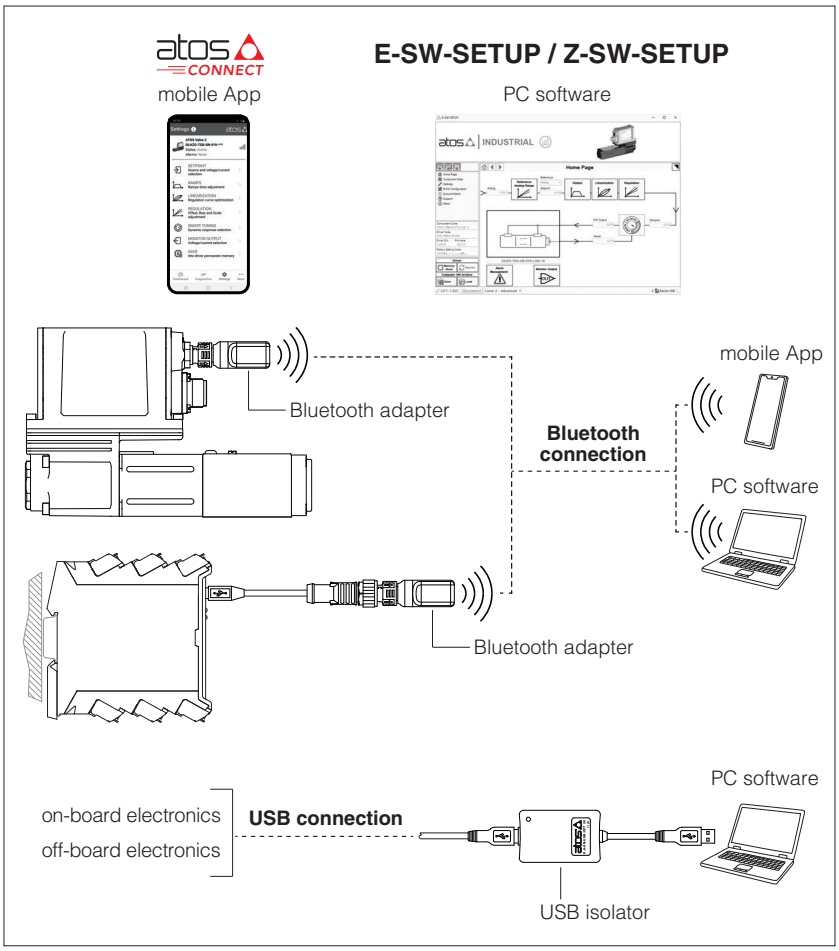

Atos CONNECT is a free iOS / Android mobile App available in the respective App stores, while E-SW-SETUP and Z-SW-SETUP programming software are developed for Windows and free downloadable at www.atos.com in MyAtos download area.

The intuitive interface allows:

- set up valve's functional parameters
- verify the actual working conditions
- identify and quickly solve fault conditions
- adapt the factory preset parameters to the application requirements
- store the customized setting into the valve drivers or axis controls
- archive the customized setting into the PC

The interface is organized in pages related to different specific groups of functions and parameters.

The connected devices models are automatically recognized and the parameters groups will be displayed.

General features:

- automatic recognition of connected devices
- numeric parameters settings (scale, bias, ramp, linearization, dither, etc.)
- real-time parameters modification
- diagnostic and monitor signals

Atos CONNECT mobile App:

- supports Bluetooth communication for all Atos devices except valves with p/Q control or axis controls (see section 9)

E-SW-SETUP / Z-SW-SETUP PC software:

- supports Bluetooth/USB communication for all Atos devices (see section 10)
- internal oscilloscope function
- firmware update

1 PROGRAMMING TOOLS

1.1 Atos CONNECT mobile App

Free downloadable App for smartphones and tablets which allows quick access to valve main functional parameters and basic diagnostic information via Bluetooth, thus avoiding physical cable connection and significantly reducing commissioning time.
Atos CONNECT supports Atos digital valve drivers equipped with E-A-BTH adapter or with built-in Bluetooth.
It does not support valves with p/Q control or axis controls (see 9.2).

Minimum requirements

iOS	iOS 14
Android	Android 9
Interface	Bluetooth Low Energy (BLE), version 4.0

Download on the App Store

GET IT ON Google Play

1.2 PC software

Free downloadable software for PC allows to set all valve functional parameters and to access complete diagnostic information of digital valves drivers and axis controls via Bluetooth/USB service port.
Atos PC software supports all Atos digital valves drivers and axis controls and it is available in MyAtos area upon web registration at www.atos.com.

Different software versions are available:

E-SW-SETUP = for valve drivers

Z-SW-SETUP = for axis controls

Minimum requirements

Personal Computer	Pentium® processor 1GHz or equivalent
Operating System	Windows 7 SP1
Monitor Resolution	1024 x 768
Memory	2 GB RAM + Hard Disk with 1 GB free space
Interface	USB port Bluetooth Low Energy (BLE), version 4.0

2 BLUETOOTH connection - ADAPTER AND CABLE

Bluetooth connection permits the functional parameters programming through mobile App and PC software **(1)**.

2.1 Connection tools

Adapter and cables shown in the image below can be ordered individually or in a single solution purchasing a dedicated kit: **E-KIT-BTH**

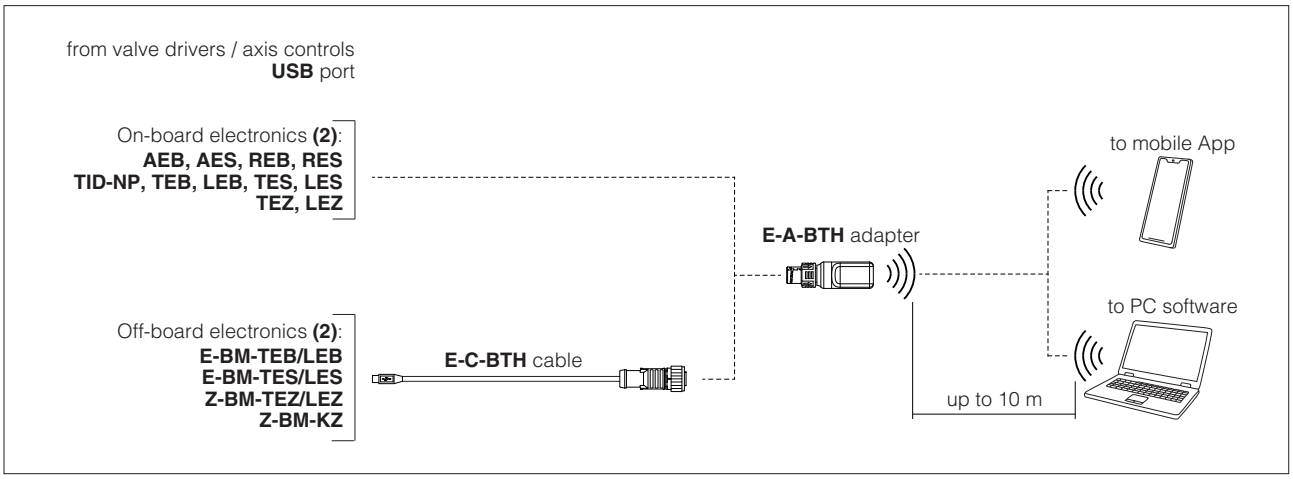

(1) The previous versions of the Bluetooth adapter and cables are still compatible (see 9.1)

(2) Bluetooth not available for off-board E-BM-AES, E-BM-RES and on-board TID-BC valve drivers

2.2 E-A-BTH - Bluetooth adapter

E-A-BTH adapter adds the Bluetooth® connectivity to Atos valve drivers and axis controls. E-A-BTH adapter can be left permanently installed on-board, to allow the Bluetooth connection with the valve drivers and axis controls at any time. E-A-BTH adapter can be directly supplied with the valve dirvers selecting **T** option or purchased separately.
Bluetooth connection to the Atos devices can be protected against unauthorised access by setting a personal password.
The adapter leds visually indicates the status of valve drivers or axis controls and Bluetooth connection.
For more info, please refer to STARTUP-BLUETOOTH guide.

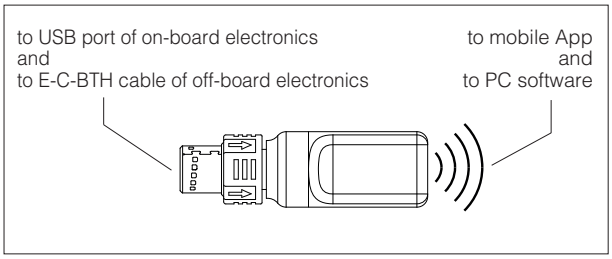

- M12 male connector, coding B, 5pin, push pull type
- Operating temperature: -40 ÷ +60 °C (storage -40 ÷ +70 °C)
- Bluetooth technology: Bluetooth Low Energy (BLE) 5.4
- Max RF transmission power: +6 dBm
- Frequency: 2.402 GHz to 2.480 GHz
- Format: IP66 / IP67 protection degree
- Mass: 14 g
- Two LEDs for an immediate basic diagnostic
- External power supply not required (from Atos digital electronics only)

Overview and dimensions [mm]

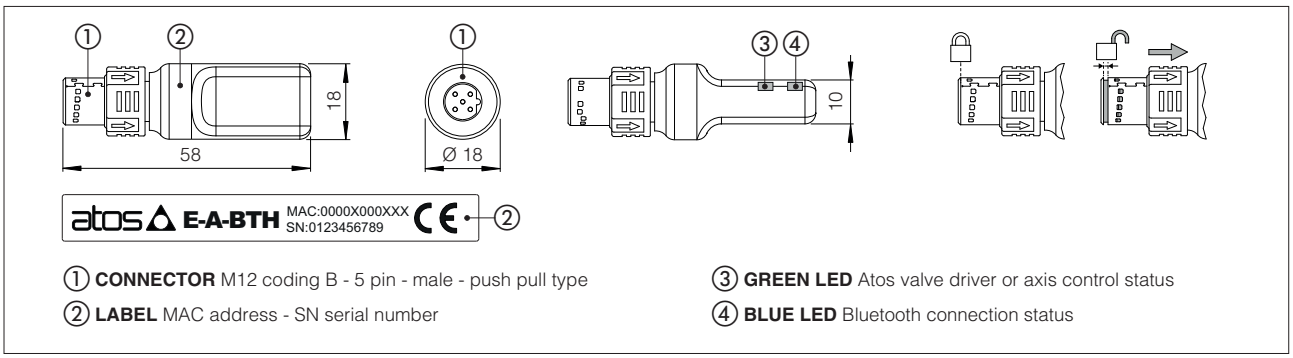

WARNING: Bluetooth adapter is available only for Europe, USA, Canada, China, Japan, India, Korea markets!
Bluetooth adapter is certified according to RED (Europe), FCC (USA), ISED (Canada), SRRC (China), MIC (Japan), BIS (India), KC (Korea) directives

2.3 E-C-BTH cable - 10 cm length - only for off-board electronics

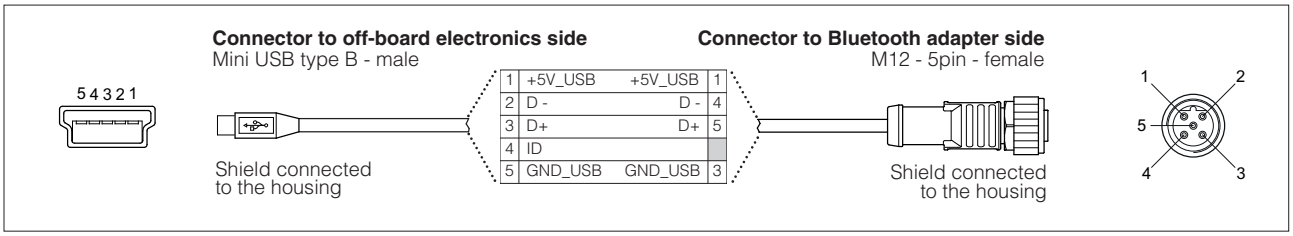

3 USB connection - ISOLATOR AND CABLE

USB connection permits the functional parameters programming through PC software.

3.1 Connection tools

Isolator and cables shown in the image below can be ordered individually or in a single solution purchasing a dedicated kit: **E-KIT-USB**

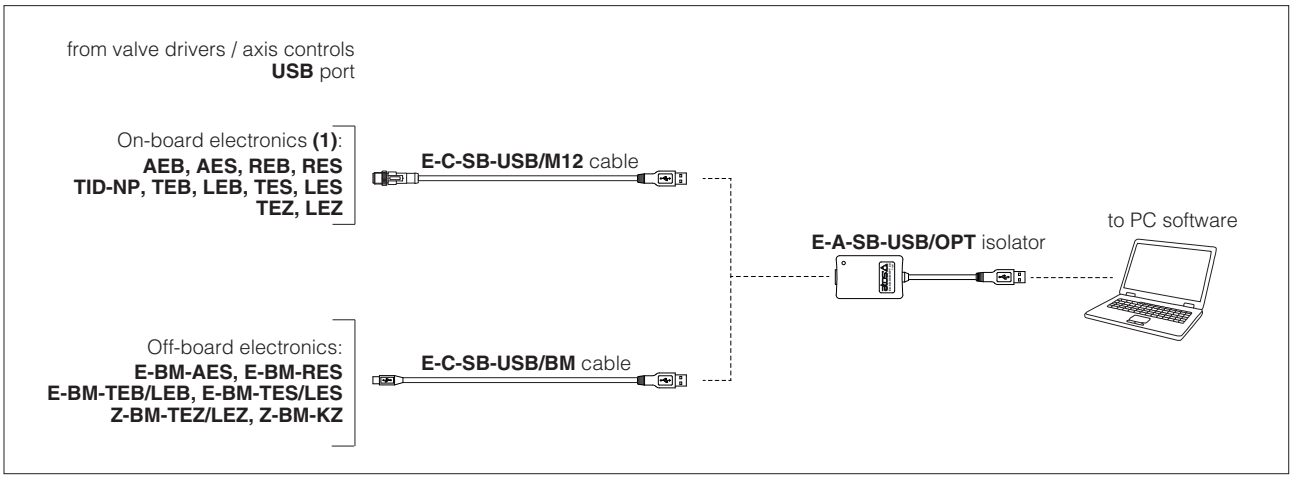

(1) USB port is not available for on-board TID-BC valve drivers

WARNING: the USB port of valve drivers / axis controls is not isolated and use of USB isolator adapter is highly recommended!
Wrong earthing connections may cause high potential difference between GNDs, generating high currents that could damage valve drivers / axis controls or the connected PC.

3.2 **E-A-SB-USB/OPT** isolator adapter

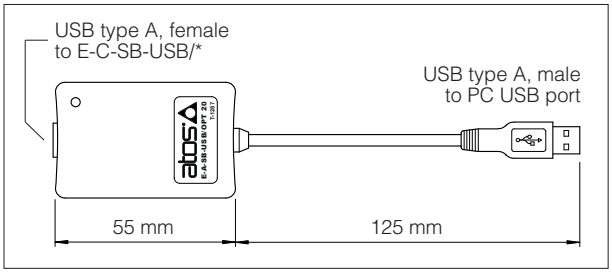

- USB 2.0 Full speed (12 MBps)
- electrical isolation 3 kV
- temperature range, -40°C ÷ +80°C
- external power supply not required
- PC driver not required
- status LED

3.3 **E-C-SB-USB/M12** cable - 4 m length - only for on-board electronics

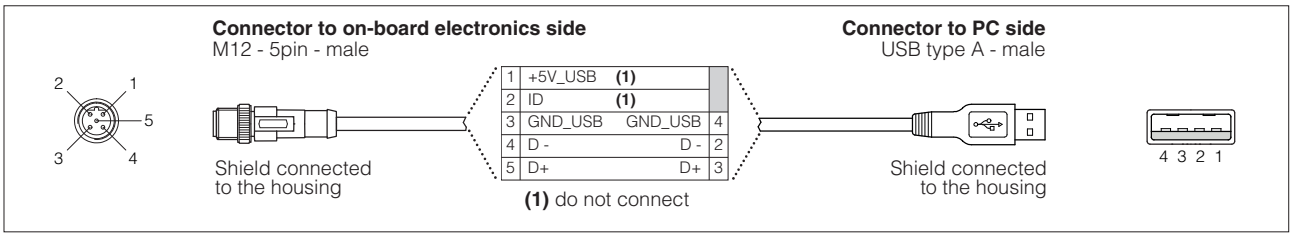

3.4 **E-C-SB-USB/BM** cable - 3 m length - only for off-board electronics

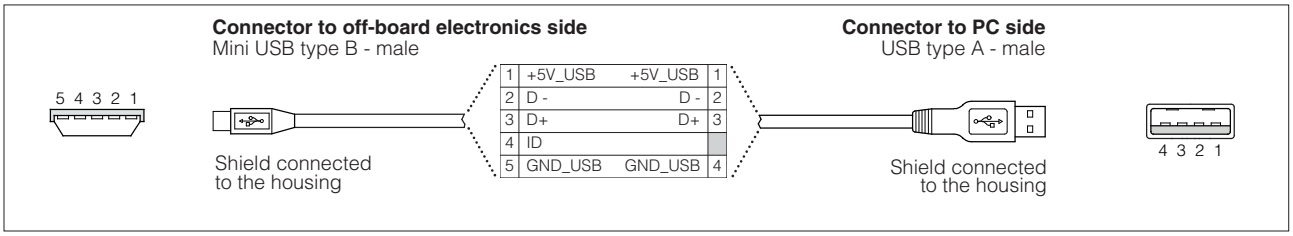

4 IR infrared - USB COMMUNICATION ADAPTER - only for on-board **E-MI-AS-IR** valve drivers

The adapter have to be connected to the USB communication port of PC to activate the IR infrared communication interface towards Atos digital electrohydraulics.

4.1 Connection tools

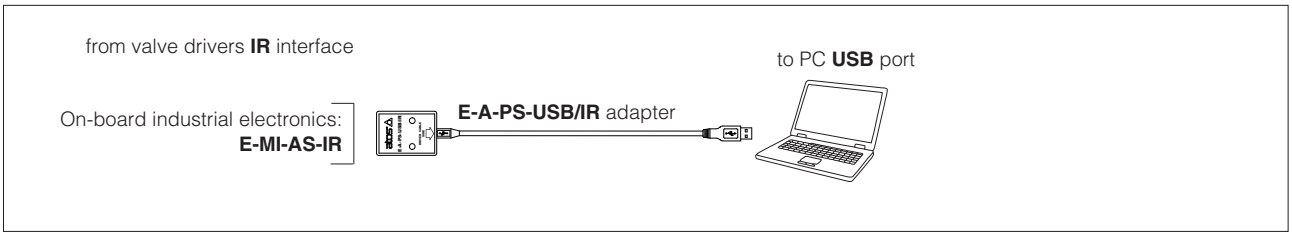

4.2 **E-A-PS-USB/IR** adapter - 3 m length

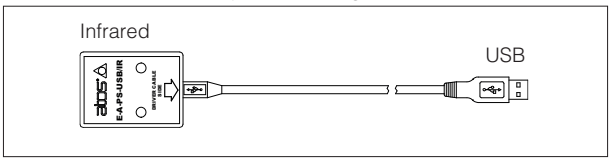

- direct infrared communication with the valve driver
- USB male connector, type A
- plug-in format for direct infrared connection on the valve driver
- transmission rate 9,6 kbit/s
- external power supply not required (USB supply)

5 PS serial RS232 - USB COMMUNICATION ADAPTER AND CROSS CABLES - only for off-board **E-BM-AS** valve drivers

The adapter have to be connected to the USB communication port of PC to activate the PS serial RS232 communication interface towards Atos digital electrohydraulics. The cross cables connect the relevant connector of the USB adapter with the communication port of the valve drivers.

5.1 Connection tools

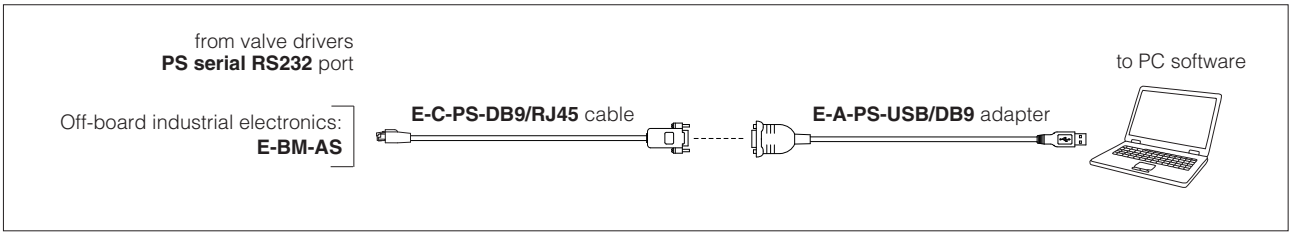

Note: the adapter is not required if PC is already equipped with a serial RS232 communication port

5.2 **E-A-PS-USB/DB9** adapter - 0,45 m length

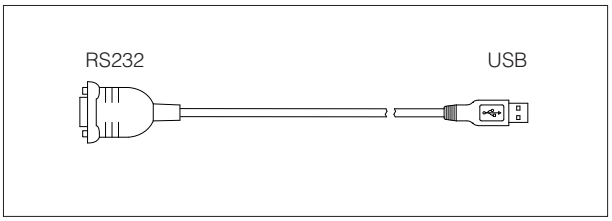

- DB9 male connector according to serial RS232 specification
- USB male connector, type A
- transmission rate from 1,6 kbit/s up to 225 kbit/s
- external power supply not required (USB supply)

5.3 **E-C-PS-DB9/RJ45** cable - 2,5 m length

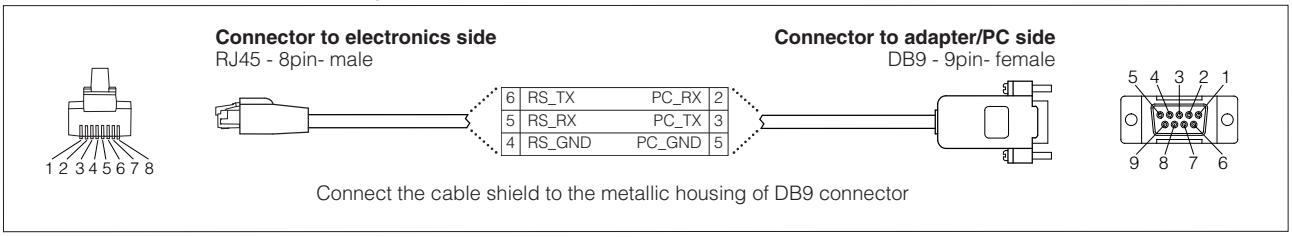

6 BC CANopen - USB COMMUNICATION ADAPTER AND CROSS CABLES - only for on-board **TID-BC** valve drivers

The adapter have to be connected to the USB communication port of PC to activate the BC CANopen communication interface towards Atos digital electrohydraulics. The cross cables connect the relevant connector of the USB adapter with the communication port of the valve drivers.

6.1 Connection tools

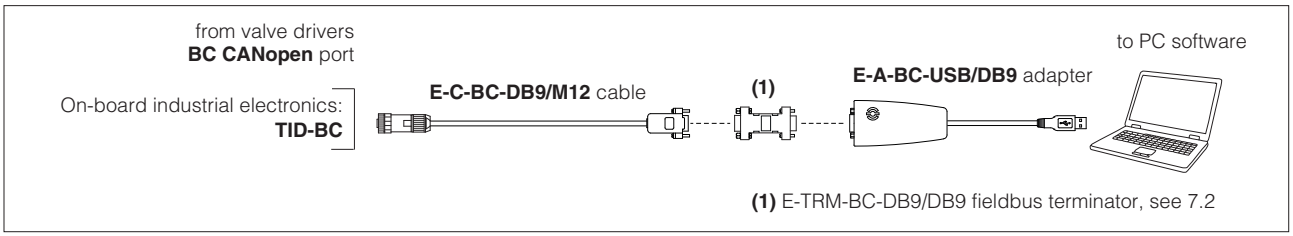

6.2 **E-A-BC-USB/DB9** adapter - 2 m length

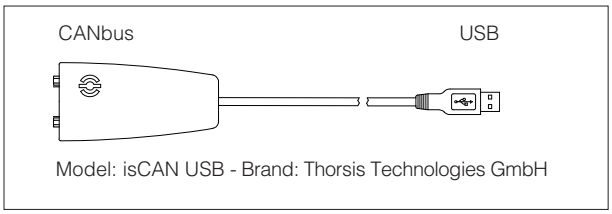

- DB9 male connector according to the CiA specification DR303-1
- USB male connector, type A
- transmission rate from 10 kbit/s to 1 Mbit/s
- external power supply not required (USB supply)
- LEDs indicate the actual working condition

6.3 **E-C-BC-DB9/M12** cable - 2 m length

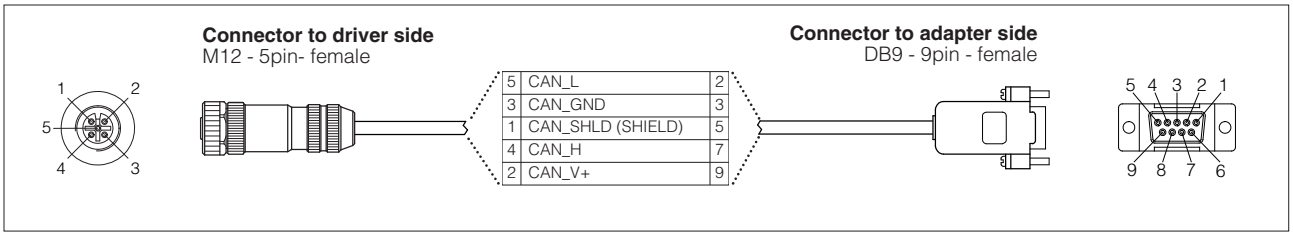

5	CAN_L	2
3	CAN_GND	3
1	CAN_SHLD (SHIELD)	5
4	CAN_H	7
2	CAN_V+	9

7 FIELDBUS TERMINATORS - only for **BC** and **BP**

The fieldbus terminators are required when output fieldbus connector has to be used as network end point.

Note: fieldbus terminators not available for ex-proof electronics

E - TRM	-	BC	-	M12	/	5PM
Terminator		Fieldbus interfaces: **BC** = CANopen **BP** = PROFIBUS DP		Connector: **M12** = from M12 output fieldbus connector **(1)** **DB9** = from DB9 connector, adapter side **(2)**		Connector: **5PM** = to BC executions **(1)** **4PF** = to BP executions **(1)** **DB9** = to DB9 connector, cable side **(2)**

(1) for on-board TES, LES, TEZ, LEZ series 40 or higher

(2) for off-board E-BM-AES, E-BM-RES, E-BM-TEB/LEB, E-BM-TES/LES, Z-BM-TEZ/LEZ, Z-BM-KZ and for on-board TID-BC

7.1 M12 terminators

E-TRM-BC-M12/5PM network CANopen terminator

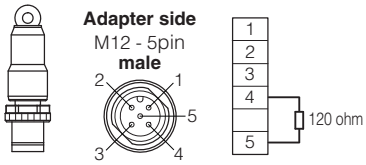

E-TRM-BP-M12/4PF network PROFIBUS DP terminator

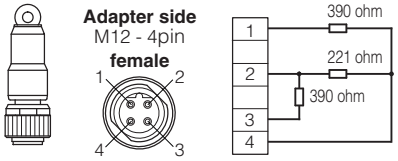

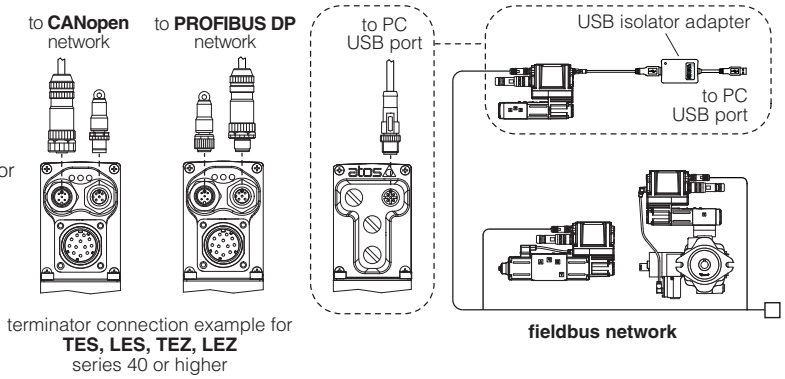

terminator connection example for **TES, LES, TEZ, LEZ** series 40 or higher

7.2 DB9 terminators

E-TRM-BC-DB9/DB9 CANopen terminator for E-A-BC-USB/DB9 USB adapter

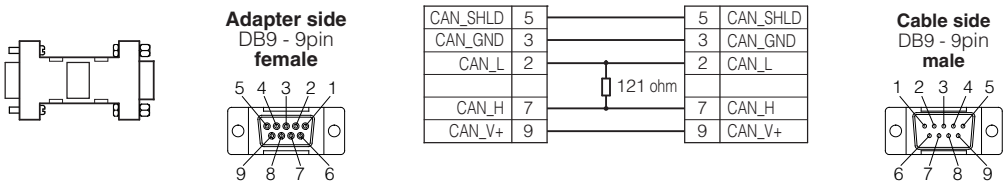

E-TRM-BP-DB9/DB9 PROFIBUS DP terminator for E-A-BP-USB/DB9 USB adapter

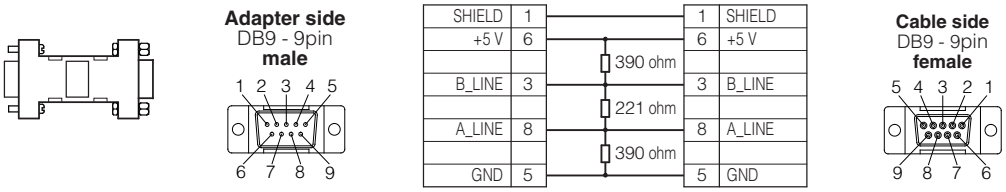

8 FIRMWARE UPDATE - only with E-SW-SETUP and Z-SW-SETUP PC software via USB cable

It is possible to update the firmware of the following valve drivers and axis controls, using proper USB communication port.
The firmware update is allowed starting from electronics series listed into the table or higher series:

Industrial electronics

E-RI-AEB s10 E-RI-AES s40	E-RI-REB s10 E-RI-RES s10	E-RI-TEB s10 E-RI-LEB s10	E-RI-TES s40 E-RI-LES s40	E-RI-TES-S s40 E-RI-LES-S s40	E-RI-TID-NP s10 **(1)**
E-BM-AES s10	E-BM-RES s10	E-BM-TEB s10 E-BM-LEB s10	E-BM-TES s10 E-BM-LES s10	E-BM-TES-S s10 E-BM-LES-S s10	
Z-RI-TEZ s40 Z-RI-LEZ s40	Z-BM-KZ s10	Z-BM-TEZ s10 Z-BM-LEZ s10			

(1) Firmware update procedure is not available for E-RI-TID-BC

Ex-proof electronics

E-RA-AES s40	E-RA-RES s40	E-RA-TES s40 E-RA-LES s40	E-RA-TES-S s40 E-RA-LES-S s40
Z-RA-TEZ s40 Z-RA-LEZ s40	Z-RA-TEZ-S s40 Z-RA-LEZ-S s40		

9 MOBILE APP COMPATIBILITY AND RECOMMENDED TOOLS SELECTION

9.1 Industrial and ex-proof electronics - compatible with Atos CONNECT mobile App

Model Code	Series	Bluetooth tools		Obsolete Bluetooth tools	
		Adapter	Cable	Adapter	Cable
AEB	10 or higher	E-A-BTH		E-A-SB-USB/BTH	E-C-SB-USB/M12
AES	40 or higher				
REB, RES	10 or higher				
TID-NP	10 or higher				
TEB, LEB	10 or higher				
TES-SN, LES-SN	40 or higher				
E-BM-TEB, E-BM-LEB	10 or higher		E-C-BTH		E-C-SB-USB/BM
E-BM-TES-SN, E-BM-LES-SN	10 or higher				

9.2 Industrial and ex-proof electronics - NOT compatible with Atos CONNECT mobile App

Model Code	Series
E-MI-AS-IR	11
E-BM-AS	10 or higher
E-BM-AES	10 or higher
E-BM-RES	10 or higher
TID-BC	10 or higher
TES, LES with p/Q control	40 or higher
E-BM-TES with p/Q control	10 or higher
TEZ, LEZ	40 or higher
Z-BM-KZ	10 or higher
Z-BM-TEZ, Z-BM-LEZ	10 or higher

10 PC SOFTWARE AND RECCOMENDED TOOLS SELECTION

10.1 Industrial and ex-proof electronics

PC software	Model Code	Series	Bluetooth		USB , Serial, Infrared		
			Adapter	Cable	Adapter	Cable	Terminator
E-SW-SETUP	E-MI-AS-IR	11			E-A-PS-USB/IR		
	E-BM-AS	10 or higher			E-A-PS-USB/DB9	E-C-PS-DB9/RJ45	
	E-BM-AES	10 or higher			E-A-SB-USB/OPT	E-C-SB-USB/BM	
	E-BM-RES	10 or higher					
	E-BM-TEB, E-BM-LEB	10 or higher	E-A-BTH	E-C-BTH			
	E-BM-TES, E-BM-LES	10 or higher					
	AES	40 or higher				E-C-SB-USB/M12	
	AEB	10 or higher					
	REB, RES	10 or higher					
	TEB, LEB	10 or higher					
	TES, LES	40 or higher					
	TID-NP	10 or higher					
	TID-BC	10 or higher			E-A-BC-USB/DB9	E-C-BC-DB9/M12	E-TRM-BC-DB9/DB9
Z-SW-SETUP	TEZ, LEZ	40 or higher	E-A-BTH		E-A-SB-USB/OPT	E-C-SB-USB/M12	
	Z-BM-KZ	10 or higher		E-C-BTH		E-C-SB-USB/BM	
	Z-BM-TEZ, Z-BM-LEZ	10 or higher					

10.2 Obsolete industrial electronics

PC software	Model Code	Series	Communication type	Adapter	Cable	Terminator
E-SW-SETUP	E-BM-TID, E-BM-LID	10	NP - fieldbus not present	E-A-SB-USB/OPT	E-C-SB-USB/BM	
	AES	30	PS - Serial	E-A-PS-USB/DB9	E-C-PS-DB9/M12	
	AERS, TERS, TES, LES	31				
	AES	30	BC - CANopen			
	AERS, TERS, TES, LES	31		E-A-BC-USB/DB9	E-C-BC-DB9/M12	E-TRM-BC-DB9/DB9
	AES	30	BP - PROFIBUS	E-A-PS-USB/DB9	E-C-PS-DB9/M12	
	AERS, TERS, TES, LES	31		E-A-BP-USB/DB9	E-C-BP-DB9/M12	E-TRM-BP-DB9/DB9
	AES	30	EH - EtherCAT	E-A-PS-USB/DB9	E-C-PS-DB9/M12	
Z-SW-SETUP	TEZ,LEZ	10	PS - Serial	E-A-PS-USB/DB9	E-C-PS-DB9/M12	
	Z-BM-KZ-PS	10 or higher			E-C-PS-DB9/DB9	
	TEZ,LEZ	10	BC - CANopen	E-A-BC-USB/DB9	E-C-BC-DB9/M12	E-TRM-BC-DB9/DB9
	TEZ,LEZ	10	BP - PROFIBUS	E-A-BP-USB/DB9	E-C-BP-DB9/M12	E-TRM-BP-DB9/DB9
	Z-BM-KZ-PS/BP	10 or higher		E-A-PS-USB/DB9	E-C-PS-DB9/DB9	

10.3 Obsolete ex-proof electronics

PC software	Model Code	Series	Communication type	Adapter	Cable	Terminator
E-SW-SETUP	AES	30	PS - Serial	E-A-PS-USB/DB9	E-C-PS-DB9/M8	
	AERS, TERS, TES, LES	31				
	AES	30	BC - CANopen	E-A-PS-USB/DB9	E-C-PS-DB9/M8	
	AERS, TERS, TES, LES	31		E-A-BC-USB/DB9	E-C-BC-DB9/RA	E-TRM-BC-DB9/DB9
	AES	30	BP - PROFIBUS	E-A-PS-USB/DB9	E-C-PS-DB9/M8	
	AERS, TERS, TES, LES	31		E-A-BP-USB/DB9	E-C-BP-DB9/RA	E-TRM-BP-DB9/DB9

Fieldbus features

BC (CANopen), BP (PROFIBUS DP), EH (EtherCAT),
EW (POWERLINK), EI (EtherNet/IP), EP (PROFINET RT/IRT)

Typical CANopen or PROFIBUS DP fieldbus network

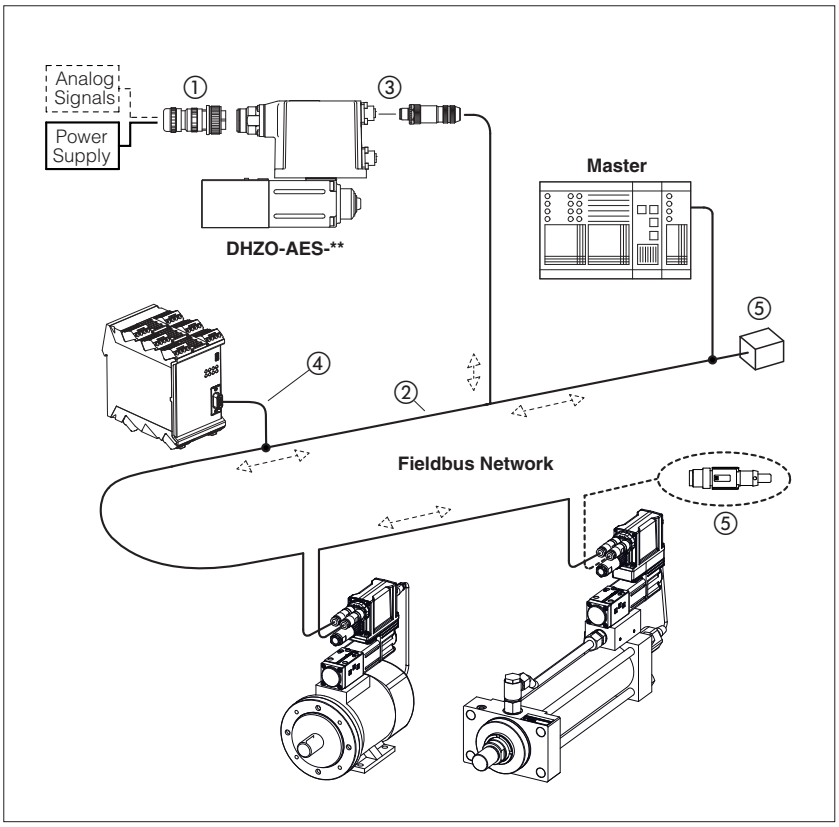

Typical EtherCAT, POWERLINK, EtherNet/IP or PROFINET RT/IRT fieldbus network

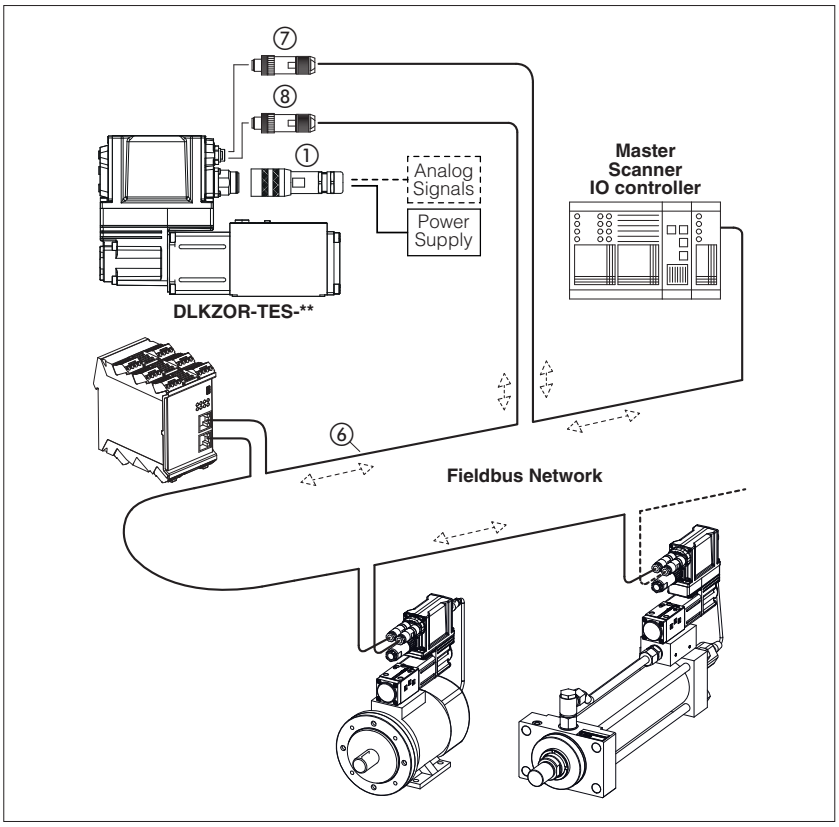

Fieldbus communication interfaces are available for valve drivers, pump drivers, axis controls and servopump drives, granting several plus:

- more information available for machine operation to enhance its performances
- improved accuracy and robustness of digital transmitted information
- costs reduction due to simpler and standardized wiring solutions
- costs reduction due to fast and simple installation and maintenance
- direct integration into machine's communication networks

These executions allow to operate valve drivers, pump drivers, axis controls and servopump drives through fieldbus or using the analog signals on main connector ①.

Fieldbus distributed-control

Fieldbus communication allows to share all the available information of the valve drivers, pump drivers, axis controls and servopump drives (reference, monitor, etc).
This distributed-control design allows to implement powerful machines functionalities for tuning, diagnostic, maintenance, etc.

CANopen and PROFIBUS DP networks consist of a common cable (2 twisted wire, ②) for digital communication: several devices (node ③) can be connected to this main cable by means of short cable branches ④.
The two endpoints of the main cable must be terminated with specific devices (terminator, ⑤) to dissipate the communication signal's energy thus preventing interferences and degradations of fieldbus transmission.

EtherCAT, POWERLINK, EtherNet/IP and PROFINET RT/IRT networks consist in a Ethernet common cable (4 twisted wire, ⑥) for digital communication. All slave, adapter and IO device have always the double connector for signal input ⑦ and signal output ⑧.
The main Ethernet cable starting from the master, scanner and IO controller has to be connected to the slave, adapter and IO device input connector.
The slave, adapter and IO device output connector has to be connected to the next slave, adapter and IO device input connector.

1 CANopen features for BC executions

Physical

Serial input format	Industrial field-bus with optical insulation type CAN-Bus ISO11898
Transmission rate	Transmission rates from 10 Kbit/s to 1 Mbit/s
Max node	32 per segment without repeater; 127 per segment with repeater

Communication Protocol

Data Link Layer	DS301 V4.2.0 - based on CAN standard frame with 11-bit identifier
Device Profile	DS408 - Fluid Power Technology (EN50325-4) **(1)**
Device type	Slave

Startup and configuration - as per DS301 + DSP305

Boot up process	Minimum boot-up
Node setting	LSS (Layer Setting Services) **(1)**
	SDO
	E-SW-SETUP, Z-SW-SETUP and S-SW-SETUP programming software
Baudrate setting	LSS (Layer Setting Services) **(1)**
	SDO
Baudrate	10 / 20 / 50 (default) / 125 / 250 / 500 / 1000Kbit/s

Fieldbus communication diagnostic - as per DS301

Device Error	Emergency
Network Error	Node Guarding
	Heartbeat

Real-time communication - as per DS301 + DS408

RPDO	4 mappable PDOs to the valve drivers and pump drivers: AES, BM-AES, TES, BM-TES, LES, BM-LES, RES, BM-RES, PES, TID
	4 mappable PDOs to the axis controls: TEZ, BM-TEZ, LEZ, BM-LEZ, BM-KZ
	4 mappable PDOs to the servopump drives: D-MP
TPDO	4 mappable PDOs from the valve drivers and pump drivers: AES, BM-AES, TES, BM-TES, LES, BM-LES, RES, BM-RES, PES, TID
	4 mappable PDOs from the controllers: TEZ, BM-TEZ, LEZ, BM-LEZ, BM-KZ
	4 mappable PDOs from the servopump drives: D-MP
R(T)PDO types	Event Triggered, Remotely requested, Sync(cyclic) and Sync(acyclic)

Non real-time communication - as per DS301 + DS408

SDO	1 SDO (1 Server + 1 Client)

(1) Not for D-MP servopump drives

Standard references

ISO 11898
Road Vehicles – Interchange of digital information controller area network (CAN) for High-speed communication

EN50325-4
Industrial communication subsystem based on ISO 11898 (CAN) for controller device interfaces

CiA DS301
CANopen – Application Layer and Communication Profile for Industrial Systems

CiA DR303-1
Cabling and connector pin assignment

CiA DSP305 **(1)**
CANopen – Layer Setting Services and Protocol

CiA DS408 **(1)**
CANopen – Device Profile for Proportional Hydraulic Valves v 1.5.2

Programming interface
E-SW-SETUP, Z-SW-SETUP and S-SW-SETUP software using proper cable/adapter (see **GS500** and **AS800**) or CANopen master device

Configuration file
EDS (Electronic Data Sheet) enclosed in MyAtos area at www.atos.com

Manuals
E-MAN-S-BC enclosed in programming software E-SW-SETUP and in MyAtos area at www.atos.com
Z-MAN-S-BC enclosed in programming software Z-SW-SETUP and in MyAtos area at www.atos.com
S-MAN-BC enclosed in programming software S-SW-SETUP and in MyAtos area at www.atos.com

2 PROFIBUS DP features for BP executions

Physical

Serial input format	Industrial field-bus with optical insulation type PROFIBUS-DP RS485 European fieldbus standard (lev.1 – EN50170-part 2)
Transmission rate	Transmission rates from 9,6 Kbit/s to 12 Mbit/s
Max node	32 per segment without repeater; 126 node with repeater

Communication Protocol

Data Link Layer	PROFIBUS DPV0 - IEC 61158 (type 3)
Device Profile	PROFIBUS-DP Profile for Fluid Power Technology **(1)**
Device type	Slave

Startup and configuration

Boot up process	SAP 61 for sending parameter setting data SAP 62 for checking configuration data
Node setting	SAP 55 E-SW-SETUP, Z-SW-SETUP and S-SW-SETUP programming software
Baudrate setting	Automatic
Baudrate	9,6 / 19,2 / 45,45 / 93,75 / 187,5 / 500 / 1500 / 3000 / 6000 / 12000 Kbit/s

Fieldbus communication diagnostic

Device error	SAP 60

Real-time communication

PZD	Process data area of PPO telegram by Data Exchange, default SAP: cyclic transmission of standard Profibus frame **Valve drivers and pump drivers** *PPO type 3, 113, 213, 230 for:* AES, BM-AES, TES, BM-TES, LES, BM-LES, RES, BM-RES *PPO type 5, 115, 214, 240 for:* TES, BM-TES, LES, BM-LES, PES with alternated P/Q control **Note:** PPO type 213, 230, 214, 240 are customizable by user **Axis controls** *PPO type 1, 111, 121, 123 for:* TEZ, BM-TEZ, LEZ, BM-LEZ, BM-KZ *PPO type 1, 101, 103, 111, 121, 123, 223, 227 for:* TEZ, BM-TEZ, LEZ, BM-LEZ, BM-KZ with alternated P/Q control **Note:** PPO type 223, 227 are customizable by user **Servopump drives** from 0 to 10 customizable Word - INPUT from 0 to 10 customizable Word - OUTPUT
Cyclic mode	standard, sync and freeze

Non real-time communication

PKW	Parameter data area of PPO telegram by Data Exchange, default SAP: acyclic transmission of standard Profibus frame (for D-MP servopump drives, PWK part may be enabled or disabled)

(1) Not for D-MP servopump drives

Standard references

PROFIBUS profile
PROFIBUS Profile,
Fluid Power Technology,
Edition Oct. 2001

VDMA profile **(1)**
Fluid Power Technology,
Proportional Valves and
Hydrostatic Transmissions, ver 1.1

Programming interface

E-SW-SETUP, Z-SW-SETUP and S-SW-SETUP software using proper cable/adapter (see **GS500** and **AS800**) or PROFIBUS DP master device

Configuration file

GSD (General Station Description) enclosed in MyAtos area at www.atos.com

Manuals

E-MAN-S-BP enclosed in programming software E-SW-SETUP and in MyAtos area at www.atos.com
Z-MAN-S-BP enclosed in programming software Z-SW-SETUP and in MyAtos area at www.atos.com
S-MAN-BP enclosed in programming software S-SW-SETUP and in MyAtos area at www.atos.com

3 EtherCAT features for EH executions

Physical

Serial input format	Industrial fieldbus type Fast Ethernet galvanically insulated IEC 61158-2
Transmission rate	2 x 100 Mbit/s (Fast Ethernet, Full-Duplex)
Max node	65535 slaves
Ethernet Standard	ISO/IEC 8802-3 frame format
EtherType	0x88A4 according to IEEE 802.3
Cable length	0,2 - 100m (between two slave devices)
Cable type	CAT5 (4 wire twisted pair) according with T568B
Network topology	Line, tree and star
Termination	Device internally

Communication Protocol

Data Link Layer	EtherCAT use Standard Ethernet Frames: ISO/IEC 8802-3 + IEC 61784-2
Device Profile	CANopen over EtherCAT (CoE) DS408 - Fluid Power Technology **(1)** and DS402 **(2)** EN 50325-4
Device type	Slave
Supported protocol	CANopen SDO Mailbox-Interface "CoE" Network Management PDO PDO Watchdog Cycle time min 1 msec

Startup and configuration - as per DS301 + DSP305

Node setting	Automatic position addressing Device node addressing
Baudrate	100 Mbit/s (Automatic)

Fieldbus communication diagnostic - as per DS301

Device Error	Emergency

Real-time communication - as per DS301 + DS408 + DS402

RPDO	4 PDOs messages to the valve drivers, pump drivers, axis controls and servopump drives (up to 32 byte for each PDO)
TPDO	4 PDOs messages from the valve drivers, pump drivers, axis controls and servopump drives (up to 32 byte for each PDO)
R(T)PDO types	Remotely requested

Non real-time communication - as per DS301 + DS408 + DS402

SDO	1 SDO (1 Server + 1 Client)

(1) Not for D-MP servopump drives
(2) Only for D-MP servopump drives

Standard references

ISO 11898
Road Vehicles – Interchange of digital information controller area network (CAN) for High-speed communication

EN 50325-4
Industrial communication subsystem based on ISO 11898 (CAN) for controller device interfaces

CiA DS301
CANopen – Application Layer and Communication Profile for Industrial Systems

CiA DSP305
CANopen – Layer Setting Services and Protocol

CiA DS408 **(1)**
CANopen – Device Profile for Proportional Hydraulic Valves v 1.5.1

CiA DS402 **(2)**
CANopen – Device Profile for Drive and Motion Control v 4.0.0

IEC 61076-2-101
Connectors for electronic equipment
- Product Requirements -
Part 2-101: Circular connectors
- Detail specification for M12 connectors with screw-locking

IEC 61158-2
Industrial communication networks
- Fieldbus specification -
Part 2: Physical layer specification and service definition

IEC 61784-2
Industrial communication networks
- Profiles -
Part 2: Additional fieldbus profiles for real-time networks based on ISO/IEC 8802-3

Programming interface
E-SW-SETUP, Z-SW-SETUP and S-SW-SETUP software using proper cable/adapter (see **GS500** and **AS800**) or EtherCAT master device

Configuration file
XML (Extensible Markup Language) enclosed in MyAtos area at www.atos.com

Manuals
E-MAN-S-EH enclosed in programming software E-SW-SETUP and in MyAtos area at www.atos.com
Z-MAN-S-EH enclosed in programming software Z-SW-SETUP and in MyAtos area at www.atos.com
S-MAN-EH enclosed in programming software S-SW-SETUP and in MyAtos area at www.atos.com

4 POWERLINK features for EW executions - not available for servopump drives

Physical

Serial input format	Industrial fieldbus type Fast Ethernet galvanically insulated IEC 61158-2
Transmission rate	2 x 100 Mbit/s (Fast Ethernet, Half-Duplex)
Max node	239 slaves
Ethernet Standard	ISO/IEC 8802-3 frame format
EtherType	0x88AB according to IEEE 802.3
Integrated Hub	
Cable length	0,2 - 100m (between two slave devices)
Cable type	CAT5 (4 wire twisted pair) according with T568B
Network topology	Line, tree, star, daisy chain, ring structure or any combination of these topologies
Ethernet Hub	Integrated with 2 ports: - one led for Link/Activity indicator (on each port) - one bicolor led Status/Error indicator

Communication Protocol

Data Link Layer	POWERLINK use Standard Ethernet Frames: ISO/IEC 8802-3 + IEC 61784-2
Comm. Profile	EPSG DS 301 v1.2
Device Profile	CANopen over Ethernet based on DS408 - Fluid Power Technology
Device type	Slave - supported features: - Ethernet POWERLINK v2.0 - Ring Redundancy - Support PollRsponse Chaining - Support Multiplexing - Cycle time min 200 µsec - SDO Multiple Parameter Read/Write

Startup and configuration (as per EPSG DS301 + EPSG DS 302-A/B/C/D/E)

Node setting	E-SW-SETUP and Z-SW-SETUP programming software
Baudrate	100 Mbit/s (Automatic)

Fieldbus communication diagnostic

Custom parameters mappable on TPDO for emergency diagnosis

Real-time communication (as per EPSG DS301 + DS408)

RPDO	1 PDO message to the driver (max number of of mapping parameters is Device specific)
TPDO	1 PDO message from the driver (max number of of mapping parameters is Device specific)

Standard references

EPSG DS301
Ethernet POWERKLINK
Communication Profile Specification v 1.2

EPSG DS302-A/B/C/D/E
Ethernet POWERKLINK
Part A: High Availability v1.1
Part B: Multiple ASnd v1.0
Part C: PollResponse Chaining v1.0
Part D: Multiple PReq/PRes v1.0
Part E: Dynamic Node Allocation v1.0

EPSG DS311
Ethernet POWERKLINK
XML Device Description v 1.0

CiA DS408
CANopen – Device Profile for Proportional Hydraulic Valves v 1.5.1

IEC 61076-2-101
Connectors for electronic equipment
- Product Requirements -
Part 2-101: Circular connectors
- Detail specification for M12 connectors with screw-locking

IEC 61158-2
Industrial communication networks
- Fieldbus specification -
Part 2: Physical layer specification and service definition

IEC 61784-2
Industrial communication networks
- Profiles -
Part 2: Additional fieldbus profiles for real-time networks based on ISO/IEC 8802-3

IEC 61784-3
Industrial communication networks
- Profiles -
Part 3: Functional safety fieldbuses - General rules and profile definitions

IEC 61158-300/400/500/600
Industrial communication networks
- Fieldbus specifications -
Part 300: Data Link Layer service definition
Part 400: Data Link Layer protocol specification
Part 500: Application Layer service definition
Part 600: Application Layer protocol specification

ISO 15745-1
Industrial automation systems and integration - Open systems application integration framework -
Part 1: Generic reference description

Programming interface

E-SW-SETUP, Z-SW-SETUP software using proper cable/adapter (see **GS500** and **AS800**) or POWERLINK master device

Configuration file

XDD (XML Device Description) enclosed in MyAtos area at www.atos.com

Manuals

E-MAN-S-EW enclosed in programming software E-SW-SETUP and in MyAtos area at www.atos.com
Z-MAN-S-EW enclosed in programming software Z-SW-SETUP and in MyAtos area at www.atos.com

5 EtherNet/IP features for EI executions - not available for servopump drives

Physical

Ethernet Standard	ISO/IEC 8802-3 frame format
EtherType	0x08E1 according to IEEE 802.3
Transmission rate	10/100 Mbit Full/Half-Duplex
Integrated	2-port switch
Cable length	max 100m
Cable type	CAT5 (4 wire twisted pair) according with T568B
Network topology	Device Level Ring (DLR), linear, star structure
Ethernet switch	integrated with two ports
Led indicator	2 led for Link/Activity indicator (on each port) and 1 bicolor led for Status/Error indicator

Communication Protocol

ODVA CIP Object Model

ODVA CIP Object library for Generic Device Profile

- Identity Object (0X01)
- Message Router Object (0x02)
- Assembly Object (0x04)
- Connection Manager Object (0x06)
- Parameter Object (0x0F)
- DLR Object (0x47)
- QoS Object (0x48h)
- Port Object (0xF4)
- TCP/IP Object (0xF5)
- Ethernet Link Object (0xF6)

Valve parameters accessible via Vendor Specific Object 0xA2

IP address setting (range 0.0.0.0 - 255.255.255.255):

- TCP/IP Object (0xF5)
- DHCP
- Auxiliary USB communication + Atos Software

I/O Adapter and Explicit Message Server device type

Cyclic data transmission via Implicit Messages (transport class 1)

- Minimum RPI for Implicit Messages 1ms
- Total number of supported class 1 connections: 4
- Up to 5 parameters and 20 bytes for each connection
- Trigger types: Cyclic CoS

Acyclic data transmission via Connected and Unconnected Explicit Messages (transport class 3)

- Minimum RPI for Explicit Messages 100ms
- No. of simultaneous Class 3 connections: 6

Standard references

IEC 61918
Industrial communication networks
- Installation of communication networks in industrial premises

IEC 61076-2-101
Connectors for electronic equipment
- Product Requirements -
Part 2-101: Circular connectors
- Detail specification for M12 connectors with screw-locking

IEC 61158-1
Industrial communication networks
- Fieldbus specification -
Part 1: Overview and guidance for the IEC 61158 and IEC 61784 series

IEC 61158-2
Industrial communication networks
- Fieldbus specification -
Part 2: Physical layer specification and service definition

IEC 61784-1
Industrial communication networks
- Profiles -
Part 1: Fieldbus profile

IEC 61784-2
Industrial communication networks
- Profiles -
Part 2: Additional fieldbus profiles for real-time networks based on ISO/IEC 8802-3

IEC 61784-3
Industrial communication networks
- Profiles -
Part 3: Functional safety fieldbuses - General rules and profile definitions

IEC 61784-5-2
Industrial communication networks
- Profiles -
Part 5-2: Installation of fieldbuses - Installation profiles for CPF 2

ISO 15745-4
Industrial automation systems and integration - Open systems application integration framework -
Part 4: Reference description for Ethernet-based control systems

Programming interface

E-SW-SETUP, Z-SW-SETUP software using proper cable/adapter (see **GS500** and **AS800**) or EtherNet/IP scanner device

Configuration file

EDS (Electronic Data Sheet) enclosed in MyAtos area at www.atos.com

Manuals

E-MAN-S-EI enclosed in programming software E-SW-SETUP and in MyAtos area at www.atos.com

Z-MAN-S-EI enclosed in programming software Z-SW-SETUP and in MyAtos area at www.atos.com

6 PROFINET RT/IRT features for EP executions

Physical

Ethernet Standard	ISO/IEC 8802-3 frame format
EtherType	0x8892 according to IEEE 802.3
Transmission rate	100 Mbit Full-Duplex
Integrated	2-port switch
Cable length	max 100m
Cable type	CAT5 (4 wire twisted pair) according with T568B
Network topology	line, star, tree and ring structure
Ethernet switch	integrated with two ports
Led indicator	2 led for Link/Activity indicator (on each port) 1 bicolor led for Status/Error indicator **(1)**

Communication Protocol

Data Link Layer	PROFINET use Standard Ethernet Frames: ISO/IEC 8802-3 + IEC 61784-2
Device type	IO device - supported features: - complies with PROFINET IO conformance Class A, B, C - Acyclic parameter Channel - Real Time (RT) and Isochronous Real Time (IRT) communication - Up to 8 input/output parameters for real time data exchange for valve drivers, pump drivers, axis controllers - Up to 10 input/output parameters for real time data exchange for servopump drives - PROFINET specific diagnostic support - Media Redundancy Protocol (MRP) - DCP Discovery and Configuration Protocol supported - Identification & Maintenance (I&M) - Cycle time min: 1 msec [RT] , 250 µsec [IRT]

Startup and configuration

Address setting	IP Address and Station Name are assigned automatically by IO controller (e.g. Discovery and Configuration Protocol)
Baudrate	100 Mbit/s (Automatic)

Fieldbus communication diagnostic

Custom parameters mappable on real time communication for emergency diagnosis

Real-time communication

Modular config	for valve drivers and pump drivers: AES, BM-AES, TES, BM-TES, LES, BM-LES, RES, BM-RES, PES - up to 5 input parameters for real time data exchange - up to 5 output parameters for real time data exchange for axis controls: TEZ, BM-TEZ, LEZ, BM-LEZ, BM-KZ - up to 8 input parameters for real time data exchange - up to 8 output parameters for real time data exchange for servopump drives: D-MP - up to 10 input configurable parameters for real time data exchange - up to 10 output configurable parameters for real time data exchange

(1) Not for D-MP servopump drives

Standard references

IEC 61918
Industrial communication networks
- Installation of communication networks in industrial premises

IEC 61076-2-101
Connectors for electronic equipment
- Product Requirements -
Part 2-101 **(1)**: Circular connectors
- Detail specification for M12 connectors with screw-locking

IEC 61158-1
Industrial communication networks
- Fieldbus specification -
Part 1: Overview and guidance for the IEC 61158 and IEC 61784 series

IEC 61158-2
Industrial communication networks
- Fieldbus specification -
Part 2: Physical layer specification and service definition

IEC 61158-5-10
Industrial communication networks
- Fieldbus specification -
Part 5-10: Application layer service definition – Type 10 elements

IEC 61784-1
Industrial communication networks
- Profiles -
Part 1: Fieldbus profile

IEC 61784-2
Industrial communication networks
- Profiles -
Part 2: Additional fieldbus profiles for real-time networks based on ISO/IEC 8802-3

IEC 61784-5-3
Industrial communication networks
- Profiles -
Part 5-3: Installation of fieldbuses - Installation profiles for CPF 3

Programming interface

E-SW-SETUP, Z-SW-SETUP and S-SW-SETUP software using proper cable/adapter (see **GS500** and **AS800**) or PROFINET controller

Configuration file

GSDML (GSD Markup Language) enclosed in MyAtos area at www.atos.com

Manuals

E-MAN-S-EP enclosed in programming software E-SW-SETUP and in MyAtos area at www.atos.com
Z-MAN-S-EP enclosed in programming software Z-SW-SETUP and in MyAtos area at www.atos.com
S-MAN-EP enclosed in programming software S-SW-SETUP and in MyAtos area at www.atos.com

IO-Link features

Point-to-point digital communication protocol

Typical IO-Link network

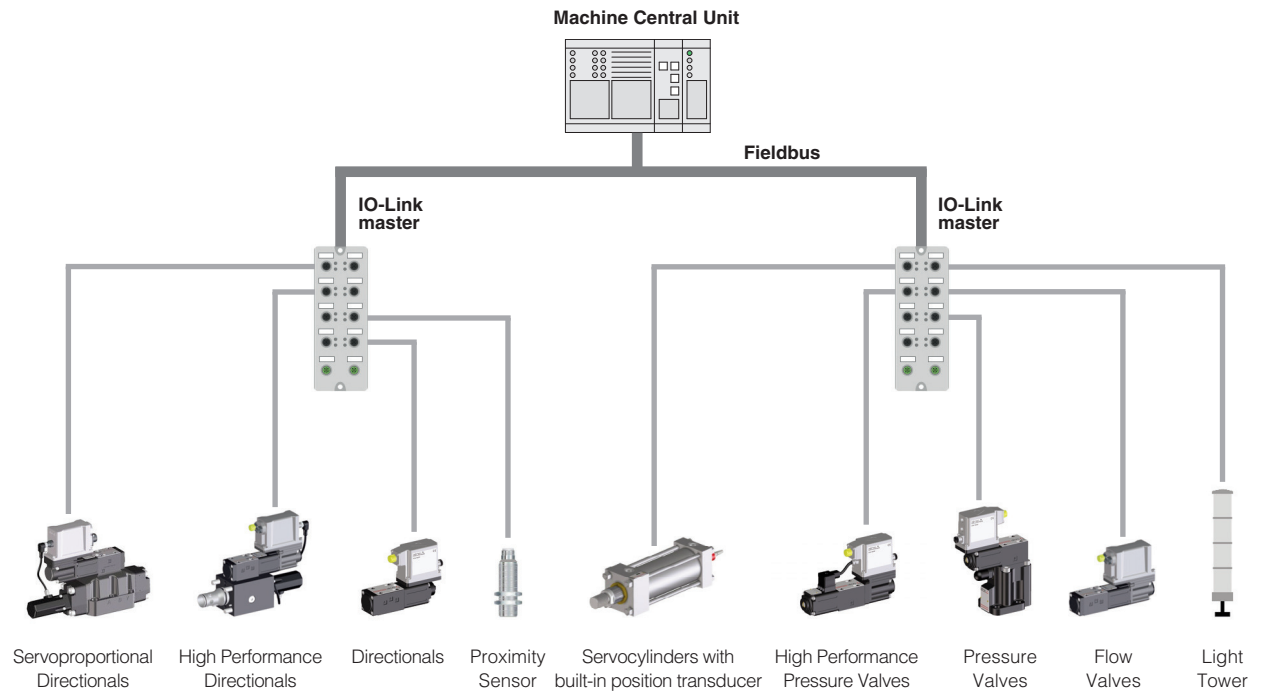

1 GENERAL DESCRIPTION

IO-Link is a standard digital communication used for connecting digital sensors and actuators to the fieldbus network.

An IO-Link system consits of the following components:

- IO-Link master
- IO-Link devices (valves, transducers,...)
- Standard unshielded molded cables

Each device is connected to a single port of the master via low cost unshielded cables (point-to-point communication) and the master works as a hub establishing the communication between the devices and the machine central unit which manages the automation system. IO-Link masters support various fieldbuses for the communication with the machine central unit (CANopen, PROFIBUS, EtherCAT, POWERLINK, PROFINET, EtherNet/IP, …).

The IO-Link system offers several advantages as a digital communication interface:

- low cost cables with standarized wiring
- improved accuracy and robustness of digital transmitted information
- more information available for machine optimization, diagnostics and troubleshooting
- dynamic change of device parameters for increasing machine flexibility and performances
- automatic device identification and parametrization for simplifying commissioning and maintenance operations

2 IO-Link features for digital drivers in IL execution

Physical

Serial input format	24V pulse modulation
Transmission rate	230.4 kbit/s (COM3)
Port Class	Class B
Network Topology	Point-to-point connection
Cable lenght	Up to 20 m
Cable type	5 wires, unshielded

Communication Protocol

Data Link Layer	M sequence type: - preoperate mode = TYPE_0 - operate mode = TYPE 2_V
Device type	Device - supported features: - Cyclic transmission of process data - Acyclic transmission of parameters - Acyclic transmission of identification data - Acyclic transmission of diagnostic events

Configuration and Commissioning

- setting via Atos PC software
- setting via IO-Link / USB adapter and configuration tool
- setting via IO-Link Master and configuration tool
- setting via Machine Central Unit

Cyclic transmission of process data

Cycle time	Min 2 ms
Number input data	2 word
Number output data	2 word

Diagnostic Events

Update time	2 ms
Event category type	Error, Warning, Notification
Status code	Type 2 with details
Number of event	Max 6 concurrent errors

Standard references

IEC 61131-9
Programmable controllers - Part 9:
Single-drop digital communication interface for small sensor and actuators (SDCI)

IO-Link
Interface and System Specifications 1.1.3

IO-Link
Test Specifications 1.1.3

Programming interface

E-SW-SETUP software using proper cable/adapter (see tech table **GS500**)

Configuration file

IODD (IO Device Description), enclosed in MyAtos area at www.atos.com

Manuals

E-MAN-S-IL enclosed in programming software E-SW-SETUP and in MyAtos area at www.atos.com

Mounting surfaces for electrohydraulic valves

ISO standard, for directional, pressure and flow control valves plus pressure switches

1 **ISO 4401: 2005 - for directional, pressure and flow control valves**

Mounting surfaces dimensions [mm]	ISO code / ports size [mm]	Valve type		
		industrial	**ex-proof**	**stainless steel**
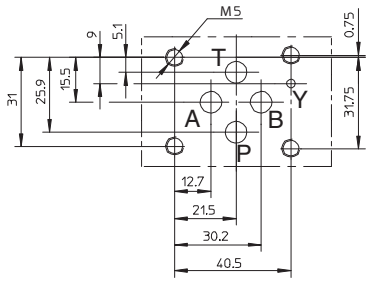 **Y port only for 4401-03-03-0-05**	**4401-03-02-0-05** P, A, B, T = Ø 7,5 max without Y port	DH* DLOH / DLOK DLEH / DLEHM QV-06 RZMO RZGO DHZE / DHZO DLHZO QVH* H* (modular)	DHA / DHW DLAH / DLWH RZMA RZGA DHZA DLHZA QVHZA	DHAX(S) DLAHX(S) DLAHMX(S) DLAHPX(S) DLHPX(S) HMPX(S)
	4401-03-03-0-05 P, A, B, T = Ø 7,5 max Y = Ø 3,3 max	DHZO / Y DLHZO / Y	DHZA / Y DLHZA / Y	

Mounting surfaces dimensions [mm]	ISO code / ports size [mm]	Valve type	
		industrial	**ex-proof**
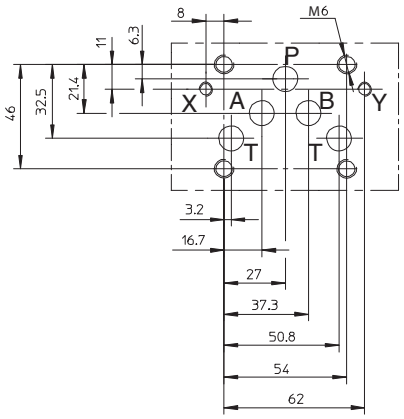 **X and Y port only for 4401-05-05-0-05**	**4401-05-04-0-05** P, A, B, T = Ø 11,2 max without X and Y port	DKE DKZOR DLKZOR QVKZOR K* (modular)	DKZA DLKZA QVKZA
	4401-05-05-0-05 P, A, B, T = Ø 11,2 max X, Y = Ø 6,3 max	DKE/Y DKZOR / Y DLKZOR / Y DP-1* DPH-1* DPZO-*-1*	DKZA / Y DLKZA / Y DPHA-1*/ DPHW-1 DPZA-*1

Mounting surfaces dimensions [mm]	ISO code / ports size [mm]	industrial	ex-proof
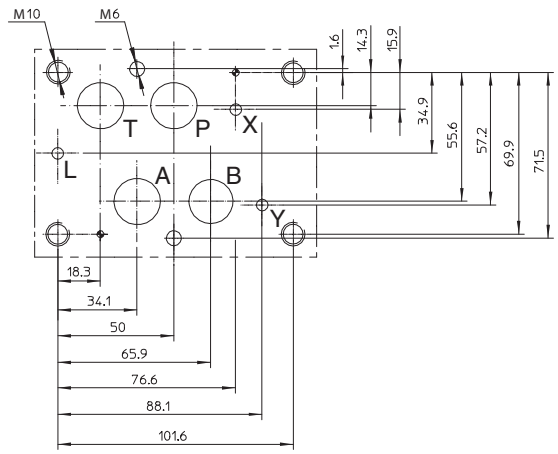	**4401-07-07-0-05** P, A, B, T = Ø 17,5 max Y = Ø 6,3 max	DP-2* DPH*-2* DPZO-*-2* JP*-2* (modular)	DPHA-2 / DPHW-2 DPZA-*-2

Mounting surfaces dimensions [mm]	ISO code / ports size [mm]	Valve type	
		industrial	ex-proof
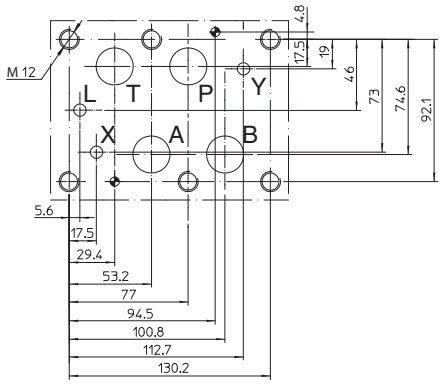	**4401-08-08-0-05** P, A, B, T = Ø 25 max X, Y, L = Ø 11,2 max	DP-4* DPH*-4* DPZO-*-4* JP*-3* (modular)	DPHA-4 / DPHW-2 DPZA-*-4
	4401-08-08-0-05 P, A, B, T = Ø 32 max X, Y, L = Ø 11,2 max	DPZO-*-4M*	DPZA-*-4M*
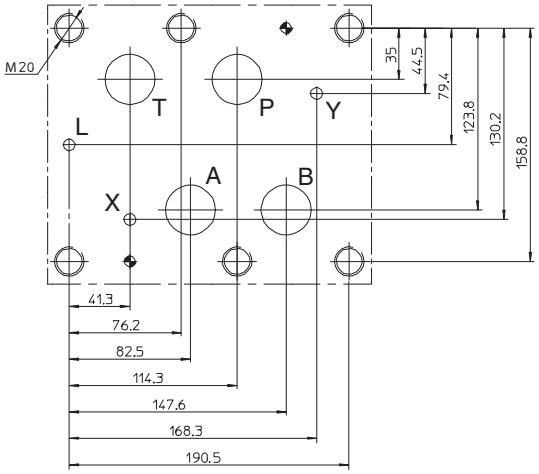	**4401-10-09-0-05** P, A, B, T = Ø 32 max X, Y, L = Ø 11,2 max	DP-6* DPH*-6* DPZO-*-6*	DPHA-6 DPZA-*-6
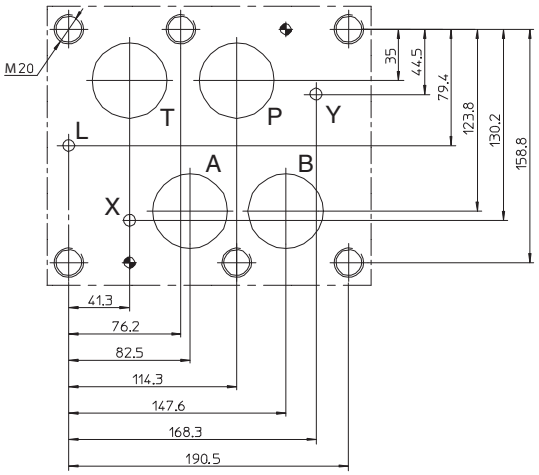	**4401-10-09-0-05** P, A, B, T = Ø 50 max X, Y, L = Ø 11,2 max	DPZO-*-8*	-

2 **ISO 6264: 2007 - for pressure relief valves**

Mounting surfaces dimensions [mm]	ISO code / ports size [mm]	Valve type	
		industrial	ex-proof
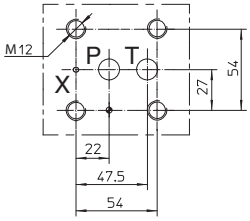	**6264-06-09-1-97** P, T = Ø 14,7 max X = Ø 4,8 max	AGAM-10 AGMZO-*-10	AGAM-10 / AO AGAM-10 / WO AGMZA-*-10
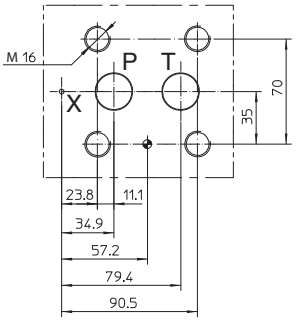	**6264-08-11-1-97** P, T = Ø 23,4 max X = Ø 6,3 max	AGAM-20 AGMZO-*-20	AGAM -20 / AO AGAM-20 / WO AGMZA-*-20
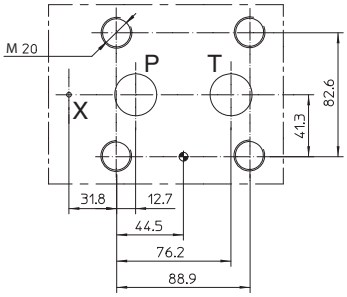	**6264-10-17-1-97** P, T = Ø 32 max X = Ø 6,3 max	AGAM-32 AGMZO-*-32	AGAM-32 / AO AGAM-32 / WO AGMZA-*-32

3 **ISO 5781: 2000 - for pressure reducing and piloted check valves**

Mounting surfaces dimensions [mm]	ISO code / ports size [mm]	Valve type	
		industrial	ex-proof
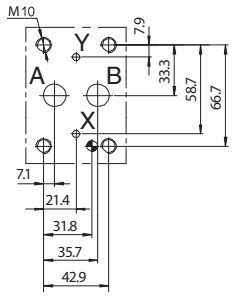	**5781-06-07-0-00** A, B = Ø 14,7 max X, Y = Ø 4,8 max	AGIS-10 AGIR-10 AGIU-10 AGRL*-10 AGRCZO-*-10	AGRCZA-*-10
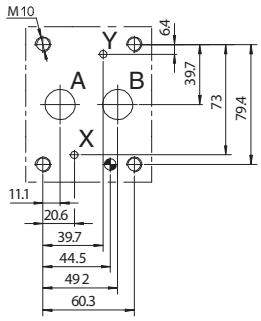	**5781-08-10-0-00** A, B = Ø 23,4 max X, Y = Ø 4,8 max	AGIS-20 AGIR-20 AGIU-20 AGRL*-20 AGRCZO-*-20	AGRZA-*-20
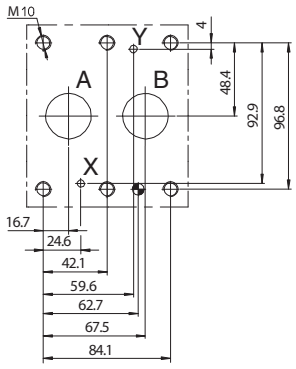	**5781-10-13-0-00** A, B = Ø 32 max X, Y = Ø 4,8 max	AGIS-32 AGIR-32 AGIU-32 AGRL*-32	-

4 **ISO 16873: 2002 - for pressure switches**

Mounting surfaces dimensions [mm]	ISO code / ports size [mm]	Valve type
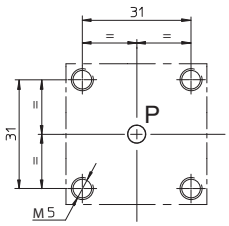	**16873-01-01-0-02** P = Ø 4 max	MAP

Mounting surfaces and cavities for cartridge valves

1 **CAVITIES DIMENSIONS for 2 WAY and 3 WAY CARTRIDGE VALVES type CART-LEH, CART-LEHM [mm]**

CAVITY for CART-LEH 2 way

cavity dimensions

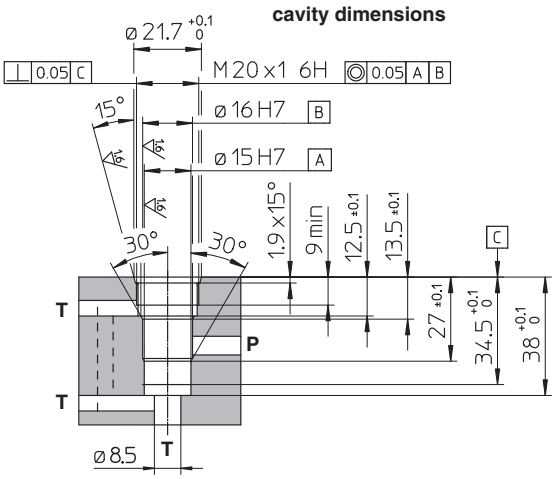

cavity edges and P, A, B, T connections

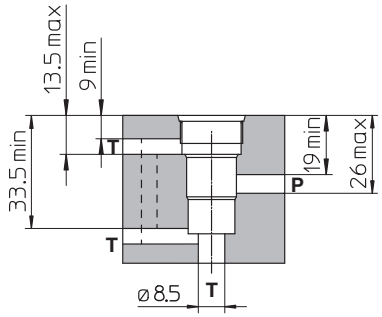

CAVITY for CART-LEH 3 way

cavity dimensions

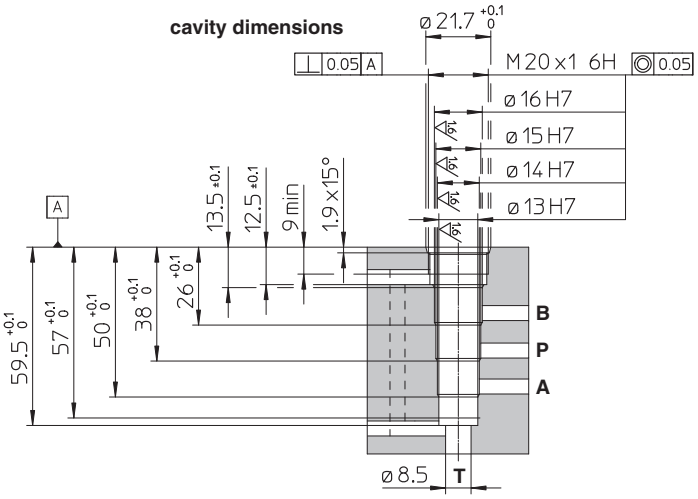

cavity edges and P, A, B, T connections

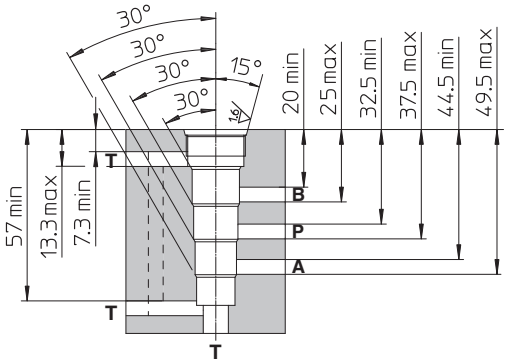

CART-LEHM 3 way

cavity dimensions

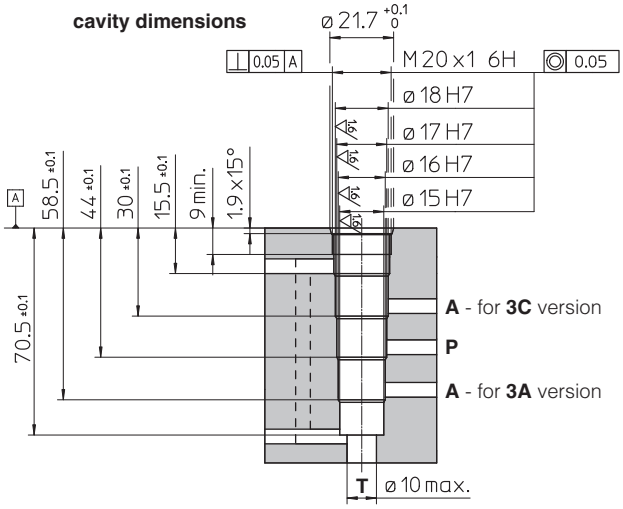

cavity edges and P, A, T connections

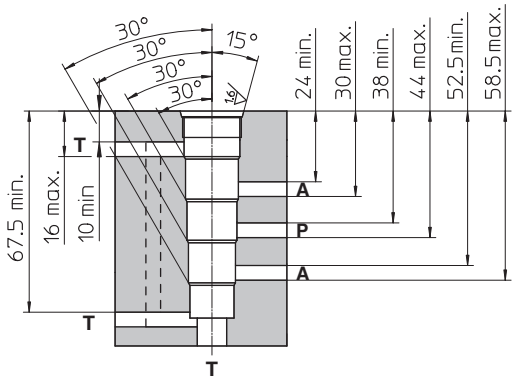

2 CAVITIES DIMENSIONS for 2 WAY and 3 WAY EX-PROOF CARTRIDGE VALVES type CART-LAH [mm]

CAVITY for CART-LAH 2 way

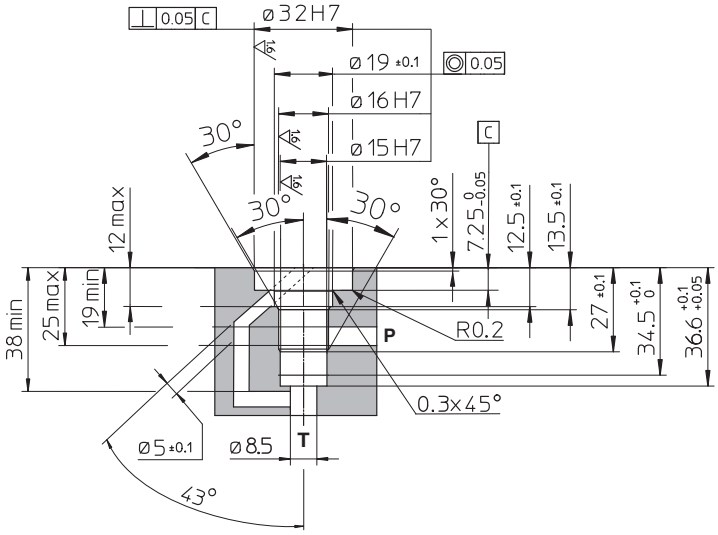

CAVITY for CART-LAH 3 way

cavity dimensions

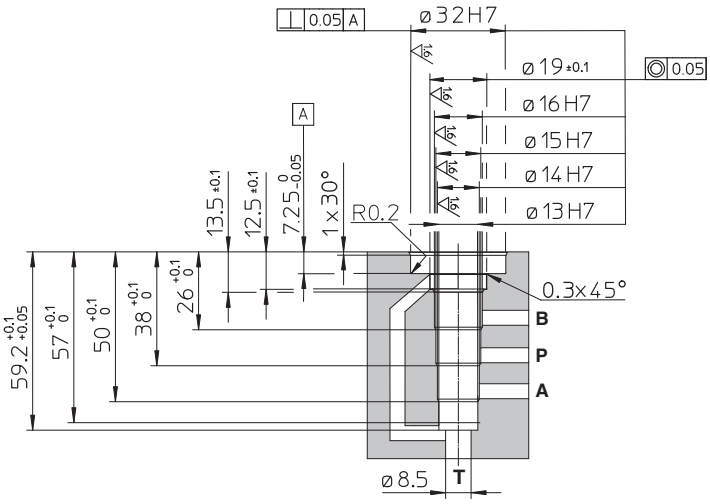

cavity edges and P, A, B, T connections

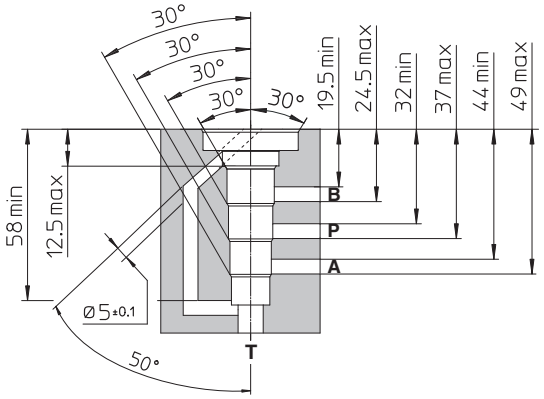

MOUNTING SURFACE for CART-LAH 2 and 3 way

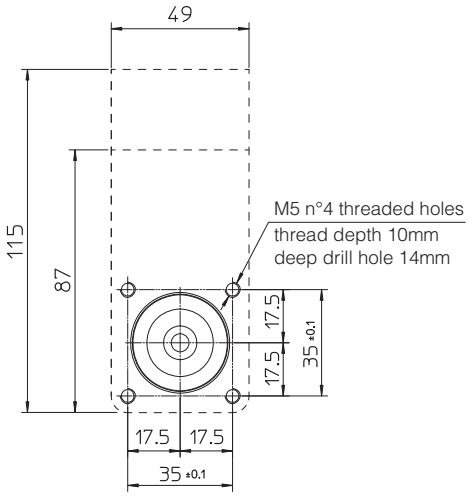

3 CAVITIES DIMENSIONS for 3 WAY EX-PROOF CARTRIDGE VALVES type CART-LAHM [mm]

CAVITY for CART-LAHM-3A

cavity dimensions

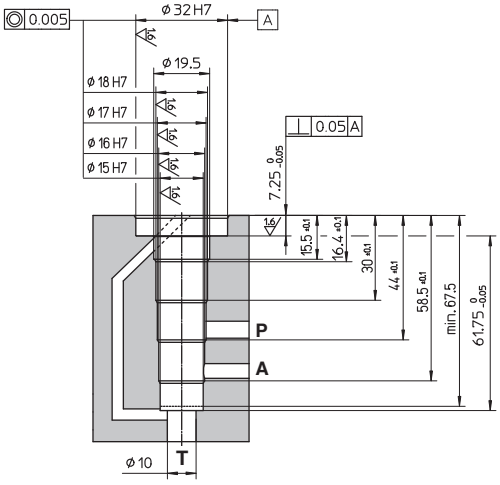

cavity edges and P, A, T connections

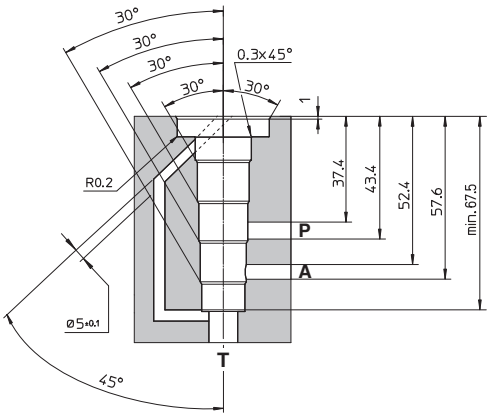

CAVITY for CART-LAHM-3C

cavity dimensions

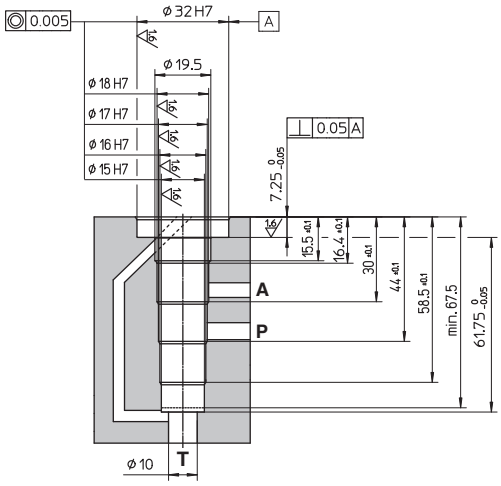

cavity edges and P, A, T connections

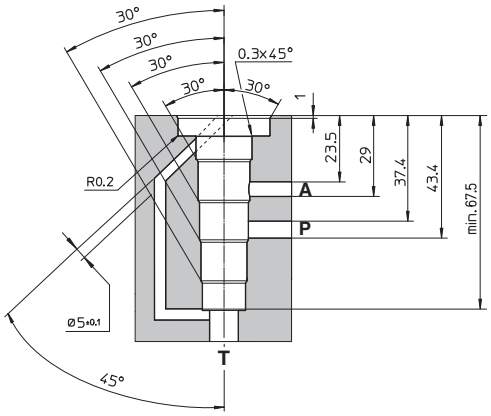

MOUNTING SURFACE for CART-LAHM 3 way

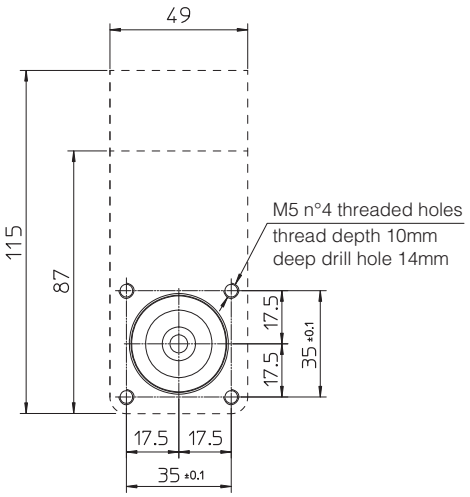

4 CAVITIES DIMENSIONS for CARTRIDGE PRESSURE RELIEF VALVES type CART [mm]

CART M-3
CART MX(S)-3

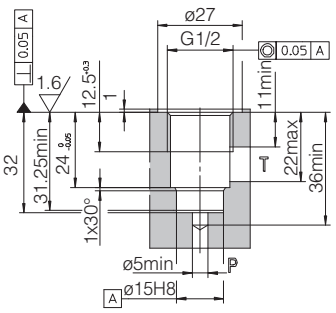

CART M-4

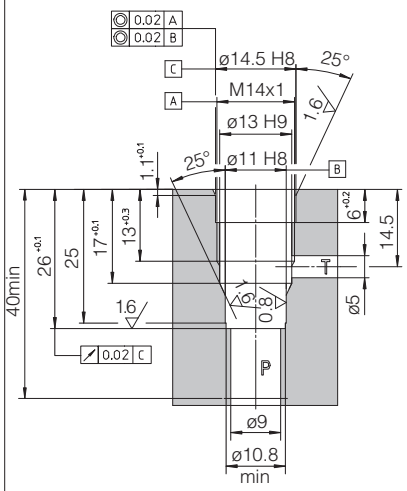

CART M-5

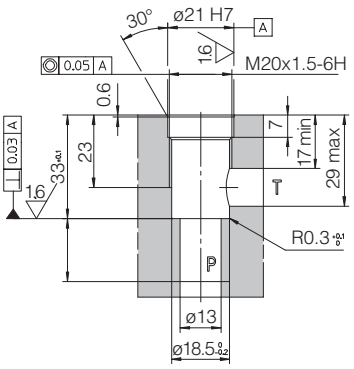

CART M-6
CART MX(S)-6

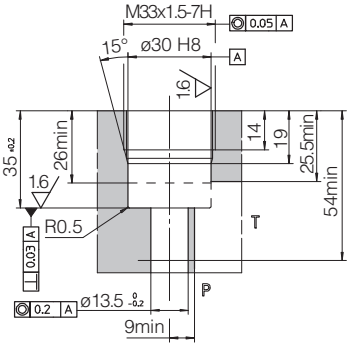

CART ARE-20
CART AREX(S)-20

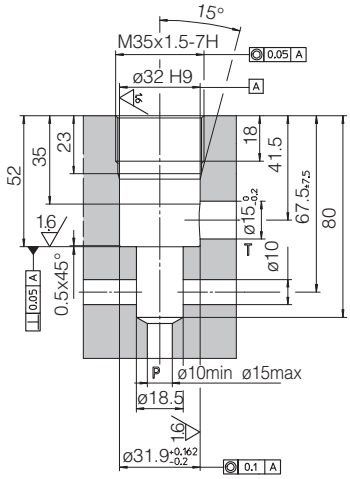

5 CAVITIES DIMENSIONS for 2 WAY SOLENOID CARTRIDGE VALVES type JO-DL [mm]

Note: cavity compatible with old cartridge series

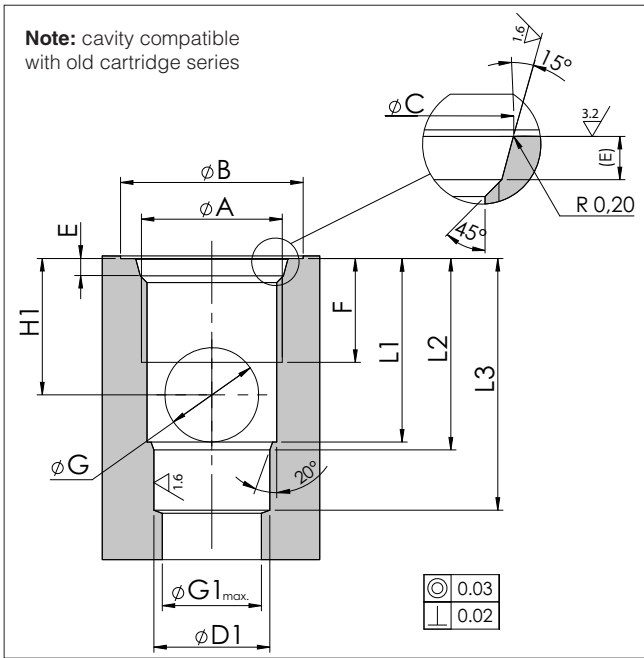

	JO-DL-4-2	JO-DL-6-2	JO-DL-10-2
A	3/4-16 UNF	7/8-14 UNF	1 5/16-12 UNF
B	26	30	42
C	$20.6^{+0.1}_{0}$	$23.9^{+0.1}_{0}$	$35.5^{+0.1}_{0}$
D1	$12.7^{+0.05}_{0}$	$15.87^{+0.05}_{0}$	$28.60^{+0.05}_{0}$
E	$2.6^{+0.3}_{0}$	$2.6^{+0.3}_{0}$	$3.3^{+0.3}_{0}$
F	13	15	20
G	9	12	19
G1	12	15	24
H1	14	18	25
L1	19.1	24.2	33.5
L2	20.5	25.5	36
L3	29	34.5	49

6 ISO 7368 COVER INTERFACE DIMENSIONS for 2 WAY and 3 WAY CARTRIDGE VALVES [mm]

Size from 16 to 63

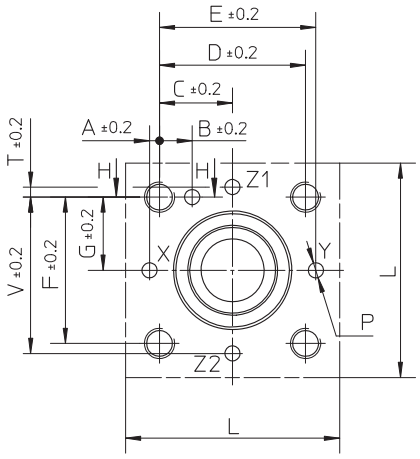

VALVE TYPE

on off
LIM
LIMX(S)
LIR
LIC
LIQV
LIDD
LIDEW
LIDBH
LIDO
LIDB
LIDR
LIDAS

proportional
LIQZO-T*
LIQZO-L* 2 way
LIQZO-L* 3 way
LIQZP-L* 2 way
LIQZP-L* 3 way
LIQZH-L* 2 way
LIQZA-L* 2 way
LIQZA-L* 3 way

Note: port Z1 and Z2 not used in LIQZ*

SEZ.H-H

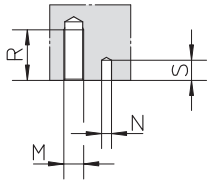

Size 80 and 100

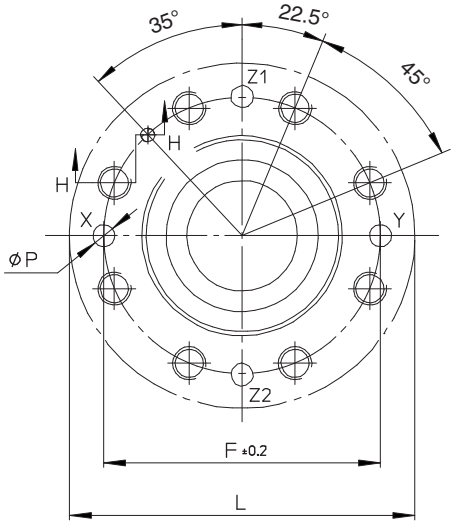

Size 125

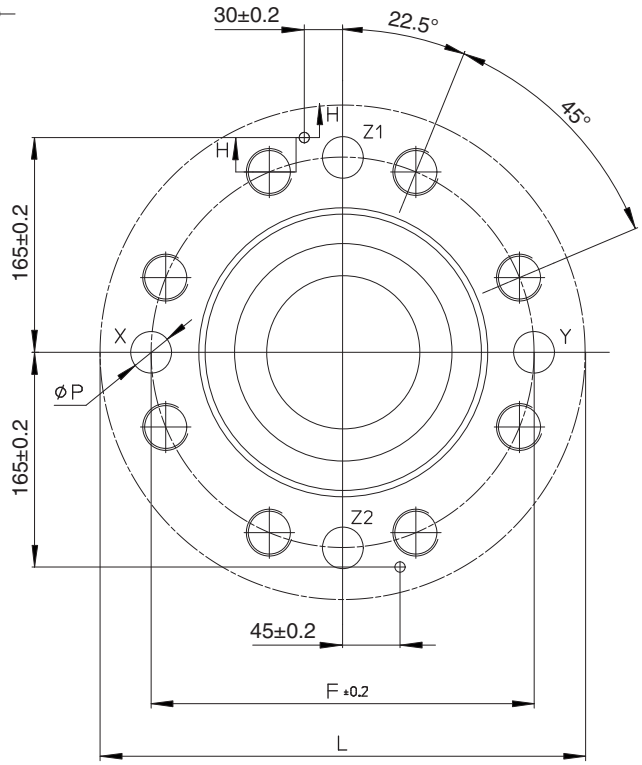

Size	A	B	C	D	E	F	G	L min	M	Ø N	P max	R	S min	T	V
16	2	12,5	23	46	48	46	23	65	M8	4	4	20	6	2	48
25	4	13	29	58	62	58	29	85	M12	6	6	30	8	4	62
32	6	18	35	70	76	70	35	102	M16	6	8	38	8	6	76
40	7,5	19.5	42.5	85	92.5	85	42,5	125	M20	6	10	46	8	7.5	92.5
50	8	20	50	100	108	100	50	140	M20	8	10	46	8	8	108
63	12.5	24.5	62.5	125	137,5	125	62.5	180	M30	8	12	66	8	12.5	137.5
80	-	-	-	-	-	Ø200	-	Ø250	M24	10	16	50	10	-	-
100	-	-	-	-	-	Ø245	-	Ø300	M30	10	20	63	10	-	-
125	-	-	-	-	-	Ø300	-	Ø380	M36	8	32	78 (64.8 min)	10		

7 ISO 7368 CAVITIES DIMENSIONS for 2 WAY CARTRIDGE VALVES [mm]

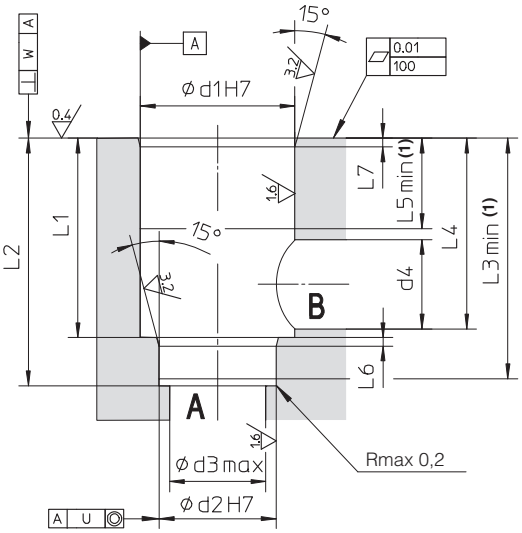

VALVE TYPE

on off

SC LI-*
SC LIX-*
LIDAS

proportional

LIQZO-T*
LIQZO-L* 2 way
LIQZP-L* 2 way
LIQZH-L* 2 way
LIQZA-L* 2 way

(1) Minimum length over which the specific surface finish and H7 tolerance shall apply

For sizes 16÷63 the dimension D4max is the difference between L4 and L5min

General Tolerances ISO 2768-mH (except chamfers and radius)

Size	ød1	ød2	ød3 max	ød4 max	L1	L2	L3	L4	L5	L6	L7	U	W
16	32	25	16	22,5	$43^{+0,1}_{0}$	$56^{+0,1}_{0}$	54	42,5	20	2	2	0,03	0,05
25	45	34	25	27	$58^{+0,1}_{0}$	$72^{+0,1}_{0}$	70	57	30	2,5	2,5	0,03	0,05
32	60	45	32	38,5	$70^{+0,1}_{0}$	$85^{+0,1}_{0}$	83	68,5	30	2,5	2,5	0,03	0,1
40	75	55	40	54,5	$87^{+0,1}_{0}$	$105^{+0,1}_{0}$	102	84,5	30	3	3	0,05	0,1
50	90	68	50	62,5	$100^{+0,1}_{0}$	$122^{+0,1}_{0}$	117	97,5	35	3	3	0,05	0,1
63	120	90	63	87	$130^{+0,1}_{0}$	$155^{+0,1}_{0}$	150	127	40	4	4	0,05	0,2
80	145	110	80	100	$175^{+0,2}_{0}$	$205^{+0,2}_{0}$	200	170,5	40	5	5	0,05	0,2
100	180	135	100	120	$210^{+0,2}_{0}$	$245^{+0,2}_{0}$	239	205,5	50	5	5	0.05	0.2
125	225	200	150	125	$257^{+0,2}_{0}$	$300^{+0,2}_{0}$	288	255	50	7	5.5	0.05	0.1

8 CAVITIES DIMENSIONS for 3 WAY CARTRIDGE VALVES [mm]

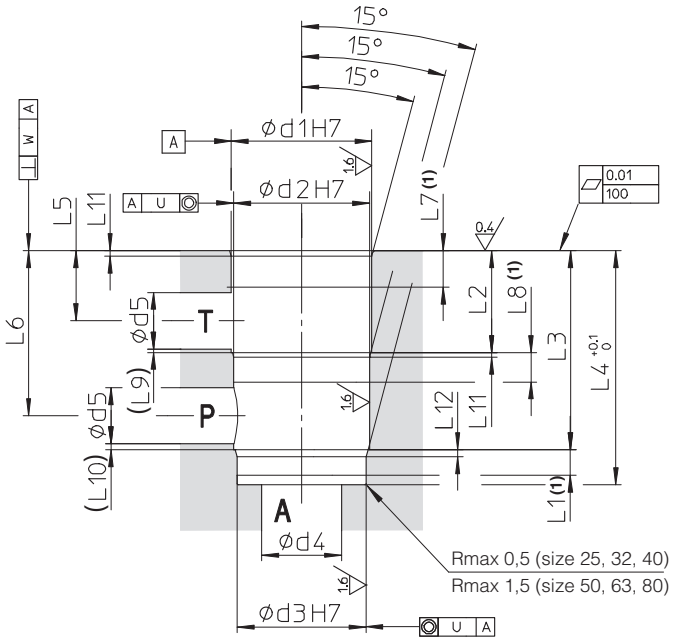

VALVE TYPE

proportional

LIQZO-L* 3 way
LIQZP-L* 3 way
LIQZA-L* 3 way

(1) Minimum length over which the specific surface finish and H7 tolerance shall apply

General Tolerances ISO 2768-mH (except chamfers and radius)

Size	ød1	ød2	ød3	ød4	ød5	L1	L2	L3	L4	L5	L6	L7	L8	(L9)	(L10)	L11	L12	U	W
25	45	43	34	20	20	12,5	56	89	103	45	78	25	15	1	1	2,5	2,5	0,03	0,05
32	60	58	55	32	24	14	43,5	85	100	30	70,5	18	15	1,5	2,5	2,5	2,5	0,03	0,05
40	75	73	55	40	30	17,5	54	105	125	36	87	21	18	3	3	3	3	0,03	0,05
50	90	87	68	50	35	18,5	87	143	165	66	122	48	18	3,5	3,5	4	3	0,03	0,05
63	120	116	90	63	48	26,5	85	165	195	57	137	33	28	4	4	4	4	0,03	0,05
80	145	140	110	80	60	26,5	125	215	245	90	180	60	25	5	5	5	5	0,03	0,05

Operating and maintenance information for proportional valves

directional, flow, pressure controls
safety valves conforming to Machine Directive 2006/42/EC

This operating and maintenance information applies to Atos proportional directional, flow, pressure control valves and safety proportional valves.
It is intended to provide useful guidelines to avoid risks when the valves are installed in the hydraulic system.
It contains important information on the safe and proper installation, commissioning, operation transport and maintenance of the products.
The prescriptions included in this document must be strictly observed to avoid damages and injury.
The respect of this operating and maintenance information grants an increased working life, trouble-free operation and thus reduced repairing costs.

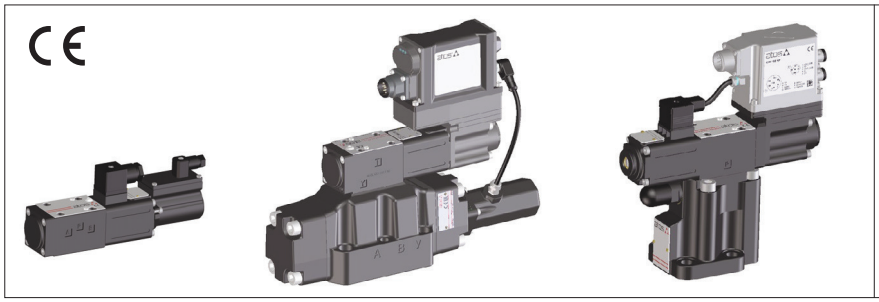

1 SYMBOL CONVENTIONS

Following symbols are used in this documentation to evidence particular risks to be carefully avoided.
In the following are listed the symbol conventions with their meaning, in case of non-compliance with this operating and maintenance information.

WARNING	Death or serious injury could occur	risk classes to ANSI Z535.6 / ISO 3864
CAUTION	Minor or moderate injury could occur	
NOTICE	Property damage could occur	
SAFETY CERTIFIED	Notes relevant to safety proportional valves	
	Information to be observed	

2 GENERAL NOTES

This document is intended for machine manufacturers, assemblers and system end-users.

WARNING
Personal injury and property damage may be caused by incorrect use of the products!
The products have been designed for use in industrial environments and may only be used in the appropriate way.

Before using Atos proportional valves, the following requisites must be met to ensure appropriate use of the products:

- personnel who uses Atos proportional valves must first read and understand the operating and maintenance information, particularly the Safety Notes in section 5.
- the products must remain in their original state, no modifications are permitted
- it is not permitted to decompile software products or alter source codes
- damaged or faulty valves must not be installed or put into operation
- make sure that the products have been installed as described in section 6 and 7

2.1 Warranty

The expiration of warranty results from the following operations:

- incorrect assembly and commissioning
- improper use, see 5.2
- improper handling and storage, see 9.4
- modification of the original condition

3 CERTIFICATION

Atos range of proportional directional valves, provides functional safety options **/U** and **/K** .
They are designed to accomplish a safety function, intended to reduce the risk in process control systems.
The valves are **TÜV certified** in compliance with **IEC 61508 up to SIL 3 and ISO 13849 up to category 4, PL e**

4 PRODUCT IDENTIFICATION EXAMPLES - nameplates

4.1 Direct valve with on-board driver/axis card - DLHZO-TES example

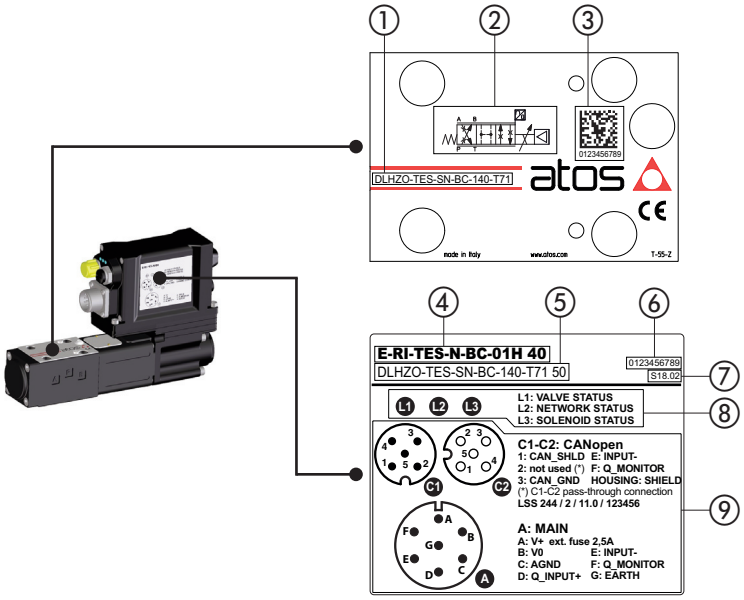

① Valve code
② Hydraulic symbol (simplified)
③ Valve serial number

④ Digital driver code
⑤ Valve code
⑥ Digital driver serial number
⑦ Digital driver factory firmware version
⑧ Diagnostic led description
⑨ Connectors pinout

4.2 Piloted valve with on-board driver - AGMZO-AES example

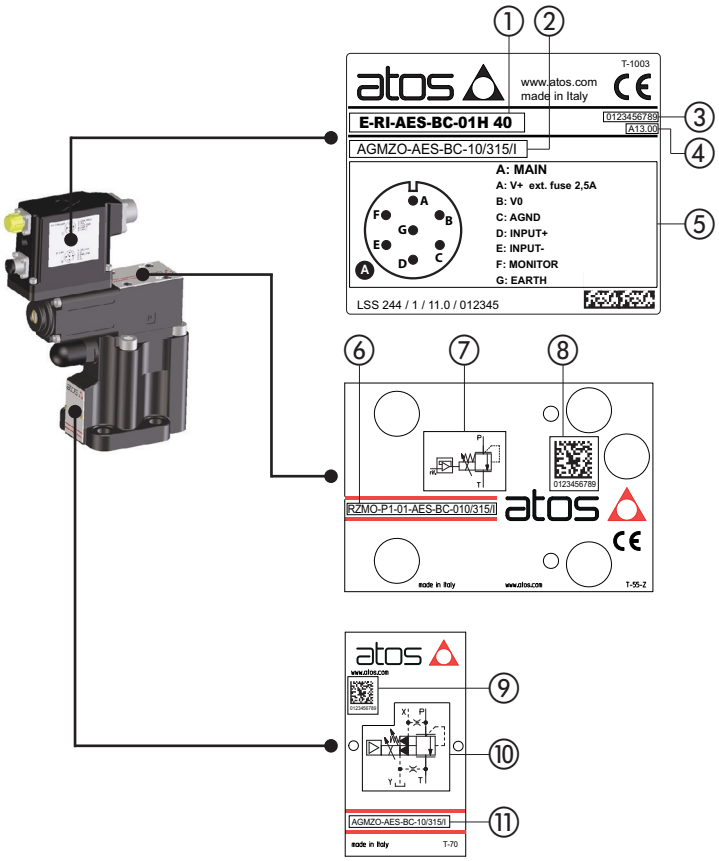

① Digital driver code
② Valve code
③ Digital driver serial number
④ Digital driver factory firmware version
⑤ Connectors pinout

⑥ Pilot valve code
⑦ Pilot hydraulic symbol (simplified)
⑧ Pilot valve serial number

⑨ Valve serial number
⑩ Hydraulic symbol (simplified)
⑪ Valve code

4.3 **Piloted valve with on-board driver/axis card** - DPZO-LES example

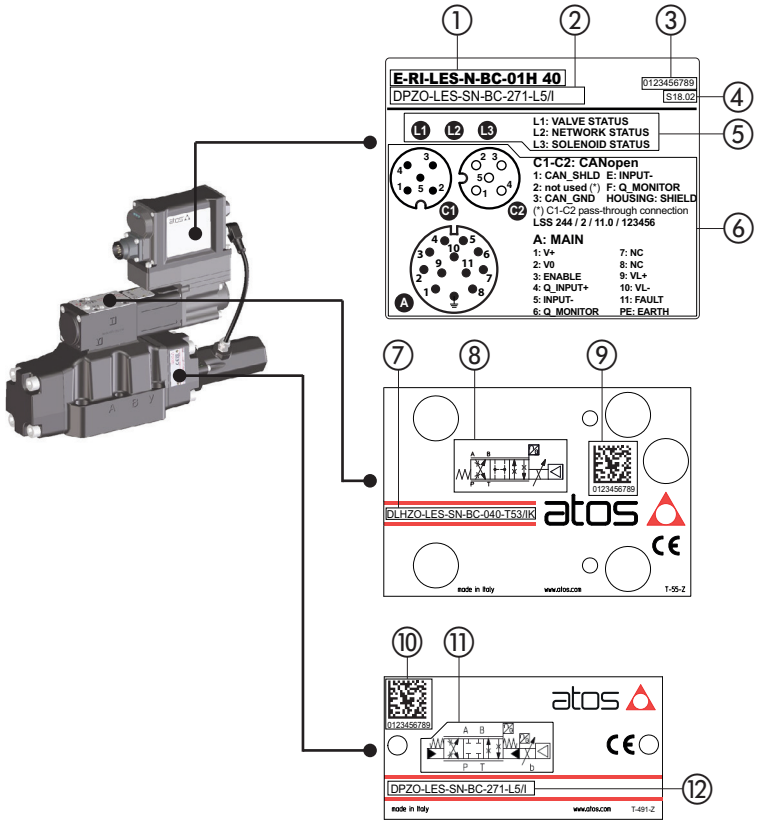

① Digital driver code
② Valve code
③ Digital driver serial number
④ Digital driver factory firmware version
⑤ Diagnostic led description
⑥ Connectors pinout

⑦ Pilot valve code
⑧ Pilot hydraulic symbol (simplified)
⑨ Pilot valve serial number

⑩ Valve serial number
⑪ Hydraulic symbol (simplified)
⑫ Valve code

4.4 **Safety piloted valve with on-board driver/axis card** - DPZO-LES /K example

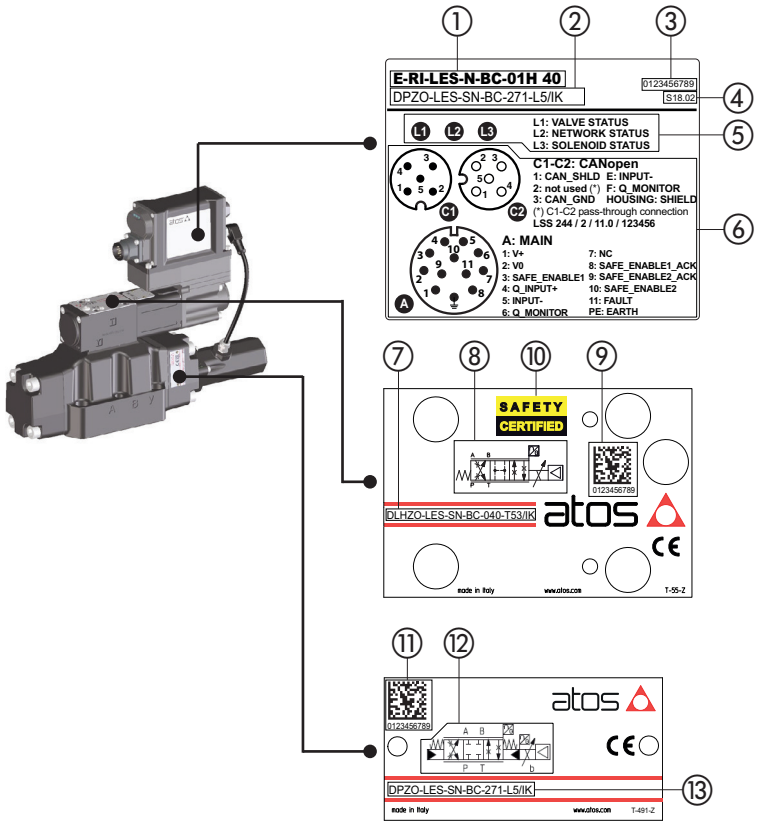

① Digital driver code
② Valve code
③ Digital driver serial number
④ Digital driver factory firmware version
⑤ Diagnostic led description
⑥ Connectors pinout

⑦ Pilot valve code
⑧ Pilot hydraulic symbol (simplified)
⑨ Pilot valve serial number
⑩ Logo identifying the safety components

⑪ Valve serial number
⑫ Hydraulic symbol (simplified)
⑬ Valve code

5 SAFETY NOTES

5.1 Intended use

Atos proportional valves are intended for integration in industrial systems and machines or for the assembly with other components to form a machine or a system. They may only be operated under the environmental and operating conditions described in the valves technical tables.

SAFETY CERTIFIED

For safety-relevant applications, use only safety proportional valves /U or /K, indentified by the Safety Certified logo
The superior control logic in connection with the proportional valve, is responsible for the control of the machine's motion sequence and also for its safety-related monitoring.

5.2 Improper use

Any improper use of the components is not admissible. Improper use of the product includes:

- use in explosive environments
- incorrect storage
- incorrect transport
- lack of cleanliness during storage and installation
- incorrect installation
- use of inappropriate or non-admissible fluids
- operation outside the specified performance limits
- operation outside the approved temperature range

Atos spa does not assume any liability for damage caused by improper use. The user assumes all risks involved with improper use.

5.3 Installation

Installation must be performed following the recommendations contained in the valves technical tables.

WARNING: non-compliance with functional safety

SAFETY CERTIFIED

In case of mechanical or electric failures, risk of death or persons injury could occur.
Functional safety prescriptions according to EN ISO 13849 must be observed in the hydraulic circuit.

WARNING: fixing bolts

For the valve mounting, use only class 12.9 bolts, with dimensions and length reported in the valves technical tables.
Observe the specified tightening torque.
Using inappropriate fixing bolts or insufficient tightening torque, can cause the valve to loosen with consequent leakage of fluid under pressure which may cause personal injury and property damage.

WARNING: hot surface

The valve considerably heats up during operation. Allow the valve to cool down sufficiently before touching it.
During operation, touch the valve solenoid only by using protective gloves. Please also observe ISO 13732-1 and EN 982.

WARNING: electronic driver/axis control

Before operating/connect the valve with the Atos CONNECT mobile App or E-SW-SETUP & Z-SW-SETUP PC software, carefully read the user manual: mobile App or PC software can change/inhibit the behaviour of the valve causing damage and injury!

During store/restore operations of the electronic driver/axis control permanent memory:

- current to valve solenoid is switched off: operate store/restore with no active valve regulation in the system
- do not turn off power supply: driver/axis control parameter lose may occur

Faults of driver/axis control may compromise safety or change operating conditions, shut down the driver/axis control immediately and notify qualified personnel.

CAUTION

Use of the valve outside the approved temperature range may lead to functional failures like overheating of the valve solenoid/driver.
Only use the valve within the specified ambient and fluid temperature range.

CAUTION: pressurized systems

When working at hydraulic systems with stored energy (accumulator or cylinders working under gravity), proportional valves may even be pressurized after the hydraulic power supply has been switched off.
During assembly and disassembly works, serious injury may be caused by a powerful leaking of hydraulic fluid jet.
Ensure that the whole hydraulic system is depressurized and the electrical control is de-energized.

CAUTION: missing equipotential bonding

Electrostatic phenomena, an incorrect earthing or missing equipotential bonding may lead to malfunctions or uncontrolled movements at the machine and thus cause injuries.
Provide for correct earthing or proper equipotential bonding.

CAUTION: penetrating water and humidity

In case of use in humid or wet environments, water or humidity may penetrate at electrical connectors or into the valve electronics.
This may lead to malfunctions at the valve and to unexpected movements in the hydraulic system which may result in personal injury and damage to property:

- only use the proportional valve within the intended IP protection class
- ensure that all seals and caps of the plug-in connections are tight and intact

NOTICE

High-pressure water jets could damage the valve seals. Do not use a high-pressure washer for the valve cleaning.

NOTICE: disconnection and connection of plug-in connectors

Do not plug-in or disconnect the electric connector as long as the voltage supply is ON.

NOTICE: impact

Impact or shock may damage the valves. Never use the valves as step.

NOTICE: dirt and foreign particles

Penetrating dirt and foreign particles lead to wear and malfunctions of the valves.
During assembly, be careful to prevent foreign particles such as metal chips getting into the valve or into the hydraulic system.
Do not use linting fabric for the valve cleaning.

Environmental protection

Hydraulic fluids are harmful to the environment.
Leaking hydraulic fluid may leads to environmental pollution.
In case of fluid leakage immediately act to contain the problem.
Dispose of the hydraulic fluid in accordance with the currently applicable national regulations in your country.

Atos components do not contain substances hazardous for the environment.
The materials contained in Atos components are mainly: Copper, Steel, Aluminium, Electronic components, Rubber.
Due to the high content of reusable metals, the main components of Atos can be completely recycled after disassembling of the relevant parts.

6 HYDRAULIC AND MECHANICAL INSTALLATION

6.1 Power packs tank and tubes cleaning

The power unit tank has to be accurately cleaned, removing all the contaminants and any extraneous object. Piping has to be cold bended, burred and pickled. When completely assembled an accurate washing of the piping (flushing) is requested to eliminate the contaminants; during this operation the proportional valves have to be removed and replaced with by-pass connections, or on-off valves.

6.2 Hydraulic connections

Flexible hoses are normally used on pressure line between powerpack and proportional valve and on user lines to connect the actuators. If their potential breakage may cause damages to the machine or system or can cause injure to the operator, a proper retention (as the chain locking at both the pipe-ends) or alternately a protecting carter must be provided.
The proportional valve must be installed as close as possible to the actuator, to assure the maximum stiffness of the circuit and so the best dynamic performances.

6.3 Hydraulic drains and return lines

Drain lines must be connected to the tank without counter pressure. The drain pipe must end above the oil level.
Return line has to be sized in order to avoid variable counter pressure peaks caused by instantaneous flow variations.

6.4 Fluid conditioning

A high-performance system must be thermally conditioned to ensure a limited fluid temperature excursion (generically between 40 and 50°C) so that the fluid viscosity remains constant during operation.
The machine working cycle should start after the prescribed temperature has been reached.

6.5 Air bleeds

Air in the hydraulic circuits affects the hydraulic stiffness and it is the cause of malfunctioning and vibrations.
Air bleeds are provided in the proportional valves.

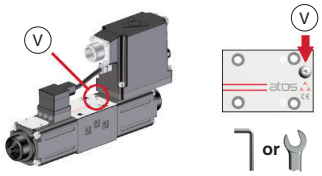

Directional valves air bleeding:

- release 2 or 3 turns the air bleed screw **V**
- cycle the valve at low pressure until the oil leaking from the **V** port is exempted from air bubbles
- lock the air bleed screw **V**

Note: to facilitate bleeding operations, apply a light backpressure (0,5 bar) on T port by adding a check valve on T line

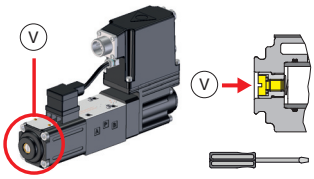

Pressure control valves air bleeding:

- release 2 or 3 turns the air bleed screw **V**
- cycle the valve at low pressure until the oil leaking from the **V** port is exempted from air bubbles
- lock the air bleed screw **V**

Following precautions have to be considered:

- at the system start-up all the bleeds must be released to allow removal of air
- untight the connections of the piping
- the system must be bled at first start-up or after maintenance
- a check valve (e.g. 0,5 bar) should be installed on the return line to tank to avoid emptying of the pipes following a long stop of the system

6.6 System flushing

The whole system must be flushed replacing the proportional valves with specific flushing plates or with on-off directional valves.
Make sure that also external pilot lines, if present in the system, are flushed.

In order to obtain the required minimum cleanliness level, the hydraulic system must be flushed for a sufficient time.

A decisive factor for the flushing time is the contamination level of the hydraulic fluid which can only be determined by means of a particle counter.

During the flushing procedure, perform a frequent monitor of the filters clogging indicator, replacing the filter elements when required.

6.7 Hydraulic fluids and operating viscosity range

Mineral oils type HLP having high viscosity index are recommended.
The hydraulic fluids must be compatible with the selected seals.
The type of fluid has to be selected in consideration of the effective working temperature range, so that the fluid viscosity remains at the optimal level.

Hydraulic fluid	Suitable seals type	Classification	Ref. Standard
Mineral oils	NBR, FKM, HNBR	HL, HLP, HLPD, HVLP, HVLPD	DIN 51524
Flame resistant without water	FKM	HFDU, HFDR	ISO 12922
Flame resistant with water	NBR, HNBR	HFC	

Fluid viscosity: 20 ÷ 100 mm²/s - max allowed range 15 ÷ 380 mm²/s

CAUTION: easily inflammable hydraulic fluid
In connection with fire or other hot sources, leaking hydraulic fluid may lead to fire or explosions.

6.8 Filtration

The correct fluid filtration ensures a long service life of the valves and it prevent anomalous wearing or sticking.

CAUTION
Contamination in the hydraulic fluid may cause functional failures e.g. jamming or blocking of the valve spool / poppet.
In the worst case, this may result in unexpected actuators movements and thus it constitutes a risk of injury.
Ensure adequate hydraulic fluid cleanliness according to the cleanliness class required for the valve.

Max fluid contamination level, see also filter section at www.atos.com or KTF catalog:

- normal operation: ISO4406 class 18/16/13 NAS1638 class 7
- longer life: ISO4406 class 16/14/11 NAS1638 class 5

6.9 Valve fastening

Remove the protection pad located on the valve mounting surface.
Check the correct positioning of the seals on the valve ports.
Verify that the valve mounting surface is clean and free from damages and burrs.
Lock the fastening bolts in cross sequence (like in aside example) at the tightening torque specified in the valve technical table.

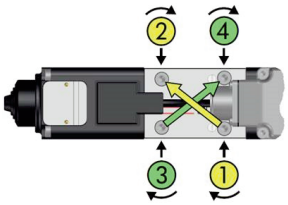

7 ELECTRICAL INSTALLATION

7.1 Power supply

The power supply device must be sized in order to generate the correct voltage when all utilities require the max current at same time; in general 50W max power can be considered for each proportional valve.

Following additional notes have to be considered:

- power supply from a battery: overvoltages (typically greater than 34 Volts) damage the electronic circuits; it is recommended the use of suitable filters and voltage suppressors
- the power supply must be appropriately stabilized or rectified and filtered: apply at least a 10000 μF/40 V capacitance to single phase rectifiers or a 4700 μF/40 V capacitance to three phase rectifiers
- a safety fuse is required in series to each power supply: see relevant technical tables for fuses value

7.2 Electrical wiring

The electrical cables must be shielded as indicated in section 8 with shield or cablebraid connected to the ground.

On-board driver/axis card - recommended cables characteristics

Main connector	Cable
7 pin - Metallic / Plastic	LiYCY 7 x 0,75 mm² max 20 m (logic and power supply) or LiYCY 7 x 1 mm² max 40 m (logic and power supply)
12 pin - Metallic	LiYCY 12 x 0,75 mm² max 20 m (logic and power supply)
12 pin - Plastic	LiYCY 10 x 0,14 mm² max 40 m (logic) plus LiYY 3 x 1 mm² max 40 m (power supply)

Off-board driver/axis card - recommended cables characteristics

Driver/axis card	Cable
E-BM-AES E-BM-RES E-BM-T*/L* Z-BM-TEZ/LEZ Z-BM-KZ	LiYCY shielded cables: 0,5 mm² max 50 m for logic 1,5 mm² max 50 m for power supply
E-MI-AS-IR	2 poles x 0,5 mm² plus 4 poles x 0,35 mm² - cable lenght 4 m factory wired external diameter 7,4 mm
E-MI-AC	LiYCY shielded cables: 0,5 mm² max 40 m for logic 1 mm² max 40 m for power supply

Note: for transducers wiring cable please consult the transducers datasheet

7.3 Suppression of interferences by electrical noise

When starting the system, it is always advisable to check that feedback, references signal are free from interferences and electrical noise which can affect the characteristics of the signals and generate instability in the whole system.

Electrical noises can be suppressed by shielding and grounding the signal cables, see section 8.

Most of electrical noises are due to external magnetic fields generated by transformers, electric motors, switchboards, etc.

8 SHIELD CONNECTION

The correct shielding of signal cables has to be provided to protect the electronics from electrical noise disturbances, which could affect the valve functioning.

In general following basic rules should be observed:
- power supply cables and signal cables should be routed in separate cable conduits.
- signal cables should be kept far from strong electromagnetic disturbance sources such as electric motor, inverters or transformers.

In the following examples are shown simple shielding criteria to avoid ground loops which may enhance the noise effect and in the worst cases they could cause the driver burning.

Refer to the applicable international standards for details about the shielding criteria.

CORRECT SHIELD CONNECTIONS EXAMPLES

OK

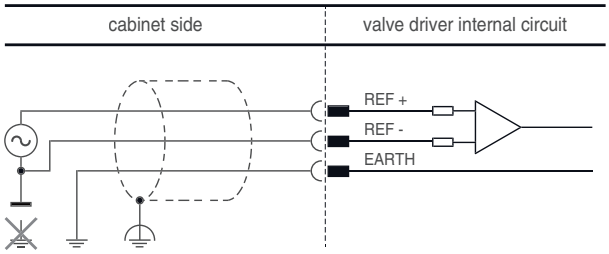

Shield connectedto the protected earth

OK

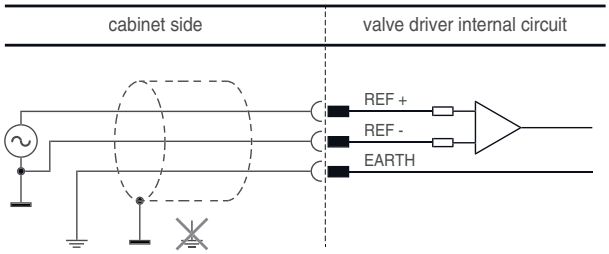

Shield connected to the same power supply GND

WRONG SHIELD CONNECTIONS EXAMPLES

NO

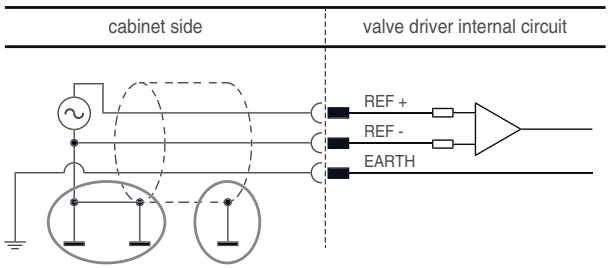

Never connect the shield on both side

NO

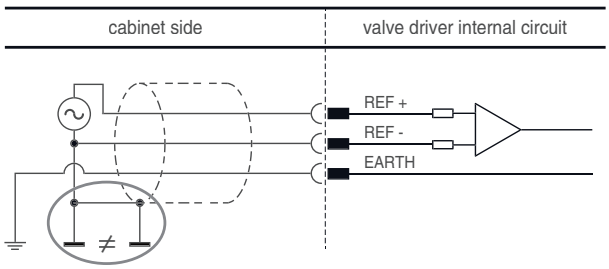

Never connect the shield to the grounding facilities having different potential

standard earth power supply GND protected earth

9 MAINTENANCE

Maintenance must be carried out only by qualified personnel with a specific knowledge of hydraulics and electrohydraulics

9.1 Ordinary maintenance

- The valves does not require other maintenance operations except seals replacement
- Results of maintenance and inspection must be planned and documented
- Follow the maintenance instructions of the fluid manufacturer
- Any preventive maintenance should be performed only by experienced personnel authorized by Atos.
- Cleaning the external surfaces using a wet cloth to avoid accumulation of dust layer
- Don't use compressed air for cleaning to avoid any dangerous dust dispersion on the surrounding atmosphere
- Any sudden increment in temperature requires the immediate stop of the system and the inspection of the relevant components

9.2 Repairing

In case of incorrect functioning or beak-down it is recommended to send the valve back to Atos or to Atos authorized service centers which will provide for the reparation.
Unauthorized opening of the valves during the warranty period invalidates the warranty.

9.3 Transport

Atos proportional valves are high-quality products. In order to prevent damage, the valves have to be transported in the original packaging or with equivalent transport protection.

Observe the following guidelines for transportation of valves:

- before any movement check the valve weight reported in the relevant technical table
- use soft lifting belts to move or lift the heavy valves to avoid damages

WARNING
The valve may fall down and cause damage and injuries, if transported improperly.

Use personal protective equipment, such as: gloves, working shoes, safety goggles, working clothes, etc.

9.4 Storage

Valves are boxed using a VpCi protective packing system, offering best protection to oxidation during components sea transport or long storage in humid environments.
The valve surface is protected with a zinc coating, which guarantees a corrosion resistance of over 200 hours in the salt spray test.
Additionally all valves are tested with mineral oil ISO VG 46; the oil film left after testing ensure the internal corrosion protection.

For the valves transporting and storing always observe the environmental conditions specified in the relevant technical tables.
Improper storage may damage the product.

The valves can be stored for up to 12 months under the following conditions:

- If there is no specific information in the components technical tables, comply with a storage temperature of –20 °C to +50 °C
- Do not store the valves outdoors
- Protect the valves against water and humidity in case of storage in open air
- Store the valves in the shelf or on a pallet
- Store the valves in the original packaging or comparable packaging in order to protect them from dust and dirt
- Remove the plastic covers from the valves mounting surface only before the assembly

In case of storage period longer than 12 months please contact our technical office

Operating and maintenance information for on-off valves

directional, flow, and pressure controls
safety valves with spool position monitor, conforming to Machine Directive 2006/42/EC

This operating and maintenance information applies to Atos on-off directional, flow, pressure control valves and safety valves with spool position monitor.
It is intended to provide useful guidelines to avoid risks when the valves are installed in the hydraulic system.
It contains important information on the safe and proper installation, commissioning, operation, transport, and maintenance of the products.
The prescriptions included in this document must be strictly observed to avoid damages and injury.
The respect of this operating and maintenance information grants an increased working life, trouble-free operation and thus reduced repairing costs.

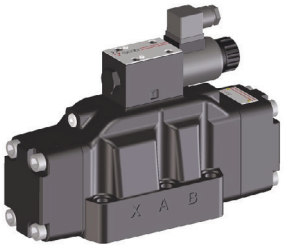

1 SYMBOL CONVENTIONS

Following symbols are used in this documentation to evidence particular risks to be carefully avoided.
In the following are listed the symbol conventions with their meaning, in case of non-compliance with this operating and maintenance information.

⚠ **WARNING**	Death or serious injury could occur	risk classes to ANSI Z535.6 / ISO 3864
⚠ **CAUTION**	Minor or moderate injury could occur	
NOTICE	Property damage could occur	
SAFETY CERTIFIED	Notes relevant to safety valves	
⚠	Information to be observed	

2 GENERAL NOTES

This document is relevant to the installation, use and maintenance of on-off directional, flow and pressure control valves.
It is intended for machine manufacturers, assemblers and system end-users.

⚠ **WARNING**
Personal injury and property damage may be caused by incorrect use of the products!
The products have been designed for use in industrial environments and may only be used in the appropriate way.

Before using Atos valves, the following requirements must be met to ensure the appropriate use of the products:
- personnel who uses Atos valves must first read and understand the operating and maintenance information, particularly the Safety Notes in section 5
- the products must remain in their original state, no modifications are permitted
- damaged or faulty valves must not be installed or put into operation
- make sure that the products have been installed as described in section 6

2.1 Warranty

The expiration of warranty results from the following operations:
- incorrect assembly and commissioning
- improper use, see 5.2
- improper handling and storage, see 6.4
- modification of the original condition

3 CERTIFICATION

Atos safety valves with spool / poppet position monitor are designed to accomplish a safety function intented to reduce the risk in process control systems.
The valves are **TÜV certified** in compliance with Machine Directive 2006/42/EC Annex IX – EC type-examination certificate for safety components (ref. Annex IV – 21) Norms EN ISO13849-1 and EN ISO13849-2
They can be used in applications up to Category 1, PL c in high demand mode.
The spool / poppet position monitor is factory set in conformity to the relevant norms, and their regulation is properly sealed.

⚠ Any tampering of the sealing invalidates the certification

4 PRODUCT IDENTIFICATION EXAMPLES - nameplates

4.1 Directional solenoid valve, direct - DHE example

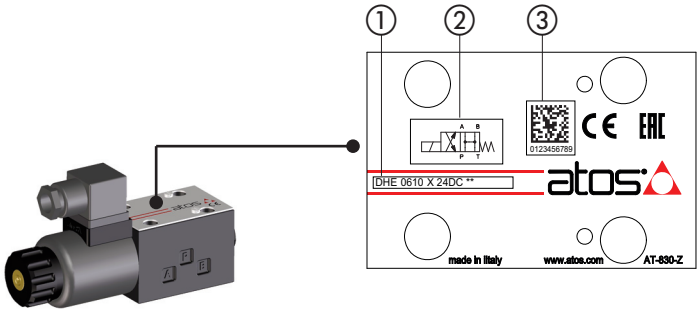

① Valve code
② Hydraulic symbol (simplified)
③ Valve serial number

4.2 Directional solenoid valve, piloted - DPHE example

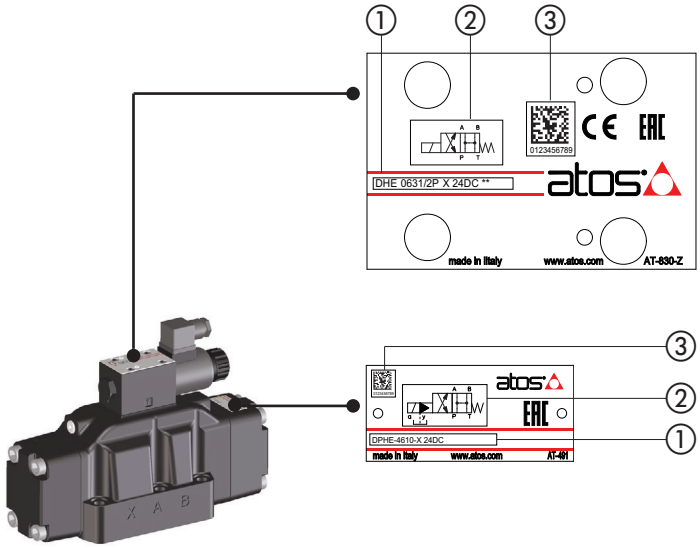

① Pilot valve code
② Pilot valve hydraulic symbol
③ Pilot valve serial number

① Valve code
② Hydraulic symbol (simplified)
③ Valve serial number

4.3 Pressure relief valve, piloted - AGAM example

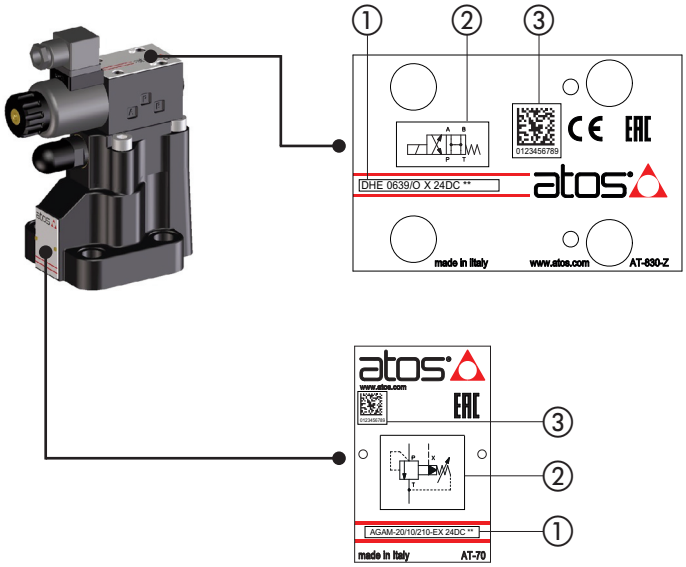

① Pilot valve code
② Pilot valve hydraulic symbol
③ Pilot valve serial number

① Valve code
② Hydraulic symbol (simplified)
③ Valve serial number

4.4 **Directional solenoid valve, direct** - DHE-*/FI example

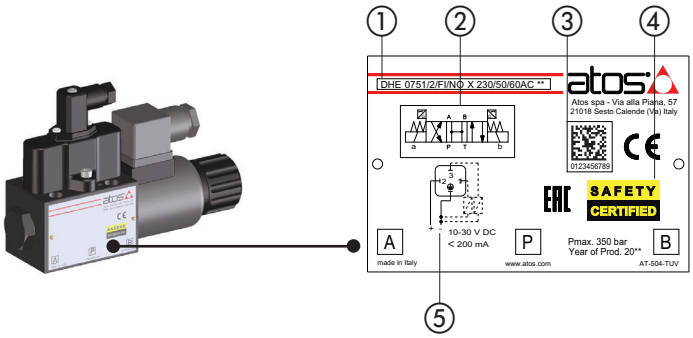

① Valve code
② Hydraulic symbol (simplified)
③ Valve serial number
④ Logo identifying the safety component
⑤ Sensor electric connection

4.5 **Directional solenoid valve, piloted** - DPHE-*/FV example

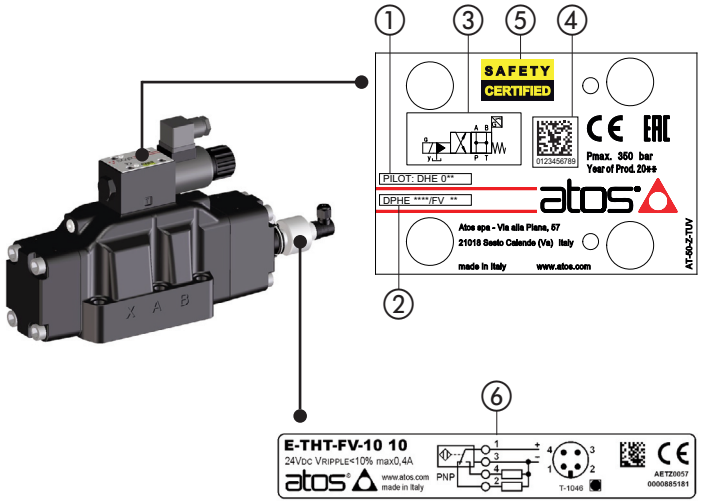

① Pilot valve code
② Valve code
③ Valve hydraulic symbol
④ Pilot valve serial number
⑤ Logo identifying the safety component
⑥ Sensor electric connection

4.6 **Pressure relief valve, piloted** - LIDA-*/FV example

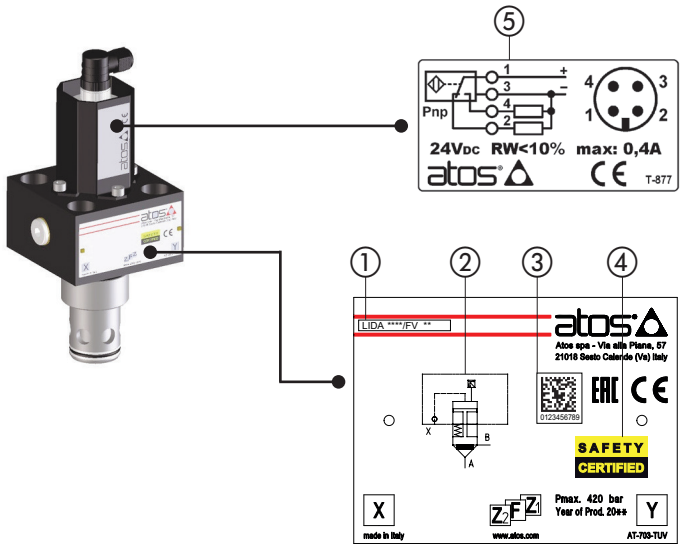

① Valve code
② Valve hydraulic symbol
③ Pilot valve serial number
④ Logo identifying the safety component
⑤ Sensor electric connection

5 SAFETY NOTES

5.1 Intended use

Atos valves are intended for integration in industrial systems and machines or for the assembly with other components to form a machine or a system. They may only be operated under the environmental and operating conditions described in the valves technical tables.

SAFETY CERTIFIED

For safety-relevant applications, use only on-off safety valves identified by the Safety Certified logo.
The superior control logic in connection with the safety valve, is responsible for the control of the machine's motion sequence and also for its safety-related monitoring.

5.2 Improper use

Any improper use of the components is not admissible.

Improper use of the product includes:

- use in explosive environments
- incorrect storage
- incorrect transport
- lack of cleanliness during storage and installation
- incorrect installation
- use of inappropriate or non-admissible fluids
- operation outside the specified performance limits
- operation outside the approved temperature range

Atos spa does not assume any liability for damage caused by improper use. The user assumes all risks involved with improper use.

5.3 Installation

Installation must be performed following the recommendations contained in the valves technical tables.

WARNING: non-compliance with functional safety

SAFETY CERTIFIED

In case of mechanical or electric failures, risk of death or persons injury could occur.
Functional safety prescriptions according to EN ISO 13849 must be observed in the hydraulic circuit.

WARNING: fixing bolts

For the valve mounting, use only class 12.9 bolts, with dimensions and length reported in the valves technical tables.
Observe the specified tightening torque.
Using inappropriate fixing bolts or insufficient tightening torque, can cause the valve to loosen with consequent leakage of fluid under pressure which may cause personal injury and property damage.

WARNING: hot surface

The valve considerably heats up during operation. Allow the valve to cool down sufficiently before touching it.
During operation, touch the valve solenoid only by using protective gloves. Please also observe ISO 13732-1 and EN 982.

CAUTION

Use of the valve outside the approved temperature range may lead to functional failures like overheating of the valve solenoid.
Only use the valve within the specified ambient and fluid temperature range.

CAUTION: pressurized systems

When working at hydraulic systems with stored energy (accumulator or cylinders working under gravity), valves may even be pressurized after the hydraulic power supply has been switched off.
During assembly and disassembly works, serious injury may be caused by a powerful leaking of hydraulic fluid jet.
Ensure that the whole hydraulic system is depressurized and the electrical control is de-energized.

CAUTION: missing equipotential bonding

Electrostatic phenomena, an incorrect earthing or missing equipotential bonding may lead to malfunctions or uncontrolled movements at the machine and thus cause injuries.
Provide for correct earthing or proper equipotential bonding.

CAUTION: penetrating water and humidity

In case of use in humid or wet environments, water or humidity may penetrate at electrical connectors.
This may lead to malfunctions at the valve and to unexpected movements in the hydraulic system which may result in personal injury and damage to property:

- only use the valve within the intended IP protection class
- ensure that all seals and caps of the plug-in connections are tight and intact

NOTICE

High-pressure water jets could damage the valve seals.
Do not use a high-pressure washer for the valve cleaning.

NOTICE: disconnection and connection of plug-in connectors

Do not plug-in or disconnect the electric connector as long as the voltage supply is ON.

NOTICE: impact

Impact or shock may damage the valves. Never use the valves as step.

NOTICE: dirt and foreign particles

Penetrating dirt and foreign particles lead to wear and malfunctions of the valves.
During assembly, be careful to prevent foreign particles such as metal chips getting into the valve or into the hydraulic system
Do not use linting fabric for the valve cleaning.

Environmental protection

Hydraulic fluids are harmful to the environment.
Leaking hydraulic fluid may leads to environmental pollution.
In case of fluid leakage immediately act to contain the problem.
Dispose of the hydraulic fluid in accordance with the currently applicable national regulations in your country.

Atos components do not contain substances hazardous for the environment.
The materials contained in Atos components are mainly: Copper, Steel, Aluminium, Electronic components, Rubber
Due to the high content of reusable metals, the main components of Atos can be completely recycled after disassembling of the relevant parts.

6 HYDRAULIC AND MECHANICAL INSTALLATION

6.1 Power packs tank and tubes cleaning

The power unit tank has to be accurately cleaned, removing all the contaminants and any extraneous object.
When completely assembled an accurate washing of the piping (flushing) is requested to eliminate the contaminants.

6.2 Hydraulic connections

Flexible hoses are normally used on pressure line between powerpack and the valve and on user lines to connect the actuators. If their potential breakage may cause damages to the machine or system or can cause injure to the operator, a proper retention (as the chain locking at both the pipe-ends) or alternately a protecting carter must be provided.

6.3 Hydraulic drains and return lines

Drain lines must be connected to the tank without counter pressure. The drain pipe must end above the oil level.

Return line has to be sized in order to avoid pressure peaks caused by istantaneous flow variations.

6.4 Fluid conditioning

A high-performance system must be thermally conditioned to ensure a limited fluid temperature excursion (generically between 40 and 50°C) so that the fluid viscosity remains constant during operation.
The machine working cycle should start after the prescribed temperature has been reached.

6.5 Air bleeds

Air in the hydraulic circuits affects the hydraulic stiffness and it causes malfunctioning and vibrations.
Following precautions have to be considered:

- at the system start-up all the bleeds must be released to allow the air removal
- untight the connections of the piping
- the system must be bled at first start-up or after maintenance
- a check valve (e.g. 0,5 bar) should be installed on the return line to tank to avoid emptying of the pipes following a long stop of the system

6.6 System flushing

The whole system must be flushed for a sufficient time in order to obtain the required minimum cleanliness level.
Make sure that also external pilot lines, if present in the system, are flushed.

A decisive factor for the flushing time is the contamination level of the hydraulic fluid which can only be determined by means of a particle counter.

During the flushing procedure, perform a frequent monitor of the filters clogging indicator, replacing the filter elements when required.

6.7 Hydraulic fluids and operating viscosity range

Mineral oils type HLP having high viscosity index are recommended.
The hydraulic fluids must be compatible with the selected seals.
The type of fluid has to be selected in consideration of the effective working temperature range, so that the fluid viscosity remains at the optimal level.

Hydraulic fluid	Suitable seals type	Classification	Ref. Standard
Mineral oils	NBR, FKM, HNBR	HL, HLP, HLPD, HVLP, HVLPD	DIN 51524
Flame resistant without water	FKM	HFDU, HFDR	ISO 12922
Flame resistant with water	NBR, HNBR	HFC	

Fluid viscosity: 15 ÷ 100 mm^2/s - max allowed range 2,8 ÷ 500 mm^2/s

CAUTION: easily inflammable hydraulic fluid
In connection with fire or other hot sources, leaking hydraulic fluid may lead to fire or explosions.

6.8 Filtration

The correct fluid filtration ensures a long service life of the valves and it prevent anomalous wearing or sticking.

CAUTION
Contamination in the hydraulic fluid may cause functional failures e.g. jamming or blocking of the valve spool / poppet.
In the worst case, this may result in unexpected actuators movements and thus it constitutes a risk of injury.
Ensure an adequate hydraulic fluid cleanliness according to the cleanliness class required for the the valve.

Max fluid contamination level, see also filter section at www.atos.com or KTF catalog:

ISO4406 class 20/18/15 NAS1638 class 9

6.9 Valve fastening

Remove the protection pad located on the valve mounting surface.
Check the correct positioning of the seals on the valve ports.
Verify that the valve mounting surface is clean and free from damages and burrs.
Lock the fastening bolts in cross sequence (like in aside example) at the tightening torque specified in the valve technical table.

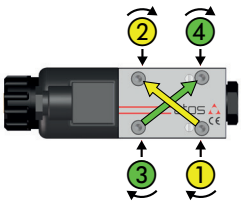

7 MAINTENANCE

Maintenance must be carried out only by qualified personnel with a specific knowledge of hydraulics and electrohydraulics

7.1 Ordinary maintenance

- The valves does not require other maintenance operations except seals replacement
- Results of maintenance and inspection must be planned and documented
- Follow the maintenance instructions of the fluid manufacturer
- Any preventive maintenance should be performed only by experienced personnel authorized by Atos.
- Cleaning the external surfaces using a wet cloth to avoid accumulation of dust layer
- Don't use compressed air for cleaning to avoid any dangerous dust dispersion on the surrounding atmosphere
- Any sudden increment in temperature requires the immediate stop of the system and the inspection of the relevant components

7.2 Repairing

In case of incorrect functioning or beak-down it is recommended to send the valve back to Atos or to Atos authorized service centers which will provide for the reparation.
Unauthorized opening of the valves during the warranty period invalidates the warranty.

7.3 Transport

In order to prevent damage, the valves have to be transported in the original packaging or with equivalent transport protection.

Observe the following guidelines for transportation of valves:

- before any movement check the valve weight reported in the relevant technical table
- use soft lifting belts to move or lift the heavy valves to avoid damages

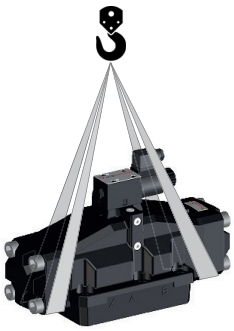

WARNING
The valve may fall down and cause damage and injuries, if transported improperly.

Use personal protective equipment, such as: gloves, working shoes, safety goggles, working clothes, etc.

7.4 Storage

Valves are boxed using a VpCi protective packing system, offering best protection to oxidation during components sea transport or long storage in humid environments.
The valve surface is protected with a zinc coating, which guarantees a corrosion resistance of over 200 hours in the salt spray test.
Additionally all valves are tested with mineral oil ISO VG 46; the oil film left after testing ensure the internal corrosion protection.

For the valves transporting and storing always observe the environmental conditions specified in the relevant technical tables.
Improper storage may damage the product.

The valves can be stored for up to 12 months under the following conditions:

- If there is no specific information in the components technical tables, comply with a storage temperature of –20 °C to +50 °C
- Do not store the valves outdoors
- Protect the valves against water and humidity in case of storage in open air
- Store the valves in the shelf or on a pallet
- Store the valves in the original packaging or comparable packaging in order to protect them from dust and dirt
- Remove the plastic covers from the valves mounting surface only before the assembly

In case of storage period longer than 12 months please contact our technical office

Operating and maintenance information

safety PED pressure relief valves, conforming to PED Directive 2014/68/EU

This operating and maintenance information applies to Atos safety pressure relief valves conforming to Pressure Equipment Directive (PED) 2014/68/EU. It is intended to provide useful guidelines on the safe and proper assembly, commissioning, operation, use, maintenance and transport of PED valves. The prescriptions included in this document must be strictly observed to avoid damages and injury.

1 SYMBOL CONVENTIONS

Following symbols are used in this documentation to evidence particular risks to be carefully avoided.
In the following are listed the symbol conventions with their meaning, in case of non-compliance with this operating and maintenance information.

WARNING	Death or serious injury could occur	risk classes to ANSI Z535.6 / ISO 3864
CAUTION	Minor or moderate injury could occur	
NOTICE	Property damage could occur	
	Information to be observed	

2 GENERAL NOTES

This document is relevant to the installation, use and maintenance of on-off directional, flow and pressure control valves.
It is intended for machine manufacturers, assemblers and system end-users.

WARNING
Personal injury and property damage may be caused by incorrect use of the products!
The products have been designed for use in industrial environments and may only be used in the appropriate way.

Before using Atos valves, the following requirements must be met to ensure the appropriate use of the products:
- personnel who uses Atos valves must first read and understand the operating and maintenance information, particularly the Safety Notes in section 5
- the products must remain in their original state, no modifications are permitted
- damaged or faulty valves must not be installed or put into operation
- make sure that the products have been installed as described in section 6

2.1 Warranty

The expiration of warranty results from the following operations:
- incorrect assembly and commissioning
- improper use, see 5.2
- improper handling and storage, see 6.4
- modification of the original condition

3 CERTIFICATION

Safety pressure relief valves are certified by DEKRA, according to Pressure Equipment Directive 2014/68/EU (PED).
They meet the requirements specified in: Module B - EU Type Examination - Production Type (Annex III) of Directive 2014/68/EU - PED category IV

4 COMPONENTS DESCRIPTION

This document applies to direct and pilot operated safety pressure relief valves type CART*/PED, ARE*/PED, ARAM*/PED, AGAM*/PED.
These valves are designed to operate as safety components, limiting the maximum system pressure or to protect parts of the circuit from overpressure.
They are also used as safety valves to protect hydraulic accumulators.

The valves are factory set at the pressure level required by the costumer.
The pressure adjustment screw of the valves is protected with a lead sealed plastic cap to avoid manumission of the factory setting.

⚠ Any tampering of the lead sealing invalidates the certification.

5 PRODUCT IDENTIFICATION EXAMPLES - nameplates

5.1 Screw-in cartridges type CART

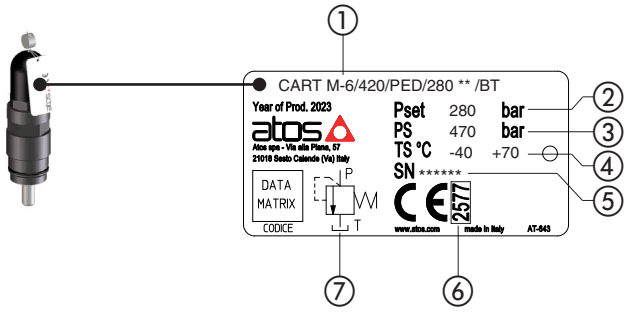

① Valve code
② Factory pressure setting
③ Burst pressure
④ Min ÷ Max fluid or ambient temperature range
⑤ Valve serial number **(1)**
⑥ Notified body reference number
⑦ Hydraulic symbol

5.2 In-line valves type ARE and ARAM

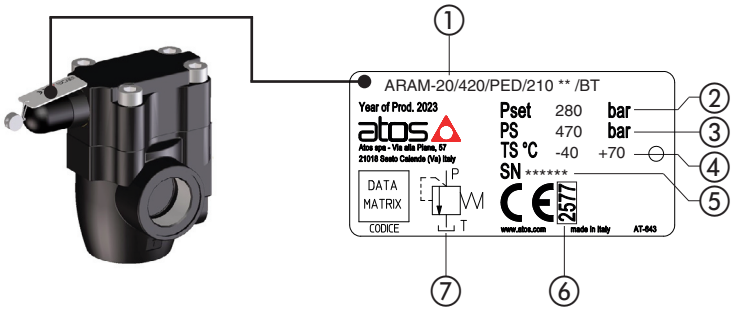

① Valve code
② Factory pressure setting
③ Burst pressure
④ Min ÷ Max fluid or ambient temperature range
⑤ Valve serial number **(1)**
⑥ Notified body reference number
⑦ Hydraulic symbol (simplified)

5.3 Subplate valves type AGAM

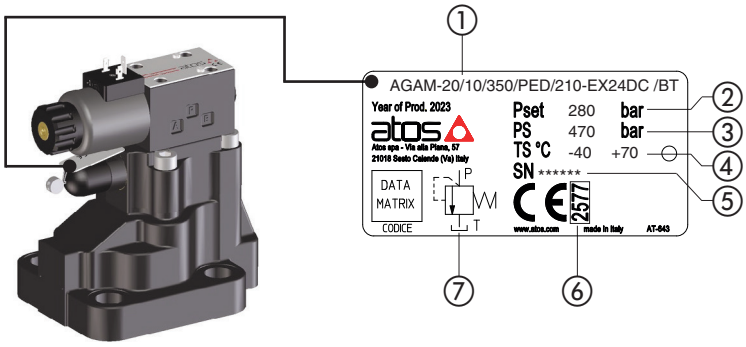

① Valve code
② Factory pressure setting
③ Burst pressure
④ Min ÷ Max fluid or ambient temperature range
⑤ Valve serial number **(1)**
⑥ Notified body reference number
⑦ Hydraulic symbol (simplified)

(1) Example for serial number**:**

23	-	001
Year: **23** = 2023		Progressive number

Note: nameplates may not be painted but must be kept in a readable condition

6 SAFETY NOTES

6.1 Intended use

Atos valves are intended for integration in industrial systems and machines or for the assembly with other components to form a machine or a system. They may only be operated under the environmental and operating conditions described in the valves technical tables.

6.2 Improper use

Any improper use of the components is not admissible.

Improper use of the product includes:
- Wrong installation
- Use of inappropriate or non-admissible hydraulic fluids
- Use outside of specified performance limits
- Use outside the specified temperature range
- The safety valves must not be used if the maximum system flow exceeds the value indicated as “max admissible” reported in the relevant technical table
- Manumission of the factory pressure setting
- Incorrect transport

6.3 Installation

Installation must beperformed following the raccomandations contained in the valves technical tables

Any tampering of the lead sealing invalidates the certification.

WARNING: fixing bolts - for AGAM
For the valve mounting, use only class 12.9 bolts, with dimensions and length reported in the valves technical tables.
Observe the specified tightening torque.
Using inappropriate fixing bolts or insufficient tightening torque, can cause the valve to loosen with consequent leakage of fluid under pressure which may cause personal injury and property damage.

CAUTION
Use of the valve outside the approved temperature range may lead to functional failures like overheating of the valve solenoid.
Only use the valve within the specified ambient and fluid temperature range.

CAUTION: penetrating water and humidity - for ARAM with solenoid valve
In case of use in humid or wet environments, water or humidity may penetrate at electrical connectors.
This may lead to malfunctions at the valve and to unexpected movements in the hydraulic system which may result in personal injury and damage to property:
- only use the valve within the intended IP protection class
- ensure that all seals and caps of the plug-in connections are tight and intact

NOTICE: dirt and foreign particles
Penetrating dirt and foreign particles lead to wear and malfunctions of the valves.
During assembly, be careful to prevent foreign particles such as metal chips getting into the valve or into the hydraulic system
Do not use linting fabric for the valve cleaning.

Environmental protection
Hydraulic fluids are harmful to the environment.
Leaking hydraulic fluid may leads to environmental pollution.
In case of fluid leakage immediately act to contain the problem.
Dispose of the hydraulic fluid in accordance with the currently applicable national regulations in your country.

Atos components do not contain substances hazardous for the environment.
The materials contained in Atos components are mainly: Copper, Steel, Aluminium, Electronic components, Rubber
Due to the high content of reusable metals, the main components of Atos can be completely recycled after disassembling of the relevant parts.

7 HYDRAULIC AND MECHANICAL INSTALLATION

Safety pressure relief valves must be used as supplied by Atos, without unduly opening, division and/or substitution of internal parts.

Oil direction: P→T
Inlet oil port: P
Outlet oil port: T

Pressure on the discharge line T must be close to zero.

Verify that the seals are in good conditions before install the valves in the system.

Screw-in cartridges type CART, must not be removed from their manifold after commissioning, in order to avoid the loosening of internal parts.

The end user must provide proper systems to avoid the cartridge disassembling.

CART in-line valves have to be mounted screwing into the seat, as per technical table **CY010**.
ARE in-line valves have to be assembled with proper fittings as per technical table **CY020**.
ARAM in-line valves have to be assembled with proper fittings as per technical table **CY045**.
AGAM subplate valves have to be mounted on proper surfaces, using screws as per technical table **CY066**.

See also section 7.1 for tightening torque.

7.1 Tightening torque - for **CART** and **AGAM**

Valve code			Class 12.9	Tightening torque (Nm)
CART M-3	22			60
CART M-4	17			25
CART M-5	17			30
CART M-6	27			55
CART ARE-15	27			65
CART ARE-20	36			140
AGAM-10		10	n.4 M12x35	125
AGAM-20		14	n.4 M15x50	300
AGAM-32		17	n.4 M20x60	600

7.2 Application notes for valves ARAM and AGAM with pilot solenoid valve for multiple pressure selection.

The valve main regulation is factory set and lead sealed at the value required by the customer. This regulation corresponds to the max pressure controlled by the valve and it complies with the requirement of PED Directive 2014/68/EU.

The additional second and third pressure settings, selectable by the pilot solenoid valve, are without sealed regulation and they can be adjusted by the end user according to the system requirements.

The second and third pressure setting must be regulated at lower value respect to the lead sealed factory setting.

If the end user tries to adjust the second or third pressure setting at a higher value than the lead sealed factory setting, this last intervenes to limit the pressure according to PED requirements.

① Main pressure regulation - lead sealed factory setting
② Second pressure setting
③ Third pressure setting
④ Pilot solenoid valve

7.3 Hydraulic fluids and operating viscosity range

Mineral oils type HLP having high viscosity index are recommended.
The hydraulic fluids must be compatible with the selected seals.
Make sure that the working fluid is compatible with gas and dust present in the environment.
The type of fluid has to be selected in consideration of the effective working temperature range, so that the fluid viscosity remains at the optimal level.

Hydraulic fluid	Suitable seals type	Classification	Ref. Standard
Mineral oils	NBR, FKM, NBR low temp.	HL, HLP, HLPD, HVLP, HVLPD	DIN 51524
Flame resistant without water	FKM	HFDU, HFDR	ISO 12922
Flame resistant with water	NBR, NBR low temp.	HFC	

Fluid viscosity: 15 ÷ 100 mm^2/s - max allowed range 2,8 ÷ 500 mm^2/s

7.4 Filtration

The correct fluid filtration ensures a long service life of the valves and it prevent anomalous wearing or sticking.

Contamination in the hydraulic fluid may cause functional failures e.g. jamming or blocking of the valve spool / poppet.
In the worst case, this may result in unexpected system movements and thus constitute a risk of injury.
Ensure adequate hydraulic fluid cleanliness according to the cleanliness classes of the valve over the entire operating range.

Max fluid contamination level:

ISO 4406 class 20/18/15 NAS 1638 class 9

Note: see also filter section at www.atos.com or KTF catalog

8 CERTIFIED DISCHARGE COEFFICIENT Kdr - not available AGAM and ARAM

CART M-3/420/PED
minimum calibration flow: Q =0.5 l/min

Pset [bar] (1)	Qmax [l/min] (2)	Kdr (3)	Pmax [bar] (4)
25 - 50	1,2 - 1,2	0,18	55
51 - 100	1,2 - 1,35	0,18	110
101 - 150	1,6 - 1,6	0,12	165
151 - 210	2 - 2,5	0,18	231
211 - 350	2,1 - 2,5	0,41	385
351 - 420	2,5 - 2,5	0,39	462

CART M-4/420/PED
minimum calibration flow: Q =0.5 l/min

Pset [bar] (1)	Qmax [l/min] (2)	Kdr (3)	Pmax [bar] (4)
25 - 50	3,4 - 5,4	0,41	55
51 - 100	3,7 - 7,7	0,31	110
101 - 150	7,7 - 13	0,31	165
151 - 210	10,5 - 13,5	0,33	231
211 - 280	12 - 15	0,37	308
281 - 350	15 - 15	0,7	385
351 - 420	15	0,73	462

CART M-5/420/PED
minimum calibration flow: Q =2 l/min

Pset [bar] (1)	Qmax [l/min] (2)	Kdr (3)	Pmax [bar] (4)
25 - 50	7,5 - 23	0,742	55
51 - 100	20 - 32	0,742	110
101 - 160	27 - 50	0,724	176
161 - 210	32 - 50	0,745	231
211 - 260	50 - 50	0,740	286
261 - 350	50 - 50	0,750	385
351 - 420	50 - 50	0,759	462

CART M-6/420/PED and ARE-6/420/PED
minimum calibration flow: Q =2 l/min

Pset [bar] (1)	Qmax [l/min] (2)	Kdr (3)	Pmax [bar] (4)
25 - 50	8 - 34	0,71	55
51 - 100	34 - 60	0,89	110
101 - 210	60 - 60	0,57	231
211 - 280	60 - 60	0,58	308
281 - 350	60 - 60	0,39	385
351 - 420	60 - 60	0,58	462

CART ARE-15/420/PED and ARE-15/420/PED
minimum calibration flow: Q =2 l/min

Pset [bar] (1)	Qmax [l/min] (2)	Kdr (3)	Pmax [bar] (4)
25 - 50	60 - 100	0,55	55
51 - 75	100 - 100	0,82	82.5
76 - 150	100 - 100	0,85	165
151 - 250	100 - 100	0,8	275
251 - 300	100 - 100	0,8	330
301 - 350	100 - 100	0,8	385
351 - 420	100 - 100	0,79	462

CART ARE-20/420/PED and ARE-20/420/PED
minimum calibration flow: Q =2 l/min

Pset [bar] (1)	Qmax [l/min] (2)	Kdr (3)	Pmax [bar] (4)
30 - 60	55 - 75	0,705	66
61 - 110	50 - 110	0,682	121
111 - 200	70 - 150	0,731	220
201 - 230	120 - 150	0,752	253
231 - 290	65 - 120	0,765	319
291 - 315	150 - 150	0,766	346
316 - 420	150 - 150	0,862	462

AGAM-10/420/PED/* and AGAM-10/420/PED/*-EPX
minimum calibration flow: Q =10 l/min

Pset [bar] (1)	Qmax [l/min] (2)	Kdr (3)	Pmax [bar] (4)
25 - 50	200 - 200	0,528	55
51 - 110	200 - 200	0,678	121
111 - 200	200 - 200	0,772	220
201 - 350	200 - 200	0,796	385
351 - 420	200 - 200	0,877	462

AGAM-20/420/PED/* and AGAM-20/420/PED/*-EPX
minimum calibration flow: Q =25 l/min

Pset [bar] (1)	Qmax [l/min] (2)	Kdr (3)	Pmax [bar] (4)
25 - 50	200 - 200	0,523	55
51 - 110	280 - 400	0,481	121
111 - 200	400 - 400	0,656	220
201 - 350	400 - 400	0,766	385
351 - 420	400 - 400	0,785	462

AGAM-32/420/PED/* and AGAM-32/420/PED/*-EPX
minimum calibration flow: Q =25 l/min

Pset [bar] (1)	Qmax [l/min] (2)	Kdr (3)	Pmax [bar] (4)
25 - 50	200 - 265	0,526	55
51 - 110	265 - 400	0,519	121
111 - 200	430 - 600	0,683	220
201 - 350	600 - 600	0,738	385
351 - 420	600 - 600	0,773	462

ARAM-20/420/PED/* and ARAM-20/420/PED/*-EPX
minimum calibration flow: Q =25 l/min

Pset [bar] (1)	Qmax [l/min] (2)	Kdr (3)	Pmax [bar] (4)
25 - 50	400 - 400	0,437	55
51 - 110	400 - 400	0,671	121
111 - 200	400 - 400	0,671	220
201 - 350	400 - 400	0,750	385
351 - 420	400 - 400	0,754	462

ARAM-32/420/PED/* and ARAM-32/420/PED/*-EPX
minimum calibration flow: Q =25 l/min

Pset [bar] (1)	Qmax [l/min] (2)	Kdr (3)	Pmax [bar] (4)
25 - 50	200 - 300	0,516	55
51 - 110	300 - 500	0,531	121
111 - 200	500 - 600	0,652	220
201 - 350	600 - 600	0,745	385
351 - 420	600 - 600	0,774	462

Notes:

(1) Pset: factory pressure setting at the indicated minimum flow (Q)
(2) Qmax: max flow rate reached at Pset + 10%
(3) Kdr: Certified discharge coefficient. It represents the ratio between the actual flow that is discharged by the valve and the theoretical flow calculated on the basis of the passage section and the Δp.
(4) Pmax: pressure reached at Qmax (with limit of Pset + 10%)

9 MAINTENANCE

Maintenance must be carried out only by qualified personnel with a specific knowledge of hydraulics and electrohydraulics

9.1 Ordinary maintenance

Safety pressure relief valves do not require specific maintenance.
A visual inspection is definitely useful to check the integrity of lead sealing and the absence of external oil leakages.
Periodically the external surface of the valve should be cleaned from dirt to allow a clear readability of the identification plate.

9.2 Repairing

Safety pressure relief valves are supplied as single assembled unit: spare parts are not allowed.
In case of incorrect functioning or beak-down it is recommended to send the valve back to Atos which will provide for the reparation.
Only for ARAM and AGAM versions equipped with pilot solenoid valve, the replacement of the pilot solenoid valve with another Atos valve of the same type and with the same function is allowed.

10 TRANSPORT AND STORAGE

10.1 Transport

Observe the following guidelines for transportation of valves:

- Before any movement check the valve weight reported in the technical table relevant to the specific component
- Use soft lifting belts to move or lift the heavy valves to avoid damages

WARNING
The valve may fall down and cause damage and injuries, if transported improperly.

Use personal protective equipment, such as: gloves, working shoes, safety goggles, working clothes, etc.

10.2 Storage

Valves are boxed using a VpCi protective packing system, offering best protection to oxidation during components sea transport or long storage in humid environments.
The valve surface is protected with a zinc coating, which guarantees a corrosion resistance of over 200 hours in the salt spray test.
Additionally all valves are tested with mineral oil ISO VG 46; the oil film left after testing ensure the internal corrosion protection.

For the valves transporting and storing always observe the environmental conditions specified in the relevant technical tables.
Improper storage may damage the product.

The valves can be stored for up to 12 months under the following conditions:

- If there is no specific information in the components technical tables, comply with a storage temperature of –20 °C to +50 °C
- Do not store the valves outdoors
- Protect the valves against water and humidity in case of storage in open air
- Store the valves in the shelf or on a pallet
- Store the valves in the original packaging or comparable packaging in order to protect them from dust and dirt
- Remove the plastic covers from the valves mounting surface only before the assembly

In case of storage period longer than 12 months please contact our technical office

11 RELATED DOCUMENTATION

CY010	CART M*/PED, CART ARE*/PED – direct, screw-in safety cartridges with PED certification
CY020	ARE-*/PED - direct, in-line safety valves with PED certification
CY045	ARAM-*/PED - piloted, in-line safety valves with PED certification
CY066	AGAM-*/PED - piloted, subplate safety valves with PED certification

atos

the smart electrohydraulics

Worldwide Sales Organization

A sales network with 25 branches, 120 sales professionals and distributors in more than 80 countries, together with great responsiveness and focus on customers

Atos spa
Italy - 21018 Sesto Calende
Phone +39 0331 922078
info@atos.com
www.atos.com

the smart electrohydraulics