X67DM9321.L12

Data sheet
1.40 (November 2025)

Translation of the original documentation

Publishing information

B&R Industrial Automation GmbH

B&R Strasse 1

5142 Eggelsberg

Austria

Telephone: +43 7748 6586-0

Fax: +43 7748 6586-26

office@br-automation.com

Disclaimer

All information in this document is current as of its creation. The contents of this document are subject to change without notice. B&R Industrial Automation GmbH assumes unlimited liability in particular for technical or editorial errors in this document only (i) in the event of gross negligence or (ii) for culpably inflicted personal injury. Beyond that, liability is excluded to the extent permitted by law. Liability in cases in which the law stipulates mandatory unlimited liability (such as product liability) remains unaffected. Liability for indirect damage, consequential damage, business interruption, loss of profit or loss of information and data is excluded, in particular for damage that is directly or indirectly attributable to the delivery, performance and use of this material.

B&R Industrial Automation GmbH notes that the software and hardware designations and brand names of the respective companies used in this document are subject to general trademark, brand or patent protection.

Hardware and software from third-party suppliers referenced in this document is subject exclusively to the respective terms of use of these third-party providers. B&R Industrial Automation GmbH assumes no liability in this regard. Any recommendations made by B&R Industrial Automation GmbH are not contractual content, but merely non-binding information for which no liability is assumed. When using hardware and software from third-party suppliers, the relevant user documentation of these third-party suppliers must additionally be consulted and, in particular, the safety guidelines and technical specifications contained therein must be observed. The compatibility of the products from B&R Industrial Automation GmbH described in this document with hardware and software from third-party suppliers is not contractual content unless this has been separately agreed in individual cases; in this respect, warranty for such compatibility is excluded in any case, and it is the sole responsibility of the customer to verify this compatibility in advance.

1268261029280-1.40

1 General information

1.1 Other applicable documents

For additional and supplementary information, see the following documents.

Other applicable documents

Document name	Title
MAX67	X67 System user's manual

1.2 Order data

Order number	Short description	Figure
	Digital mixed modules	
X67DM9321.L12	X67 digital mixed module, 16 channels configurable as inputs or outputs, 24 VDC, 0.5 A, configurable input filter, 2 event counters 50 kHz, M12 connectors, X2X Link address switch, high-density module	

Table 1: X67DM9321.L12 - Order data

Required accessories
For a general overview, see section "Accessories - General overview" in the X67 System user's manual.

1.3 Module description

This module is equipped with 16 digital channels that can be configured either as inputs or outputs. The inputs are designed for a sink circuit, and the outputs are designed for a source circuit.

Functions:

- Node number switches
- Digital inputs
- Event counter / Gate measurement
- Digital outputs
- Monitoring the operating limits

Node number switches

The module is equipped with a node number switch that can be used to define a fixed address on the X2X segment.

Digital inputs

The digital inputs are equipped with an input filter with a configurable input delay. The input states can also be latched if required.

Event counter / Gate measurement

The module has 2 counter channels that can be used either as event counters or for gate measurement.

Monitoring status of the digital outputs

The output signal of the digital outputs is monitored for short circuit or overload.

Monitoring operating limits

The voltage of the I/O power supply is monitored for voltage overshoot or undershoot.

2 Technical description

2.1 Technical data

Order number	X67DM9321.L12
Short description	
I/O module	16 digital channels, configurable as inputs or outputs using software, inputs with additional functions
General information	
Insulation voltage between channel and bus	500 V_{eff}
Nominal voltage	24 VDC
B&R ID code	0x199B
Sensor/Actuator power supply	0.5 A summation current
Status indicators	I/O function per channel, supply voltage, bus function
Diagnostics	
Outputs	Yes, using LED status indicator and software
I/O power supply	Yes, using LED status indicator and software
Connection type	
X2X Link	M12, B-coded
Inputs/Outputs	8x M12, A-coded
I/O power supply	M8, 4-pin
Power consumption	
I/O power supply	3 W
X2X Link power supply	0.75 W
Certifications	
CE	Yes
UKCA	Yes
ATEX	Zone 2, II 3G Ex nA IIA T5 Gc IP67, Ta = 0 - Max. 60°C TÜV 05 ATEX 7201X
UL	cULus E115267 Industrial control equipment
HazLoc	cCSAus 244665 Process control equipment for hazardous locations Class I, Division 2, Groups ABCD, T5
KC	Yes
I/O power supply	
Nominal voltage	24 VDC
Voltage range	18 to 30 VDC
Integrated protective function	Reverse polarity protection
Power consumption	
Sensor/Actuator power supply	Max. 12 W [1)]
Sensor/Actuator power supply	
Voltage	I/O power supply minus voltage drop for short-circuit protection
Voltage drop for short-circuit protection at 0.5 A	Max. 2 VDC
Summation current	Max. 0.5 A
Short-circuit proof	Yes
Digital inputs	
Input characteristics per EN 61131-2	Type 1
Input voltage	18 to 30 VDC
Input current at 24 VDC	Typ. 4 mA
Input circuit	Sink
Input filter	
Hardware	≤10 µs (channels 1 to 4) / ≤70 µs (channels 5 to 16)
Software	Default 0 ms, configurable between 0 and 25 ms in 0.2 ms intervals
Input resistance	Typ. 5 kΩ
Additional functions	50 kHz event counting, gate measurement
Switching threshold	
Low	<5 VDC
High	>15 VDC
Event counters	
Quantity	2
Signal form	Square wave pulse
Evaluation	Each negative edge, cyclic counter
Input frequency	Max. 50 kHz
Counter 1	Input 1
Counter 2	Input 3

Table 2: X67DM9321.L12 - Technical data

Technical description

Order number	X67DM9321.L12
Counter frequency	Max. 50 kHz
Counter size	16-bit
Gate time measurement	
Quantity	1
Signal form	Square wave pulse
Evaluation	Positive edge - Negative edge
Counter frequency	
Internal	48 MHz, 3 MHz, 187.5 kHz
Counter size	16-bit
Length of pause between pulses	≥100 µs
Pulse length	≥20 µs
Supported inputs	Input 2 or input 4
Digital outputs	
Variant	Current-sourcing FET
Switching voltage	I/O power supply minus residual voltage
Nominal output current	0.5 A
Total nominal current	8 A
Output circuit	Source
Output protection	Thermal shutdown in the event of overcurrent or short circuit, integrated protection for switching inductive loads, reverse polarity protection of the output power supply
Diagnostic status	Output monitoring with 10 ms delay
Leakage current when the output is switched off	5 µA
Switching on after overload shutdown	Approx. 10 ms (depends on the module temperature)
Residual voltage	<0.3 V at 0.5 A nominal current
Peak short-circuit current	<12 A
Switching delay	
0 → 1	<400 µs
1 → 0	<400 µs
Switching frequency	
Resistive load	Max. 100 Hz
Braking voltage when switching off inductive loads	50 VDC
Electrical properties	
Electrical isolation	Channel isolated from bus Channel not isolated from channel
Operating conditions	
Mounting orientation	
Any	Yes
Installation elevation above sea level	
0 to 2000 m	No limitation
>2000 m	Reduction of ambient temperature by 0.5°C per 100 m
Degree of protection per EN 60529	IP67
Ambient conditions	
Temperature	
Operation	-25 to 60°C
Derating	-
Storage	-40 to 85°C
Transport	-40 to 85°C
Mechanical properties	
Dimensions	
Width	53 mm
Height	155 mm
Depth	42 mm
Weight	330 g
Torque for connections	
M8	Max. 0.4 Nm
M12	Max. 0.6 Nm

Table 2: X67DM9321.L12 - Technical data

1) The power consumption of the sensors and actuators connected to the module is not permitted to exceed 12 W.

2.2 LED status indicators

Figure	LED	Color/Status		Description
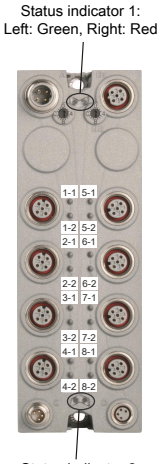	**Status indicator 1**: Status indicator for X2X Link			
	LED	**Green**	**Red**	**Description**
		Off	Off	No power supply via X2X Link
		On	Off	X2X Link supplied, communication OK
		Off	On	X2X Link supplied but no X2X Link communication
		On	On	PREOPERATIONAL: X2X Link supplied, module not initialized
	I/O LEDs			
	LED	**Color**	**Status**	**Description**
	1/1 - 8/2	Orange	-	Output state of the corresponding digital input/output
	Status indicator 2: Status indicator for module functionality			
	LED	**Color**	**Status**	**Description**
	Left	Green	Off	No power to module
			Single flash	Mode RESET
			Double flash	Mode BOOT (during firmware update)[1]
			Blinking	Mode PREOPERATIONAL
			On	Mode RUN
	Right	Red	Off	Module not supplied with power or everything OK
			On	Error or reset state
			Single flash	Warning/Error on an I/O channel. Level monitoring for digital outputs has been triggered.
			Double flash	Supply voltage not within the valid range

1) Depending on the configuration, a firmware update can take up to several minutes.

2.3 Operating and connection elements

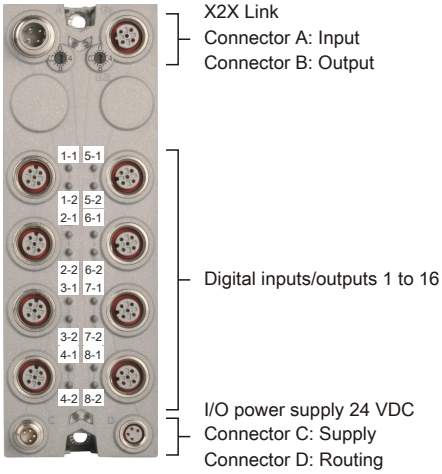

Left side / Channels 1 to 8 in the first byte		Right side / Channels 9 to 16 in the second byte	
Channel	**Connection**	**Connection**	**Channel**
1	1-1	5-1	9
2	1-2	5-2	10
...	...	...	...
7	4-1	8-1	15
8	4-2	8-2	16

2.3.1 X2X Link

The module is connected to the X2X Link network using pre-assembled cables. The connection is made using M12 circular connectors.

Connection	Pinout	
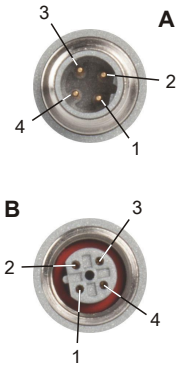	**Pin**	**Name**
	1	X2X+
	2	X2X
	3	X2X⊥
	4	X2X\
	Shield connection made via threaded insert in the module. A → B-coded (male), input B → B-coded (female), output	

2.3.2 Pinout

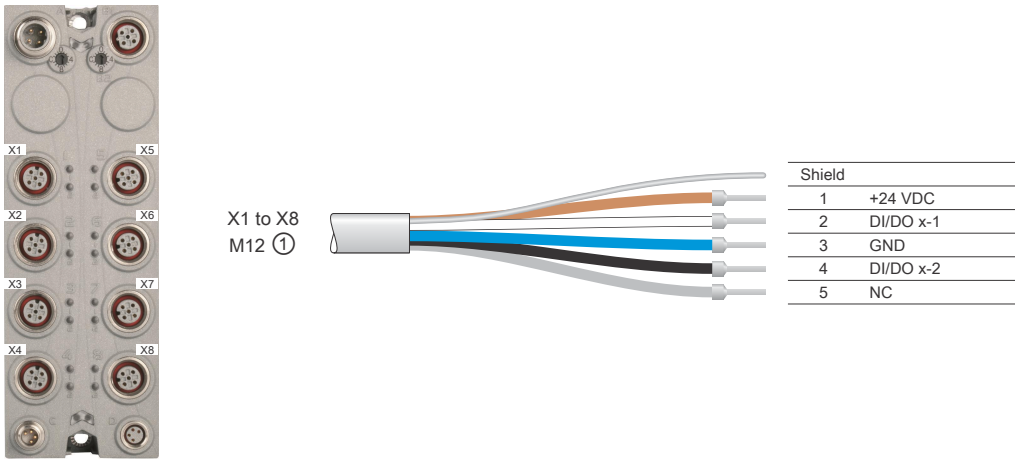

① X67CA0A41.xxxx: M12 sensor cable, straight
X67CA0A51.xxxx: M12 sensor cable, angled

2.3.2.1 Connections X1 to X8

M12, 5-pin	Pinout	
Connection 1 to 4 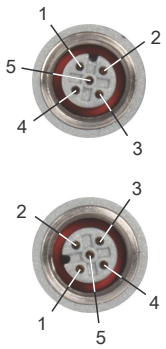 Connection 5 to 8	**Pin**	**Name**
	1	24 VDC sensor/actuator power supply[1)]
	2	Input/Output x-1
	3	GND
	4	Input/Output x-2
	5	NC
	Shield connection made via threaded insert in the module. 1) The sensor/actuator power supply is not permitted to be external. X1 to X8 → A-coded (female), input/output	

2.3.3 I/O power supply 24 VDC

The I/O power supply is connected via M8 connectors C and D. The I/O power supply is connected via connector C (male). Connector D (female) is used to route the I/O power supply to other modules.

Information:

The maximum permissible current for the I/O power supply is 8 A (4 A per connection pin)!

Connection	Pinout	
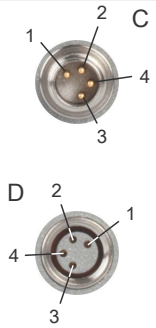	**Pin**	**Name**
	1	24 VDC[1]
	2	24 VDC[1]
	3	GND
	4	GND
	C → Connector (male) in module, supply for I/O power supply D → Connector (female) in module, routing of I/O power supply	

1) Both power supply pins must be supplied. Cutting off the outputs is only ensured if **both** pins are disconnected from the power supply.

Information:

If the summation current of the outputs is >4 A, current must also be supplied via connector D, pin 2.

2.4 Connection examples

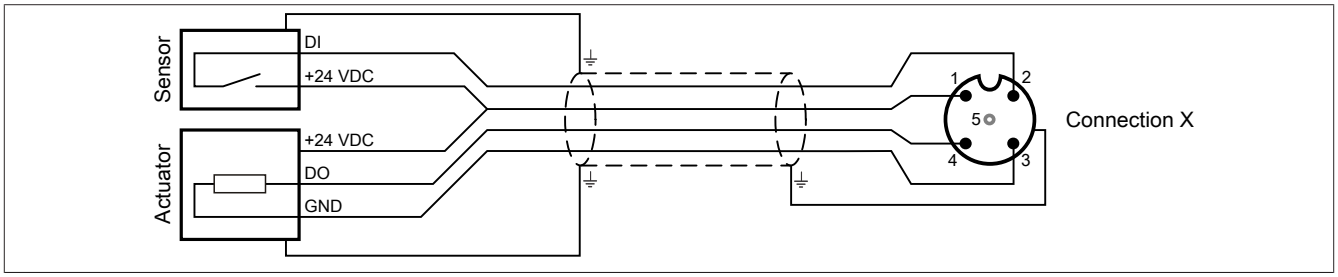

2.5 Input/Output circuit diagram

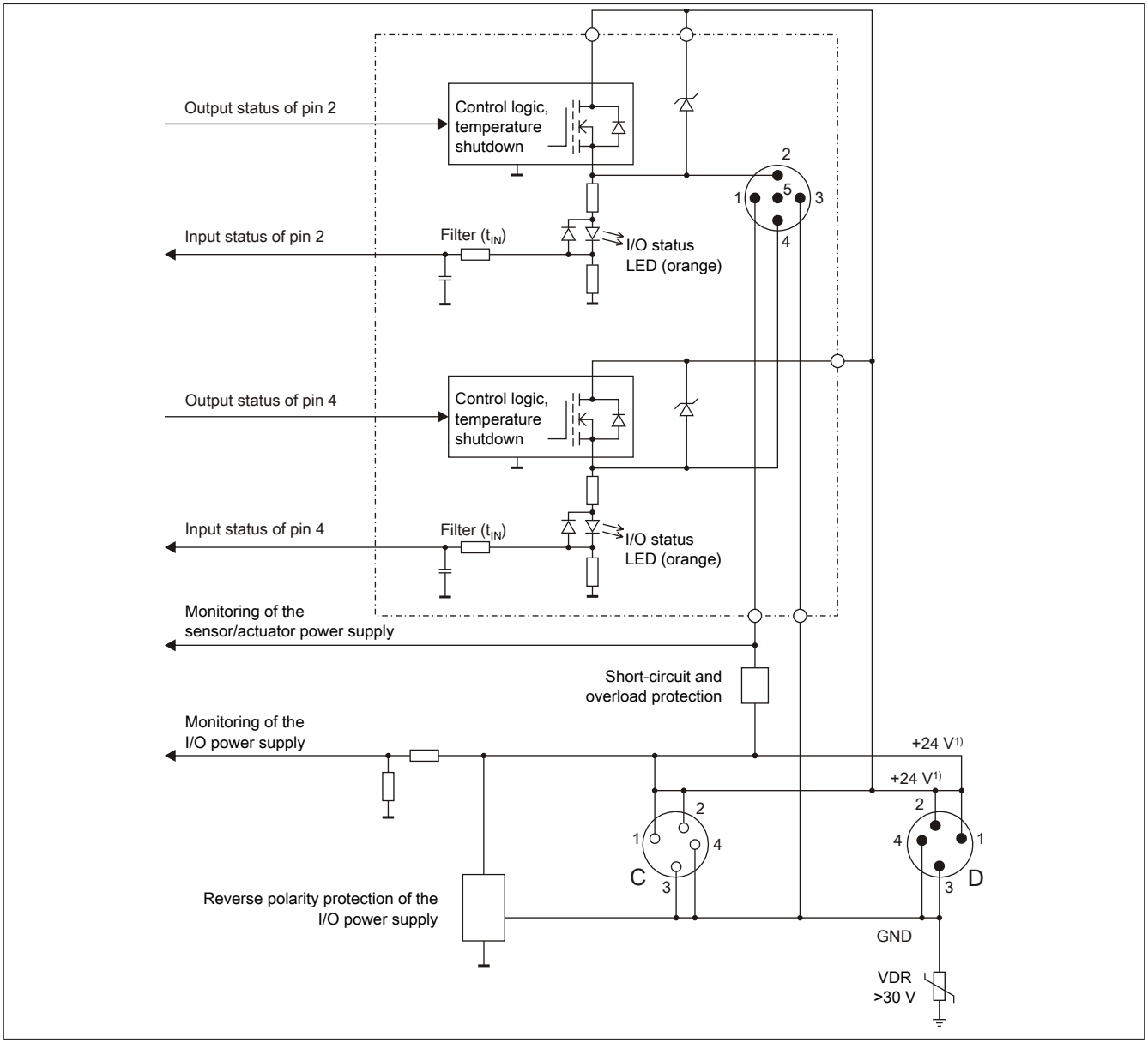

1) Cutting off the outputs is only ensured if **both** pins are disconnected from the power supply.

2.6 Switching inductive loads

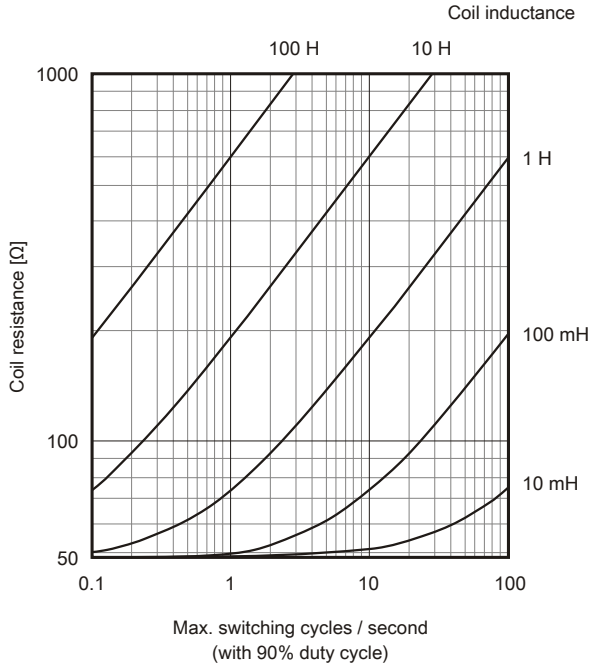

3 Function description

3.1 Node number switches

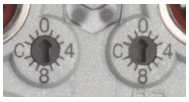

The decentralized X2X Link backplane, which connects individual X67 modules with one another, is set up to be self-addressing. Because of this, it is not necessary to set the node numbers. The module address is assigned according to its position in the X2X Link line.

In certain applications, e.g. with changing configurations of modular machines, it is necessary to assign certain module groups to a fixed address regardless of the modules in front of them in the segment.

For this purpose, the digital mixer module is equipped with a node number switch that can be used to set the X2X Link address. All subsequent modules refer to this offset and use it automatically for addressing purposes.

Example configuration

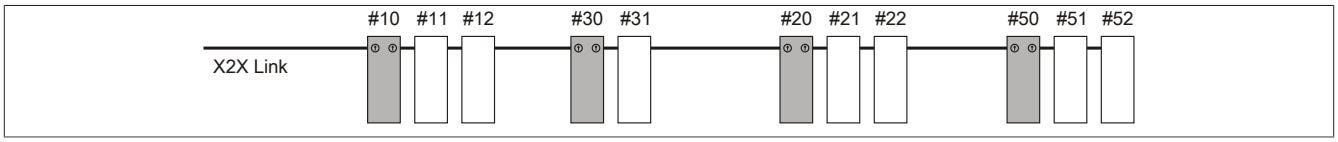

Figure 1: Sample configuration

If the node number on the module is set to 0x00, then the module address is assigned according to its position in the X2X Link line.

3.2 Digital inputs

The module is equipped with 16 digital channels that can be configured as digital inputs.

Information:

The registers are described in "I/O masks 1 to 8" on page 18 and "I/O masks 9 to 16" on page 18.

3.2.1 Recording the input state

Unfiltered

The input state is collected with a fixed offset to the network cycle and transferred in the same cycle.

Filtered

The filtered state is collected with a fixed offset to the network cycle and transferred in the same cycle. Filtering takes place asynchronously to the network in multiples of 200 µs with a network-related jitter of up to 50 µs.

Information:

The registers are described in "Input state of digital inputs 1 to 8" on page 19 and "Input state of digital inputs 9 to 16" on page 20.

3.2.2 Input filter

An input filter is available for each input. Disturbance pulses that are shorter than the input delay are suppressed by the input filter.

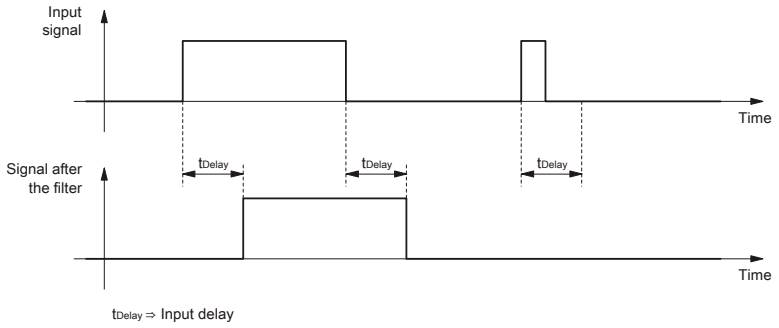

The input delay can be set in steps of 100 µs. It makes sense, however, to enter values in steps of 2 since the input signals are sampled in an interval of 200 µs.

Values	Filter
0	No software filter
2	0.2 ms
...	...
250	25 ms - Higher values are limited to this value.

Information:

The register is described in "Digital input filter" on page 18.

3.2.3 Input latch

The positive edges of the input signals can be latched with a resolution of 200 µs.

It works in the same way as a dominant reset RS flip-flop.

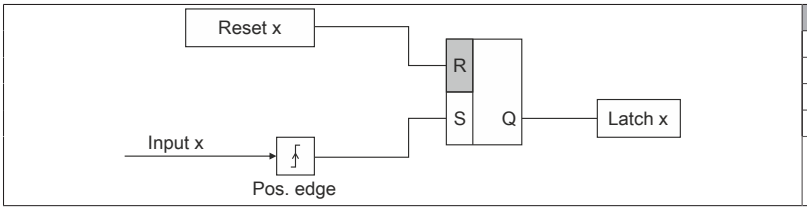

R	S	Q	State
0	0	x	Do not change
0	1	1	Set
1	0	0	Reset
1	1	0	Reset

Information:

The register is described in "Input latch" on page 22.

3.3 Event counter / Gate measurement

The module has 2 counter channels that can be used either as event counters or for gate measurement.

Event counter operation

The falling edges are registered on the counter input.

The counter value is collected with a fixed offset to the network cycle and transferred in the same cycle.

Gate measurement

The time of rising to falling edges for the gate input is registered using an internal frequency. The result is checked for overflow (0xFFFF).

The recovery time between measurements must be greater than 100 µs.

The measurement result is transferred with the falling edge to the result memory.

Information:

Only one of the counter channels at a time can be used for gate measurement.

Information:

Registers are described in "Configuring counter channels 1 and 2" on page 19 and "Event counter / Gate measurement" on page 23.

3.4 Digital outputs

The module is equipped with 16 digital channels that can be configured as digital outputs.

Information:

The registers are described in "I/O masks 1 to 8" on page 18 and "I/O masks 9 to 16" on page 18.

3.4.1 Monitoring status of the outputs

On the module, the output states of the outputs are compared to the target states. The control of the output driver is used for the target state.

A change in the output state resets monitoring for that output. The status of each individual channel can be read out. A change in the monitoring status is actively transmitted as an error message.

Supervision status	Description
0	Digital output channel: No error
1	Digital output channel: Short circuit or overload

Information:

The register is described in "Monitoring status of the digital outputs" on page 21.

3.5 Monitoring the operating limits

The status of the I/O power supply can be read out.

Bit	Description
0	I/O power supply within the warning limits (18 to 30 V)
1	I/O power supply outside the warning limits (<18 V or >30 V)

Information:

The register is described in "Operating limit status registers" on page 23.

4 Register description

4.1 General data points

In addition to the registers described in the register description, the module has additional general data points. These are not module-specific but contain general information such as serial number and hardware variant.

General data points are described in section "Additional information - General data points" in the X67 System user's manual.

4.2 Function model 2 - Standard

Register	Name	Data type	Read		Write	
			Cyclic	Acyclic	Cyclic	Acyclic
Configuration						
16	ConfigIOMask01	USINT				•
17	ConfigIOMask02	USINT				•
18	ConfigOutput03 (input filter)	USINT				•
Communication						
0	Input state of digital inputs 1 to 8	USINT	•			
	DigitalInput01	Bit 0				
	...	...				
	DigitalInput08	Bit 7				
1	Input state of digital inputs 9 to 16	USINT	•			
	DigitalInput09	Bit 0				
	...	...				
	DigitalInput16	Bit 7				
2	Switching state of digital outputs 1 to 8	USINT			•	
	DigitalOutput01	Bit 0				
	...	...				
	DigitalOutput08	Bit 7				
3	Switching state of digital outputs 9 to 16	USINT			•	
	DigitalOutput09	Bit 0				
	...	...				
	DigitalOutput16	Bit 7				
30	Status of digital outputs 1 to 8	USINT	•			
	StatusDigitalOutput01	Bit 0				
	...	...				
	StatusDigitalOutput08	Bit 7				
31	Status of digital outputs 9 to 16	USINT	•			
	StatusDigitalOutput09	Bit 0				
	...	...				
	StatusDigitalOutput16	Bit 7				
26	Input latch - Positive edges 1 to 8	USINT	•			
	InputLatch01	Bit 0				
	...	...				
	InputLatch08	Bit 7				
27	Input latch - Positive edges 9 to 16	USINT	•			
	InputLatch09	Bit 0				
	...	...				
	InputLatch16	Bit 7				
28	Acknowledgment - Input latches 1 to 8	USINT			•	
	QuitInputLatch01	Bit 0				
	...	...				
	QuitInputLatch08	Bit 7				
29	Acknowledgment - Input latches 9 to 16	USINT			•	
	QuitInputLatch09	Bit 0				
	...	...				
	QuitInputLatch16	Bit 7				
8192	asy_ModulID	UINT		•		
8196	asy_SupplyStatus	USINT		•		
8208	asy_SupplyInput	USINT		•		
8210	asy_SupplyOutput	USINT		•		

4.3 Function model 1 - Counter

Register	Name	Data type	Read		Write	
			Cyclic	Acyclic	Cyclic	Acyclic
Configuration						
16	ConfigIOMask01	USINT				•
17	ConfigIOMask02	USINT				•
20	ConfigOutput01 (counter channel 1)	USINT				•
22	ConfigOutput02 (counter channel 2)	USINT				•
18	ConfigOutput03 (input filter)	USINT				•
Communication						
0	Input state of digital inputs 1 to 8	USINT	•			
	DigitalInput01	Bit 0				
	...	...				
	DigitalInput08	Bit 7				
1	Input state of digital inputs 9 to 16	USINT	•			
	DigitalInput09	Bit 0				
	...	...				
	DigitalInput16	Bit 7				
2	Switching state of digital outputs 1 to 8	USINT			•	
	DigitalOutput01	Bit 0				
	...	...				
	DigitalOutput08	Bit 7				
3	Switching state of digital outputs 9 to 16	USINT			•	
	DigitalOutput09	Bit 0				
	...	...				
	DigitalOutput16	Bit 7				
30	Status of digital outputs 1 to 8	USINT	•			
	StatusDigitalOutput01	Bit 0				
	...	...				
	StatusDigitalOutput08	Bit 7				
31	Status of digital outputs 9 to 16	USINT	•			
	StatusDigitalOutput09	Bit 0				
	...	...				
	StatusDigitalOutput16	Bit 7				
26	Input latch - Positive edges 1 to 8	USINT	•			
	InputLatch01	Bit 0				
	...	...				
	InputLatch08	Bit 7				
27	Input latch - Positive edges 9 to 16	USINT	•			
	InputLatch09	Bit 0				
	...	...				
	InputLatch16	Bit 7				
28	Acknowledgment - Input latches 1 to 8	USINT			•	
	QuitInputLatch01	Bit 0				
	...	...				
	QuitInputLatch08	Bit 7				
29	Acknowledgment - Input latches 9 to 16	USINT			•	
	QuitInputLatch09	Bit 0				
	...	...				
	QuitInputLatch16	Bit 7				
4	Counter01	UINT	•			
6	Counter02	UINT	•			
20	Reset counter 1	USINT			•	
	ResetCounter01	Bit 5				
22	Reset counter 2	USINT			•	
	ResetCounter02	Bit 5				
8192	asy_ModulID	UINT		•		
8196	asy_SupplyStatus	USINT		•		
8208	asy_SupplyInput	USINT		•		
8210	asy_SupplyOutput	USINT		•		

4.4 Function model 254 - Bus controller

Register	Offset[1]	Name	Data type	Read		Write	
				Cyclic	Acyclic	Cyclic	Acyclic
Configuration							
16	-	ConfigIOMask01	USINT				•
17	-	ConfigIOMask02	USINT				•
20	-	ConfigOutput01 (counter channel 1)	USINT				•
22	-	ConfigOutput02 (counter channel 2)	USINT				•
18	-	ConfigOutput03 (input filter)	USINT				•
Communication							
0	0	Input state of digital inputs 1 to 16	UINT	•			
		DigitalInput01	Bit 0				
		...	...				
		DigitalInput16	Bit 15				
2	2	Switching state of digital outputs 1 to 16	UINT			•	
		DigitalOutput01	Bit 0				
		...	...				
		DigitalOutput16	Bit 15				
30	-	Status of digital outputs 1 to 16	UINT	•			
		StatusDigitalOutput01	Bit 0				
		...	...				
		StatusDigitalOutput16	Bit 15				
26	-	Input latch - Positive edges 1 to 8	USINT	•			
		InputLatch01	Bit 0				
		...	...				
		InputLatch08	Bit 7				
27	-	Input latch - Positive edges 9 to 16	USINT	•			
		InputLatch09	Bit 0				
		...	...				
		InputLatch16	Bit 7				
28	-	Acknowledgment - Input latches 1 to 8	USINT			•	
		QuitInputLatch01	Bit 0				
		...	...				
		QuitInputLatch08	Bit 7				
29	-	Acknowledgment - Input latches 9 to 16	USINT			•	
		QuitInputLatch09	Bit 0				
		...	...				
		QuitInputLatch16	Bit 7				
4	-	Counter01	UINT		•		
6	-	Counter02	UINT		•		
20	-	Reset counter 1	USINT			•	
		ResetCounter01	Bit 5				
22	-	Reset counter 2	USINT			•	
		ResetCounter02	Bit 5				
8192	-	asy_ModulID	UINT		•		
8196	-	asy_SupplyStatus	USINT		•		
8208	-	asy_SupplyInput	USINT		•		
8210	-	asy_SupplyOutput	USINT		•		

1) The offset specifies the position of the register within the CAN object.

4.4.1 Using the module on the bus controller

Function model 254 "Bus controller" is used by default only by non-configurable bus controllers. All other bus controllers can use other registers and functions depending on the fieldbus used.

For detailed information, see section "Additional information - Using I/O modules on the bus controller" in the X67 user's manual (version 3.30 or later).

4.4.2 CAN I/O bus controller

The module occupies 2 digital logical slots on CAN I/O.

4.5 Configuration

4.5.1 I/O masks 1 to 8

Name:
ConfigIOMask01

Channels can be configured as inputs/outputs in this register. It also determines whether output monitoring or filtering is applied to the channels. Outputs are monitored but not filtered.

Information:

In counter operation, channels 1 to 4 can only be configured as inputs.

Data type	Values	Bus controller default setting
USINT	See the bit structure.	0

Bit structure:

Bit	Description	Value	Information
0	Channel 1 configured as input/output	0	Configured as input (bus controller default setting)
		1	Configured as output
...		...	
7	Channel 8 configured as input/output	0	Configured as input (bus controller default setting)
		1	Configured as output

4.5.2 I/O masks 9 to 16

Name:
ConfigIOMask02

Channels can be configured as inputs/outputs in this register. It also determines whether output monitoring or filtering is applied to the channels. Outputs are monitored but not filtered.

Data type	Values	Bus controller default setting
USINT	See the bit structure.	0

Bit structure:

Bit	Description	Value	Information
0	Channel 9 configured as input/output	0	Configured as input (bus controller default setting)
		1	Configured as output
...		...	
7	Channel 16 configured as input/output	0	Configured as input (bus controller default setting)
		1	Configured as output

4.5.3 Digital input filter

Name:
ConfigOutput03

The filter value for all digital inputs can be configured in this register.

The filter value can be configured in steps of 100 µs. It makes sense, however, to enter values in steps of 2 since the input signals are sampled in an interval of 200 µs.

Data type	Values	Filter
USINT	0	No software filter (bus controller default setting)
	2	0.2 ms
	...	...
	250	25 ms - Higher values are limited to this value.

4.5.4 Configuring counter channels 1 and 2

Name:
ConfigOutput01 to ConfigOutput02
ResetCounter01 to ResetCounter02

Counter channels 1 and 2 are configured in this register.

Data type	Values	Bus controller default setting
USINT	See the bit structure.	0

Bit structure:

Bit	Description	Value	Information
0 - 2	Configuration of the counter frequency (only with gate measurement)	000	Counter frequency = 48 MHz (bus controller default setting)
		001	Counter frequency = 3 MHz
		010	Counter frequency = 187.5 kHz
		011 to 111	Reserved
3 - 4	Reserved	0	
5	ResetCounter0x	0	No effect on counter (bus controller default setting)
		1	Clears the counter
6 - 7	Configuration of the operating mode	0	Event counter operation (bus controller default setting)
		1	Gate measurement

4.6 Communication

4.6.1 Digital inputs

4.6.1.1 Input state of digital inputs 1 to 16

Name:
DigitalInput01 to DigitalInput16

This register contains the input state of digital inputs 1 to 16.

Data type	Values
UINT	See the bit structure.

Bit structure:

Bit	Name	Value	Information
0	DigitalInput01	0 or 1	Input state - Digital input 1
...		...	
15	DigitalInput16	0 or 1	Input state - Digital input 16

4.6.1.2 Input state of digital inputs 1 to 8

Name:
DigitalInput01 to DigitalInput08

This register contains the input state of digital inputs 1 to 8.

Data type	Values
USINT	See the bit structure.

Bit structure:

Bit	Name	Value	Information
0	DigitalInput01	0 or 1	Input state - Digital input 1
...		...	
7	DigitalInput08	0 or 1	Input state - Digital input 8

4.6.1.3 Input state of digital inputs 9 to 16

Name:
DigitalInput09 to DigitalInput16

This register contains the input state of digital inputs 9 to 16.

Data type	Values
USINT	See the bit structure.

Bit structure:

Bit	Name	Value	Information
0	DigitalInput09	0 or 1	Input state - Digital input 9
...		...	
7	DigitalInput16	0 or 1	Input state - Digital input 16

4.6.2 Digital outputs

The output state is transferred to the output channels with a fixed offset in relation to the network cycle (SyncOut).

4.6.2.1 Switching state of digital outputs 1 to 16

Name:
DigitalOutput01 to DigitalOutput16

This register stores the switching state of digital outputs 1 to 16.

Data type	Values
UINT	See the bit structure.

Bit structure:

Bit	Name	Value	Information
0	DigitalOutput01	0	Digital output 01 reset
		1	Digital output 01 set
...		...	
15	DigitalOutput16	0	Digital output 16 reset
		1	Digital output 16 set

4.6.2.2 Switching state of digital outputs 1 to 8

Name:
DigitalOutput01 to DigitalOutput08

This register stores the switching state of digital outputs 1 to 8.

Data type	Values
USINT	See the bit structure.

Bit structure:

Bit	Name	Value	Information
0	DigitalOutput01	0	Digital output 01 reset
		1	Digital output 01 set
...		...	
7	DigitalOutput08	0	Digital output 08 reset
		1	Digital output 08 set

4.6.2.3 Switching state of digital outputs 9 to 16

Name:
DigitalOutput09 to DigitalOutput16

This register stores the switching state of digital outputs 9 to 16.

Data type	Values
USINT	See the bit structure.

Bit structure:

Bit	Name	Value	Information
0	DigitalOutput09	0	Digital output 09 reset
		1	Digital output 09 set
...		...	
7	DigitalOutput16	0	Digital output 16 reset
		1	Digital output 16 set

4.6.3 Monitoring status of the digital outputs

On the module, the output states of the outputs are compared to the target states.

4.6.3.1 Status of digital outputs 1 to 16

Name:
StatusDigitalOutput01 to StatusDigitalOutput16

This register contains the state of digital outputs 1 to 16.

Data type	Values
UINT	See the bit structure.

Bit structure:

Bit	Name	Value	Information
0	StatusDigitalOutput01	0	Channel 01: No error
		1	Channel 01: Short circuit or overload
...		...	
15	StatusDigitalOutput16	0	Channel 16: No error
		1	Channel 16: Short circuit or overload

4.6.3.2 Status of digital outputs 1 to 8

Name:
StatusDigitalOutput01 to StatusDigitalOutput08

This register contains the state of digital outputs 1 to 8.

Data type	Values
USINT	See the bit structure.

Bit structure:

Bit	Name	Value	Information
0	StatusDigitalOutput01	0	Channel 01: No error
		1	Channel 01: Short circuit or overload
...		...	
7	StatusDigitalOutput08	0	Channel 08: No error
		1	Channel 08: Short circuit or overload

4.6.3.3 Status of digital outputs 9 to 16

Name:
StatusDigitalOutput09 to StatusDigitalOutput16

This register contains the state of digital outputs 9 to 16.

Data type	Values
USINT	See the bit structure.

Bit structure:

Bit	Name	Value	Information
0	StatusDigitalOutput09	0	Channel 09: No error
		1	Channel 09: Short circuit or overload
...		...	
7	StatusDigitalOutput16	0	Channel 16: No error
		1	Channel 16: Short circuit or overload

4.6.4 Input latch

4.6.4.1 Input latch - Positive edges 1 to 8

Name:
InputLatch01 to InputLatch08

The positive edges of the input signal can be latched with a resolution of 200 µs in this register. The input latch is either reset or prevented from latching with register "QuitInputLatch0x" on page 22.

Data type	Values
USINT	See the bit structure.

Bit structure:

Bit	Name	Value	Information
0	InputLatch01	0	Do not latch input 1
		1	Latch input 1
...		...	
7	InputLatch08	0	Do not latch input 8
		1	Latch input 8

4.6.4.2 Input latch - Positive edges 9 to 16

Name:
InputLatch09 to InputLatch16

The positive edges of the input signal can be latched with a resolution of 200 µs in this register. The input latch is reset again or latching is prevented with register "QuitInputLatch0x" on page 23.

Data type	Values
USINT	See the bit structure.

Bit structure:

Bit	Name	Value	Information
0	InputLatch09	0	Do not latch input 9
		1	Latch input 9
...		...	
7	InputLatch16	0	Do not latch input 16
		1	Latch input 16

4.6.4.3 Acknowledgment - Input latches 1 to 8

Name:
QuitInputLatch01 to QuitInputLatch08

This register is used to reset the input latch by channel.

Data type	Values
USINT	See the bit structure.

Bit structure:

Bit	Name	Value	Information
0	QuitInputLatch01	0	Do not reset input 1
		1	Reset input 1
...		...	
7	QuitInputLatch08	0	Do not reset input 8
		1	Reset input 8

4.6.4.4 Acknowledgment - Input latches 9 to 16

Name:
QuitInputLatch09 to QuitInputLatch16

This register is used to reset the input latch by channel.

Data type	Values
USINT	See the bit structure.

Bit structure:

Bit	Name	Value	Information
0	QuitInputLatch09	0	Do not reset input 9
		1	Reset input 9
...		...	
7	QuitInputLatch16	0	Do not reset input 16
		1	Reset input 16

4.6.5 Event counter / Gate measurement

Name:
Counter01 and Counter02

Depending on the mode, this register contains the counter value or gate time of channel 1 and channel 2.

Data type	Values
UINT	0 to 65535

4.6.6 Reading out the module ID

Name:
asy_ModulID

This register offers the possibility to read the module ID.

Data type	Values
UINT	Module ID

4.6.7 Operating limit status registers

Name:
asy_SupplyStatus

The status of the operating limits can be read out in this register.

Data type	Values
USINT	See the bit structure.

Bit structure:

Bit	Description	Value	Information
0	Input power supply within/outside the warning limits	0	Within the warning limits (18 to 30 V)
		1	Outside the warning limits (<18 V or >30 V)
1	Reserved	0	
2	Output power supply within/outside the warning limits	0	Within the warning limits (18 to 30 V)
		1	Outside the warning limits (<18 V or >30 V)
3 - 7	Reserved	0	

4.6.8 I/O supply voltage

Name:
asy_SupplyInput

This register contains the I/O supply voltage measured by the module.

Data type	Values	Information
USINT	0 to 255	Resolution 1 V

4.6.9 Output supply voltage

Name:
asy_SupplyOutput

This register contains the output supply voltage measured by the module.

Data type	Values	Information
USINT	0 to 255	Resolution 1 V

4.7 Minimum I/O update time

The minimum I/O update time specifies how far the bus cycle can be reduced so that an I/O update is performed in each cycle.

Minimum I/O update time	
Without filtering	150 µs
With filtering	200 µs
Counter operation	250 µs

4.8 Minimum cycle time

The minimum cycle time specifies how far the bus cycle can be reduced without communication errors occurring. It is important to note that very fast cycles reduce the idle time available for handling monitoring, diagnostics and acyclic commands.

Minimum cycle time	
Without filtering	150 µs
With filtering	200 µs
Counter operation	250 µs