FMS Tension Control / Force Sensors

RMGZ200A-Series Compact force sensor for stranding machines with low wire tension

- **Precise measuring results even at high revolutions**
  Special design for rotating applications
- **Quick and reliable mechanical compensation of measured centrifugal force**
  Integrated angle adjustment mechanism
- **Provides for strand tensions from a few Newtons to several kilonewtons**
  Nominal forces from 10 to 200 N (2.25 to 45 lbf.)

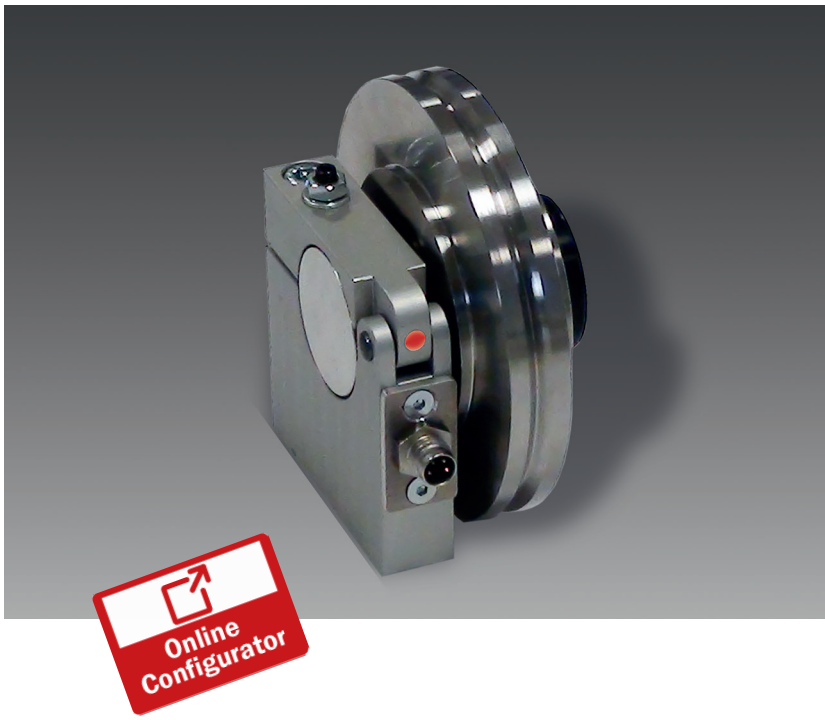

RMGZ200A-Series
Designed to meet the requirements of smaller and higher-revolution planetary and tubular type stranders, the force sensor of the RMGZ200-Series is also applicable to bunchers and twisters. The innovative dual flexion beam construction provides the foundation for accurate and reproducible measurements in difficult operating conditions. Once the load rating and housing configuration are properly specified for the application, the sensor is easily mounted to the machine with two fasteners. A single cable (power in/signal out) is connected at the sensor housing. Standard pulleys are not supplied by FMS.

Functional description
The RMGZ200-Series force measuring sensor combines the bearing seat of the pulley and the force sensor within the same housing, thus minimizing the required installation space. The substantial overload protection translates to eliminated/minimized calibration issues due to machine upset conditions. The design includes dual bending beams, and this serves to eliminate the load specific influence of torque. The movement of the bending beams, which is proportional to the applied force, is detected by strain gauges arranged in a full bridge circuit and then converted into an electrical signal. This simple measurement principle delivers precise results even with low material tension and small web wrap angles. The Red Point, as located on the sensor body, should be aligned with the direction of the resultant force due to material tension.

RMGZ200A-Series : Dimensions

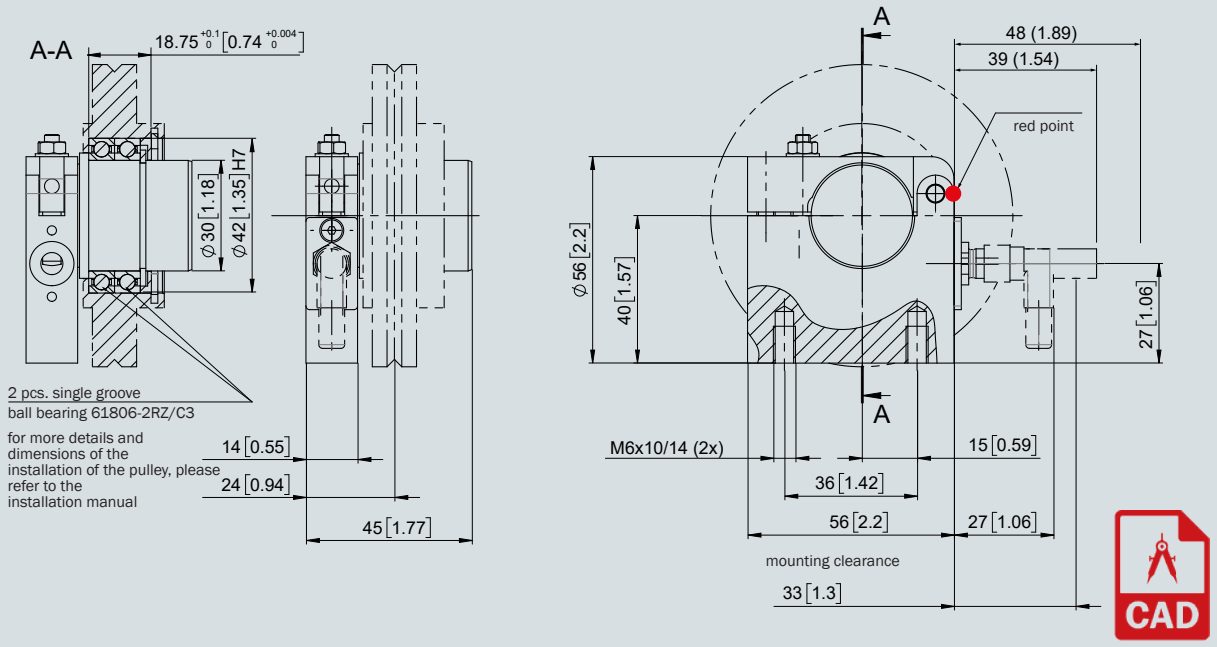

RMGZ200A-Series : Options

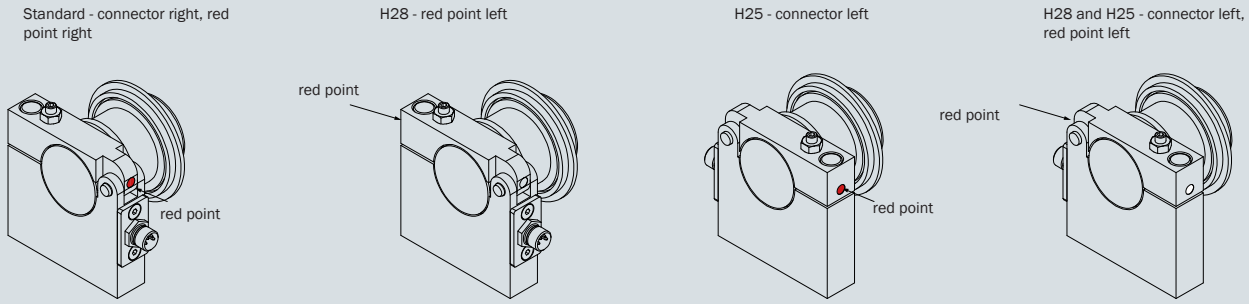

RMGZ200A-Series : Nominal forces, Deflection, Weight

Size	**Nominal force**		**Deflection**		**Weight**	
Type	N (.lbf)		mm (.in)		kg (.lbs)	
RMGZ200A	10	(2.25)	0.16	(0.0063)	0.43	(0.95)
	20	(4.50)	0.13	(0.0051)	0.43	(0.95)
	50	(11.24)	0.15	(0.0059)	0.43	(0.95)
	100	(22.48)	0.16	(0.0063)	0.43	(0.95)
	200	(44.96)	0.12	(0.0047)	0.43	(0.95)

RMGZ200A-Series : Technical data	
Sensitivity	1.8 mV/ V
Tolerance of sensitivity	< ± 0.2 %
Accuracy class	± 0.5 % (F_{Nom})
Temperature coefficient	± 0.1 % / 10 K
Temperature range	– 10 °C to +60 °C (14 F to 140 F)
Input resistance	350 Ω
Power supply	1 to 10 VDC
Overload protection	10-times nominal force F_{Nom}
Material main body	high-strength aluminum
Protection class	IP 42
Electrical connection	Male connector M8, 4-pole
Repeatability error	0.05 %
Measuring range	30 : 1

RMGZ200A-Series : Order code

RMGZ2 00A .20 .H25.H28

- Options
- Nominal force rating in N
- Size, design revision A
- Series

RMGZ200A-Series : Options	
H25	connector offset 180°
H28	red point offset 180°

RMGZ200A-Series : Scope of supply

● force sensor ● 2 pcs. clip rings ● thin-section bearing ● distance ring

RMGZ200A-Series : Accessories

● connecting cable, 10 m (32.8 ft.) with right angle M8 connector ● connecting cable, 5 m (16.4 ft.) with right angle M8 connector ● connecting cable, 2 m (6.4 ft.) with right angle M8 connector ● connecting cable, 10 m (32.8 ft.) with straight M8 connector ● connecting cable, 5 m (16.4 ft.) with straight M8 connector ● connecting cable, 2 m (6.4 ft.) with straight M8 connector

RMGZ200A-Series : Typical application



Other products : Tension Control

Measuring Amplifiers



Tension Controllers



Intrinsically Safe Barrier



About us

FMS Force Measuring Systems AG is the market leader in the field of web tension measurement, control and specialist for web guiding solutions. For the wire industry we are the only manufacturer offering a complete range of technologies for force measurement, data processing and radio transmission of signals.

Our in house developed products are used in the manufacturing industry, converting, metals, paper, textiles, as well as in cable and wire rope production. Utilising the latest technology, high quality components and a firm understanding of customer applications, FMS supports customers worldwide in the effort to maximize the productivity of their machines. Since 1993, our highly qualified employees have been creating high-end solutions for machine builders and plant operators. As an owner-managed company, we pride ourselves on being personal and approachable with the ability to make decisive moves fast.

World Headquarters: FMS Force Measuring Systems AG
Aspstrasse 6 • 8154 Oberglatt (Switzerland) • Phone + 41 44 852 80 80 • Fax + 41 44 850 60 06
info@fms-technology.com • **www.fms-technology.com**

All data have been prepared and checked carefully. However, we cannot assume liability for any errors or incompleteness. Subject to modifications serving progress. /003