Screw pumps PWO

For cooling lubricants with low viscosity and minimum
lubricating properties (minimum oil: 4%) - lube oils, mineral and synthetic types

Admissible delivery pressure (continuous) = see Table 1

Main fied of application

Machine tools high pressure cooling systems

ATEX-Compliance

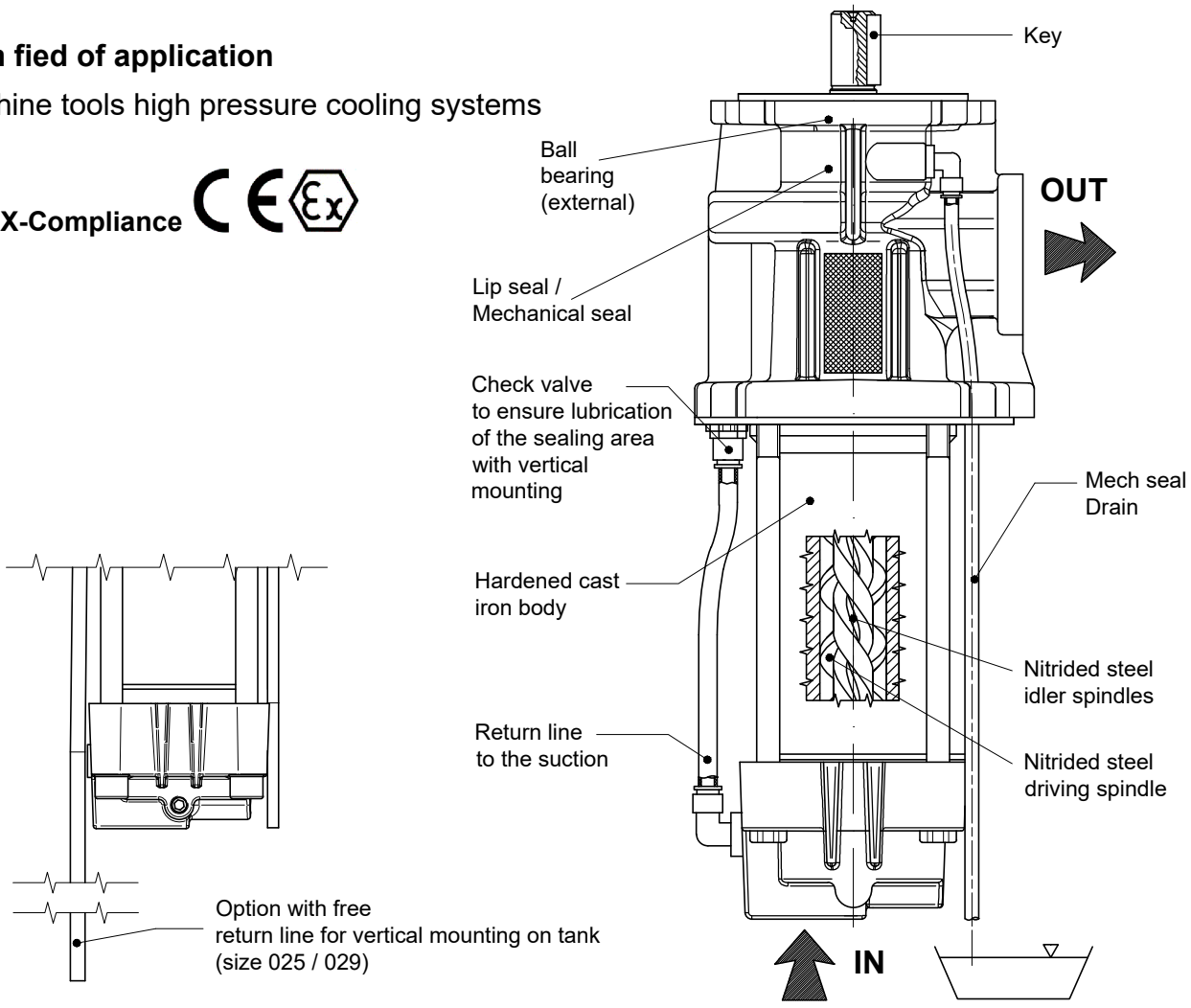

Functional characteristics standard version

Delivery flow	up to 800 l/min (up to 211 USGPM)
Admissible delivery pressure *	up to 150 bar (2175,5 psi) - Table 1 *
Admissible suction pressure	-0,5 to 5 bar (-7,3 to 72,5 psi) (with mechanical seal) 0 to 1 bar (0 to 14,5 psi) (with lip seal) For different values contact SEIM
Kinematic viscosity	emulsion (min:4% oil) and cutting oils: 1 to 20 cSt contact SEIM for different viscosity or type of fluids
Admissible temperature	0 to 100 °C (32 to 212 °F) For different values contact SEIM
Driving speed	2900 to 3500 rpm (contact SEIM for use with VFD)
Average noise level	60 - 75 dB(A) at 2900 rpm according to pump dimension
Raccomended fluid cleanliness level in the system	see Appendix - Table 2
Direction of rotation	clockwise, as seen from the driving side

* Reduced pressure limits apply due to fluid viscosity and driving speed.
Consult the performance charts for the individual pump size.
For different functional characteristics, please contact our sales department.

Screw pumps PWO

For cooling lubricants with low viscosity and minimum
lubricating properties (minimum oil: 4%) - lube oils, mineral and synthetic types

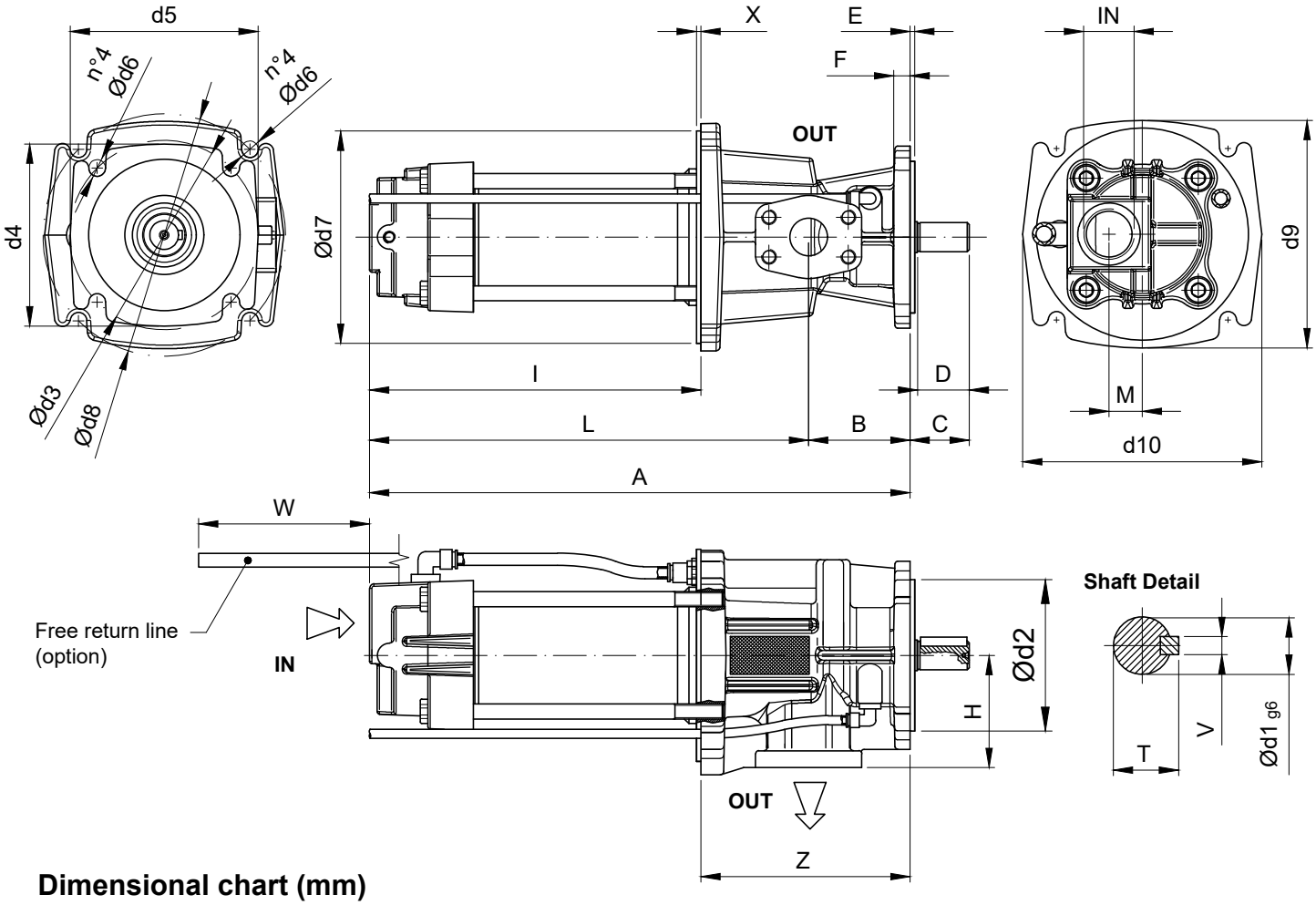

Dimensional chart (mm)

MODEL	A	B	C	D	E	F	H	I	L	M	IN	OUT	T	V	d1	d2	d3	d4	d5	d6	d7	X	d8	d9	d10	Z	W
PWO025	357	67	39	34	3	13	74	219	290	22	1" GAS	1" SAE ¾ GAS	21,5	6	19	100	125	120	124	12	140	9	160	150	158	138	191
PWO029	357	67	39	34	3	13	74	219	290	22	1" GAS	1" SAE ¾ GAS	21,5	6	19	100	125	120	124	12	140	9	160	150	158	138	192
PWO032	401	67	39	34	3	13	74	263	337	22	1" GAS	1" SAE ¾ GAS	21,5	6	19	100	125	120	124	12	140	9	160	150	158	138	-
PWO040	483.5	102	49	40	7	15	81	310.5	381.5	42	1 1/2" GAS	1 1/2" SAE	24.5	6	22	125	160	154	158	14	180	10	215	203	211	173	-
PWO045	534	102	49	40	7	15	81	362	433	42	1 1/2" GAS	1 1/2" SAE	27	8	24	125	160	154	158	14	180	10	215	203	211	173	-
PWO055	613	161.5	64	55	8	15	100	380	451	72	3" GAS	2" SAE	35	10	32	125	160	173	175	14	235	10	265	249	257	232.5	-
	624							391	462		3" SAE																
PWO060	667	161.5	64	55	8	15	100	434	505	72	3" GAS	2" SAE	35	10	32	125	160	173	175	14	235	10	265	249	257	232.5	-
	679							446	517		3" SAE																
PWO072	**Dimensions on next page**																										
PWO083	**Dimensions on next page**																										

SEIM srl
Via A. Volta 17
20047 Cusago (MI) ITALY
Tel. (+39) 02.90.39.21.1
Fax. (+39) 02.90.39.21.41
e-mail: seim@seim.it

www.*seim.it*

SEIM reserves the right to introduce dimensional changes or variation to the products of this technical data

Screw pumps PWO

For cooling lubricants with low viscosity and minimum
lubricating properties (minimum oil: 4%) - lube oils, mineral and synthetic types

Dimensional lay out sizes 072 / 083 [mm]

Model PWO 072

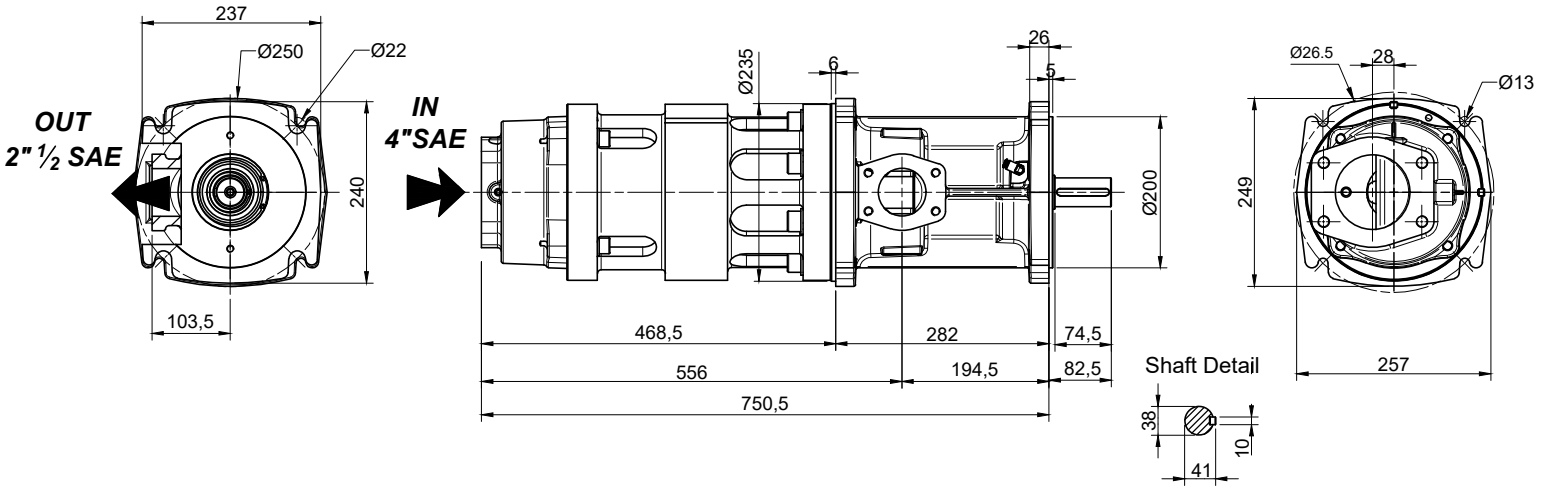

Model PWO 083

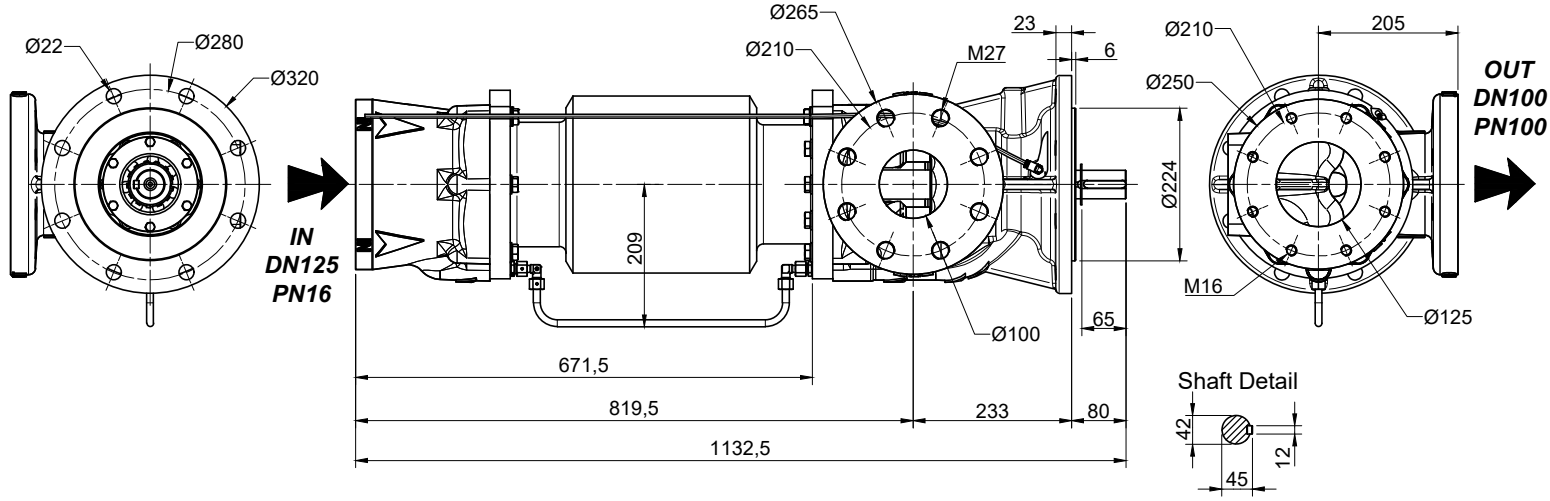

SEIM srl
Via A. Volta 17
20047 Cusago (MI) ITALY
Tel. (+39) 02.90.39.21.1
Fax. (+39) 02.90.39.21.41
e-mail: seim@seim.it

www.*seim.it*

SEIM reserves the right to introduce dimensional changes or variation to the products of this technical data

Screw pumps PWO

For cooling lubricants with low viscosity and minimum
lubricating properties (minimum oil: 4%) - lube oils, mineral and synthetic types
vegetables oils, biodiesel

SEIM
SCREW PUMPS

Appendix

	1450 - 1750 rpm		2900 - 3500 rpm	
	1 cSt	20 cSt	1 cSt	20 cSt
PWO025	Contattare SEIM		150 bar	
PWO029	Contattare SEIM		150 bar	
PWO032	Contattare SEIM		150 bar	
PWO040	Contattare SEIM		120 bar	
PWO045	Contattare SEIM		120 bar	
PWO055	Contattare SEIM		120 bar	
PWO060	Contattare SEIM		120 bar	
PWO072	Contattare SEIM		100 bar	
PWO083	Contattare SEIM		100 bar	

Table 1 - Max delivery pressure Vs Viscosity / Rpm

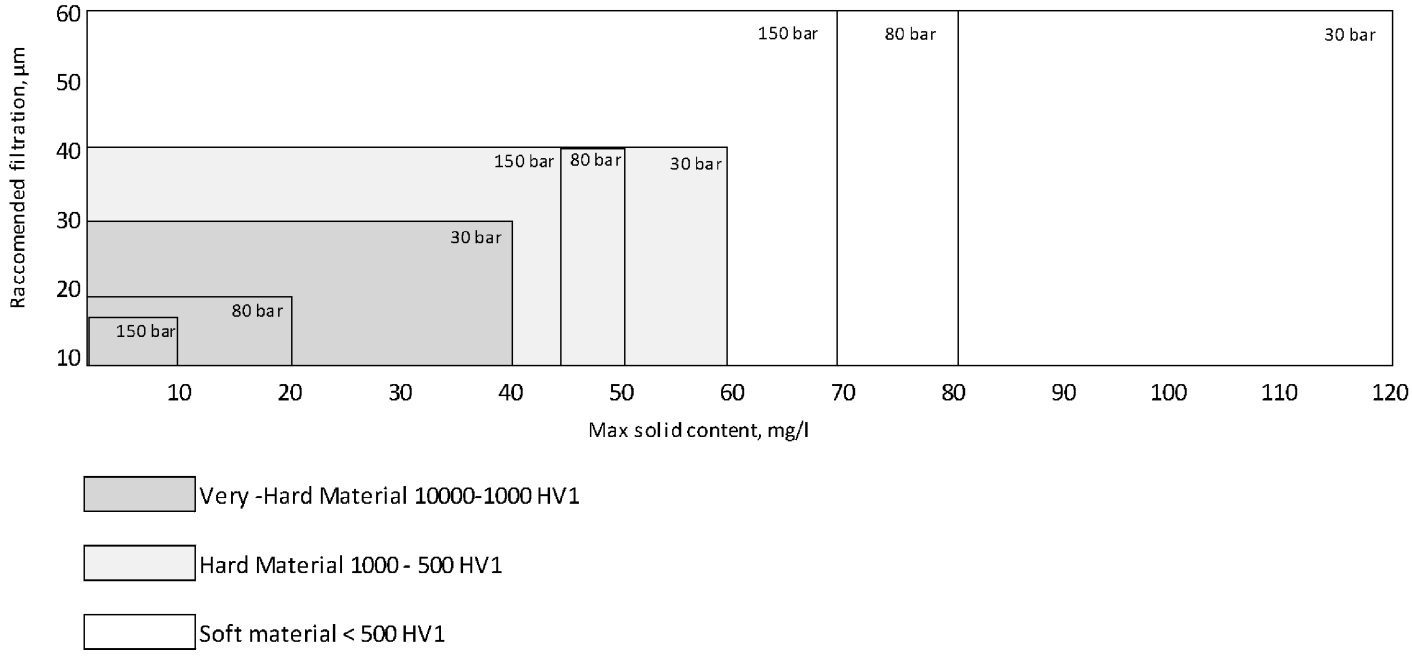

Table 2

SEIM srl
Via A. Volta 17
20047 Cusago (MI) ITALY
Tel. (+39) 02.90.39.21.1
Fax. (+39) 02.90.39.21.41
e-mail: seim@seim.it

www.*seim.it*

SEIM reserves the right to introduce dimensional changes or variation to the products of this technical data