Installation equipment

Calotte
64 x 64 mm
8603A0740-11-0 Art. No. 155940



MY R. STAHL **8603A**

Technical Data

Explosion Protection	
Area of application	European Union (ATEX) IECEx Canada USA
Application range (zones)	1, 2, 21, 22
IECEx gas certificate	IECEx PTB 06.0083 U
IECEx gas explosion protection	Ex eb IIC Gb
IECEx dust certificate	IECEx PTB 06.0083 U
IECEx dust explosion protection	Ex tb IIIC Db
ATEX gas certificate	PTB 00 ATEX 3106 U
ATEX gas explosion protection	Ⓔx II 2 G Ex eb IIC Gb
ATEX dust certificate	PTB 00 ATEX 3106 U
ATEX dust explosion protection	Ⓔx II 2 D Ex tb IIIC Db
Certificate ULus	E177642V2S2
Marking ULus	Class I, Zone 1, AEx eb IIC Gb Zone 21, AEx tb IIIC Db
Certificate cUL	E177642V2S2
Marking cUL	Class I, Zone 1, Ex eb IIC Gb Zone 21, Ex tb IIIC Db
Certificates	ATEX (PTB), Brazil (ULB), Canada / USA (UL), Canada (UL), China (CQST), IECEx (PTB)
Notes	Product label may vary. Series devices are labelled with ATEX and IECEx.
Ambient Conditions	
Ambient temperature	-60 °C ... 76 °C
Ambient temperature	-76 °F ... 169 °F
Storage temperature	-60 °C ... 76 °C
Storage temperature	-76 °F ... 169 °F
Degree of pollution	3
Mechanical Data	
Degree of protection (IP)	IP66
Note on degree of protection	According to IEC/EN 60529

Installation equipment

Calotte

64 x 64 mm

8603A0740-11-0 Art. No. 155940

Mechanical Data	
Enclosure type (UL50 & UL50E)	3, 4, 4X
Material	Glass polyamide
Silicone-free	Yes
Width	64 mm
Width, inches	2.52 in
Height	64 mm
Height in inches	2.52 in
Depth	12 mm
Depth in inches	0.47 in
Impact strength (IEC 60079)	7 J
Installation location	Outside
Seal	EPDM
Calotte size	64 x 64 mm
Calotte size, inch	2.52 x 2.52"
Openings	42 x 46 mm
Openings, inch	1.65 x 1.81"
Packaging unit	1
Weight	70 g
Weight	0.15 lb
Mounting / Installation	
Tightening torque	1.2 N · m
Tightening torque lbf in	10.62 lbf in

Dimensional Drawings (All Dimensions in mm [inches]) – Subject to Alterations

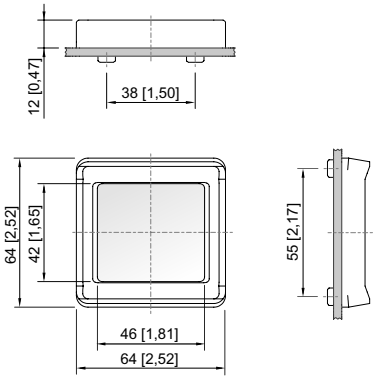

Calotte size: 64 x 64 mm

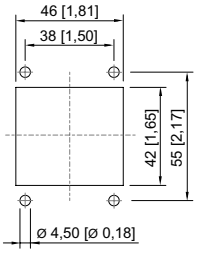

Calotte size: 64 x 64 mm

We reserve the right to make alterations to the technical data, dimensions, weights, designs and products available without notice. The illustrations cannot be considered binding.