RegalRexnord™



INDUSTRIAL BRAKING SOLUTIONS

NORTH AMERICA



Stromag™

COMPLETE BRAKING SOLUTIONS

Stromag supplies SIME™ Brakes solutions for various industrial applications to ensure highest performance and safety in motion.

- Steel works:
  cranes, hoists and winches
- Lift Bridges, dams, doors and movable floors
- Offshore tower cranes
- Mining and cement applications, material handling conveyors
- Nuclear cranes

DRUM BRAKES

SAB RANGE



Braking torque 55 - 8800 lb.-ft.
Drums Ø6" to 30"

Main characteristics:

- Standard AISE N.11
- Scale for torque adjustment
- Automatic lining wear compensation
- Brake shoe auto-aligning device
- Brake lever synchronization
- Self-lubricated bushings
- Galvanized steel spindles and hinges

Options:

- High temperature - Low temperature
- Opening switch - Lining wear indicators
- Steel works - Special voltages
- Manual release lever with or without stop

FEM-US RANGE



Braking torque 50 - 9000 lb.-ft.
Discs Ø6" to 30"

Main characteristics:

- Standard AISE N.11
- DC series or shunt coils available, or coils for use with rectifier AC power
- Steel base with laminated steel armatures
- Self-lubricant bushings at main hinge points
- Brake Shoe auto-aligning device
- Aluminum brake shoes with organic linings

Options:

- Limit switch release control
- Automatic wear compensator
- Limit switch wear control
- Manual release lever with or without stop

DRUMS & COUPLINGS



Series SVT & PB-C
Drums Ø160 to 710 mm

As a complement to its drum brakes, Stromag proposes two types of drum couplings to offer a complete braking system:

- **SVT** drum couplings
- **PB** drums & **PB-C** drum couplings

Main characteristics:

- Standard DIN 15435
- Flanged hub fitted with rubber bushes
- Uniform distribution of loads, even in case of misalignment
- Reduction of resonance effects at critical velocity

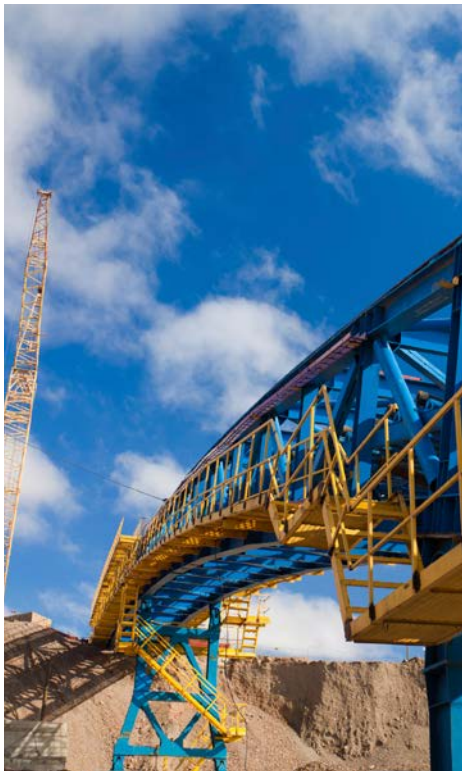



DISC BRAKES

TDXB RANGE



Braking torque 900 - 28200 N.m
Discs Ø315 to 995 mm

Main characteristics:

- Types: TDXB-I and TDXB-II
- PT Thrusters
- Automatic lining wear compensation
- Self-centering / • Opening sensor
- Low maintenance Teflon bushes
- Manual release lever
- Symmetrical design

Options:

- Sensors: Closing / Thruster limit stroke
- SIDHT: high temperature Steel Works
- Custom color

SH RANGE



Braking torque 230- 458000 N.m
Discs Ø300 to 3000 mm

Main characteristics:

- Spring application - Hydraulic release
- Opening proving switch
- Lining wear indicators
- SHS: caliper mounted on a support
- SHC: SH with Hydraulic Power pack
- Association with disc thicknesses: 12.7 15 - 20 - 30 or 42 mm

Options:

- Progressive braking system
- Offshore protection
- Lining temperature sensor
- High temperature, iron and steel conditions

DISCS & COUPLINGS

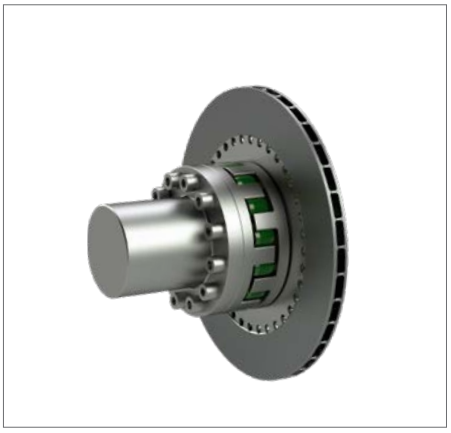

3 types of discs couplings
Discs Ø175 to 995 mm

As a complement to its disc brakes, Stromag proposes three types of disc couplings to offer a complete braking system solution:

- **MTDF** coupling is a Double Engagement Gear Coupling.
- **Stromag Periflex™** Shaft Coupling is a Highly-Flexible rubber / fabric tyre coupling.
- **SVK-SDK** Coupling (picture above) is a Highly-Flexible coupling equipped with a cam ring and a elastomer element.

SAB THRUSTER DRUM BRAKES

SAB Thruster Drum Brakes are associated with different thrusters and springs for a large range of braking forces.

Protected against adverse environmental effects in their respective applications, they have precision tuned safety functions.

They permit easy adjustment of the braking torque with an accurate scale control following the demands of the AISE No. 11.



Braking Torque (lb.ft.)

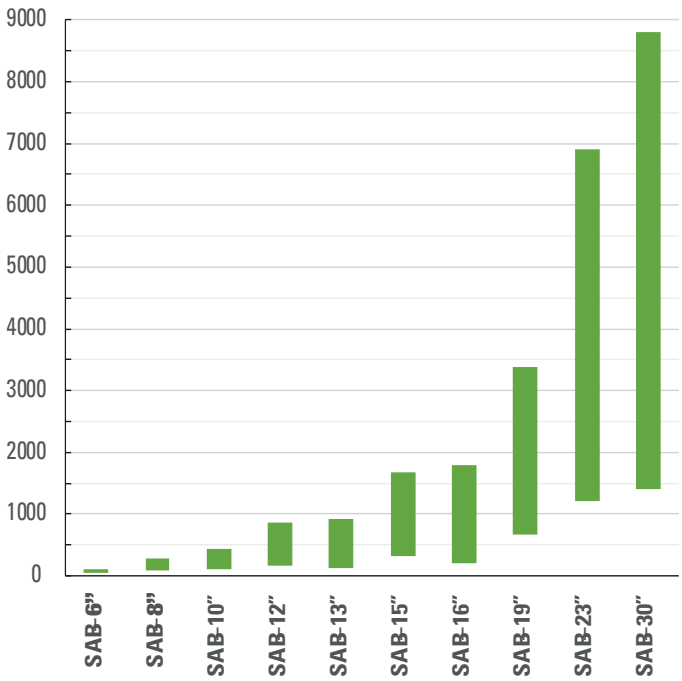

Standard voltage	230 / 460VAC 60Hz
Weight	From 70 to 980 lb
H x W x D	16.5 x 17 x 6.3 inch to 44.5 x 68 x 9.45 inch
Nominal Braking Torque	55 to 8800 lb.ft
Drums	6 to 30 inch

SAB Thruster Drum Brakes offer many technical advantages and options:

- an automatic system of lining wear compensation
- a torque scale for easy adjustment
- an opening proving switch (BRLS)
- a manual release lever (option HRL)
- full lining wear indicators (option LWI)
- special paint or protection level (SPA & SPR)

PT thrusters offer also a large range of options to meet requirements of every applications.

SPA SPECIAL PAINT
SPR PROTECTION LEVEL C4
options

SW-SV-AV-DV
Thruster options
Steel Works - Special Voltage
Thruster delay: Ascent Valve
or Descent Valve

HRL HAND RELEASE
LEVER option

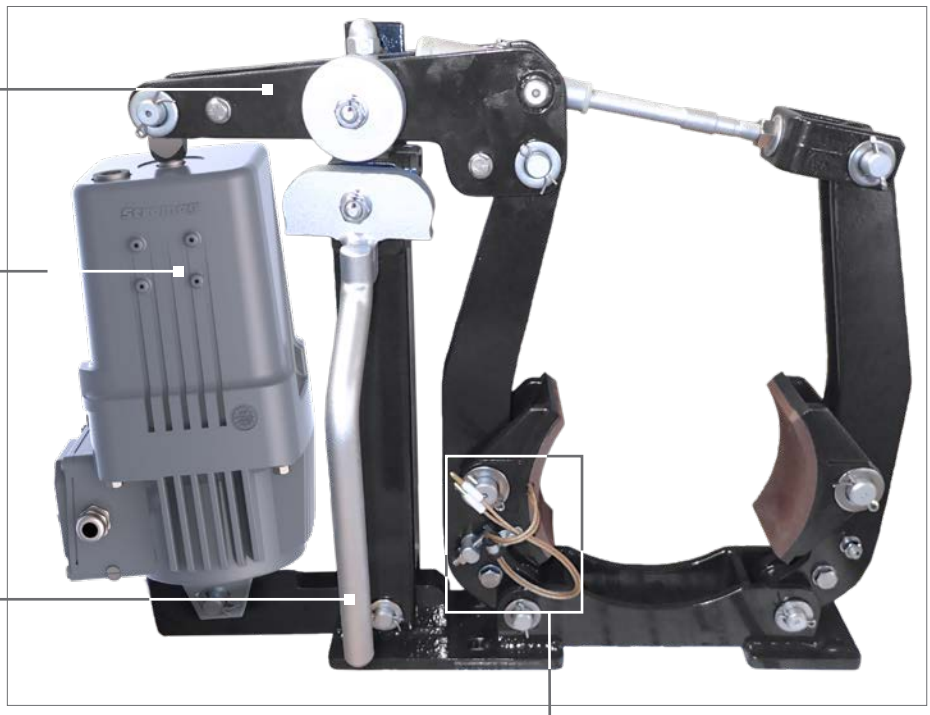

AUTOMATIC LINING
WEAR COMPENSATION
SYSTEM (standard)



LWI FULL LINING
WEAR INDICATORS
option

BRLS OPENING SWITCH
option





TORQUE SCALE
(standard)

TDXB THRUSTER DISC BRAKES

TDXB-I and TDXB-II Thruster Disc Brakes are equipped with different thrusters and springs for a large range of braking forces.

These symmetrical brakes are designed for easy installation and maintenance. Their robust construction and simple operation bring high reliability.



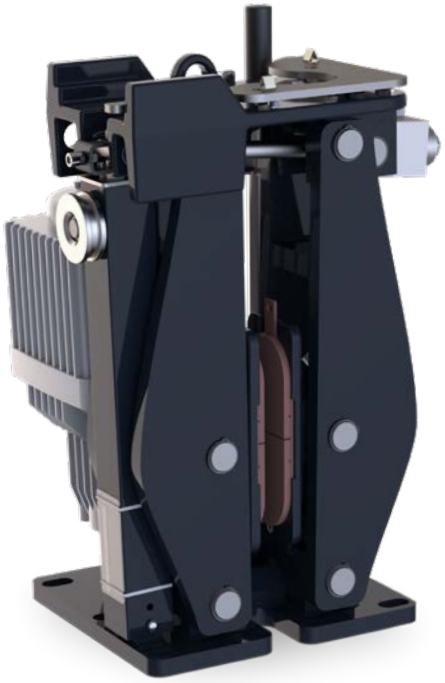

TDXB-I

Braking Torque (N.m)
(3 types of spring)

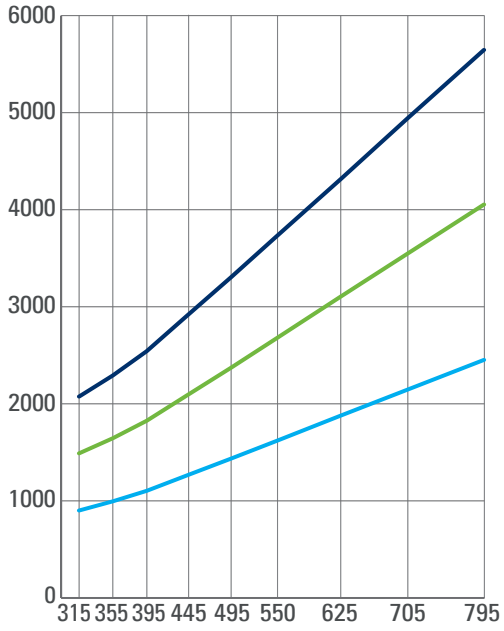

TDXB-II

Braking Torque (N.m)
(4 types of spring)

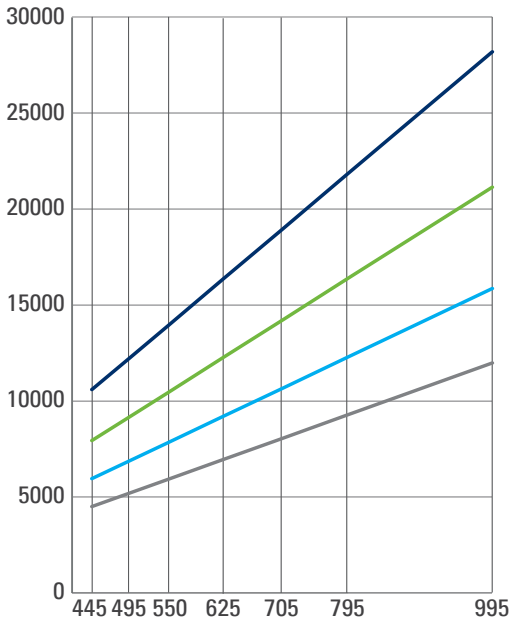

TDXB-I and TDXB-II Thruster Disc Brakes offer in standard multiple technical advantages:

- automatic system of lining wear compensation
- lining full wear indicators
- a self-centering system
- a manual release lever
- a proximity switch for opening monitoring
- low maintenance Teflon bushes

They are proposed with PT thrusters. A large range of options allow to meet requirements of every applications.

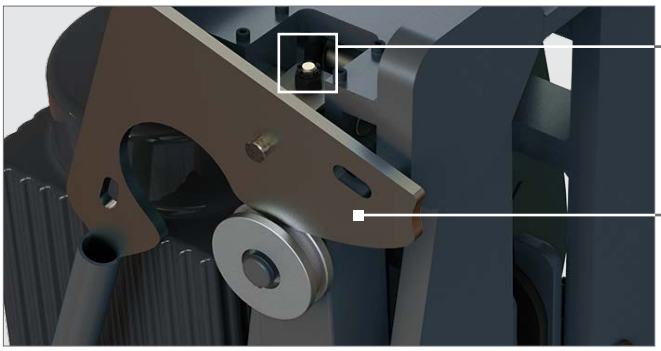

CLAMPING FORCE SETTING

Actuation on the torque setting nut enables to modify the spring compression to the requested torque value.

MANUAL RELEASE LEVER

The manual release lever enables to:

- open manually the brake by canceling the braking force
- lock the brake in open position

It is mounted on the release rod, actuated and locked in position on the roller.

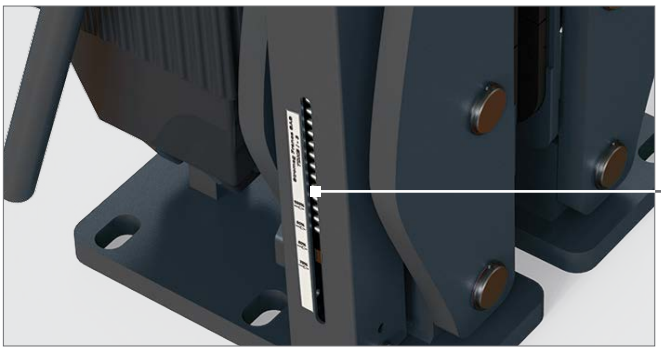

SPRING WITH TORQUE SCALE

PROXIMITY SWITCHES

Opening switch
Options: Closing and Stroke switches.

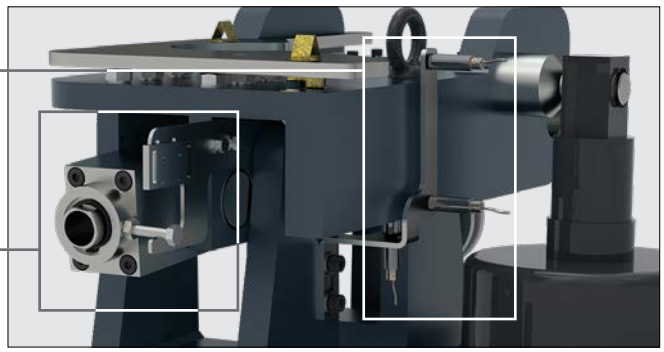

AUTOMATIC LINING WEAR COMPENSATION SYSTEM

This system adjusts the opening gap to compensate the lining wear.
Thus, it ensures a constant braking force throughout the life of the lining pads.

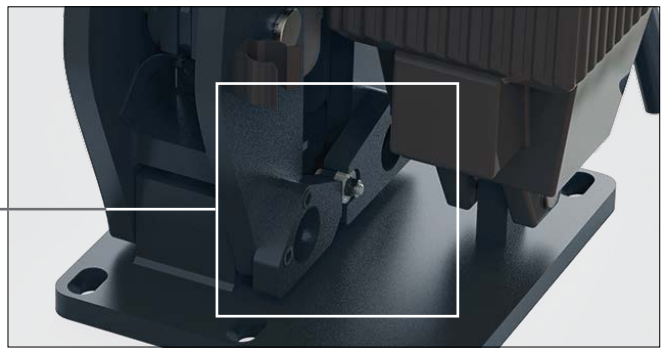

CENTERING SYSTEM

This system balances the lining pads gap on each side of the disc during brake operation.

EMERGENCY HYDRAULIC BRAKES

CALIPERS



	BRAKING TORQUES (N.m) Ø Disc (mm)
SH5	15 000 Ø750 — 74 000 Ø3000
SH9A	28 000 Ø750 — 141 000 Ø3000
SH15	43 000 Ø750 — 212 000 Ø3000
SH18B	51 000 Ø750 — 254 000 Ø3000
SH25	62 000 Ø750 — 343 000 Ø3000
SH32	82 000 Ø750 — 455 000 Ø3000



HYDRAULIC POWER PACKS - SHPU

SHPU Hydraulic Power Packs are designed to be associated with all hydraulic brakes types, whatever their number necessary for the installation, whatever the distance that separates the braking system from the power unit. Many options are available to meet all braking configurations (manual lowering, delayed closing, controlled braking torque, Soft Braking, MOPS, electrical units, SIMAN, ...).



SAFETY INTELLIGENT MANAGER - SIMAN

SIMAN is an intelligent system for monitoring and management of the good operation of Hydraulic Power Packs whatever their functionalities.
It drives the HPP motor pump and the solenoid-valves. To ensure safety, it controls the good operation of the solenoid-valves and the oil return to the tank. For optimal operation, it monitors the HPP parameters.
SIMAN CM communication module allows connection to a Ethernet network (ModBus TCP server - WEB interface).

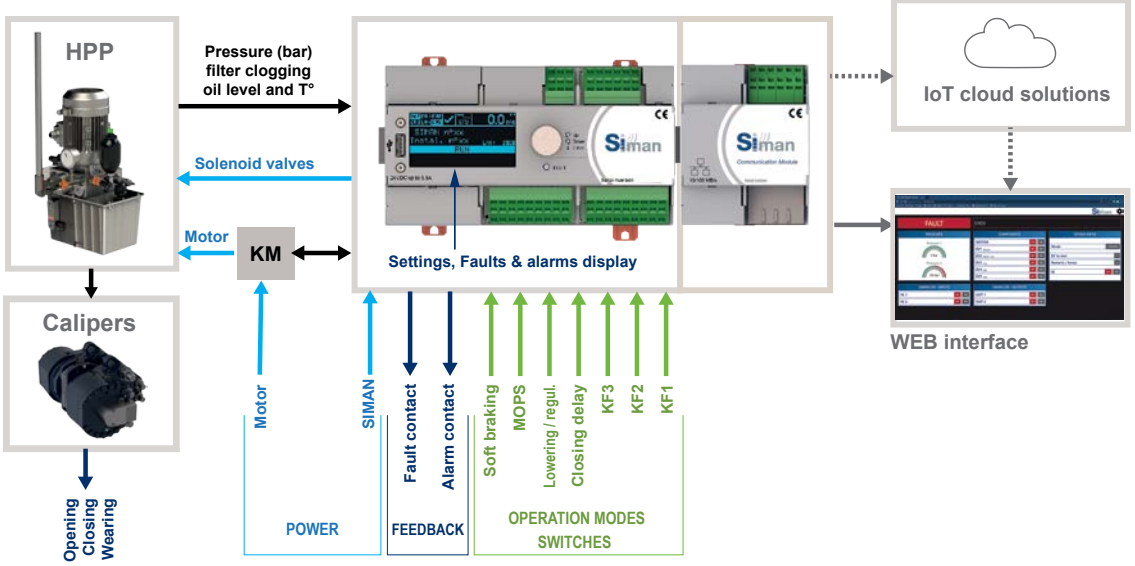

SIDEOS V4 SPEED MONITORING SYSTEM

The SIDEOS V4 unit is a configurable monitoring system of the kinematic chain: it is designed to secure the kinematic chain of a lifting and handling equipment.

- In case of Speed or System Fault, it pilots the opening of the braking control circuit which is downstream of the control circuits.
- It stops the use of the lifting movement of the handling equipment, if it is unable to perform its function.
- It combines Stromag braking systems with their outstanding limit switch technology.
- It allows to obtain a secured monitoring system of the speed of: **Category 4, Performance Level PL= e according to the standard ISO/IEC 13849-1**
- It is designed according to the **CRT16 60.C.016 EDF.**



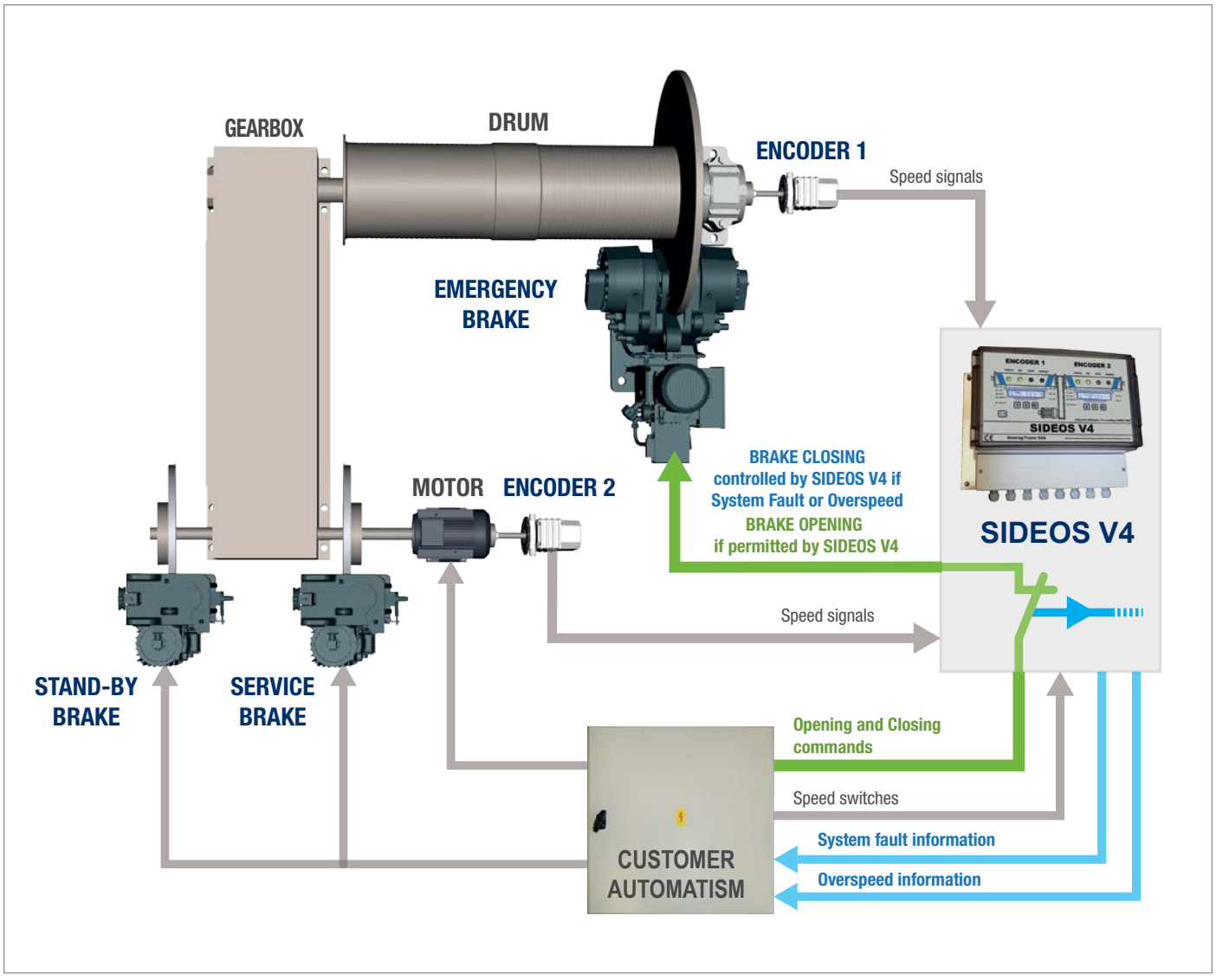

SOLUTION FOR EVERY APPLICATION

Whatever your requirement for safety, performance and reliability is, Stromag offers standard or fully customized braking systems solutions.
Here are two examples of Stromag braking systems:

OUTSTANDING SHIP LIFT

Stromag was chosen to supply accurate braking systems for the ship lifts of the Silin, Shatuo and Goupitan hydroelectric stations on Wujiang river in China.
For each project, a huge braking system, designed to secure hoisting of the ship reservoirs (weight up to 3300 tons), to a maximum height of 79 meters, includes:

- 200 to 240 hydraulic emergency brakes type SH32 (braking force: 334 kN),
- 8 to 20 hydraulic service brakes type SHD5,
- 2 to 5 custom hydraulic power packs with electrical control and monitoring unit.

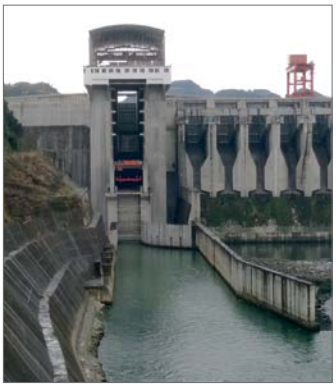







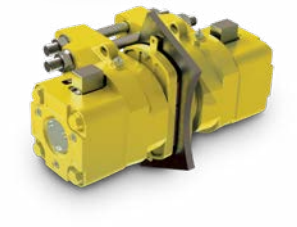

HEAVY LIFT OFFSHORE CRANES

Modular Stromag™ SHD1 braking systems equip, for several leading global OEM, large mass cranes installed on offshore construction vessels which provide heavy lifting capability to support surface or sub-sea asset installation.
These braking systems offer an economical braking solutions: they are factory-tested and designed to be mounted directly on the rear of 400 kW motors and above.
With years of extensive offshore application experience, Stromag can provide braking systems that meet various certifications including LR, ABS, and DNV-GL.











CONTROL & MONITORING SYSTEMS

Stromag can supply a complete braking solution for smooth, controlled and regulated braking, under all load conditions, for specific applications.

Port crane braking systems require a proportional application of the brake torque. Therefore Stromag developed and supplied to various harbor crane OEM and End-User a unique system consisting of:

- 2 thruster brakes type SAB mounted on the rotation shaft of the drivers cabin of the port crane,
- 1 potentiometric control foot-pedal, in addition to the ON/OFF control of the brakes,
- 1 converter unit which converts the voltage variation of the potentiometric foot-pedal into a frequency variation: the braking force is applied smoothly and progressively to cancel the inertia.

For a proportional braking controlled by the customer PLC, the foot-pedal can be replaced by the CRD module.

The required rate of deceleration is set on the CRD module. In this way, the equipment deceleration is regulated by the control of the brakes torque, through the converter unit, accordingly to that rate. At the same time, speed can be monitored by the SIDEOS One module.

PROPORTIONAL BRAKING CONTROL

Manual control

Foot-pedal



or

Automatic control

SIDEOS One
+
CRD module



CONVERTER UNIT



THRUSTER BRAKE(S)

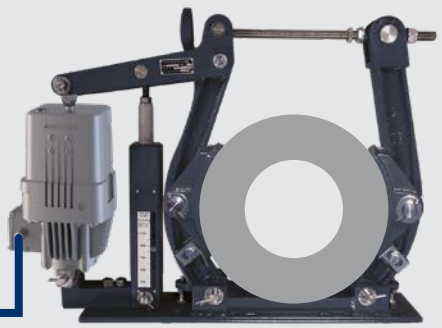

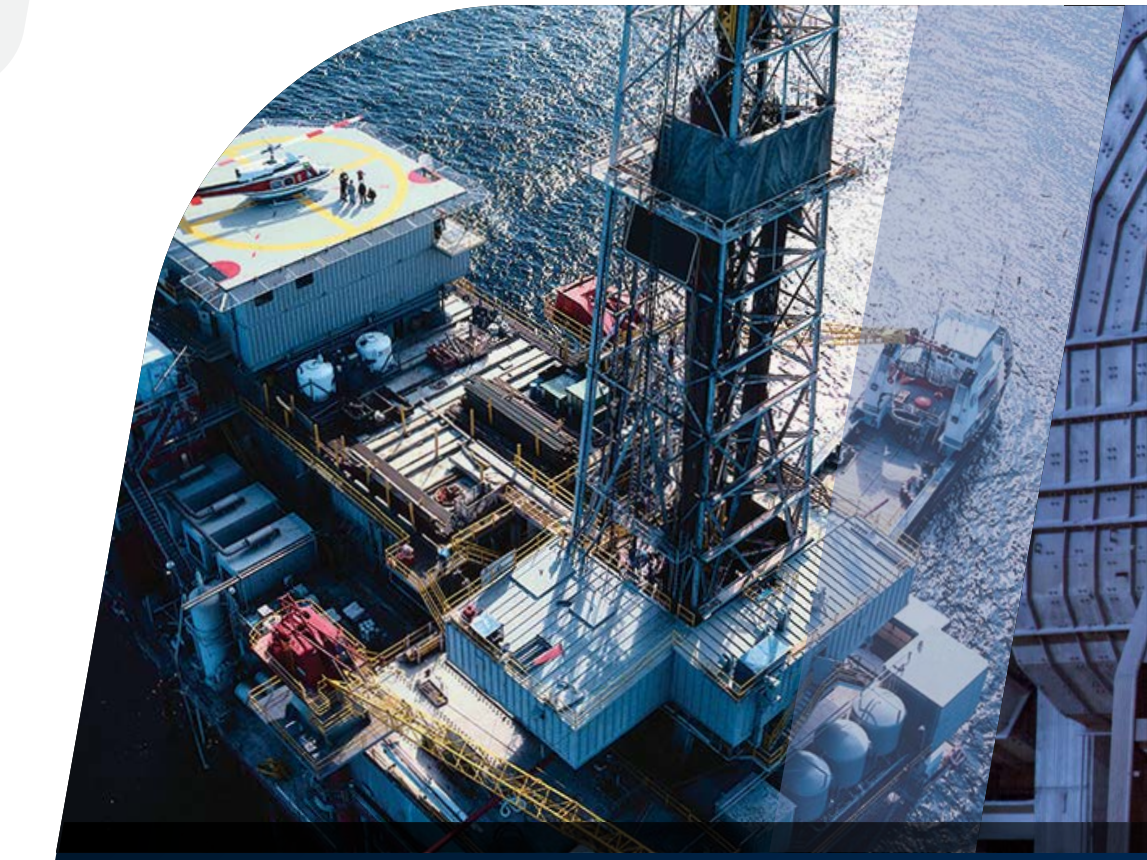

Stromag™

Regal Rexnord™

stromag.com

Stromag France SAS
Avenue de l'Europe
18150 La Guerche sur L'Aubois - France
+33 (0)2 48 80 72 72

regalrexnord.com

The proper selection and application of products and components, including assuring that the product is safe for its intended use, are the responsibility of the customer. To view our Application Considerations, please visit https://www.regalrexnord.com/Application-Considerations.

To view our Standard Terms and Conditions of Sale, please visit https://www.regalrexnord.com/Terms-and-Conditions-of-Sale.

"Regal Rexnord" is not indicative of legal entity. Refer to product purchase documentation for the applicable legal entity.

Regal Rexnord and Stromag are trademarks of Regal Rexnord Corporation or one of its affiliated companies.

© 2021, 2025 Regal Rexnord Corporation, All Rights Reserved. MCB-P-8787-SG-EN-A4 04/25